US 20090096763A1

(19) United States

(12) Patent Application Publication

Hinata

(10) Pub. No.: US 2009/0096763 A1

(43) Pub. Date: Apr. 16, 2009

(54) TOUCH PANEL, DISPLAY DEVICE WITH INPUT FUNCTION, AND ELECTRONIC APPARATUS

(75) Inventor: **Shoji Hinata**, Matsumoto (JP)

Correspondence Address:
HARNESS, DICKEY & PIERCE, P.L.C.
P.O. BOX 828
BLOOMFIELD HILLS, MI 48303 (US)

(73) Assignee: **Epson Imaging Devices Corporation**, Azumino-shi (JP)

(21) Appl. No.: **12/193,809**

(22) Filed: **Aug. 19, 2008**

(30) **Foreign Application Priority Data**

Oct. 16, 2007 (JP) 2007-268677
Jun. 2, 2008 (JP) 2008-144366

Publication Classification

(51) **Int. Cl.**
G06F 3/044 (2006.01)

(52) **U.S. Cl.** **345/174**

(57) **ABSTRACT**

A touch panel includes: first and second substrates each having a first surface and a second surface, the second substrate being arranged on an input operation side of the first substrate; a first electrode that is formed on the first surface of the first substrate; a second electrode that is formed on the first surface of the second substrate; a resistive film type input area in which the first electrode of the first substrate and the second electrode of the second substrate face each other; and a capacitance type input area in which third electrodes are formed on at least one of the first substrate and the second substrate. The resistive film type input area and the capacitance type input area are separated from each other in plan view.

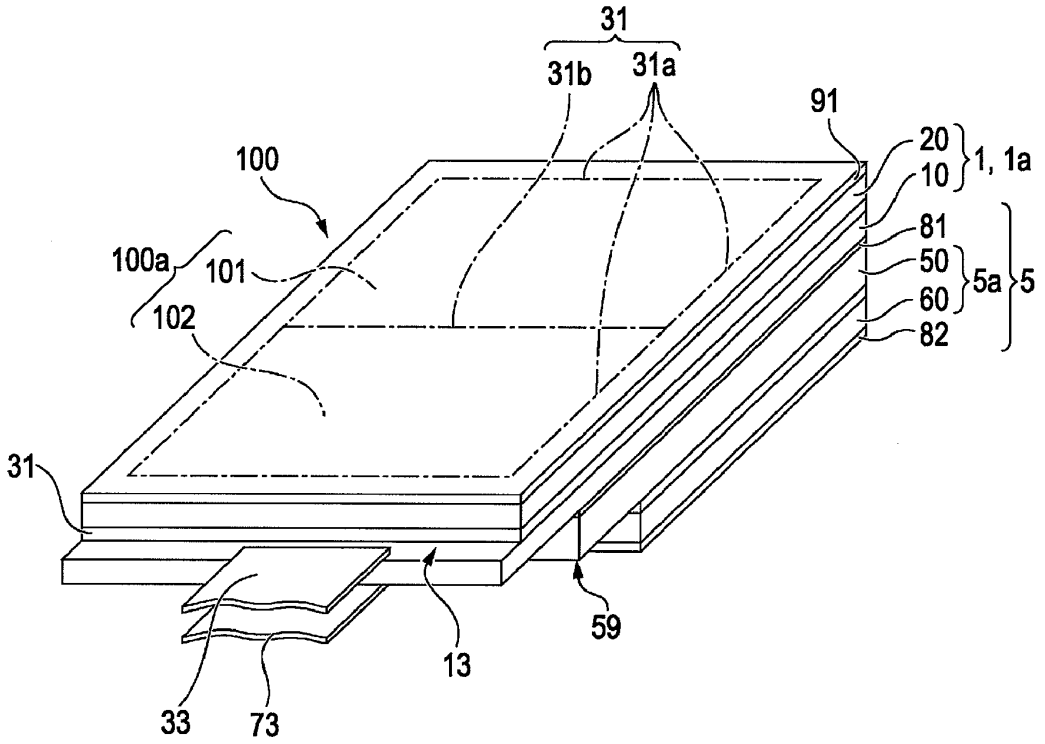

FIG. 1

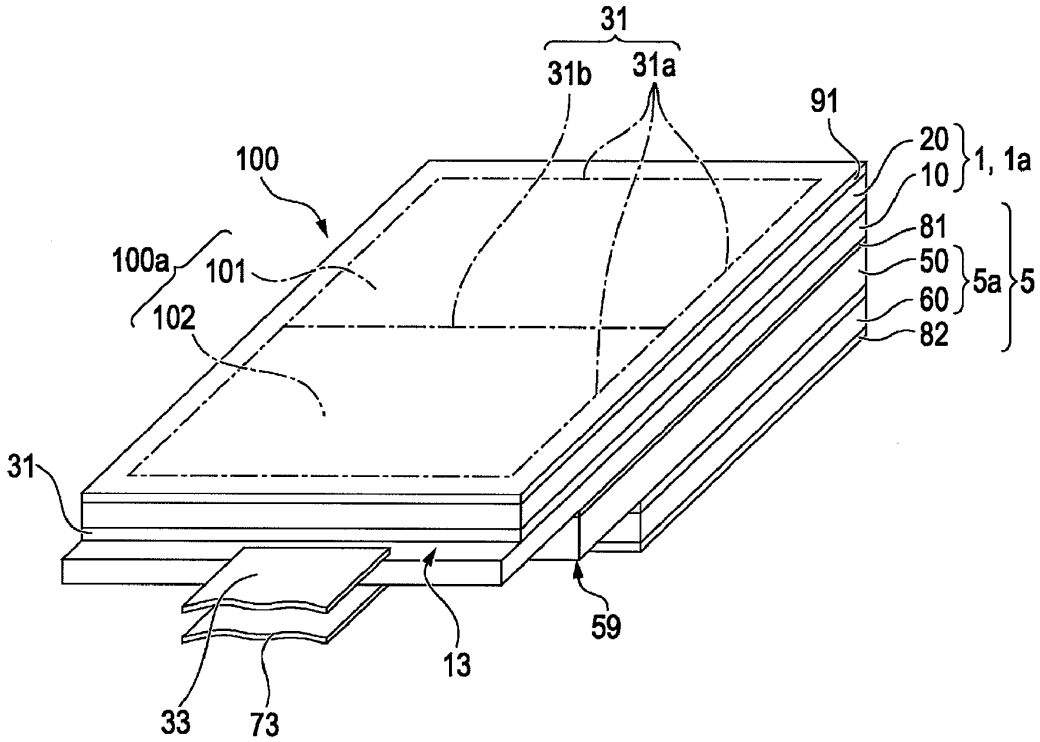
31
31b
31a
91
20
10
1, 1a
100
81
50
5a
5
60
82
100a
101
102
31
59
13
33
73

FIG. 2

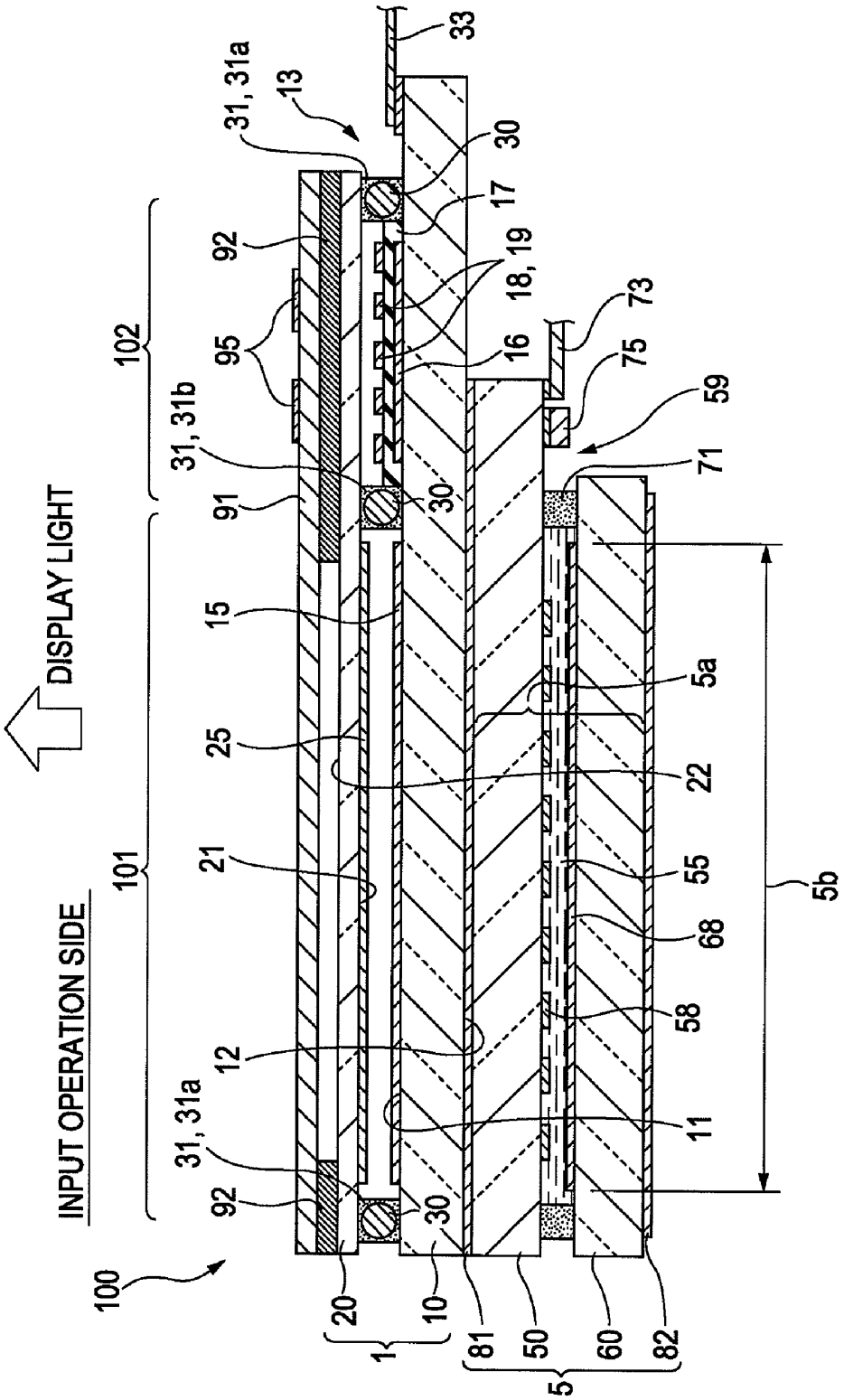
DISPLAY LIGHT
INPUT OPERATION SIDE
100
101
102
1
5
5a
5b
10
11
12
13
15
16
17
18, 19
20
21
22
25
30
31, 31a
31, 31b
33
50
55
58
59
60
68
71
73
75
81
82
91
92
95

FIG. 3

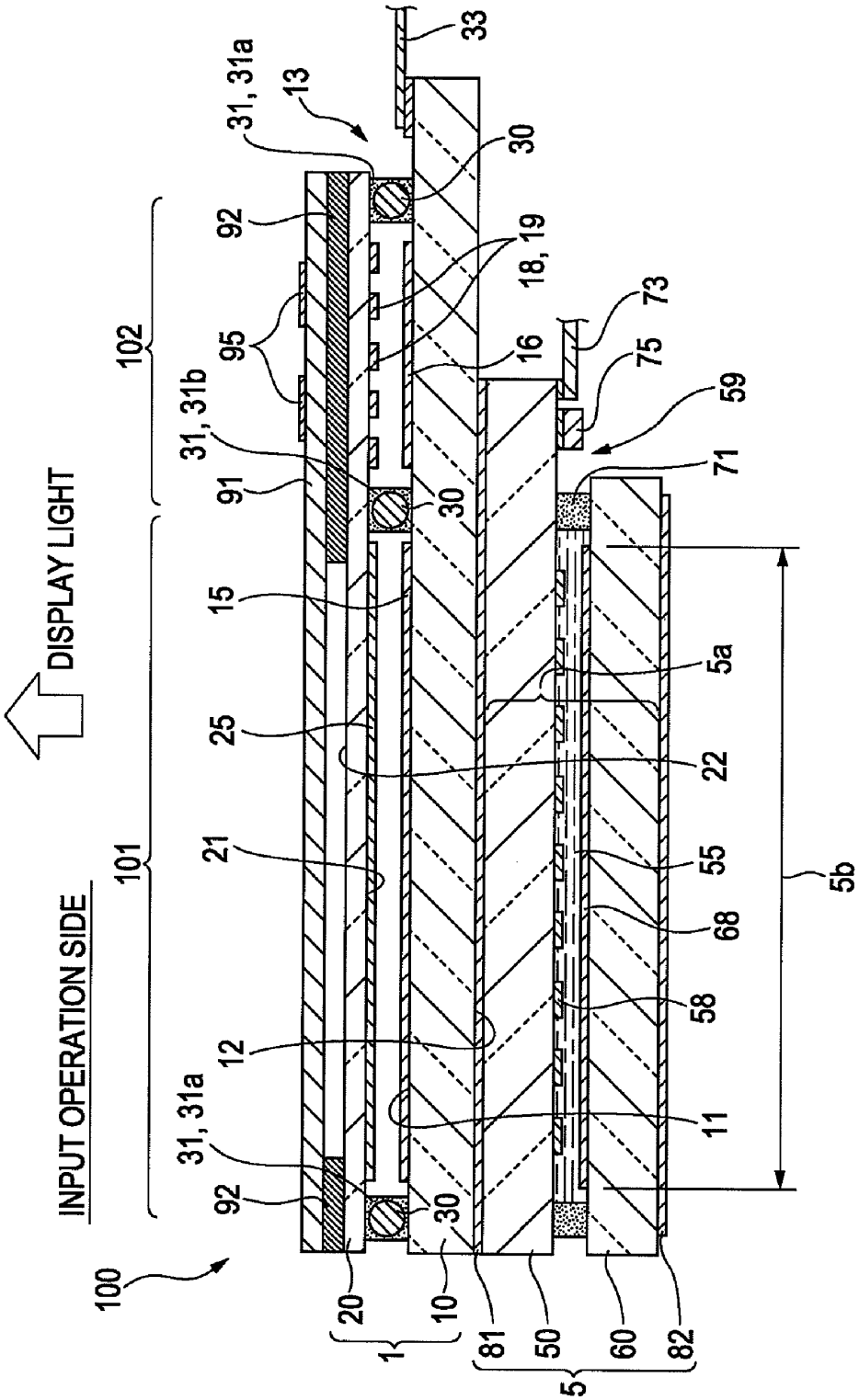
DISPLAY LIGHT
INPUT OPERATION SIDE
100
101
102
1
5
10
11
12
13
15
16
18, 19
20
21
22
25
30
31, 31a
31, 31b
33
50
55
58
59
60
68
71
73
75
81
82
91
92
95
5a
5b

FIG. 4

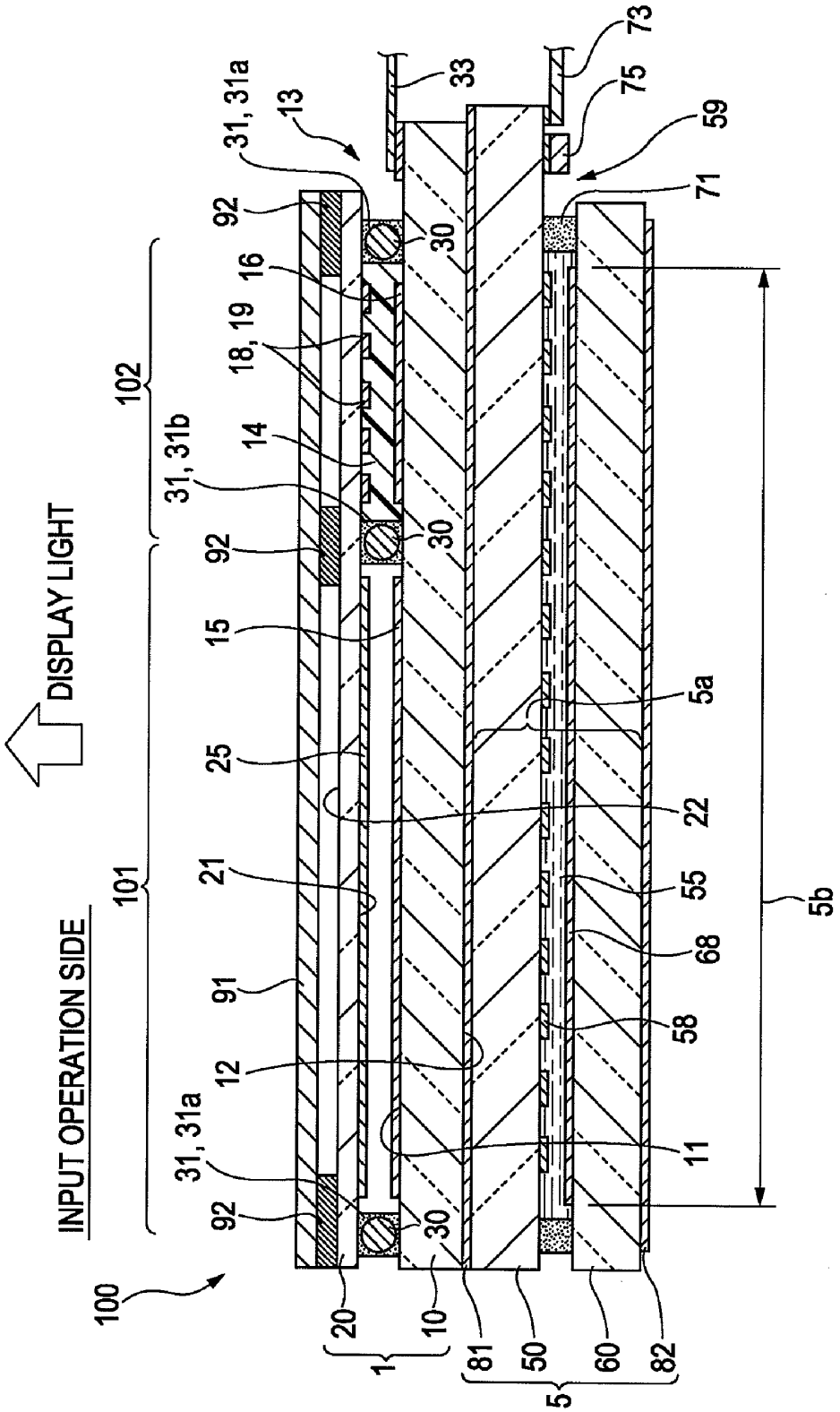
DISPLAY LIGHT
INPUT OPERATION SIDE
100
101
102
1
5
5a
5b
10
11
12
13
14
15
16
18, 19
20
21
22
25
30
31, 31a
31, 31b
33
50
55
58
59
60
68
71
73
75
81
82
91
92

FIG. 5

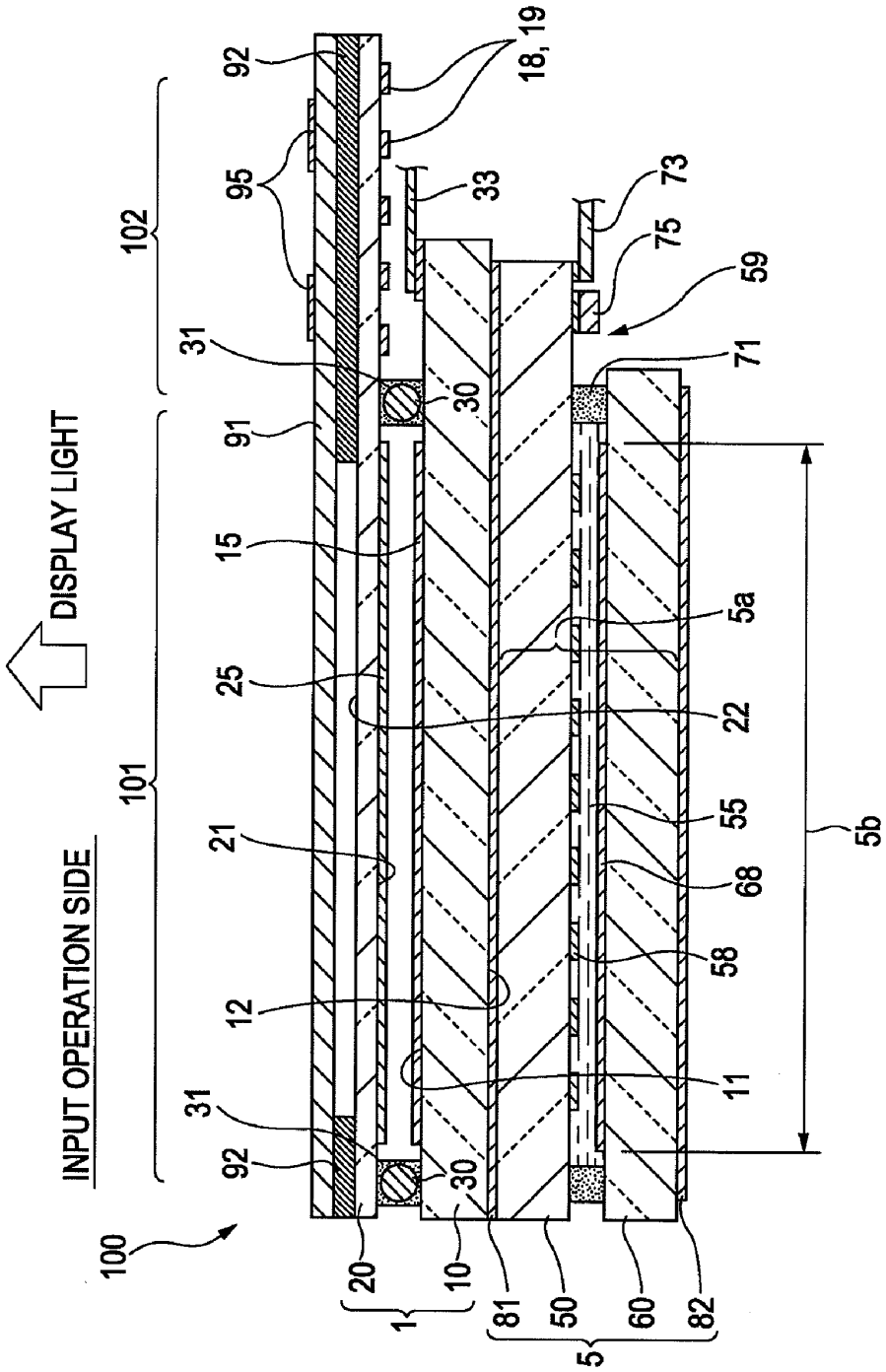
DISPLAY LIGHT
INPUT OPERATION SIDE
100
101
102
1
5
5a
5b
10
11
12
15
18, 19
20
21
22
25
30
31
33
50
55
58
59
60
68
71
73
75
81
82
91
92
95

FIG. 6

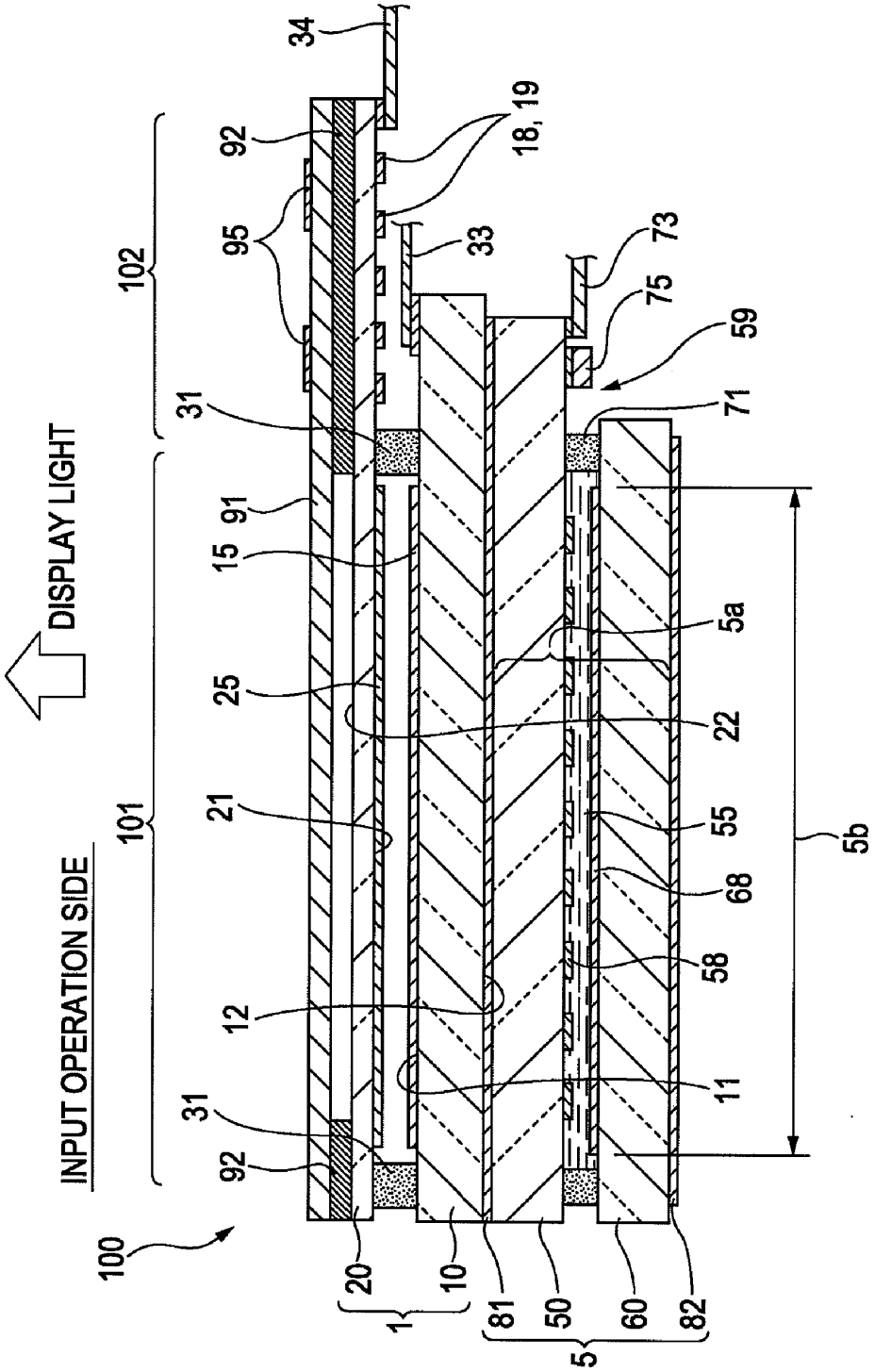
DISPLAY LIGHT
INPUT OPERATION SIDE
100
101
102
1
5
5a
5b
10
11
12
15
18, 19
20
21
22
25
31
33
34
50
55
58
59
60
68
71
73
75
81
82
91
92
95

FIG. 7

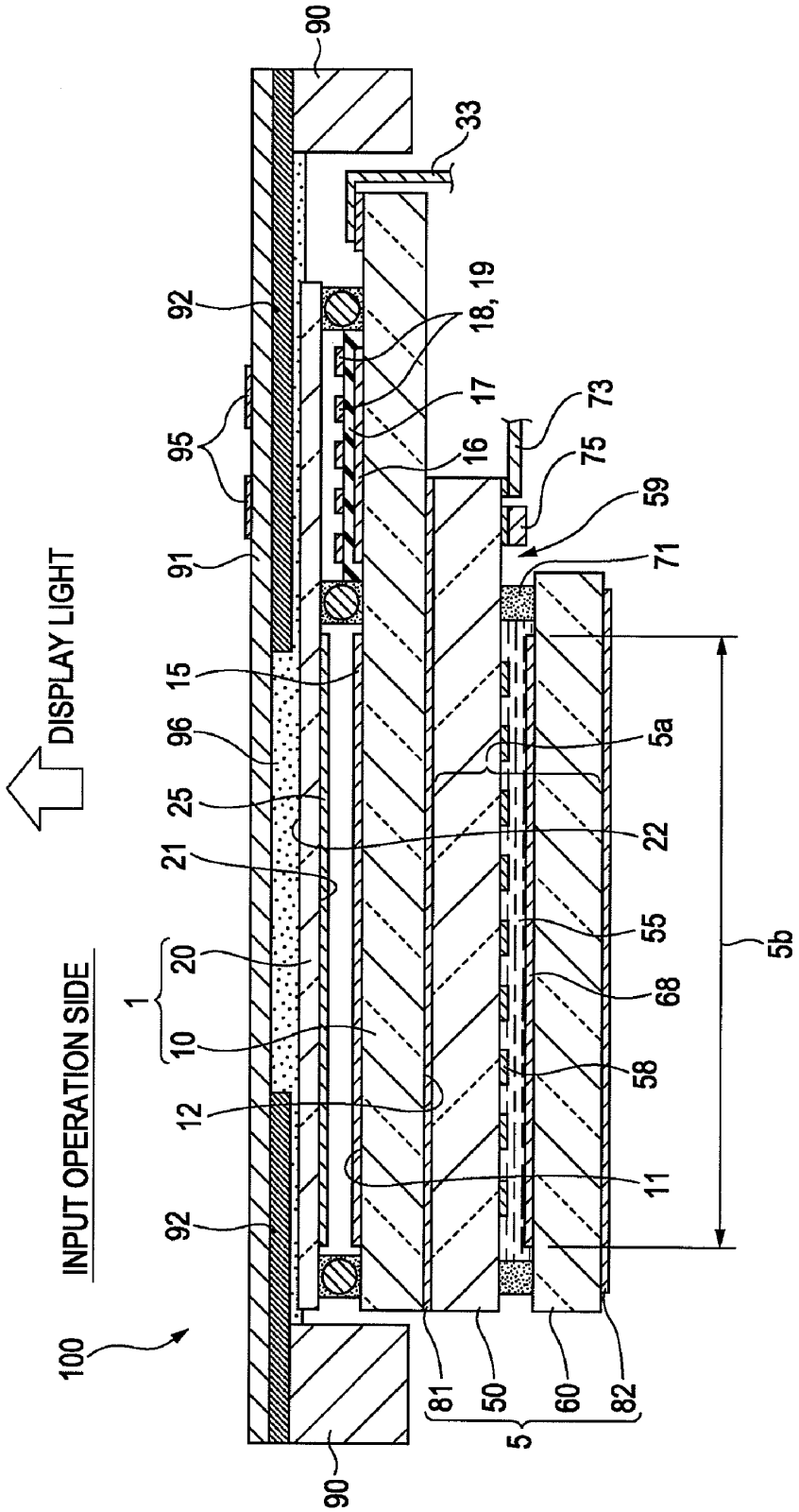
DISPLAY LIGHT
INPUT OPERATION SIDE
100
90
92
95
91
15
96
25
21
20
1
10
12
92
90
33
18, 19
17
16
73
75
59
71
5a
22
55
68
58
11
5b
81
50
60
82
5

FIG. 8A

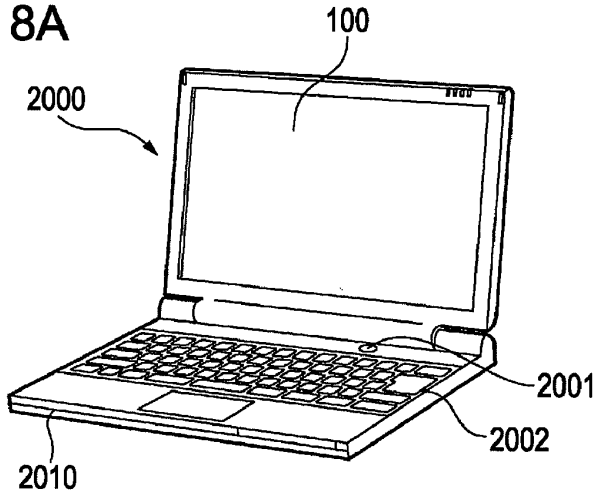

FIG. 8B

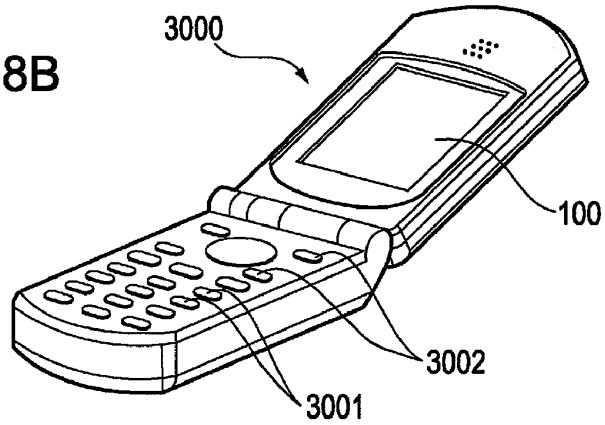

FIG. 8C

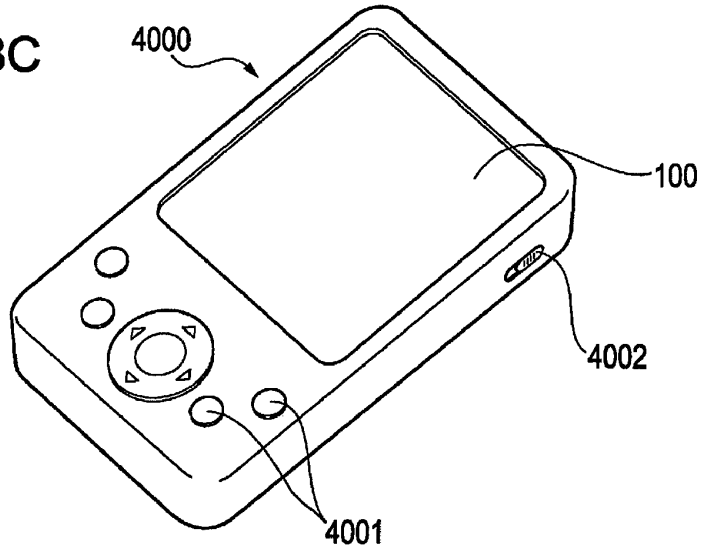

FIG. 9

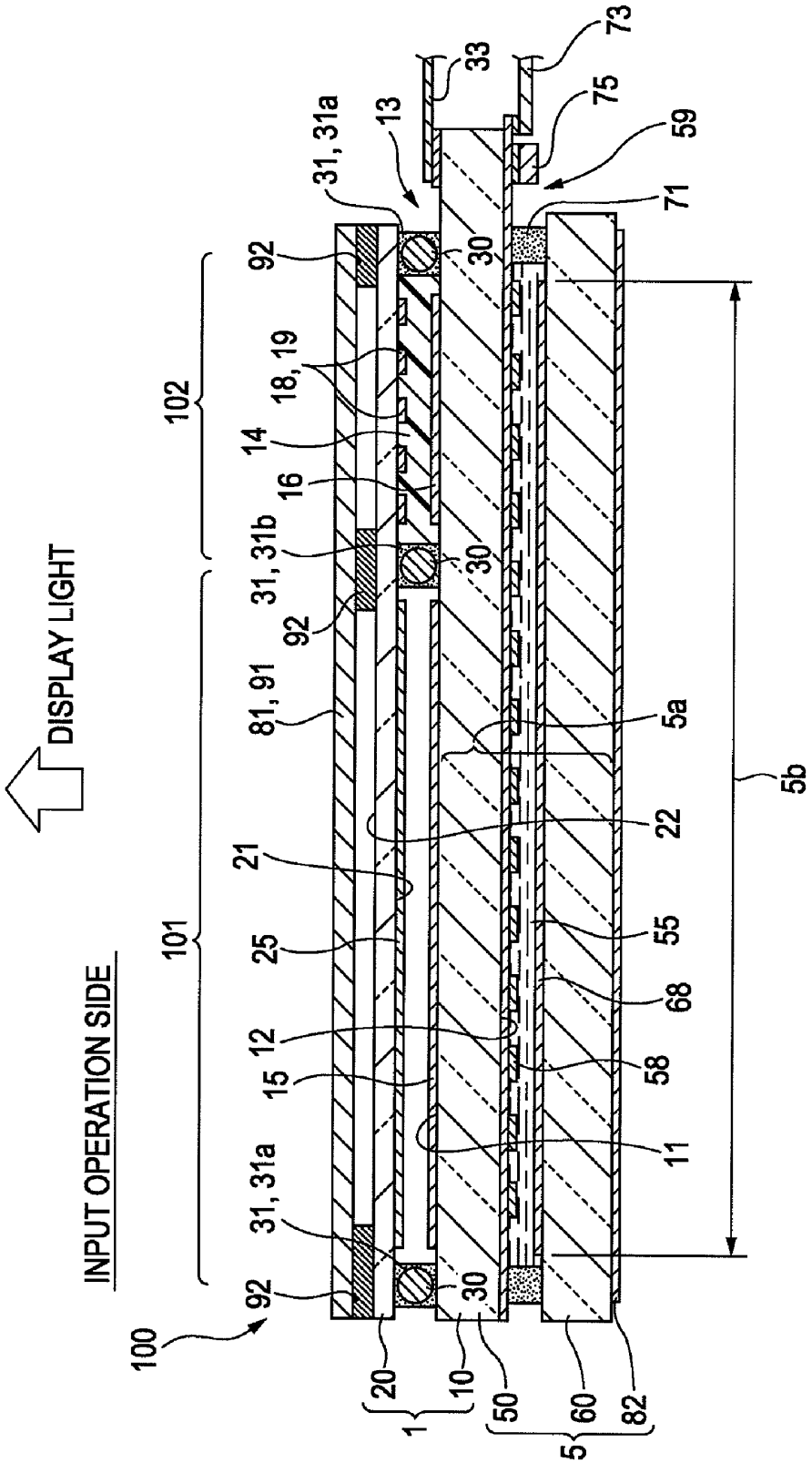
DISPLAY LIGHT
INPUT OPERATION SIDE
100
101
102
1
5
5a
5b
10
11
12
13
14
15
16
18, 19
20
21
22
25
30
31, 31a
31, 31b
33
50
55
58
59
60
68
71
73
75
81, 91
82
92

TOUCH PANEL, DISPLAY DEVICE WITH INPUT FUNCTION, AND ELECTRONIC APPARATUS

[0001] The entire disclosure of Japanese Patent Application Nos. 2007-268677, filed Oct. 16, 2007 and 2008-144366, filed Jun. 2, 2008 are expressly incorporated by reference herein.

BACKGROUND

[0002] 1. Technical Field

[0003] The present invention relates to a touch panel having a resistive film type input area capable of detecting a position where, for example, a finger is contacted, a display device with an input function including the touch panel, and an electronic apparatus.

[0004] 2. Related Art

[0005] In recent years, electronic apparatuses in which an input device, which is called a touch panel, is provided on a liquid crystal display device, such as mobile phones, car navigation systems, personal computers, ticket machines, and banking terminals, have been developed. This type of electronic apparatus allows a user to input information while viewing an image displayed in an image display area of the liquid crystal display device.

[0006] Among these touch panels, a resistive film type touch panel includes a first substrate and a second substrate opposite to each other, and a first electrode and a second electrode are formed on surfaces of the first substrate and the second substrate facing each other. When the second substrate is pressed, a contact position between the first electrode and the second electrode is detected, thereby detecting input coordinates. In addition, there is a capacitance type touch panel which includes one substrate having an electrode formed thereon. In the capacitance type touch panel, when, for example, a finger contacts and approaches the touch panel, a variation in capacitance between the electrode and the finger is detected, thereby detecting input coordinates. Since the capacitance type touch panel is a non-contact type, it has high durability, unlike the resistive film type touch panel. However, the capacitance type touch panel has disadvantages in that it is difficult to input information with fingers or a pen.

[0007] In order to solve the above problems, a structure has been proposed in which a resistive film type touch panel and a capacitance type touch panel are separately manufactured, and overlap each other without any gap therebetween to detect plural kinds of pressed states (Japanese Unexamined Patent Application Publication No. 7-334308).

[0008] The inventors propose a touch panel that is capable of supporting various input methods, such as a method of scrolling the screen with fingers and inputting information with a pen, and has input areas arranged in a plane.

[0009] However, in the touch panel disclosed in Japanese Unexamined Patent Application Publication No. 7-334308 in which the resistive film type touch panel and the capacitance type touch panel are separately manufactured and overlap each other in plan view, since the touch panels are separately manufactured, manufacturing costs increases, and the thickness of the structure increases. In addition, an electrical connection area or frame areas surrounding the two touch panel areas increase, which results in a reduction in input area. Further, when the resistive film type touch panel and the capacitance type touch panel overlap each other in plan view and a display device is provided thereon, it is difficult to display different contents in an area used to scroll the screen and an area used for pen input. Therefore, it is difficult to appropriately display an input prompt.

SUMMARY

[0010] An advantage of some aspects of the invention is that provides a technique for manufacturing a touch panel that is capable of supporting a plurality of input modes and has a large input area at a low cost.

[0011] Another advantage of some aspects of the invention is that provides a display device with an input function including the touch panel and an electronic apparatus including the touch panel.

[0012] According to an aspect of the invention, a touch panel includes: first and second substrates each having a first surface and a second surface, the second substrate being arranged on an input operation side of the first substrate; a first electrode that is formed on the first surface of the first substrate; a second electrode that is formed on the first surface of the second substrate; a resistive film type input area in which the first electrode of the first substrate and the second electrode of the second substrate face each other; and a capacitance type input area in which third electrodes are formed on at least one of the first substrate and the second substrate. The resistive film type input area and the capacitance type input area are separated from each other in a plan view.

[0013] In the above-mentioned structure, since one touch panel includes the resistive film type input area and the capacitance type input area, a user can input information by various input methods. For example, the user can scroll the screen with fingers in the capacitance type input area, and input information with a pen in the resistive film type input area. Therefore, usability is improved. Since the resistive film type input area and the capacitance type input area are arranged so as to be separated from each other in plan view, it is possible to perform optimum information input in both the resistive film type input area and the capacitance type input area. Further, since the third electrodes forming the capacitance type input area are formed on at least one of the first substrate and the second substrate on which the first and second electrodes forming the resistive film type input area are formed, it is possible to reduce manufacturing costs, as compared to a structure in which a resistive film type touch panel and a capacitance type touch panel are separately manufactured and arranged in a plane. In addition, since an electrical connection area and a frame area surrounding each input area are provided in a common area, it is possible to ensure a large input area.

[0014] In the touch panel according to the above-mentioned aspect, preferably, the third electrodes are formed on the first surface of the first substrate or the first surface of the second substrate. According to the above-mentioned structure, it is possible to form a conductive film required to form the capacitance type input area, for example, the third electrodes, some of the third electrodes, or a shield layer for the capacitance type input area, simultaneously with the first electrode or the second electrode. As a result, it is possible to improve productivity.

[0015] In the touch panel according to the above-mentioned aspect, preferably, a wiring member that outputs signals from the resistive film type input area and the capacitance type input area to the outside is connected to one of the first surface of the first substrate and the first surface of the second

substrate on which the third electrodes are formed. According to the above-mentioned structure, the wiring member, such as a flexible substrate, may be connected to only the first surface of the substrate having the third electrodes formed thereon.

[0016] In the touch panel according to the above-mentioned aspect, preferably, a wiring member that outputs signals from the resistive film type input area and the capacitance type input area to the outside is connected to one of the first surface of the first substrate and the first surface of the second substrate on which the third electrodes are not formed, and an inter-substrate conductive material that outputs signals from the capacitance type input area to the outside is provided between the first surface of the first substrate and the first surface of the second substrate. According to the above-mentioned structure, the wiring member, such as a flexible substrate, may be connected to only the first surface of the substrate that is opposite to the substrate having the third electrodes formed thereon.

[0017] In the touch panel according to the above-mentioned aspect, preferably, the wiring member is connected to the first surface of the first substrate. The second substrate arranged on the input operation side needs to have flexibility and has a small thickness. Therefore, the second substrate is not suitable for connection to the wiring member. However, in the above-mentioned aspect of the invention, the wiring member is connected to the first substrate without these restrictions. Therefore, it is possible to form a connection portion having high reliability.

[0018] According to another aspect of the invention, a display device with an input function includes: the touch panel according to the above-mentioned aspect; and an image generating device that is provided on one surface of the first substrate of the touch panel opposite to the second substrate.

[0019] In the display device with an input function according to the above-mentioned aspect, preferably, at least one of the resistive film type input area and the capacitance type input area is a transmissive input area, and the image generating device includes an image display area that overlaps the transmissive input area.

[0020] In the display device with an input function according to the above-mentioned aspect, preferably, both the resistive film type input area and the capacitance type input area are transmissive input areas, and the image generating device includes an image display area that overlaps both the transmissive input areas.

[0021] In the display device with an input function according to the above-mentioned aspect, preferably, the image generating device includes a pair of substrates and an electro-optical material that is interposed between the pair of substrates, and the first substrate also serves as one of the pair of substrates. According to the above-mentioned structure, it is possible to reduce the number of substrates of the image generating devices or the touch panel, and thus reduce the thickness of the display device with an input function. In addition, for example, it is possible to divide an input area into an area used to scroll the screen and an area for pen input. Therefore, it is possible to switch images displayed by the image generating device according to the function of each input area. As a result, operability is improved.

[0022] The display device with an input function according to the above-mentioned aspect may be applied to various electronic apparatuses, such as mobile phones, car navigation systems, personal computers, ticket machines, and banking terminals.

BRIEF DESCRIPTION OF THE DRAWINGS

[0023] The invention will be described with reference to the accompanying drawings, wherein like numbers reference like elements.

[0024] FIG. **1** is a diagram schematically illustrating the structure of a display device with an input function according to the invention.

[0025] FIG. **2** is a cross-sectional view schematically illustrating the structure of a display device with an input function according to a first embodiment of the invention.

[0026] FIG. **3** is a cross-sectional view schematically illustrating the structure of a display device with an input function according to a second embodiment of the invention.

[0027] FIG. **4** is a cross-sectional view schematically illustrating the structure of a display device with an input function according to a third embodiment of the invention.

[0028] FIG. **5** is a cross-sectional view schematically illustrating the structure of a display device with an input function according to a fourth embodiment of the invention.

[0029] FIG. **6** is a cross-sectional view schematically illustrating the structure of a display device with an input function according to a fifth embodiment of the invention.

[0030] FIG. **7** is a cross-sectional view schematically illustrating the structure of a display device with an input function according to a sixth embodiment of the invention.

[0031] FIGS. **8**A to **8**C are diagrams illustrating electronic apparatuses provided with the display device with an input function according to the embodiments of the invention.

[0032] FIG. **9** is a cross-sectional view schematically illustrating the structure of a display device with an input function according to a seventh embodiment of the invention.

DESCRIPTION OF EXEMPLARY EMBODIMENTS

[0033] Hereinafter, exemplary embodiments of the invention will be described with reference to the accompanying drawings. In the following drawings, a scale of each layer or member is adjusted in order to have a recognizable size.

First Embodiment

Overall Structure

[0034] FIGS. **1** and **2** are diagrams schematically illustrating the structure of a display device with an input function according to an embodiment of the invention. In FIG. **2**, for example, the number of electrodes of a touch panel and the number of pixel electrodes or opposite electrodes of a liquid crystal display device are different from the actual numbers, for clarity of description.

[0035] In FIGS. **1** and **2**, a display device **100** with an input function according to the first embodiment mainly includes a liquid crystal display device **5**, serving as an image generating device, and a touch panel **1** (input device) that is provided on one surface of the liquid crystal display device **5** from which display light is emitted.

[0036] The liquid crystal display device **5** includes a transmissive, reflective, or transflective active matrix liquid crystal panel **5***a*. In this embodiment, since the liquid crystal panel **5***a* is a transmissive type, a backlight unit (not shown) is provided on one surface of the liquid crystal panel that is opposite to the

other surface from which display light is emitted. In addition, in the liquid crystal display device **5**, a first polarizing plate **81** is provided on the other surface of the liquid crystal panel **5***a* from which display light is emitted, and a second polarizing plate **82** is provided on the one surface of the liquid crystal panel opposite to the light emission surface.

[0037] The liquid crystal panel **5***a* includes a transmissive element substrate **50** that is provided on the emission side of display light and a transmissive opposite substrate **60** that is arranged opposite to the element substrate **50**. The opposite substrate **60** and the element substrate **50** are bonded to each other by a frame-shaped sealing material **71**, and a liquid crystal layer **55** (electro-optical material layer) is provided in an area surrounded by the sealing material **71** between the opposite substrate **60** and the element substrate **50**.

[0038] A plurality of pixel electrodes **58** are formed on one surface of the element substrate **50** that faces the opposite substrate **60**, and a common electrode **68** is formed on one surface of the opposite substrate **60** that faces the element substrate **50**. The common electrode **68** may be formed on the element substrate **50**. In addition, the opposite substrate **60** may be provided on the emission side of display light.

[0039] On the element substrate **50**, a driving IC **75** is mounted on a protruding region **59** that protrudes from the edge of the opposite substrate **60** by a COG technique, and a flexible substrate **73** is connected to the protruding region **59**. A driving circuit may be formed simultaneously with switching elements on the element substrate **50**.

Detailed Structure of Touch Panel **1**

[0040] In the touch panel **1** according to this embodiment, an input area **100***a* includes a resistive film type input area **101** and a capacitance type input area **102**, which will be described below, and the resistive film type input area **101** and the capacitance type input area **102** are arranged so as to be separated from each other in plan view.

[0041] In this embodiment, the touch panel **1** includes a first transmissive substrate **10** that is formed of, for example, a glass plate or a plastic plate, and a second transmissive substrate **20** that is formed of, for example, a glass plate or a plastic plate. In this embodiment, both the first substrate **10** and the second substrate **20** are formed of glass plates. The first substrate **10** and the second substrate **20** are bonded to each other by a frame-shaped sealing material **31** such that their first surfaces **11** and **21** are opposite to each other with a predetermined gap therebetween. The second substrate **20** is arranged on the input operation side, and the first substrate **10** is arranged on the liquid crystal display device **5**. Therefore, a second surface **22** of the second substrate **20** faces the input operation side, and a second surface **12** of the first substrate **10** faces the liquid crystal display device **5**. In the touch panel **1** having the above-mentioned structure, when an input operation is performed in the resistive film type input area **101**, it is necessary to bend the second substrate **20**. Therefore, the second substrate **20** has a thickness smaller than the first substrate **10** and has flexibility.

[0042] On the first surface **11** of the first substrate **10**, a flexible substrate **33** is connected to a protruding region **13** that protrudes from the edge of the second substrate **20**. The flexible substrate **33** is a common wiring member that outputs signals from the resistive film type input area **101** and the capacitance type input area **102** to the outside.

[0043] The sealing material **31** includes an outer frame portion **31***a* that is provided along the edge of the second substrate **20** and a partition frame portion **31***b* that connects the middle points of two sides of the outer frame portion **31***a*. Almost the entire area surrounded by the sealing material **31** serves as the input area **100***a*. In addition, in the input area **100***a*, the resistive film type input area **101** is arranged on one side of the partition frame portion **31***b* (the side that is far away from the end of the input area to which the flexible substrate **33** is connected), and the capacitance type input area **102** is arranged on the other side (to which the flexible substrate **33** is connected) of the partition frame portion **31***b*.

[0044] In the resistive film type input area **101** of the touch panel **1**, a first transmissive electrode **15** that is composed of an ITO (indium tin oxide) film is formed on the first surface **11** of the first substrate **10**, and a second transmissive electrode **25** that is composed of an ITO film is formed on the first surface **21** of the second substrate **20**. In addition, an air layer is provided therebetween.

[0045] A wiring pattern (not shown) is formed on the first surface **11** of the first substrate **10** so as to extend from the first electrode **15** to the protruding region **13**, and the wiring pattern makes it possible to output signals from the first electrode **15** to the flexible substrate **33**. In addition, an inter-substrate conductive material **30**, such as plastic beads having surfaces coated with a metal layer, is mixed with the sealing material **31**. The inter-substrate conductive material **30** is interposed between the first surface **11** of the first substrate **10** and the first surface **21** of the second substrate **20**, and electrically connects the second electrode **25** formed on the first surface **21** of the second substrate **20** and the wiring pattern (not shown) formed on the first surface **11** of the first substrate **10**. The inter-substrate conductive material **30** and the wiring pattern make it possible to output signals from the second electrode **25** to the flexible substrate **33**.

[0046] In the resistive film type input area **101** having the above-mentioned structure, when the second substrate **20** is pressed, the first electrode **15** contacts the second electrode **25** in the pressed portion. Therefore, it is possible to detect input coordinates by detecting the contact position. Thus, a user can press a predetermined portion of the second substrate **20** of the resistive film type input area **101** with, for example, fingers or a pen to input information.

[0047] In the capacitance type input area **102** of the touch panel **1**, a transmissive shield layer **16** composed of an ITO film, a transmissive insulating film **17** composed of, for example, a silicon oxide film, and transmissive third electrodes **18** and **19** composed of an ITO film are sequentially formed on the first surface **11** of the first substrate **10**. The shield layer **16** has a function of preventing the influence of external noise.

[0048] The third electrodes **18** and **19** are composed of, for example, a plurality of rows of electrode patterns that extend so as to intersect each other. FIG. **2** schematically illustrates the third electrodes **18** and **19** without discriminating them. For example, the third electrodes **18** and **19** may have a structure that includes a large-area portion, such as a pad, or a structure in which triangular patterns that are opposite to each other in the horizontal direction are alternately arranged. In any case, a wiring pattern (not shown) extends from the third electrodes **18** and **19** to the protruding region **13**, and the wiring pattern makes it possible to output signals from the third electrodes **18** and **19** to the flexible substrate **33**.

[0049] In the capacitance type input area **102** having the above-mentioned structure, when a voltage is sequentially applied to a plurality of third electrodes **18** and **19** and a finger,

which is a conductor, contacts or approaches any portion of the capacitance type input area, capacitance is formed between the electrodes **18** and **19** and the finger, and the capacitance detected by the third electrodes **18** and **19** is lowered. Therefore, it is possible to detect where the finger is contacted or approached. The capacitance type input area **102** makes it possible for the user to input information with a finger in a non-contact manner. However, the capacitance type input area **102** has a disadvantage in that it is difficult to input information with a pen formed of an insulating material.

[0050] A sheet **91** is provided on the input operation side of the touch panel **1** having the above-mentioned structure, and a light shielding layer **92** is formed in a frame shape on the inner surface of the sheet **91** (one surface of the sheet **91** facing the touch panel **1**). The light shielding layer **92** is formed in an area overlapping the capacitance type input area **102**, but is not formed in an area overlapping the resistive film type input area **101**. Therefore, the capacitance type input area **102** serves as a light shielding area, and the resistive film type input area **101** serves as a transmissive area. In addition, an image display area **5***b* of the liquid crystal display device **5** overlaps the resistive film type input area **101**. Therefore, in the display device **100** with an input function according to this embodiment, it is possible for a viewer to view the image displayed by the liquid crystal display device **5** from the input operation side through the resistive film type input area **101**. In the capacitance type input area **102**, a symbol indicating a cursor key **95** is printed on the outer surface of the sheet **91** (the input operation side surface). Meanwhile, a hard coating layer may be formed on the outer surface of the sheet **91**, if necessary. When the sheet **91** is configured to serve as the first polarizing plate **81**, that is, when the sheet **91** also serves as the first polarizing plate **81**, the first polarizing plate **81** may be omitted. As a result, it is possible to reduce the thickness of the touch panel **1**. However, the invention is not limited to the structure in which the sheet **91** also serves as the first polarizing plate **81**. For example, any of the members provided on the surface of the liquid crystal panel **5***a* from which display light is emitted may have the function of the first polarizing plate **81**.

Main Effects of First Embodiment

[0051] As described above, in this embodiment, one touch panel **1** includes both the resistive film type input area **101** and the capacitance type input area **102**. Therefore, in the capacitance type input area **102**, the user touches the cursor key **95** with a finger to scroll the screen displayed on the liquid crystal display device **5**. In addition, in the resistive film type input area **101**, the user pushes a selection button displayed on the liquid crystal display device **5** with, for example, a pen to input information. That is, according to the touch panel **1** of this embodiment, it is possible to input information using various methods. As a result, it is possible to improve usability.

[0052] Further, since the resistive film type input area **101** and the capacitance type input area **102** are separated from each other in plan view, it is possible to scroll the screen in the capacitance type input area **102**, while viewing the screen displayed by the liquid crystal display device **5**, and then input information in the resistive film type input area **101** with a pen. Therefore, it is possible to perform optimal information input both in the resistive film type input area **101** and the capacitance type input area **102**.

[0053] Furthermore, the third electrodes **18** and **19** for forming the capacitance type input area **102** are formed on the first surface **11** of the first substrate **10** on which the first electrode **15** forming the resistive film type input area **101** is formed. Therefore, it is possible to reduce the number of substrates, as compared to a structure in which a resistive film type touch panel and a capacitance type touch panel that are separately manufactured and arranged in a plane. In addition, the shield layer **16** or the third electrodes **18** and **19** can be formed simultaneously with the first electrode **15**. Therefore, it is possible to reduce the number of manufacturing processes. As a result, it is possible to reduce the manufacturing costs of the touch panel **1**.

[0054] Further, for example, a common partition frame portion **31***b* is used for the resistive film type input area **101** and the capacitance type input area **102**. Therefore, it is possible to ensure a large input area, as compared to a structure in which the resistive film type input area **101** and the capacitance type input area **102** are sealed by individual seal materials. Similarly, since the inter-substrate conductive material **30** is used to electrically connect the first substrate **10** and the second substrate, it is possible to output signals from the resistive film type input area **101** and the capacitance type input area **102** to the outside using the common flexible substrate **33**. Therefore, it is not necessary to individually provide flexible substrate contact areas in the resistive film type input area **101** and the capacitance type input area **102**. As a result, it is possible to ensure a large input area.

[0055] Furthermore, the flexible substrate **33** is connected to the first surface **11** of the first substrate **10**, and the first substrate **10** is thicker than the second substrate **20**. Therefore, according to this embodiment, it is possible to improve the reliability of a connection portion of the flexible substrate, as compared to a structure in which the flexible substrate **33** is connected to the second substrate **20**.

Second Embodiment

[0056] In the first embodiment, the third electrodes **18** and **19** forming the capacitance type input device **102** are formed on the first substrate **10**. However, in this embodiment, as will be described below with reference to FIG. **3**, the third electrodes **18** and **19** are formed on the first surface of the second substrate **20**.

[0057] FIG. **3** is a cross-sectional view schematically illustrating the structure of a display device **100** with an input function according to the second embodiment of the invention. The basic structure according to this embodiment is the same as that in the first embodiment. Therefore, in the second embodiment, the same components as those in the first embodiment are denoted by the same reference numerals, and a description thereof will be omitted.

[0058] As shown in FIG. **3**, in this embodiment, similar to the first embodiment, the display device **100** with an input function includes a liquid crystal display device **5** and a touch panel **1** that is provided on one surface of the liquid crystal display device **5** from which display light is emitted. In addition, in the touch panel **1**, an input area **100***a* includes a resistive film type input area **101** and a capacitance type input area **102**, which will be described below, and the resistive film type input area **101** and the capacitance type input area **102** are separated from each other in plan view.

[0059] In this embodiment, similar to the first embodiment, in the resistive film type input area **101** of the touch panel **1**, a first transmissive electrode **15** that is composed of an ITO

film is formed on the first surface **11** of the first substrate **10**, and a second transmissive electrode **25** that is composed of an ITO film is formed on the first surface **21** of the second substrate **20**. In addition, an air layer is provided therebetween. A wiring pattern (not shown) is formed on the first surface **11** of the first substrate **10** so as to extend from the first electrode **15** to the protruding region **13**, and the wiring pattern makes it possible to output signals from the first electrode **15** to the flexible substrate **33**. In addition, an inter-substrate conductive material **30** mixed with a sealing material **31** is interposed between the first surface **11** of the first substrate **10** and the first surface **21** of the second substrate **20**, and electrically connects the second electrode **25** formed on the first surface **21** of the second substrate **20** and the wiring pattern (not shown) formed on the first surface **11** of the first substrate **10**. The inter-substrate conductive material **30** and the wiring pattern make it possible to output signals from the second electrode **25** to the flexible substrate **33**.

[0060] In this embodiment, in the capacitance type input area **102**, the third transmissive electrodes **18** and **19** are formed on the first surface **21** of the second substrate **20**. However, the inter-substrate conductive material **30** mixed with the sealing material **31** is interposed between the first surface **11** of the first substrate **10** and the first surface **21** of the second substrate **20** to electrically connect the third electrodes **18** and **19** formed on the first surface **21** of the second substrate **20** to the wiring pattern (not shown) formed on the first surface **11** of the first substrate **10**. Therefore, the inter-substrate conductive material **30** and the wiring pattern make it possible to output signals from the third electrodes **18** and **19** to the flexible substrate **33**.

[0061] In the capacitance type input area **102**, a transmissive shield layer **16** composed of an ITO film is formed on the first surface **11** of the first substrate **10**. Therefore, it is possible to prevent the influence of external noise.

[0062] A sheet **91** is provided on the input operation side of the touch panel **1** having the above-mentioned structure, and a light shielding layer **92** is formed in a frame shape on the inner surface of the sheet **91** (one surface of the sheet **91** facing the touch panel **1**). The light shielding layer **92** is formed in an area overlapping the capacitance type input area **102**, but is not formed in an area overlapping the resistive film type input area **101**. Therefore, the capacitance type input area **102** serves as a light shielding area, and the resistive film type input area **101** serves as a transmissive area. Therefore, in the display device **100** with an input function according to this embodiment, it is possible for a viewer to view the image displayed by the liquid crystal display device **5** from the input operation side through the resistive film type input area **101**. In the capacitance type input area **102**, a symbol indicating a cursor key **95** is printed on the outer surface of the sheet **91** (the surface on the input operation side). The other structures are substantially the same as those in the first embodiment, and thus a description thereof will be omitted.

[0063] In the display device **100** with an input function having the above-mentioned structure, similar to the first embodiment, since the resistive film type input area **101** and the capacitance type input area **102** are separated from each other in plan view, it is possible to obtain the same effects as those in the first embodiment, such as improvement in usability.

[0064] Furthermore, the third electrodes **18** and **19** for forming the capacitance type input area **102** are formed on the second substrate **20** on which the second electrode **25** forming the resistive film type input area **101** is formed. Therefore, it is possible to reduce the number of substrates, as compared to a structure in which a resistive film type touch panel and a capacitance type touch panel are separately manufactured and arranged in a plane. In addition, the third electrodes **18** and **19** can be formed simultaneously with the second electrode **25**. Therefore, it is possible to reduce the number of manufacturing processes. As a result, it is possible to obtain the same effects as those in the first embodiment, such as a reduction in the manufacturing costs of the touch panel **1**.

Third Embodiment

[0065] In the first and second embodiments, the capacitance type input area **102** serves as a light shielding area, and the resistive film type input area **101** serving as a transmissive area. Therefore, it is possible to view the image displayed by the liquid crystal display device **5** from the input operation side only through the resistive film type input area **101**. However, as will be described below with reference to FIG. **4**, in a third embodiment, both the capacitance type input area **102** and the resistive film type input area **101** serve as the transmissive areas. Therefore, according to this embodiment, it is possible to view the image displayed by the liquid crystal display device **5** from the input operation side through both the resistive film type input area **101** and the capacitance type input area **102**.

[0066] FIG. **4** is a cross-sectional view schematically illustrating the structure of a display device **100** with an input function according to the third embodiment of the invention. The basic structure of this embodiment is the same as that in the first and second embodiments. Therefore, in the third embodiment, the same components as those in the first and second embodiments are denoted by the same reference numerals, and a description thereof will be omitted.

[0067] As shown in FIG. **4**, in this embodiment, similar to the first and second embodiments, the display device **100** with an input function includes a liquid crystal display device **5** and a touch panel **1** that is provided on one surface of the liquid crystal display device **5** from which display light is emitted. In addition, in the touch panel **1**, an input area **100*a*** includes a resistive film type input area **101** and a capacitance type input area **102**, which will be described below, and the resistive film type input area **101** and the capacitance type input area **102** are separated from each other in plan view.

[0068] In this embodiment, similar to the first and second embodiments, in the resistive film type input area **101** of the touch panel **1**, a first transmissive electrode **15** that is composed of an ITO film is formed on a first surface **11** of a first substrate **10**, and a second transmissive electrode **25** that is composed of an ITO film is formed on a first surface **21** of a second substrate **20**. In addition, an air layer is provided therebetween. Further, an inter-substrate conductive material **30** mixed with a sealing material **31** is interposed between the first surface **11** of the first substrate **10** and the first surface **21** of the second substrate **20**, and electrically connects the second electrode **25** formed on the first surface **21** of the second substrate **20** and a wiring pattern (not shown) formed on the first surface **11** of the first substrate **10**. The inter-substrate conductive material **30** and the wiring pattern make it possible to output signals from the second electrode **25** to a flexible substrate **33**.

[0069] In this embodiment, in the capacitance type input area **102**, similar to the second embodiment, third transmissive electrodes **18** and **19** are formed on the first surface of the

second substrate **20**. However, the inter-substrate conductive material **30** mixed with the sealing material **31** is interposed between the first surface **11** of the first substrate **10** and the first surface **21** of the second substrate **20** to electrically connect the third electrodes **18** and **19** formed on the first surface **21** of the second substrate **20** to the wiring pattern (not shown) formed on the first surface **11** of the first substrate **10**. Therefore, the inter-substrate conductive material **30** and the wiring pattern make it possible to output signals from the third electrodes **18** and **19** to the flexible substrate **33**. In the capacitance type input area **102**, a transmissive shield layer **16** composed of an ITO film is formed on the first surface **11** of the first substrate **10**.

[0070] In the capacitance type input area **102**, an insulating high refractive index material **14**, such as methacrylate resin, is filled between the first substrate **10** and the second substrate **20**. The high refractive index material **14** is a liquid material that is injected through an opening of the sealing material **31**, or it is a hardened material of the injected liquid material. After the liquid material is injected, the opening of the sealing material **31** is sealed.

[0071] A sheet **91** is provided on the input operation side of the touch panel **1** having the above-mentioned structure, and a light shielding layer **92** is formed in a frame shape on the inner surface of the sheet **91** (one surface of the sheet **91** facing the touch panel **1**). However, in this embodiment, the light shielding layer **92** is formed in only an area overlapping the sealing material **31**, and serves as only a frame.

[0072] Therefore, the light shielding layer **92** is not formed in an area overlapping the capacitance type input area **102** and the resistive film type input area **101**. Therefore, both the capacitance type input area **102** and the resistive film type input area **101** serve as transmissive areas. In addition, in the liquid crystal display device **5**, the entire area overlapping the capacitance type input area **102** and the resistive film type input area **101** serves as an image display area **5***b*. Therefore, in the display device **100** with an input function according to this embodiment, it is possible for a viewer to view the image displayed by the liquid crystal display device **5** from the input operation side through both the resistive film type input area **101** and the capacitance type input area **102**. Since the light shielding layer **92** serves as a frame of the capacitance type input area **102** and the resistive film type input area **101**, it is possible to prevent the sealing material **31** of the touch panel **1** and a wiring pattern (not shown) provided in the vicinity of the sealing material from being viewed from the input operation side. In addition, the light shielding layer **92** divides images displayed in the capacitance type input area **102** and the resistive film type input area **101**. Therefore, since the capacitance type input area **102** and the resistive film type input area **101** are visually divided from each other, the operator can recognize that the capacitance type input area **102** and the resistive film type input area **101** have different functions, which makes it possible to improve operability. The other structures are substantially the same as those in the first embodiment, and thus a description thereof will be omitted.

[0073] In the display device **100** with an input function having the above-mentioned structure, similar to the first and second embodiments, since the resistive film type input area **101** and the capacitance type input area **102** are separated from each other in plan view, it is possible to obtain the same effects as those in the first and second embodiments, such as improvement in usability.

[0074] Furthermore, similar to the second embodiment, the third electrodes **18** and **19** forming the capacitance type input area **102** are formed on the second substrate **20** on which the second electrode **25** forming the resistive film type input area **101** is formed. Therefore, it is possible to reduce manufacturing costs, as compared to a structure in which a resistive film type touch panel and a capacitance type touch panel that are separately manufactured and arranged in a plane. That is, it is possible to obtain the same effects as those in the first and second embodiments.

[0075] Further, it is possible to view the image displayed by the liquid crystal display device **5** from the input operation side through both the capacitance type input area **102** and the resistive film type input area **101**. Therefore, it is possible to input information in both the capacitance type input area **102** and the resistive film type input area **101**, while viewing the image displayed by the liquid crystal display device **5** from the input operation side. In this case, an insulating high refractive index material **14** is also filled between the first substrate **10** and the second substrate **20** in the capacitance type input area **102**. Therefore, there is no reflective interface and thus it is possible to display an image with high brightness.

Fourth Embodiment

[0076] In the first to third embodiments, the first substrate **10** is larger than the second substrate **20**. However, in this embodiment, as will be described below with reference to FIG. **5**, the first substrate **10** is smaller than the second substrate **20**. In addition, in the first to third embodiments, each of the resistive film type input area **101** and the capacitance type input area **102** is surrounded by the sealing material **31**. However, in this embodiment, as will be described below with reference to FIG. **5**, the resistive film type input area **101** is surrounded by the sealing material **31**, but the capacitance type input area **102** is not surrounded by the sealing material **31**.

[0077] FIG. **5** is a cross-sectional view schematically illustrating the structure of a display device **100** with an input function according to the fourth embodiment of the invention. The basic structure of this embodiment is the same as that in the first and second embodiments. Therefore, in the fourth embodiment, the same components as those in the first and second embodiments are denoted by the same reference numerals, and a description thereof will be omitted.

[0078] As shown in FIG. **5**, in this embodiment, similar to the first and second embodiments, the display device **100** with an input function includes a liquid crystal display device **5** and a touch panel **1** that is provided on one surface of the liquid crystal display device **5** from which display light is emitted. In addition, in the touch panel **1**, an input area **100***a* includes a resistive film type input area **101** and a capacitance type input area **102**, which will be described below, and the resistive film type input area **101** and the capacitance type input area **102** are separated from each other in plan view.

[0079] In this embodiment, the first substrate **10** is smaller than the second substrate **20**, and a flexible substrate **33** is connected to the end of the first surface **11** of the first substrate **10**. Therefore, the flexible substrate **33** is connected to the first surface **11** of the first substrate **10** at a position facing the second substrate **20**.

[0080] The sealing material **31** is formed so as to surround only the resistive film type input area **101**, but the capacitance type input area **102** is not surrounded by the sealing material **31**.

[0081] In this embodiment, similar to the first embodiment, an inter-substrate conductive material **30** mixed with the sealing material **31** is interposed between the first surface **11** of the first substrate **10** and the first surface **21** of the second substrate **20**, and electrically connects the second electrode **25** formed on the first surface **21** of the second substrate **20** and a wiring pattern (not shown) formed on the first surface **11** of the first substrate **10**. The inter-substrate conductive material **30** and the wiring pattern make it possible to output signals from the second electrode **25** to the flexible substrate **33**.

[0082] In this embodiment, in the capacitance type input area **102**, the third transmissive electrodes **18** and **19** are formed on the first surface of the second substrate **20**. However, the inter-substrate conductive material **30** mixed with the sealing material **31** is interposed between the first surface **11** of the first substrate **10** and the first surface **21** of the second substrate **20** to electrically connect the third electrodes **18** and **19** formed on the first surface **21** of the second substrate **20** to the wiring pattern (not shown) formed on the first surface **11** of the first substrate **10**. Therefore, the inter-substrate conductive material **30** and the wiring pattern make it possible to output signals from the third electrodes **18** and **19** to the flexible substrate **33**.

[0083] A sheet **91** is provided on the input operation side of the touch panel **1** having the above-mentioned structure, and a light shielding layer **92** is formed in a frame shape on the inner surface of the sheet **91** (one surface of the sheet **91** facing the touch panel **1**). The light shielding layer **92** is formed in an area overlapping the capacitance type input area **102**, but is not formed in an area overlapping the resistive film type input area **101**. Therefore, the capacitance type input area **102** serves as a light shielding area, and the resistive film type input area **101** serves as a transmissive area. Therefore, in the display device **100** with an input function according to this embodiment, it is possible for a viewer to view the image displayed by the liquid crystal display device **5** from the input operation side through the resistive film type input area **101**. In the capacitance type input area **102**, a symbol indicating a cursor key **95** is printed on the outer surface of the sheet **91** (the surface on the input operation side). The other structures are substantially the same as those in the first, second, and fourth embodiments, and thus a description thereof will be omitted.

[0084] In the display device **100** with an input function having the above-mentioned structure, similar to the first and second embodiments, since the resistive film type input area **101** and the capacitance type input area **102** are separated from each other in plan view, it is possible to obtain the same effects as those in the first and second embodiments, such as improvement in usability.

[0085] Furthermore, the third electrodes **18** and **19** forming the capacitance type input area **102** are formed on the second substrate **20** on which the second electrode **25** forming the resistive film type input area **101** is formed. Therefore, it is possible to reduce manufacturing costs, as compared to a structure in which a resistive film type touch panel and a capacitance type touch panel are separately manufactured and arranged in a plane. That is, it is possible to obtain the same effects as those in the first and second embodiments.

Fifth Embodiment

[0086] In the first to fourth embodiments, the flexible substrate **33** connected to the first substrate **10** is used to output signals from the resistive film type input area **101** and the capacitance type input area **102** to the outside. However, as will be described below with reference to FIG. **6**, in this embodiment, the flexible substrate **33** connected to the first substrate **10** is used to output signals from the first electrode **15** of the resistive film type input area **101** to the outside, and a flexible substrate connected to the second substrate **20** is used to output signals from the capacitance type input area **102** to the outside.

[0087] FIG. **6** is a cross-sectional view schematically illustrating the structure of a display device **100** with an input function according to the fifth embodiment of the invention. The basic structure of this embodiment is the same as that in the first, second, and fourth embodiments. Therefore, in the fifth embodiment, the same components as those in the first, second, and fourth embodiments are denoted by the same reference numerals, and a description thereof will be omitted.

[0088] As shown in FIG. **6**, in this embodiment, similar to the first and second embodiments, the display device **100** with an input function includes a liquid crystal display device **5** and a touch panel **1** that is provided on one surface of the liquid crystal display device **5** from which display light is emitted. In addition, in the touch panel **1**, an input area **100*a*** includes a resistive film type input area **101** and a capacitance type input area **102**, which will be described below, and the resistive film type input area **101** and the capacitance type input area **102** are separated from each other in plan view.

[0089] In this embodiment, a sealing material **31** is formed so as to surround only the resistive film type input area **101**, but the capacitance type input area **102** is not surrounded by the sealing material **31**. In addition, no inter-substrate conductive material is mixed with the sealing material **31**.

[0090] In this embodiment, the first substrate **10** is smaller than the second substrate **20**, and the flexible substrate **33** is connected to the end of the first surface **11** of the first substrate **10**. Further, in this embodiment, a flexible substrate **34** is connected to the end of the first surface **21** of the second substrate **20**.

[0091] In this embodiment, similar to the first embodiment, in the resistive film type input area **101** of the touch panel **1** having the above-mentioned structure, the first transmissive electrode **15** that is composed of an ITO film is formed on the first surface **11** of the first substrate **10**, and the second transmissive electrode **25** that is composed of an ITO film is formed on the first surface **21** of the second substrate **20**. In addition, an air layer is provided therebetween. A wiring pattern (not shown) is formed on the first surface **11** of the first substrate **10** so as to extend from the first electrode **15** to a connection region of the flexible substrate **33**, and the wiring pattern makes it possible to output signals from the first electrode **15** to the flexible substrate **33**.

[0092] Further, the second electrode **25** is formed on the first surface **21** of the second substrate **20**, and a wiring pattern (not shown) is formed on the first surface **21** of the first substrate **20** so as to extend from the second electrode **25** to a connection region of the flexible substrate **34**. Therefore, the wiring pattern and the flexible substrate **34** make it possible to output signals from the second electrode **25** to the outside. Alternatively, an inter-substrate conductive material **30** mixed with the sealing material **31** may connect the second electrode **25** formed on the first surface **21** of the second substrate **20** to a wiring pattern (not shown) formed on the

first surface **11** of the first substrate **10**, thereby outputting signals from the second electrode **25** to the flexible substrate **33**.

[0093] In the capacitance type input area **102**, the third transmissive electrodes **18** and **19** are formed on the first surface **21** of the second substrate **20**. However, a wiring pattern (not shown) is formed on the first surface **21** of the second substrate **20** so as to extend from the third electrodes **18** and **19** to a connection region of the flexible substrate **34**, and the wiring pattern and the flexible substrate **34** make it possible to output signals from the third electrodes **18** and **19** to the outside. The other structures are substantially the same as those in the first and second embodiments, and thus a description thereof will be omitted.

[0094] In the display device **100** with an input function having the above-mentioned structure, similar to the first and second embodiments, the resistive film type input area **101** and the capacitance type input area **102** are separated from each other in plan view. Therefore, it is possible to obtain the same effects as those in the first and second embodiments, such as improvement in usability.

[0095] Furthermore, the third electrodes **18** and **19** forming the capacitance type input area **102** are formed on the second substrate **20** on which the second electrode **25** forming the resistive film type input area **101** is formed. Therefore, it is possible to reduce manufacturing costs, as compared to a structure in which a resistive film type touch panel and a capacitance type touch panel that are separately manufactured are arranged in a plane. That is, it is possible to obtain the same effects as those in the first and second embodiments.

Sixth Embodiment

[0096] FIG. **7** is a cross-sectional view schematically illustrating the structure of a display device with an input function according to a sixth embodiment of the invention. In the first to fifth embodiments, the sheet **91** is provided on the input operation side of the touch panel **1**. However, as shown in FIG. **7**, when the sheet **91** is fixed to the touch panel **1**, the sheet **91** may be adhered to the input operation side of a frame **90** surrounding the touch panel **1**, and the sheet **91** may be adhered to the touch panel **1** by an adhesive **96**. According to this structure, it is possible to implement a display device with an input function having various shapes according to the shape of the frame **90**, regardless of the shape of the touch panel **1** in a plan view. For example, it is possible to implement a display device with an input function having R-shaped corners.

[0097] Although not shown in FIG. **7**, a first polarizing plate **81** may be fixed to the sheet **91** shown in FIG. **7** by an adhesive, thereby arranging the first polarizing plate **81** on the input operation side of the touch panel **1**. In this case, the first polarizing plate **81** arranged between the touch panel **1** and the liquid crystal display device **5** is omitted.

Seventh Embodiment

[0098] FIG. **9** is a cross-sectional view schematically illustrating the structure of a display device with an input function according to a seventh embodiment of the invention. In the first to sixth embodiments, the first substrate **10** of the touch panel **1** is arranged separately from the element substrate **50** of the liquid crystal panel **5**. However, as shown in FIG. **9**, the first substrate **10** of the touch panel **1** may also serve as the element substrate **50** of the liquid crystal panel **5**. According to this structure, it is possible to reduce the overall thickness of the display device **100** with an input function. In this structure, the first polarizing plate (not shown) that has been arranged between the first substrate **10** and the element substrate **50** of the liquid crystal panel **5** is provided on the front surface or the rear surface of a base **40**.

[0099] When the sheet **91** is configured to have the function of the first polarizing plate **81**, that is, when the sheet **91** also serves as the first polarizing plate **81**, it is possible to omit the first polarizing plate **81**. Therefore, it is possible to further reduce the thickness of the display device **100** with an input function. The other structures are substantially the same as those in the third embodiment, and thus a description thereof will be omitted.

Other Structures

[0100] The first to seventh embodiments are configured such that the user scrolls the screen in the capacitance type input area **102** and inputs information with a pen in the resistive film type input area **101**. However, the invention is not limited thereto. For example, the following structure may be used: the user moves a cursor in the resistive film type input area **101** and inputs formation in the capacitance type input area **102**. In addition, the following structure may be used: the resistive film type input area **101** is in an off state in a normal mode; and when the approach of a finger is detected by the capacitance type input area **102**, the resistive film type input area **101** is turned on.

[0101] In the first to seventh embodiments, the liquid crystal display device **5** is used as an image generating device, but the invention is not limited thereto. For example, an organic electroluminescent device or a plasma display device may be used as the image generating device.

Examples of Electronic Apparatuses Provided with Display Device with Input Function

[0102] Next, electronic apparatuses provided with the display device **100** with an input function according to the above-described embodiments will be described. FIG. **8**A shows the structure of a mobile personal computer provided with the display device **100** with an input function. A personal computer **2000** includes the display device **100** with an input function, serving as a display unit, and a main body **2010**. The main body **2010** is provided with a power switch **2001** and a keyboard **2002**. FIG. **8**B shows the structure of a mobile phone provided with the display device **100** with an input function. A mobile phone **3000** includes a plurality of operating buttons **3001**, scroll buttons **3002**, and the display device **100** with an input function serving as a display unit. The scroll buttons **3002** are operated to scroll the screen displayed on the display device **100** with an input function. FIG. **8**C shows the structure of a personal digital assistant (PDA) provided with the display device **100** with an input function. A personal digital assistant **4000** includes a plurality of operating buttons **4001**, a power switch **4002**, and the display device **100** with an input function serving as a display unit. When the power switch **4002** is turned on, various information items, such as an address book and a schedule, are displayed on the display device **100** with an input function.

[0103] In addition to the electronic apparatuses shown in FIGS. **8**A to **8**C, the display device **100** with an input function can be applied to various electronic apparatuses, such as a digital still camera, a liquid crystal television, a viewfinder-type or a monitor-direct-view-type video recorder, a navigation apparatus, a pager, an electronic organizer, a calculator, a

word processor, a workstation, a video telephone, a POS terminal, and a banking terminal. The display device **100** with an input function can be used as display units of these electronic apparatuses.

What is claimed is:

1. A touch panel comprising:

a first substrate having a first surface and a second surface;

a second substrate having a first surface and a second surface;

a first electrode that is formed on the first surface of the first substrate;

a second electrode that is formed on the first surface of the second substrate;

a resistive film type input area in which the first electrode of the first substrate and the second electrode of the second substrate face each other; and

a capacitance type input area in which third electrodes are formed on at least one of the first substrate and the second substrate,

wherein the resistive film type input area and the capacitance type input area are separated from each other in plan view.

2. The touch panel according to claim **1**,

wherein the third electrodes are formed on the first surface of the first substrate or the first surface of the second substrate.

3. The touch panel according to claim **2**,

wherein a wiring member that outputs signals from the resistive film type input area and the capacitance type input area to the outside is connected to one of the first surface of the first substrate and the first surface of the second substrate on which the third electrodes are formed.

4. The touch panel according to claim **2**,

wherein a wiring member that outputs signals from the resistive film type input area and the capacitance type input area to the outside is connected to one of the first surface of the first substrate and the first surface of the second substrate on which the third electrodes are not formed, and

an inter-substrate conductive material that outputs signals from the capacitance type input area to the outside is provided between the first surface of the first substrate and the first surface of the second substrate.

5. The touch panel according to claim **3**,

wherein the wiring member is connected to the first surface of the first substrate.

6. A display device with an input function comprising:

the touch panel according to claim **1**; and

an image generating device that is provided on one surface of the first substrate of the touch panel opposite to the second substrate.

7. The display device with an input function according to claim **6**,

wherein at least one of the resistive film type input area and the capacitance type input area is a transmissive input area, and

the image generating device includes an image display area that overlaps the transmissive input area.

8. The display device with an input function according to claim **6**,

wherein both the resistive film type input area and the capacitance type input area are transmissive input areas, and

the image generating device includes an image display area that overlaps both the transmissive input areas.

9. The display device with an input function according to claim **6**,

wherein the image generating device includes a pair of substrates and an electro-optical material that is interposed between the pair of substrates, and

the first substrate also serves as one of the pair of substrates.

10. An electronic apparatus comprising the display device with an input function according to claim **6**.

* * * * *