Paper No. 1

UNITED STATES PATENT AND TRADEMARK OFFICE

BEFORE THE PATENT TRIAL AND APPEAL BOARD

APPLE INC.,
Petitioner,

v.

OMNI MEDSCI, INC.,
Patent Owner.

Patent No. 9,651,533

Inter Partes Review No. IPR2019-00916

Petition for *Inter Partes* Review of
U.S. Patent No. 9,651,533

Table of Contents

I. Introduction 1

II. Certification; Grounds 2

A. Petitioner May Contest the ’533 Patent (§ 42.104(a)) 2

B. Identification of Claims Being Challenged (§ 42.104(b)) 3

C. Fee for *Inter Partes* Review (§ 42.15(a)) 3

D. Service on Patent Owner (§ 42.105) 3

III. Background Technology 4

A. Photoplethysmography 4

B. Prevailing Industry Trends Before 2012 6

IV. The ’533 Patent 12

A. The ’533 Patent Is Subject to AIA 12

B. File History 16

C. Person of Ordinary Skill in the Art 16

V. Claim Construction 17

VI. Detailed Explanation Why the ’533 Patent Claims Are Unpatentable 20

A. Lisogurski in View of Carlson Renders Obvious Claims 5, 7-10, 13, and 15-17 21

1. Overview of Lisogurski 21
2. Overview of Carlson 23
3. A Skilled Person Would Have Modified Lisogurski to Incorporate Elements Shown in Carlson 24
4. Theoretical Distinctions Between Lisogurski and Independent Claims 5, 7-9, 13, and 15-17 26
5. Comparison of Claim 13 to Lisogurski and Carlson 28
   a) Preamble 28
   b) “a wearable measurement device…” 28

c) "the light source configured to increase signal-to-noise ratio" 30

d) "the wearable measurement device comprising a plurality of lenses configured to receive a portion of the output optical beam and to deliver an analysis output beam to a sample" 39

e) "the wearable measurement device further comprising a receiver configured to receive and process at least a portion of the analysis output beam reflected or transmitted from the sample and to generate an output signal, wherein the wearable measurement device receiver is configured to be synchronized to pulses of the light source" 44

f) "a personal device…" 49

g) "a remote device…" 53

6. Comparison of Claim 5 to Lisogurski and Carlson 55

a) Preamble 55

b) "a light source comprising a plurality of … light emitting diodes …" 56

c) "the light source configured to increase signal-to-noise ratio…." 56

d) "an apparatus comprising a plurality of lenses configured to receive a portion of the output optical beam and to deliver an analysis output beam to a sample" 56

e) "a receiver configured to receive and process at least a portion of the analysis output beam reflected or transmitted from the sample and to generate an output signal, wherein the receiver is configured to be synchronized to pulses of the light source" 56

f) "a personal device…" 57

g) "a remote device configured to receive over the wireless transmission link an output status comprising the at least a portion of the processed output signal, to process the received output status to generate processed data and to store the processed data." 57

7. Comparison of Dependent Claims to Lisogurski and Carlson .58

a) Transmitting GPS and Time Data as Specified in Claims 7 and 13 Would Have Been Obvious from Carlson.....58

b) Claims 8 and 16 60

c) Claims 9 and 17 62

d) Claim 10 63

B. Lisogurski, Carlson, and Mannheimer Render Obvious Claims 8-9 and 16-17 63

1. Overview of Mannheimer 64

2. A Skilled Person Would Have Modified Lisogurski and Carlson to Incorporate Elements Shown in Mannheimer.....64

a) Claims 8 and 16 66

b) Claims 9 and 17 68

C. No Secondary Considerations Exist.....69

VII. Conclusion 70

Claim Appendix 1

TABLE OF AUTHORITIES

Cases **Page(s)**

*Droplets, Inc. v. E*TRADE Bank*,
887 F.3d 1309 (Fed. Cir. 2018) 15

Hologic, Inc. v. Smith & Nephew, Inc.,
884 F.3d 1357 (Fed. Cir. 2018) 13

Lockwood v. American Airlines,
107 F.3d 1565 (1997) 13

Sinorgchem Co., Shandong v. Int'l Trade Comm'n,
511 F.3d 1132 (Fed. Cir. 2007) 18

Statutes

35 U.S.C. § 102 23

35 U.S.C. § 103 3

35 U.S.C. § 112 13

35 U.S.C. § 315(b) 3

Other Authorities

37 C.F.R. 1.57(d) 15

37 CFR § 42.15(a) 3

M.P.E.P. 2159.02 13

Exhibit List

Exhibit #	Reference Name
1001	U.S. Patent No. 9,651,533
1002	U.S. Patent No. 9,651,533 File History
1003	Declaration of Brian W. Anthony, PhD
1004	Proof of Service of Summons in Omni MedSci, Inc. v. Apple Inc., No. 2:18-cv-134 (E.D. Tex.)
1005	U.S. Patent Publication No. 2012/0197093 ("Valencell '093")
1006	U.S. Patent Publication No. 2010/0217099 ("Valencell '099")
1007	U.S. Patent No. 6,505,133 ("Hanna")
1008	U.S. Patent No. 5,746,206 ("Mannheimer")
1009	U.S. Patent Publication No. 2005/0049468 ("Carlson")
1010	U.S. Patent No. 9,596,990 ("Park")
1011	U.S. Patent No. 9,241,676 ("Lisogurski")
1012	RESERVED
1013	RESERVED
1014	U.S. Patent No. 8,172,761 ("Rulkov")
1015	U.S. Provisional Application No. 61/747,487
1016	U.S. Provisional Application No. 61/747,472
1017	U.S. Provisional Application No. 61/747,477
1018	U.S. Provisional Application No. 61/754,698
1019	"The Biomedical Engineering Handbook," by Joseph D. Bronzino (1995) ("BE Handbook")
1020	M. Kranz, et al., The mobile fitness coach: Towards individualized skill assessment using personalized mobile devices, Pervasive and Mobile Computing (June 2012)

Exhibit #	Reference Name
1021	Patel, et al., A review of wearable sensors and systems with application rehabilitation, Journal of Neuroengineering & Rehabilitation (2012)
1022	ScienceDirect Report on M. Kranz, et al., The mobile fitness coach: Towards individualized skill assessment using personalized mobile devices, Pervasive and Mobile Computing (2012), available at https://www.sciencedirect.com/science/article/pii/S1574119212000673?via%3Dihub
1023	"The Usage of Tablets in the HealthCare Industry," by Rauf Adil, available at https://www.healthcareitnews.com/blog/usage-tablets-healthcare-industry (Aug. 2, 2012)
1024	A. More, Bluetooth Low Enegery: Wireless Connectivity for Medical Monitoring, Journal of Diabetes Science & Technology (Mar. 2010)
1025	1. Absorption Coefficient and Penetration Depth, available at https://eng.libretexts.org/Bookshelves/Materials_Science/Supplemental_Modules_(Materials_Science)/The_Science_of_Solar (Accessed October 29, 2018)
1026	Buttussi, Fabio, Chittaro, Luca, MOPET: A context-aware and user-adaptive wearable system for fitness training (2008)
1027	P. Baum, et al., Strategic Intelligence Monitor on Personal Health Systems, Phase 2: Market Developments - Remote Patient Monitoring and Treatment, Telecare, Fitness/Wellnes and mHealth, JRC Scientific and Policy Reports of European Commission (2013)
1028	Compendium of Chemical Terminology Gold Book Version 2.3.3, February 24, 2014
1029	M. Swan, Senior Mania! The Internet of Things, Wearable Computing, Objective Metrics, and the Quantified Self 2.0, Journal of Sensor and Actuator Networks (2012)
1030	Merriam-Webster's Collegiate Dictionary, Eleventh Edition
1031	U.S. Patent Publication No. 2012/0041767 ("Hoffman")
1032	U.S. Patent No. 7,278,966 ("Hjelt")
1033	Lister et al., Optical properties of human skin (Journal of Biomedical Optics 2012)
1034	Bashkatov et al., Optical properties of human skin, subcutaneous and mucous tissues in the wavelength range from 400 to 2000 nm, Journal of Physics D: Applied Physics (2005)

Exhibit #	Reference Name
1035	E.F. Schubert, Light-Emitting Diodes (Cambridge Univ. Press, 2nd ed. reprinted 2014)
1036	Barolet, Daniel, Light-Emitting Diodes (LEDs) in Dermatology (Seminars in Cutaneous Medicine and Surgery 2008)
1037	RESERVED
1038	RESERVED
1039	Omni MedSci Inc.'s Opening Claim Construction Brief, No. 2:18-cv-134-RWS (filed December 20, 2018)
1040	Apple Inc.'s Preliminary Claim Constructions and Extrinsic Evidence Pursuant to Patent Local Rule 4-2, No. 2:18-cv-134-RWS (filed November 1, 2018)
1041	Exhibit E from , Excerpts from the American Heritage Dictionary, 5th Edition, filed January 14, 2019, No. 2:18-cv-134-RWS
1042	Exhibit O, Excerpts from the American Heritage Dictionary, 5th Edition. Filed January 14, 2019. No. 2:18-cv-134-RWS
1043	Amended Joint Claim Construction and Prehearing Statement. Filed January 11, 2019. No. 2:18-cv-134-RWS
1044	Claim Construction Markman Hearing Transcript, February 6, 2019. No. 2:18-cv-134-RWS
1045	Omni Preliminary Proposed Claim Constructions Pursuant to P.R. 4-2. Served on November 1, 2018. Case No. 2:18-cv-134-RWS
1046	Exhibit G, Excerpts from Merriam-Webster's Collegiate Dictionary, Eleventh Edition, No. 2:18-cv-134-RWS
1047	Exhibit N, Excerpts from Merriam-Webster's Collegiate Dictionary, Eleventh Edition, No. 2:18-cv-134-RWS
1048	U.S. Patent No. 6,044,283 ("Fein")
1049	U.S. Patent No. 5,774,213 ("Trebino")
1050	U.S. Patent No. 5,855,550 ("Lai")
1051	U.S. Patent No. 6,898,451 ("Wuori")
1052	U.S. Patent No. 4,972,331 ("Chance")
1053	Curriculum Vitae of Brian W. Anthony, PhD
1054	Dr. Mohammed Islam, Faculty Profile, University of Michigan, College of Engineering (available at https://islam.engin.umich.edu)

Exhibit #	Reference Name
1055	Technology Transfer Policy, University of Michigan (available at https://techtransfer.umich.edu/for-inventors/policies/technology-transfer-policy/)
1056	Bylaws of the University of Michigan Board of Regents, (available at http://www.regents.umich.edu/bylaws/bylawsrevised_09-18.pdf)

Petitioner's Mandatory Notices

A. Real Party in Interest (§42.8(b)(1))

The real party in interest of this petition pursuant to § 42.8(b)(1) is Apple Inc. ("Apple") located at One Infinite Loop, Cupertino, CA 95014.

B. Other Proceedings (§42.8(b)(2))

1. Patents and Applications

U.S. Patent No. 9,651,533 ("'533 patent") is related to following issued patents or pending applications:

- U.S. Patent No. 9,164,032
- U.S. Appl. No. 15/594,053
- U.S. Appl. No. 16/015,737

2. Related Litigation

The '533 patent has been asserted in the following litigations:

- *Omni MedSci, Inc. v. Apple Inc.*, Action No. 2-18-cv-00134-RWS (pending).

3. Patent Office Proceedings

The '533 patent is subject to IPR2019-00913, filed by Apple.

C. Lead and Backup Lead Counsel (§42.8(b)(3))

Lead Counsel is: Jeffrey P. Kushan (Reg. No. 43,401), jkushan@sidley.com, (202) 736-8914. Back-Up Lead Counsel are: Ching-Lee Fukuda (Reg. No.

44,334), clfukuda@sidley.com, (212) 839-7364; Kathi Cover (Reg. No. 37,803), kcover@sidley.com, (202) 736-8377; Thomas A. Broughan III (Reg. No. 66,001), tbroughan@sidley.com, (202) 736-8314; and Sharon Lee (*pro hac vice* to be submitted), sharon.lee@sidley.com, (202) 736-8510.

D. **Service Information (§42.8(b)(4))**

Service on Petitioner may be made by e-mail (iprnotices@sidley.com), mail or hand delivery to: Sidley Austin LLP, 1501 K Street, N.W., Washington, D.C. 20005. The fax number for lead and backup lead counsel is (202) 736-8711.

I. Introduction

Health monitoring systems based on optical sensors, which measure physiological parameters of a user based on how light interacts with the user's tissue and blood, have been ubiquitous for decades. Once found only in hospitals and doctor's offices, these systems are now mainstream consumer devices. Over time, they evolved to become smaller, digital, wireless, and Internet-connected, an evolution driven by several market trends and forces. One sought to meet the needs and convenience of users for such devices to be wearable, unobtrusive, and mobile. Another addressed the need to integrate these devices into a digital data processing environment based on real-time collection and delivery of user data. A third responded to consumer demand for personal health and fitness monitoring devices.

The '533 patent likewise claims systems that use optical sensors to measure a physiologic parameter of a person. They recite as their components what a well-known textbook describes as the "basic building blocks" of optical sensors (Ex.1019 ("BE Handbook"), 765) and employ what the patent itself calls "mature technologies from the telecommunications and fiber optics industry" (Ex.1001, 2:21-23). The claimed systems combine these conventional and common components, including multiple light emitting diodes (LEDs) that generate light at least in the near-infrared range, lenses for directing the light to the skin, a receiver,

a personal device that receives and processes the output signal and wirelessly communicates it to a remote device, and standard signal processing techniques.

For example, U.S. 9,241,676 ("Lisogurski") describes an optical monitor with an LED-based sensor that measures heart rate using various signal processing techniques to extract accurate physiological information from a noisy signal, including increasing both the intensity and the pulse rate of the LEDs. Other prior art, such as Carlson (Ex.1009), describes conventional techniques used in such optical monitors—such as the use of lenses—that a skilled person would have found obvious to use in the analogous devices described in Lisogurski.

Each contested claim of the '533 patent, thus, is unpatentable, and Petitioner respectfully requests that trial be instituted and that these claims be cancelled.

II. Certification; Grounds

A. Petitioner May Contest the '533 Patent (§ 42.104(a))

Petitioner certifies that the '533 patent is available for *inter partes* review (IPR). Petitioner also certifies it is not barred or estopped from requesting IPR of the '533 patent claims. Neither Petitioner, nor any party in privity with Petitioner, has filed a civil action challenging the validity of any claim of the '533 patent. The '533 patent has not been the subject of a prior IPR by Petitioner or a privy of Petitioner.

Petitioner also certifies this IPR petition is timely filed as it is filed less than one year after April 10, 2018, the date Petitioner was first served with a complaint alleging infringement of a claim of the ’533 patent. *See* 35 U.S.C. § 315(b); Ex.1004.

B. Identification of Claims Being Challenged (§ 42.104(b))

Claims 5, 7-10, 13, and 15-17 are unpatentable based on the following grounds.

(i) **Claims 5, 7-10, 13, and 15-17** are rendered obvious under 35 U.S.C. § 103 based on U.S. Patent No. 9,241,676 (“Lisogurski”) (Ex. 1011) and U.S. Patent Pub. 2005/0049468 (“Carlson”) (Ex.1009).

(ii) **Claims 8-9 and 16-17** are rendered obvious based on Lisogurski, Carlson, and U.S. 5,746,206 (“Mannheimer”) (Ex.1008).

C. Fee for *Inter Partes* Review (§ 42.15(a))

The Director is authorized to charge the fee specified by 37 CFR § 42.15(a) to Deposit Account No. 50-1597.

D. Service on Patent Owner (§ 42.105)

Omni MedSci, Inc. is identified as the patent owner of record in the assignment records for the ’533 Patent. The named inventor of ’533 patent, Dr. Islam, has been a member of the faculty of the University of Michigan since 1992. Ex.1054. Based on the University of Michigan Bylaw 3.10 and Technology Transfer Policy, the University of Michigan is the owner of the ’533 patent.

Ex.1055, Ex.1056 at 21-22. Dr. Islam has also purported to assign the patent to Omni MedSci. *Id*. Petitioner has thus served this petition on both the University of Michigan and Omni MedSci.

III. Background Technology

A. Photoplethysmography

Optical health monitors use a sensing technique called photoplethysmography ("PPG") that has been known and used for decades in medical monitoring systems. Ex.1003, ¶37; Ex.1019, 769-76, 1346-55. PPG works by shining light through a person's tissue and measuring the light that is either reflected back or transmitted through the tissue. Ex.1019, 766. Different components of blood and tissue absorb and reflect different wavelengths of light. Ex.1003, ¶38. By measuring how much light is absorbed and its changes over time, a device can calculate the components of the blood and tissue. Ex.1003, ¶38.

For example, hemoglobin (the substance in blood that carries oxygen to cells) reflects more red light when it is oxygenated and absorbs more red light when it is deoxygenated. Ex.1019, 769; *see* Ex.1003, ¶39. Hemoglobin, however, reflects the same amount of infrared (IR) light whether oxygenated or deoxygenated. Ex.1019, 769. If a device measures the absorbed red and IR light multiple times per second, the device can determine: (i) the ratio of oxygenated to deoxygenated hemoglobin (oxygen saturation), and (ii) how the volume of blood in

the tissue changes over time, allowing detection of a person's pulse. Ex.1019, 769, 771; Ex.1003, ¶39.

PPG is an optical technique that uses conventional optical components. Ex.1003, ¶40. The 1995 BE Handbook explains that the "basic building blocks" of optical sensor systems include lenses, mirrors, filters, beam splitters, light sources, fiber optics, and detectors. Ex.1019, 765. As illustrated in the figure below, light is directed through a lens and onto a sample. Ex.1019, 765. The light reflects back from the sample, is filtered, and sensed by a photodetector. *Id.*; Ex.1003, ¶¶41-43. The photodetector outputs a signal proportionate to the measured light intensity, and then analog-to-digital conversion and signal processing are performed to extract data. Ex.1019, 766. To improve the signal-to-noise ratio, the light source is typically modulated, and the detector uses "synchronized lock-in amplifier detection" to isolate signals that occur at the modulation frequency. Ex.1019, 764, 766. This allows the detector to reduce the noise in the detected signal. Ex.1003, ¶¶44-45.

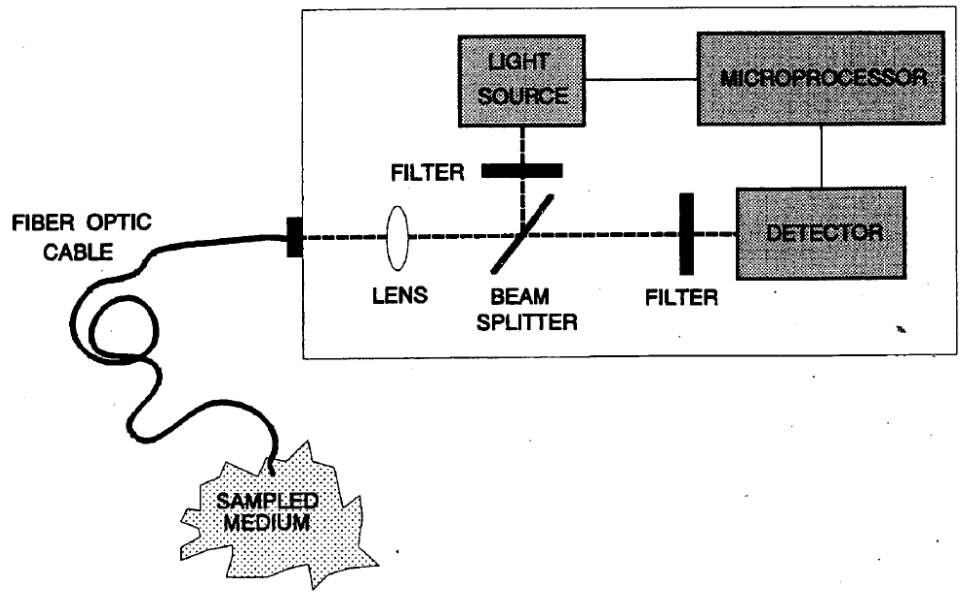

FIGURE 52.1 General diagram representing the basic building blocks of an optical instrument for optical sensor applications.

Portable devices conventionally use light emitting diodes (LEDs) as the light source because LEDs are small and have low power requirements. Ex.1019, 765; Ex.1003, ¶40.

B. Prevailing Industry Trends Before 2012

From 2000 to 2012, several market trends and needs drove the medical device industry to develop wearable, mobile sensor devices that could wirelessly communicate user data to remote devices. Ex.1003, ¶48.

One trend responded to the challenge of providing medical care for patients in their homes or in locations where there was not easy access to a physician. This drove development of wireless monitoring technologies that could be worn by the

patient and used to transmit data to a remote physician or care provider. Ex.1021, 2; Ex.1024, 462; Ex.1027, 15-31; *see* Ex.1003, ¶¶48, 52-53.

Another trend was to bring heart rate sensing devices based on pulsoximetry to the consumer market for personal fitness tracking and other uses. Ex.1003, ¶¶49-50. As a June 2012 review observed:

> A multitude of commercial health devices and sensors, such as oximeters and heart rate monitors, formerly reserved for professional use, are now available and can be connected to smartphones. GPS watches, pedometers and heart rate monitors…

Ex.1020, 3; *see also* Ex.1009, [0004] ("Pulsoximetry measuring devices are also used in sports for control and survey of athletes."); Ex.1029, 221 ("Wristband sensors are a predecessor to smartwatches and remain a successful product category on their own…"); Ex.1005, [0003] ("There is growing market demand for personal health… monitors, for example, for gauging overall health, fitness, metabolism, and vital status during exercise, athletic training…"); Ex.1027, 33, 35.

A third trend sought to take advantage of the miniaturization of electronics and communication technology, which led to the development of smaller, wearable monitoring systems for mobile health and fitness applications. Ex.1021, 3; Ex.1022, 1 *see* Ex.1003, ¶¶51-52.

A fourth trend in the medical industry was to use apps and smartphones to not only deliver care to patients but to give individuals access to health data for

fitness or health issues. This drove integration of miniaturized, network-connected monitoring devices with smartphones and similar devices. Ex.1027, 9-10, 40-49; Ex.1023, 1-2 ("Doctors and nurses were the early adopters of tablets"); Ex.1021, 4; *see* Ex.1023, 5 (One of "the biggest usage of tablets stems from… [p]atient monitoring and data collection…, includ[ing] using the Bluetooth enabled sensor devices and Wi-Fi+ Bluetooth enabled interfaces to patient monitoring devices, to medical instruments that can transmit information to the tablet when in the vicinity."); Ex.1027, 41; *see* Ex.1003, ¶¶51-52. It also led to the prevalent use of cloud-based data transfer and storage of data. Ex.1003, ¶52.

These market trends provided a strong motivation to skilled persons to integrate medical optical sensing techniques into miniaturized wearable consumer devices that communicate wirelessly with smart devices and remote services. Ex.1003, ¶¶49-50. They also led to a proliferation of products using a distributed architecture supporting personal health, sports, and mobile monitoring systems. Ex.1003, ¶53.

One example of this architecture was described in Patel 2012 (Ex. 1021):

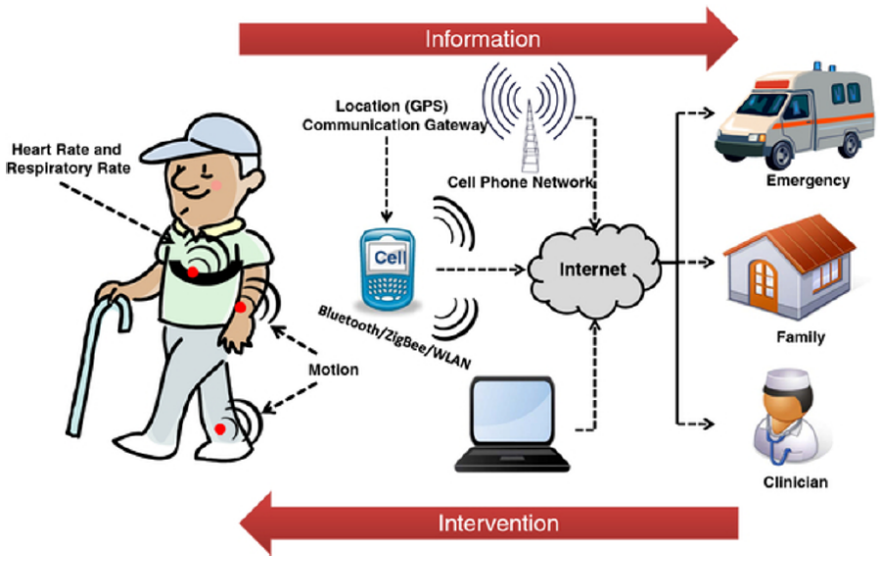

Figure 1 Illustration of a remote health monitoring system based on wearable sensors. Health related information is gathered via body-worn wireless sensors and transmitted to the caregiver via an information gateway such as a mobile phone. Caregivers can use this information to implement interventions as needed.

Ex.1021, 2. As this figure illustrates, data from wearable sensors is transmitted to a cell phone, which in turn transmits the data, along with GPS information, to remote devices used by a clinician or maintained by an emergency responder. The data are also shown being transmitted to and stored in the cloud. Ex.1021, 2, 4.

A 2010 publication described a similar architecture in which "medical data can be sent from a wireless monitor to a cell phone or PC and from there to a remote physician." Ex.1024, 459. As depicted, it comprised three network-interconnected components: (i) the "sensor" device on the person that collected physiological data, (ii) a host device such as a smartphone, tablet, or computer that wirelessly captured and transmitted the physiological data, and (iii) a remote web service accessible over the Internet. Ex.1024, 460; Ex.1003, ¶54.

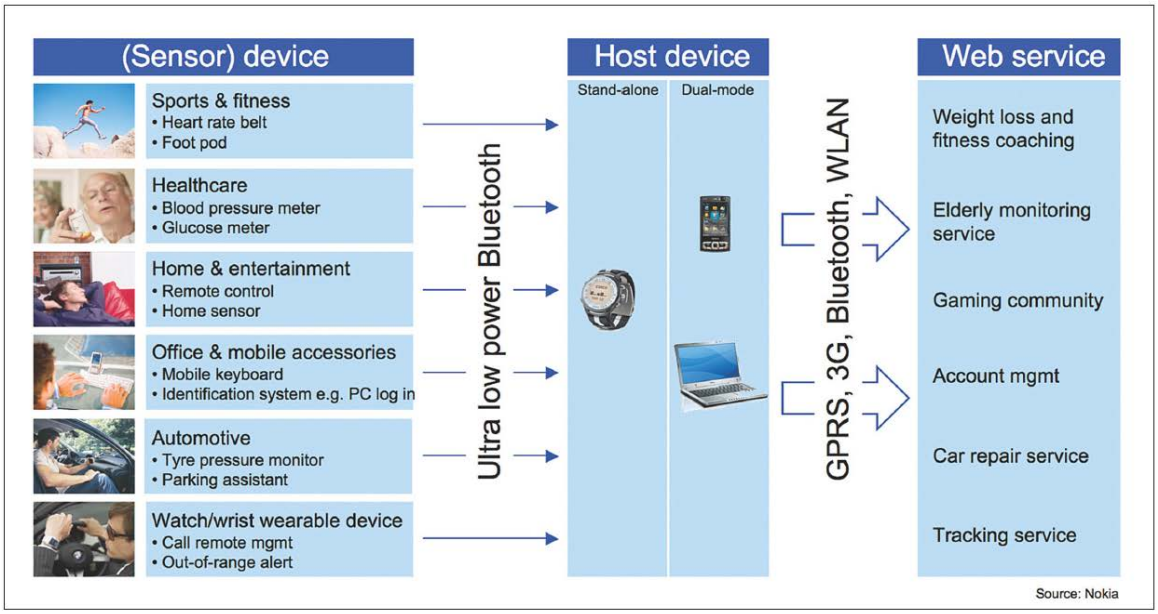

Figure 2. Bluetooth low energy will extend interoperable wireless connectivity to coin-cell-powered wireless sensors in health care, fitness, and related sectors. WLAN, wireless local area network; GPRS, general packet radio service.

Other articles from around 2012 similarly envisioned use of "cloud" based services to support this interconnected scheme. Ex.1003, ¶55. A 2012 article illustrated a cloud-based architecture implemented as a fitness app as follows:

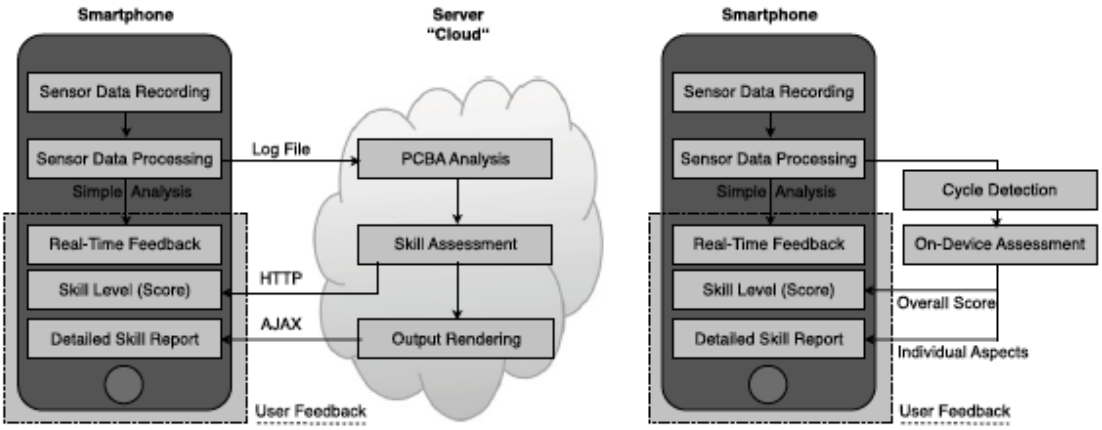

(a) Iteration 1: the smartphone records sensor data during exercising, which are processed by a server after the training to generate skill assessment.

(b) Iteration 2: data is processed on the phone for real-time feedback as well as sophisticated feedback addressing individual aspects after the execution.

Fig. 3. Iterations of the GymSkill application.

Ex.1020, 7. In this example, a smartphone records and processes sensor data, then sends the data to a cloud server for further processing, and then the cloud server returns processed data back to the smartphone for display to the user. Ex.1020, 7; Ex.1020, 6, 12. This same article specifically recognized this type of system could be used with heart rate monitors and optical sensors. Ex.1020, 12 ("Coupling with devices like heart rate monitors using e.g. ANT+ further would increase the sensed database and allow for further, more detailed physical and physiological assessments.").

The wireless, Internet-connected architecture for collecting, processing and returning processed health data reflected in these papers mirrors the analogous wired-device architecture that had been used for decades. Ex.1003, ¶56. For example, the 1995 BE Handbook depicted a remote monitoring system based on wired technology, showing an analogous architecture where data is collected by a wired wearable sensor, transmitted from a home monitor and a landline phone to a remote computer, and used to create reports for physicians to share with a patient. Ex.1019, 1363.

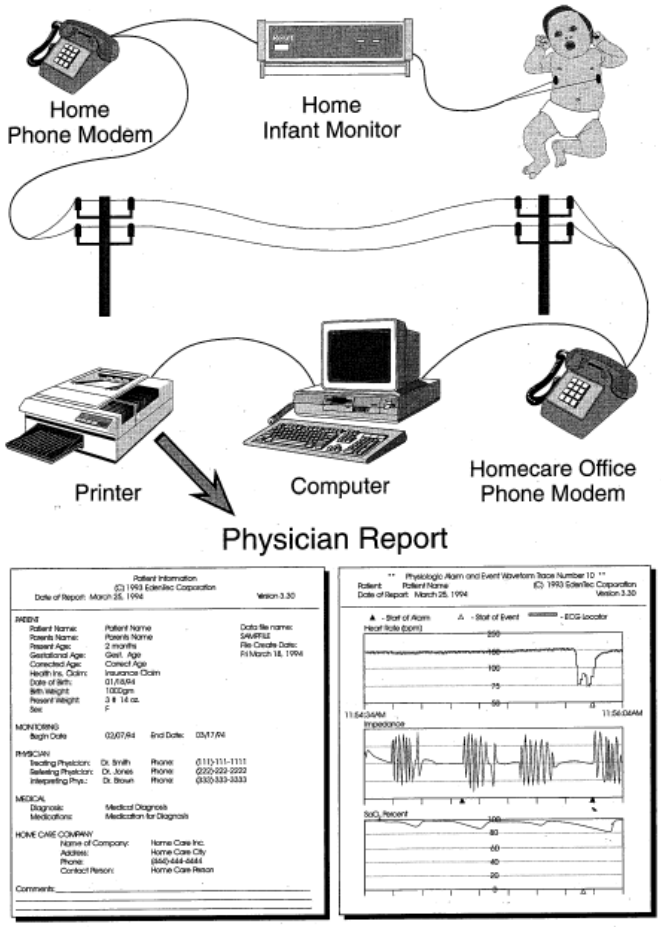

FIGURE 89.3 Infant apnea monitor with memory allows data to be sent by modem to generate physician report (drawing courtesy of EdenTec Corporation).

Ex.1019, 1363.

IV. The ’533 Patent

A. The ’533 Patent Is Subject to AIA

The ’533 patent issued from U.S. Application No. 14/875,709, filed on October 6, 2015, and claims priority to U.S. provisional application No. 61/747,487 (’487 Provisional), filed on December 31, 2012, and the benefit of U.S. Application No. 14/108,986 (’986 Application), filed on December 17, 2013.

Because the contested claims are not entitled to benefit or priority to these earlier filed applications, their effective filing date is not earlier than October 6, 2015.

To be entitled to priority to an earlier filed application, the claimed subject matter must be supported in the manner required by 35 U.S.C. § 112 by the disclosure of the earlier application. *Hologic, Inc. v. Smith & Nephew, Inc.*, 884 F.3d 1357, 1361 (Fed. Cir. 2018). The earlier application's disclosure must establish, *inter alia*, possession of the invention *as it is later claimed*—it is not sufficient for the earlier disclosure to simply make the claimed invention obvious. *Lockwood v. American Airlines*, 107 F.3d 1565, 1572 (1997). In addition, a patent with at least one claim having an effective filing date after March 16, 2013 is subject to the AIA's first-to-file provisions.[1]

Here, because claims 5, 7, 12, and 15 of the '533 patent are not entitled to claim priority to the '487 Provisional, the '533 Patent is subject to the AIA. A review of the '487 provisional and the '986 Application demonstrates why this is so.

Claim 5 requires a "personal device" that "receives and processes" an output signal from a measurement apparatus, and then wirelessly transmits the processed

---

[1] Pub. L. 112-29, §3(n); *see* MPEP 2159.02.

signal to a "remote device."[2] While the '487 Provisional describes a detection system that can send data to "a computational system, comprising computers or other processing equipment," there is no disclosure of the computing system wirelessly sending data it has processed to a remote system for additional processing. Ex.1015, [0066], [0074] (describing a computer system 1811). The '487 provisional also describes a camera that can wirelessly interface with a computer, tablet, or smartphone, but there is no disclosure of those devices sending the camera data to a remote device. Ex.1015, [0068].

Claims 7 and 15 (depending from claims 5 and 13, respectively) specify that the "remote device" transmits: (i) "information related to a time and a position" and (ii) processed data to "a doctor, a healthcare provider, a cloud-based server and one or more designated recipients." The '487 Provisional contains no disclosure of any device transmitting information related to time and position or processed data to a doctor, healthcare provider, or a cloud-based server. Ex.1003, ¶31.

---

[2] Claim 13 contains these same limitations but further specifies additional limitations for the remote device.

Consequently, claims 5, 7, 13, and 15 (and claims depending from them) do not find written description support in the ’487 provisional, and cannot validly claim priority to any application filed before March 16, 2013.[3]

The ’533 patent also states it is “related to” a number of provisional applications other than the only one to which it claims priority, and putatively incorporates them by reference. Ex.1001, 1:15-44. None of those provisionals, however, was the basis of a claim for priority, and “essential matter” (such as support for a claim element) cannot be incorporated by reference from a provisional application, as it is not a “published” application. 37 C.F.R. 1.57(d). Consequently, the ’533 patent can neither claim the benefit of the filing dates of those provisionals nor incorporate by reference their contents into the disclosure of the ’533 patent. *Droplets, Inc. v. E*TRADE Bank*, 887 F.3d 1309, 1319-20 (Fed. Cir. 2018) (holding that incorporation by reference cannot satisfy the “specific reference” requirement under § 120, which governs claiming benefit of earlier filing date).

---

[3] Petitioner does not concede that Patent Owner is entitled to a priority date earlier than the actual filing date of the ’709 application. If Patent Owner presents arguments as to why it believes the claims are entitled to priority to any earlier filed applications, Petitioner reserves its right to respond to that showing.

B. File History

The original claims that became claims 5 and 13 did not recite LEDs as the light source, lenses, how the light source was configured to increase signal-to-noise ratio or synchronizing the receiver to the light source. Ex.1002, 114-118, 499-504, 759-764. The Examiner rejected those original claims as obvious over the prior art, Ex.1002, 343-355, and maintained that rejection after the claims were amended to recite the first three of those elements, Ex.1002, 717-728. The patentee then added the limitation that the receiver "is configured to be synchronized to the light source," and the claims were allowed. Ex.1002, 756, 759-764, 777-785.

C. Person of Ordinary Skill in the Art

A person of ordinary skill in the art ("skilled person") would have a good working knowledge of optical sensing techniques and their applications, and familiarity with optical system design and signal processing techniques. That knowledge would have been gained via an undergraduate education in engineering (electrical, mechanical, biomedical or optical) or a related field of study, along with relevant experience studying or developing physiological monitoring devices (e.g., non-invasive optical biosensors) in industry or academia. Ex.1003, ¶35. This description is approximate; varying combinations of education and practical experience also would be sufficient. *Id.*

Apple's positions regarding how a skilled person would have understood the '533 patent claims and the teachings of the prior art references are supported by the testimony of Brian Anthony, Ph. D., an expert in optical sensing devices who has over 20 years of experience in the field. *Id.*, ¶¶1-9, 36.

V. Claim Construction

The parties in related district court litigation agreed that the claim language should be given its plain and ordinary meaning, except for three terms. For two of those terms, the parties offered alternative constructions and the Court provided a preliminary construction of them. *See* Ex.1043 (the parties' claim constructions), Ex.1045 (preliminary claim construction).[4] For one term, the parties agreed to a construction.

The different constructions impose different scopes on the involved claim limitations, yet the prior art teaches these limitations regardless of which construction is adopted. To avoid any dispute over the scope of the claims as pertinent to patentability, the grounds in this petition use the narrowest

---

[4] The district court has not yet provided a final claim construction order, which is expected to issue in the next few months. Petitioner will file the final claim construction as an exhibit when the order issues.

construction for each disputed claim term.[5] These constructions, explained in more detail below, are faithful to the patentee's lexicography, the specification, and the extrinsic evidence.

A. "Beam"

The claim term "*beam*" is expressly defined in the specification to "refer to photons or light transmitted to a particular location in space." Ex.1001, 8:24-26. This definition should be adopted verbatim as the patentee's chosen lexicography. *Sinorgchem Co., Shandong v. Int'l Trade Comm'n*, 511 F.3d 1132, 1136 (Fed. Cir. 2007) (patentee who acts as his own lexicographer is bound by his definition). The definition is also consistent with extrinsic evidence reflecting that a skilled artisan would understand a "beam" to mean "a collection of nearly parallel rays." [Ex. N at APL-Omni_00076307; *see also* Ex. O at APL-OMNI_00076040]. Such a collection of nearly parallel rays would necessarily travel to a particular location in space, as opposed to scattering in different directions. *See* Ex.1001, 6:57-63 (distinguishing a beam from "stray light from a reflection or scattering"), 15:45-47 (directing an array of beams), (3:37-41) (delivering a beam to a sample), Fig. 12C

---

[5] If Patent Owner contends that special constructions should be used that are different from those it has advanced in the co-pending litigation, Petitioner may request leave to file a reply to such assertions.

and 20:35-50 (showing a beam directed to sample and scattered light reflected from the sample). The district court recognized this point in its preliminary construction, noting that a beam does not include randomly directed light.

Therefore "*beam*" should be construed to mean photons or light transmitted to a particular location in space.

B. "Plurality of lenses"

While a skilled artisan would understand that there are many different kinds of lenses, the only type of lens described by the '533 patent is one that will "collimate or focus the light." Ex.1001, 15:7-8, 12:8-10, 12:39-40, 13:7-9. Consistent with the disclosure of only this type of lens, the claim language specifies that the lenses are "configured to receive and to deliver a portion of the input optical beam to tissue." To perform these claimed functions, the lens must be transparent to the received light so that it can pass through the lens and travel to the tissue. And, in order to deliver the received beam – defined as photons or light transmitted to a particular location in space – the lens must collimate or focus the beam. These defining characteristics of the claimed lens are consistent the Merriam Webster's Collegiate Dictionary definition of lens:

> a piece of transparent material (as glass) that has two opposite regular surfaces either both curved or one curved and the other plane and that is used either singly or combined in an optical instrument for forming an image by focusing rays of light.

Ex.1046 at 712; Ex.1041 at 481 ("[a] piece of glass or other transparent material").

Therefore a "*plurality of lenses*" should be construed to mean two or more transparent surfaces used to collimate (make parallel) or focus rays of light.

C. "pulse rate"

The parties agreed in district court that a skilled artisan would have understood that "*pulse rate*" means "number of pulses of light per unit of time." The specification describes the pulse repetition rate of a light source and measuring the pulsed output rate using Hertz. Ex.1001, 21:55-59 ("a pulse repetition rate between one kilohertz to about 100 MHz or more"), 25:65-26:1. Hertz is the International System of Units unit for frequency or number of cycles per second. Ex.1003, ¶66. Thus, a skilled person would have understood this term to refer to the number of pulses of light per unit of time. Ex.1003, ¶66.

VI. Detailed Explanation Why the '533 Patent Claims Are Unpatentable

Independent claims 5 and 13 each define a measurement system, using substantially similar limitations. There are two primary differences. First, claim 5 specifies the system comprises an apparatus, a personal device, and a remote device, while claim 13 specifies the same three devices but further that the apparatus is a "wearable measurement device." Second, both claims require the remote device to store received output status data, but claim 13 further specifies the remote device is capable of storing a "history" of that data. In other words, because claim 5 fully encompasses systems as they are defined in claim 13, and

prior art suggesting systems that render claim 13 obvious will necessarily render claim 5 obvious. Claim 13 is thus is illustrative, and appears in the attached claim appendix.

Claims 5 and 13, along with the dependent claims, cannot be meaningfully differentiated from the systems described in Lisogurski. As explained below, even theoretical distinctions that Patent Owner may contend exist would not render the claims patentable, particularly when Lisogurski is considered with Carlson, and optionally with Mannheimer.

A. Lisogurski in View of Carlson Renders Obvious Claims 5, 7-10, 13, and 15-17

1. Overview of Lisogurski

Lisogurski was filed on May 31, 2012, and issued on January 26, 2016. It is prior art under 35 U.S. § 102(d) (AIA) or § 102(e) (pre-AIA).

Lisogurski describes a portable physiological monitoring system that uses a wearable optical sensor to measure a person's pulse rate and oxygen saturation (*e.g.*, a pulse oximetry system). Ex.1011, 3:66-4:8. The system includes a sensor, a monitor, and remote devices such as a server. Ex.1011, 11:28-32, 15:43-48; Ex.1003, ¶70. The sensor can be worn in various locations, such as on a fingertip or wrist, Ex.1011, 4:6-8, 4:15-20, is battery powered, and can wirelessly communicate with the monitor, Ex.1011, 17:55-58; Ex.1003, ¶71. The sensor can

include several light emitting diodes (LEDs) and photodetectors. Ex.1011, 17:37-45, 10:48-64, 11:9-13.

The system regulates a light drive signal, which is the electric current that is applied to the LEDs. Ex.1011, 11:38-41, 11:50-54, 12:3-9; Ex.1003, ¶73. For a particular LED, the emitted light intensity increases as a higher current is applied. Ex.1011, 12:3-9, 12:16-22, 7:13-16, 7:24-31. Lisogurski teaches that the LEDs can be modulated. Ex.1011, 4:48-54, 8:4-8, 8:27-35, 16:25-32. Depending on various conditions, the device can change the modulation parameters and the light drive cycle. Ex.1011, 1:60-61, 1:67-2:3. The drive cycle parameters that can be controlled include "light intensity, duty cycle, [and] light source firing rate." Ex.1011, 1:60-61, 1:67-2:3; *see id.*, 1:19-21, 5:48-54, 25:53-55. Lisogurski explains that varying the drive cycle parameters can increase the signal-to-noise ratio of the device when interference is encountered. Ex.1011, 5:55-6:6, 9:46-52, 27:44-49; Ex.1003, ¶75.

The modulated light emitted by the LEDs is passed into a person's tissue and the light reflected back is detected by a photodetector. Ex.1011, 4:7-11, 10:48-56, 11:13-20; Ex.1003, ¶74. The detector "convert[s] the intensity of the received light into an electrical signal." Ex.1011, 11:14-16. Lisogurski teaches that the sensor can send the detected signal directly to the monitor or it can pre-process the signal first. Ex.1011, 11:20-27. It also shows that the sensor can be connected to the

monitor with a wire or cable, or it can be "wirelessly connected to [the] monitor." Ex.1011, 17:54-59, Fig. 3. Either way, the device applies signal processing techniques to the detected signal to isolate the signal from the reflected light. Ex.1011, 7:16-21, 12:48-49; *see generally id.*, 13:7-14:55 (describing various signal processing).

2. Overview of Carlson

Carlson is a U.S. Patent Application published on March 3, 2005, and is prior art under 35 U.S.C. § 102(a) and (b) (AIA and pre-AIA). Carlson describes a wearable pulse oximeter that can be worn on the ear, finger, toe or "other parts of the human body." Ex.1009, [0052], [0078]; Ex.1003, ¶78. The device uses a conventional sensor known in "the state of the art" that emits optical wavelengths in the red (*e.g.*, 660 nm) and infrared (*e.g.*, 800 to 1000 nm) ranges, and it detects light that has been transmitted or reflected. Ex.1009, [0003], [0050], [0052]. The device is mobile and can wirelessly transmit data to a doctor or hospital. Ex.1009, [0072], [0077]-[0078]; Ex.1003, ¶78.

Carlson's objective is to describe techniques for "increasing the technical performance of pulsoximetry in terms of quality and robustness of the measurement signal versus environmental disturbances and energy consumption." Ex.1009, [0002]; *see* Ex.1003, ¶79. Carlson notes that while known sensors can be used in telemedicine, athletics, and other mobile applications, these standard

sensors "suffer from signal instability and insufficient robustness versus environmental disturbances." Ex.1009, [0004]. Carlson therefore has the objective "to define optical and/or electronic means for increasing the Signal-to-Noise ratio (S/N)… of a pulsoximeter sensor for robust application of pulsoximetry in telemedicine and near patient testing applications in rough (optical) environmental conditions, e.g. at changing light influences, such as sunlight, shadow, artificial light, etc." Ex.1009, [0010]. These observations in Carlson provide a direct motivation to a skilled person to incorporate its techniques, features and other improvements into other pulsoximetry devices. Ex. 1003, ¶83.

3. A Skilled Person Would Have Modified Lisogurski to Incorporate Elements Shown in Carlson

A skilled person would have considered the systems described in Lisogurski in conjunction with those described in Carlson, as both concern analogous miniaturized wireless puloximetry devices having the same applications (*e.g.*, mobile monitoring of pulse and other physiological characteristics of a person). Ex.1003, ¶84.

Lisogurski describes a PPG system that is designed to optimize power consumption. Ex.1011, 1:4-6, 3:50-53. Its system allows "for increased battery life" and "for increased portability." Ex.1011, 1:16-18. As an example, Lisogurski explains that its techniques could improve oximeters by reducing power requirements, allowing for smaller devices or longer life. Ex.1011, 4:63-67.

Lisogurski describes these improvements in a system that includes a wearable sensor, *e.g.*, one worn on a wrist. Ex.1011, 4:15-20, 17:51-58. Lisogurski teaches several techniques for increasing the signal-to-noise ratio of measured signals while minimizing power consumption. Ex.1011, 9:46-52. As Dr. Anthony explains, these teachings would motivate a skilled person to look for other techniques for achieving the same objectives, particularly those used with wearable sensors. Ex.1003, ¶¶81-84. A skilled person would do that as part of the ordinary design process he or she follows to improve the operation of a device; they naturally would look to complementary designs and techniques in analogous systems. Ex.1003, ¶82.

That would have led the skilled person to Carlson, which describes techniques for improving pulse oximetry devices by improving both signal measurement and energy consumption. Ex.1009, [0002]; Ex.1003, ¶83. Carlson teaches techniques and structures for increasing the signal-to-noise ratio of the optical sensing performed by such devices, even where optical conditions of the environment are changing. Ex.1009, [0010]. Carlson indicates its techniques are energy efficient and can be used in battery-powered devices, such as those worn on an earlobe or finger. Ex.1009, [0048], [0052]. Carlson describes incorporating its techniques in devices used for hospital patients, for mobile monitoring and telemedicine, and for sports applications to monitor athletes. Ex.1009, [0004].

Lisogurski and Carlson thus describe analogous systems with common applications and utility; both describe techniques for improving the power consumption of portable and wearable optical sensing devices while improving their performance and utility. Ex.1003, ¶84. The skilled person would have considered the references together when implementing a system based on Lisogurski's teachings. Ex.1003, ¶84.

Moreover, as explained in §III.B, above, by 2012, there was a general trend in the industry to create wearable devices that can be used in mobile monitoring situations or for sports and personal fitness applications. Ex.1003, ¶¶48-56. Thus, the skilled person considering Lisogurski would have had reason to look to references describing techniques for creating or improving wearable devices for these mobile health and consumer applications, such as Carlson. Ex.1003, ¶85.

The skilled person also would have been motivated to include specific features from Carlson in Lisogurski's system, for the reasons set forth below.

4. Theoretical Distinctions Between Lisogurski and Independent Claims 5, 7-9, 13, and 15-17

As explained below, Lisogurski describes systems having all, or nearly all, of the elements of the systems as they are defined by the contested claims. Patent Owner may, however, contend that certain distinctions exist between those claims and the systems described in Lisogurski. For independent claims 5 and 13 (from

which all the other claims depend), these theoretical distinctions include whether Lisogurski discloses:

- "lenses";
- increasing the signal-to-noise ratio by "increasing a pulse rate of at least one of the plurality of semiconductor sources";
- that its sensor alone includes every component of the measurement device in the claims (*e.g.*, that the claims require the LEDs and the circuitry that controls them to be physically integrated into a single component).

One other distinction is with respect to dependent claim 7, which specifies transmitting specific data (*e.g.*, GPS and time data).

Each of these supposed distinctions would be inconsequential to patentability, as a skilled person would have considered each to have been an obvious variation of the systems being described in Lisogurski at the time of the invention. That is because each represents a conventional, logical, and predictable design alternative to what Lisogurski depicts based on Lisogurski's own guidance, especially when considered with Carlson's teachings. Consequently, independent claims 5 and 13, as well as claims 7-10 and 15-17 would have been obvious to a skilled person based on Lisogurski in view of Carlson.

5. Comparison of Claim 13 to Lisogurski and Carlson

The primary reference here, Lisogurski, describes systems that closely parallel the claimed systems. As shown below, any potential distinctions Patent Owner could contend exist are extremely limited, inconsequential and, would have been obvious.

a) Preamble

The claim 13 preamble specifies "*a measurement system*." Lisogurski likewise describes a measurement system. Ex.1011, 3:43-46, 3:61-4:3 ("a pulse oximeter… may non-invasively measure the oxygen saturation of a patient's blood"); *see id.*, Abstract, 4:52-62, Figs. 1 and 3; Ex.1003, ¶88.

b) "a wearable measurement device…"

Lisogurski teaches a sensor that may be worn on various portions of a person's body, including "a fingertip, toe, forehead or earlobe… additional suitable sensor locations include, without limitation…, the wrist to monitor radial artery pulsatile flow… and around or in front of the ear." Ex.1011, 4:6-20; Ex.1003, ¶89. The sensor is battery-powered and can communicate with the monitor over a wireless connection. Ex.1011, 17:55-59 ("Sensor unit 312 may be powered by an internal power source, e.g., a battery… [T]he sensor may be wirelessly connected to monitor 314."). Thus, the sensor is a "*wearable… device*."

(1) "…for measuring one or more physiological parameters…"

Lisogurski explains that its sensor is part of a system for measuring physiological parameters – it describes "an optical physiological monitoring system" that "may be used to determine physiological parameters such as blood oxygen saturation, hemoglobin, blood pressure, pulse rate, other suitable parameters, or any combination thereof." Ex.1011, 1:10-25; *id.*, 3:43-46; *see also id.*, 3:61-4:5, 4:22-25, 15:30-35. Lisogurski thus describes a sensor for "*measuring one or more physiological parameters*." Ex.1003, ¶¶90-91.

(2) "…including a light source comprising a plurality of… light emitting diodes, the light emitting diodes configured to generate an output optical beam with one or more optical wavelengths, wherein at least a portion of the one or more wavelengths is a near-infrared wavelength between 700 nanometers and 2500 nanometers"

Lisogurski describes a wearable sensor that can include a light source comprising multiple LEDs ("*a plurality of … light emitting diodes…*"). Ex.1011, 17:42-45 ("In an embodiment, sensor unit 312 may include multiple light sources and detectors."), 10:48-49, 10:58-64 ("light source 130 may include any number of light sources with any suitable characteristics"); Fig. 1 (130); Fig. 3 (316); Ex.1003, ¶¶92-93. Lisogurski indicates that each of the LEDs is configured to output a different optical wavelength. Ex.1011, 7:38-8:3 ("For example, in a

system with two light sources… the first light source may be a high efficiency infrared (IR) LED while the one or more additional light sources may be lower efficiency red LEDs.”). The light source may include any number of LEDs, such as multiple IR LEDs and multiple red LEDs. Ex.1011, 10:58-63, 17:37-45, 19:25-31; Ex.1003, ¶94.

Lisogurski further explains that the LEDs are “configured to emit photonic signals having one or more wavelengths of light (e.g., Red and IR) into a subject’s tissue” (“*an output optical beam with one or more wavelengths*”). *Id*. 10:49-52; *see id.*, 4:42-45; Ex.1003, ¶94. The LEDs are configured to direct the light “into a subject’s tissue,” (Ex.1011, 10:49-52), and thus, they create light “transmitted to a particular location in space” as required by the term “*beam*.” Ex.1003, ¶94. It also explains that “the IR wavelength may be between about 800 nm and about 1000 nm” (“*at least a portion of the one or more wavelengths is a near-infrared wavelength between 700 nanometers and 2500 nanometers*”). *Id*., 10:56-58. Thus, Lisogurski describes the first element of claim 13. Ex.1003, ¶94.

c) “the light source configured to increase signal-to-noise ratio”

Lisogurski teaches that the light source is in the wearable sensor 102. Ex.1011, 10:48-49. It teaches alteration of the light drive parameters of the LEDs in response to “the level of noise, ambient light, [or] other suitable reasons,” and that “increas[ing] the brightness of the light sources in response to [increased level

of background] noise to improve the signal-to-noise ratio." Ex.1011, 9:46-52; *id.*, 5:55-6:6 (discussing modulation techniques and "conventional servo algorithms" for adjusting the signals emitted by the LEDs), 1:67-2:3. It also explains that changes to the light drive parameters can be used to mitigate the effects of noise, motion, or ambient light, for example, to thereby increase the signal-to-noise ratio. Ex.1011, 5:57-61; 9:46-52, 9:57-60, 14:49-55, 35:5-9 ("It will also be understood that the earlier described embodiments relating to varying light output may also apply to sampling rate."); Ex.1003, ¶¶95-96.

Lisogurski explains that signal modulation techniques are controlled by control circuitry and light drive circuitry, which generate a light drive signal for activating and controlling the sensor's light sources. Ex.1011, 1:44-46, 11:38-41, 11:50-54. It identifies the light drive signal "[p]arameters that may be varied include light intensity, firing rate, duty cycle, other suitable parameters, or any combination thereof." Ex.1011, 1:19-21. These parameters correspond to brightness (light intensity), frequency (firing rate), and pulse width which is the duration of each pulse of light (duty cycle). Ex.1003, ¶97.

Lisogurski thus teaches that "*the light source [is] configured to increase signal-to-noise ratio*" by varying light drive parameters of the LEDs. Ex.1003, ¶¶95-98.

As noted above (§VI.A.4), Patent Owner may contend that Lisogurski does not teach this element because the control and light drive circuitry that control the LEDs is depicted in monitor 104, which is separate from the wearable sensor 102 that contains the LEDs. To the extent the claims could be considered to require the control and light drive circuitry and the LEDs to be in the same device, that configuration of Lisogurski would have been obvious. Ex.1003, ¶¶99-100.

Lisogurski teaches the control circuitry directs the light drive circuitry to generate the light drive signal, which is the electric current provided to the LEDs that turns them on and determines their brightness. Ex.1011, 11:38-41, 11:50-54, 25:52-55; Ex.1003, ¶101. Because these circuits work together to output the electric current that is applied to the LEDs, the skilled person would have understood that this circuitry would need to be in the same device as the LEDs (the sensor), or at least that it was obvious to include the circuitry there. Ex.1003, ¶101; Ex.1011, 11:38-41, 11:50-54, 25:52-55. A wired configuration of these elements is presented in Figure 1 of Lisogurski (annotations added).

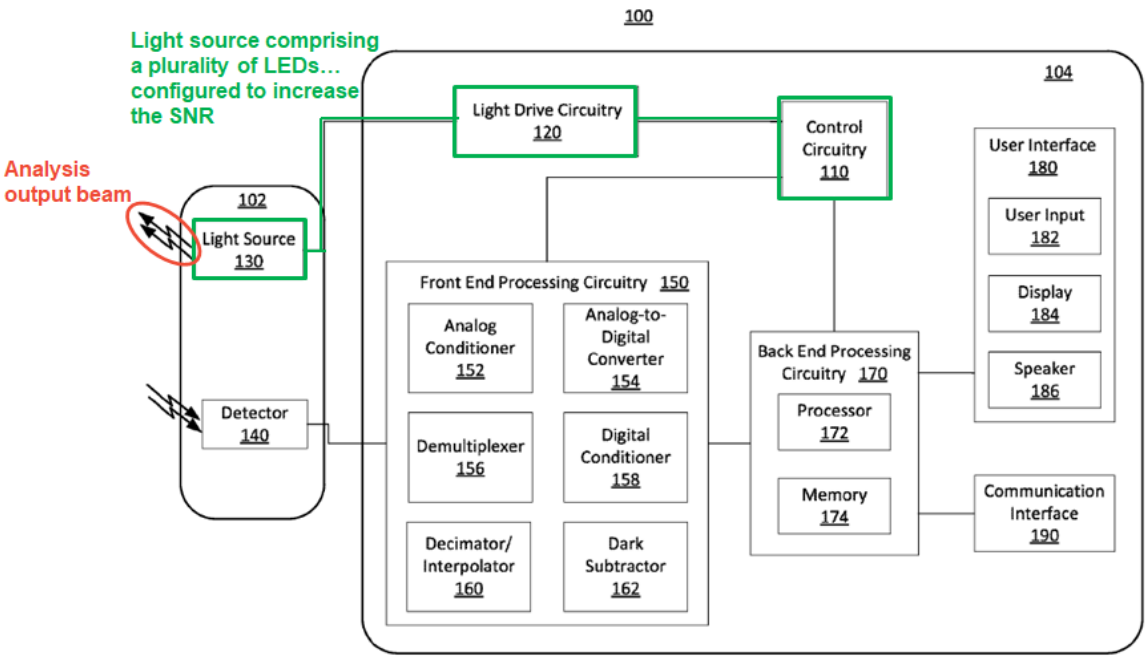

FIG. 1

Ex.1003, ¶98.

Lisogurski also teaches a wireless embodiment, where the sensor containing the LEDs is separate from the monitor. Ex.1011, 17:55-59 ("Sensor unit 312 may be powered by an internal power source, e.g., a battery (not shown)…. [T]he sensor may be wirelessly connected to monitor 314 (not shown)."), 18:23-25; *see also id.*, 18:16-31, 17:32-35; Ex.1003, ¶¶100-02. The skilled person would have understood that in the wireless embodiment, the light drive and control circuitry would be in the wireless sensor so they could apply current to the LEDs. Ex.1003, ¶¶100-01. Lisogurski also expressly teaches dividing or combining discrete elements into one component, stating: "[i]n some embodiments the functionality of some of the components may be combined in a single component… [or] the

functionality of some of the components of monitor 104… may be divided over multiple components." Ex.1011, 16:2-9. The skilled person would have recognized this guidance to apply to configuration of the LEDs and the light drive and control circuitry, as those elements work together. Ex.1003, ¶102.

A skilled person also would have recognized that adding this additional circuitry to the sensor would not have negatively affected the operation of the device. Ex.1003, ¶102. Moreover, the necessary circuitry is small and power efficient, and could easily be integrated into the wearable sensor. *Id.* The skilled person would have had a motivation to do so from general trends in the industry in 2012, including those favoring integration of multiple features and capabilities in wearable devices to improve their operation in mobile monitoring systems or for sports and personal fitness applications. Ex.1003, ¶103.

Consequently, an ordinary artisan would have found it obvious to modify the illustrated implementation of Lisogurski in Figure 1 to combine the light drive and control circuitry into a wireless sensor containing the LEDs. Ex.1003, ¶¶99-102.

(1) "by increasing a light intensity from at least one of the plurality of semiconductor sources"

Lisogurski teaches increasing the signal-to-noise ratio by increasing the "brightness" of a light source, which corresponds to the light intensity of that light source ("*increasing a light intensity*"). Ex.1003, ¶109 (intensity is the brightness squared). For example, Lisogurski explains that the sensor may receive "an

increased level of background noise in the signal due to patient motion. The system may ***increase the brightness of the light sources*** in response to the noise ***to improve the signal-to-noise ratio***." Ex.1011, 9:46-52 (emphases added); *see id.*, 37:6-22, 6:3-6. Therefore, Lisogurski describes this element. Ex.1003, ¶¶104-109.

(2) "by increasing a pulse rate of at least one of the plurality of semiconductor sources"

Lisogurski explains that its system can adjust various parameters of light emitted by the LEDs to ensure an adequate signal-to-noise ratio. Ex.1011, 9:46-52; *id.*, 37:6-22. These parameters include "drive current or light brightness, duty cycle, [and] ***firing rate***" amongst others. Ex.1011, 27:44-52 (emphasis added); *id.*, 2:1-2 ("light source firing rate"), 8:29-35, 25:49-55; Ex.1003, ¶112. A person of ordinary skill would understand that the "firing rate" of an LED is the same as the claimed "pulse rate,"[6] because both terms refer the number of pulses of light generated by the LED per unit of time. Ex.1003, ¶113.

---

[6] As Dr. Anthony explains, Lisogurski uses the term "pulse rate" to refer to the heart rate of a user, Ex.1011, 1:22-25 ("determined physiological parameters such as… pulse rate"), and the term "firing rate" to refer the frequency at which the LED blinks, Ex.1011, 2:1-2 ("light source firing rate"). Ex.1003, ¶114.

Lisogurksi describes embodiments where the firing rate of an LED is correlated to the sampling rate of an analog-to-digital converter in the detector. Ex.1011, 33:47-49 ("In some embodiments, sampling rate modulation may be correlated with light drive signal modulation."); *see also, id.*, 11:43-46; 11:52-55. Lisogurski explains "[f]or example, the time between 'on' periods [for an LED] may be the length of time of 'off' period 220 of FIG. 2A… [D]ecreasing the duration of the 'off' periods (i.e., ***increasing the emitter firing rate***) relates to an increased sampling rate." Ex.1011, 35:27-31 (emphasis added). Thus, Lisogurski teaches that as the sample rate increases, the firing rate of the LED also increases. Ex.1003, ¶¶115-16.

Lisogurski also teaches that the sampling rate and LED firing rate can be varied for the same reasons that light brightness is varied. Ex.1011, 35:7-9 ("the earlier described embodiments relating to varying light output may also apply to sampling rate"). One reason these parameters are varied is to improve the signal-to-noise ratio; as it states "[t]he system may ***increase the brightness of the light sources*** in response to the noise ***to improve the signal-to-noise ratio***." Ex.1011, 9:46-52 (emphases added). Lisogurski also explains that increasing the sampling rate "may result in more accurate and reliable physiological information." Ex.1011, 33:56-58. Thus, Lisogurski teaches that the system can increase the LED firing rate ("*pulse rate*") to increase signal-to-noise ratio. Ex.1003, ¶116.

As noted above (§VI.A.4), Patent Owner may contend that Lisogurski does not explicitly teach that increasing a pulse rate of one or more LEDs increases the signal-to-noise ratio.

Initially, Lisogurski clearly identifies the importance of increasing the signal-to-noise ratio in its scheme. Ex.1011, 9:50-52 ("The system may increase the brightness of the light sources in response to the noise to improve the signal-to-noise ratio."); Ex.1003, ¶118. It also explains that one reason to do this is to offset the effect of "noise, patient motion, or ambient light." *Id.*, 9:57-60. This is consistent with the knowledge of the skilled person, who would understand that the quality of measuring a physiological parameter derives ultimately from the quality of the signal being analyzed, and that noise such as ambient light diminishes that signal quality. Ex.1003, ¶83. That person thus would have been motivated to consider prior art teaching additional ways of improving the signal-to-noise ratio in optical sensors based on LEDs when considering implementation of the Lisogurski systems. Ex.1003, ¶¶83-85, 120-21.

Carlson teaches one such way of improving signal-to-noise ratios, including to deal with the same problems of ambient light identified in Lisogurski. Ex.1003, ¶¶118-19. As it explains, pulsing the LEDs reduces the effects of ambient light including sunlight. Ex.1009, [0067]-[0069]. Carlson teaches that the pulse frequency ("*pulse rate*") is "chosen in such a way that it is outside the frequency

spectrum of sunlight and of ambient light" and it could be "1000 Hz" or "can be chosen at any other frequency, as e.g. 2000 Hz or even higher." Ex.1009, [0069]; Ex.1003, ¶119. Figure 8 of Carlson shows increasing the operating frequency F_0 of the LEDs as compared to Fig. 7c. Ex.1009, [0069]. This frequency shift, which corresponds to increasing the "*pulse rate*" of the emitter, increases "significantly the Signal-to-Noise and Signal-to-Background ratio." Ex.1009, [0069]; Ex.1003, ¶119.

Thus, to the extent a skilled person would not have recognized from Lisogurski alone that one can increase signal-to-noise by increasing the firing rate of its LEDs, doing so would have been obvious when Lisogurski is considered in view of Carlson. Ex.1003, ¶117. Both references identify the same problem – ambient light – and the need to offset its negative impact on the signal-to-noise ratio. Ex.1003 ¶¶118-21; Ex.1011, 9:46-60; Ex.1009, [0067]-[0069]. The systems described in Lisogurski also can readily be modified to incorporate the Carlson technique, given that Lisogurski teaches that the firing rate of the LEDs can be adjusted in response changes in environmental conditions, such as changes in background noise or ambient light. Ex.1011, 1:67-2:3 ("The system may, in response to the external trigger, vary the… light source firing rate"), 5:55-61 ("Conventional servo algorithms may adjust the light drive signals due to, for example, ambient light changes"), 9:46-60 ("the system may alter the cardiac

modulation technique based on the level of noise, ambient light, [or] other suitable reasons…"), 37:6-18 (the system may change the modulation mode if it "detect[s] a change in background noise [or] a change in ambient light"). Consequently, a skilled person would have found it obvious to configure Lisogurski to increase the firing rate (frequency) of LEDs as taught by Carlson, given that Carlson teaches that increasing the modulation frequency of the pulsed LEDs improves the signal-to-noise ratio. Ex.1009, [0069]; Ex.1003, ¶¶120-21.

The skilled person also would have recognized that configuring Lisogurski to increase the signal-to-noise ratio by increasing the LED firing rate would have been a predictable arrangement of known elements, with each performing the same function it was known to perform and yielding what one would expect from the arrangement. Ex.1003, ¶122.

d) "the wearable measurement device comprising a plurality of lenses configured to receive a portion of the output optical beam and to deliver an analysis output beam to a sample"

Lisogurski teaches using conventional red and infrared LEDs to emit an output optical beam, Ex.1011, 10:53-56, 7:38-8:3, and that each sensor can include multiple LEDs of each wavelength, Ex.1011, 19:25-31. A person of ordinary skill would have known that a conventional LED is comprised of a light emitting semiconductor (*e.g.*, a semiconducting material doped with impurities to create a p-n junction) that creates the light, and that the semiconductor typically is

encapsulated in glass or another medium. Ex.1003, ¶124. The encapsulant can be used to protect the semiconductor, but it also commonly is shaped as a lens to focus the light emitted by the LED. Ex.1003, ¶124. Thus, a person of ordinary skill would understand that each LED includes a lens. Ex.1003, ¶¶123-24.

The POSA would have known there are three types of LEDs: (i) LEDs with no encapsulant, (ii) LEDs with an optically inert encapsulant, and (iii) LEDs with an encapsulant that acts as a lens. Ex.1003, ¶125; Ex. 1035, 97-98, 191-99, 266-67. The lens helps direct more of the light produced by the LED outward toward the tissue (and thus "transmit[] [the light] to a particular location in space"), increasing its efficiency, which is important in a mobile, battery-powered device. Ex.1003, ¶126. The skilled person would have found it obvious to select an LED that uses an encapsulant that functions as a lens, as this was a common configuration with known benefits. Ex.1003, ¶¶124-26, 128. In this configuration, each of Lisogurski's LEDs would emit a portion of an "*output optical beam*," which would be captured and focused by that LED's encapsulant lens, and then emitted as the "*analysis output beam*." Ex.1003, ¶127.

Thus, Lisogurski describes "*a plurality of lenses configured to receive a portion of the output optical beam and to deliver an analysis output beam to a sample*."

As noted above (§VI.A.4), Patent Owner may contend that Lisogurski does not disclose a plurality of lenses. Even if that distinction were accepted, it would be inconsequential, because the skilled person would have found it obvious to include that element in Lisogurski based on that person's knowledge as well as the teachings of Carlson. Ex.1003, ¶¶126, 129.

A skilled person considering Lisogurski would have known that a lens is a "basic building block" of an optical sensor (Ex.1019, 765) and that lenses commonly were part of such sensors. Ex.1003, ¶128. That person also would have found it obvious to include a separate lens for each LED in Lisogurski's sensor, given that lenses were considered to be a standard component of an optical sensor. *Id.* Thus, to the extent Lisogurski's LEDs do not suggest to a POSA the use of lenses ("transparent surfaces used to collimate (make parallel) or focus rays of light" per Apple's construction), doing so for each LED would have been obvious based on a POSA's knowledge. Ex.1003, ¶129.

Carlson independently identifies the benefits of using lenses within optical sensing devices of the type described in Lisogurski. Ex.1003, ¶¶130-33. Carlson teaches use of a plurality of lenses – it calls for use of "at least one beam shaping optical element to direct the emitted light" towards a sample (Ex.1009, [0013]) and that the beam shaping element can be "diffractive or refractive lenses, to direct the emitted optical radiation of, e.g., the LED light source into the human or animal

tissue…." Ex.1009, [0013], [0014], [0024], [0062]. A "refractive lens" is one that focuses rays of light, and thus, it meets Apple's construction of "*lens*." Ex.1003, ¶131. Figure 4 of Carlson shows two lenses 21 that receive light beams 8 emitted by LEDs 15 ("*a portion of the output optical beam*") and deliver light bundles or beams 12 to sample 2 ("*deliver an analysis output beam to a sample*"). Ex.1009, [0054], [0062].

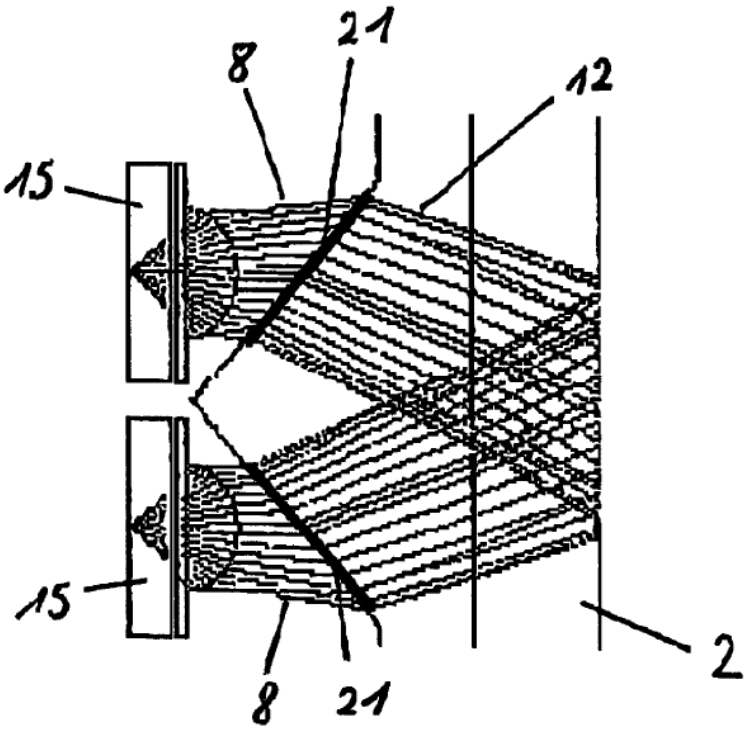

Figure 4

Ex.1009, Fig.4; *id.*, [0054] ("in Fig. 4, using the beam shaping optics 21, the two initial light beams 8 are guided in the form of bundled beams 12"). Thus, as the figure shows, the light within each beam is "transmitted to a particular location in space" and meets Apple's construction of the term "*beam*." Ex.1003, ¶¶131-32.

A skilled person would have considered it obvious to include a plurality of lenses as described in the Carlson device in Lisogurski's sensor for the reason Carlson identifies—to focus the light emitted by each of the LEDs onto a person's skin. Ex.1003, ¶133. Carlson identifies a benefit of doing so—it teaches that lenses can be included in the optical sensors to increase the optical signal power without increasing the actual power used by the system. Ex.1009, [0014] ("The basic idea… is to use ***a beam-shaping element, such as e.g.… lenses***…, in order to increase the optical signal power…, thus increasing the Signal/Noise … ratio."); *id.*, [0010].

The skilled person also would have been motivated to include lenses in the Lisogurski device. Ex.1003, ¶¶133-34. One of the objectives it identifies for these devices is to improve the power consumption efficiency of optical sensing devices, including via techniques that improve the signal-to-noise ratio of the measured optical signal. Ex.1011, 6:3-6, 9:49-60, 13:60-14:10, 14:40-55, 37:6-20; Ex.1003, ¶¶84, 118. The skilled person would have recognized that adding lenses to Lisogurski as Carlson teaches would achieve that objective as they improve signal measurement efficiency and complement operation of the Lisogurski system. Ex.1003, ¶¶133-34. The skilled person also would have known that lenses are one of the "basic building blocks" of optical sensors, (Ex.1019, 765) and would be able to integrate them into the Lisogurski systems with routine effort (Ex.1003, ¶134).

A skilled person thus would consider the addition of lenses to Lisogurski's sensor to be a predictable arrangement of known elements, with each performing the same function it was known to perform and yielding what one would expect from the arrangement. Ex.1003, ¶134.

e) "the wearable measurement device further comprising a receiver configured to receive and process at least a portion of the analysis output beam reflected or transmitted from the sample and to generate an output signal, wherein the wearable measurement device receiver is configured to be synchronized to pulses of the light source"

Lisogurski's sensor includes a detector that receives "the light that is reflected by or has traveled through the subject's tissue" ("*receive[s]… the analysis output beam*"). Ex.1011, 17:40-42; *see also id.*, 11:9-10; Fig. 1 (140); Fig. 3 (318). The detector described in Lisogurski thus "*process[es]… the analysis output beam… and [] generate[s] an output signal*" because it "convert[s] the intensity of the received light into an electrical signal." Ex.1011, 11:14-17; 11:20-25; Fig. 1 (102); Fig. 3 (312); Ex.1003, ¶136. Lisogurski also teaches that "[a]fter converting the received light to an electrical signal, detector 140 may send the detection signal to monitor 104" (Ex.1011, 11:20-22) and that the sensor may further process the electrical signal before transmitting the detection signal to the monitor (Ex.1011, 11:25-27).

The detector described in Lisogurski is connected to front end processing circuitry (together, "*a receiver configured to receive and process*"), which "may receive a detection signal from detector 140 and provide one or more processed signals to back end processing circuitry 170." Ex.1011, 12:42-45. The "processed signals" in Lisogurski correspond to the claimed "*output signal*." Ex.1003 ¶¶137-38. Lisogurski also teaches that the front end processing circuitry is synchronized with the light drive circuitry that controls the modulation or pulses of the LEDs. Ex.1011, 11:41-46 (emphasis added) ("front end processing circuitry 150 may… operate ***synchronously*** with light drive circuitry 120. For example, front end processing circuitry 150 may ***synchronize*** the operation of an analog-to-digital converter and a demultiplexer with the light drive signal based on the timing control signals."). Thus, the front end processing circuitry and the detector ("*receiver*") are "*synchronized*" to the light drive signal ("*pulses of the light source*"). Ex.1003, ¶139.

Lisogurksi also describes embodiments where the firing rate of an LED is correlated to the sampling rate of an analog-to-digital converter in the detector. Ex.1011, 33:47-49 ("In some embodiments, sampling rate modulation may be correlated with light drive signal modulation."); *see also* 2:1-2, 27:44-52 (LED firing rate can be modulated). Lisogurski explains "[f]or example, the time between 'on' periods [for an LED] may be the length of time of 'off' period 220 of

FIG. 2A… [D]ecreasing the duration of the 'off' periods (i.e., ***increasing the emitter firing rate***) relates to an increased sampling rate." Ex.1011, 35:25-31 (emphasis added). Lisogurski teaches an embodiment where the measurements taken by the receiver have a one-to-one correlation, with one sample taken per on period. Ex.1011, 35:17-19.[7] A POSA would have understood that in this embodiment, the LEDs and the receiver are synchronized. Ex.1003, ¶140. This is another way in which Lisogurski teaches that the front end processing circuitry and the detector ("*receiver*") are "*synchronized*" to the light drive signal ("*pulses of the light source*"). Ex.1003, ¶140.

Lisogurski's description of the synchronizing process, which uses timing signals to synchronize the operation of the light source and the detection circuitry, is consistent with the embodiments in '533 specification. Ex.1003, ¶141; Ex.1001, 16:58-62 ("In one embodiment, the light source may be modulated, and then the detection system would be synchronized with the light source."), 19:17-19 ("some sort of synchronous detection system may be used").

---

[7] Lisogurski discloses different embodiments where there is not a one-to-one correlation, and instead multiple samples are taken per on period and then averaged. Ex.1011, 35:19-23.

Lisogurski thus describes "*a receiver configured to receive and process*" the reflected light, and that that is "*synchronized*" to the "*pulses of the light source*".

As noted above (§VI.A.4), Patent Owner may argue that Lisogurski does not teach this element because the front end processing circuitry is depicted in monitor 104 which is separate from wearable sensor 102 that contains the detector. To the extent the claims are found to require the front end processing circuitry and detector to be in the same device and that configuration is not shown Lisogurski, the skilled person would have considered it to have been an obvious variation of what Lisogurski teaches. Ex.1003, ¶¶142-43. The relevant circuitry is depicted in the annotated figure below.

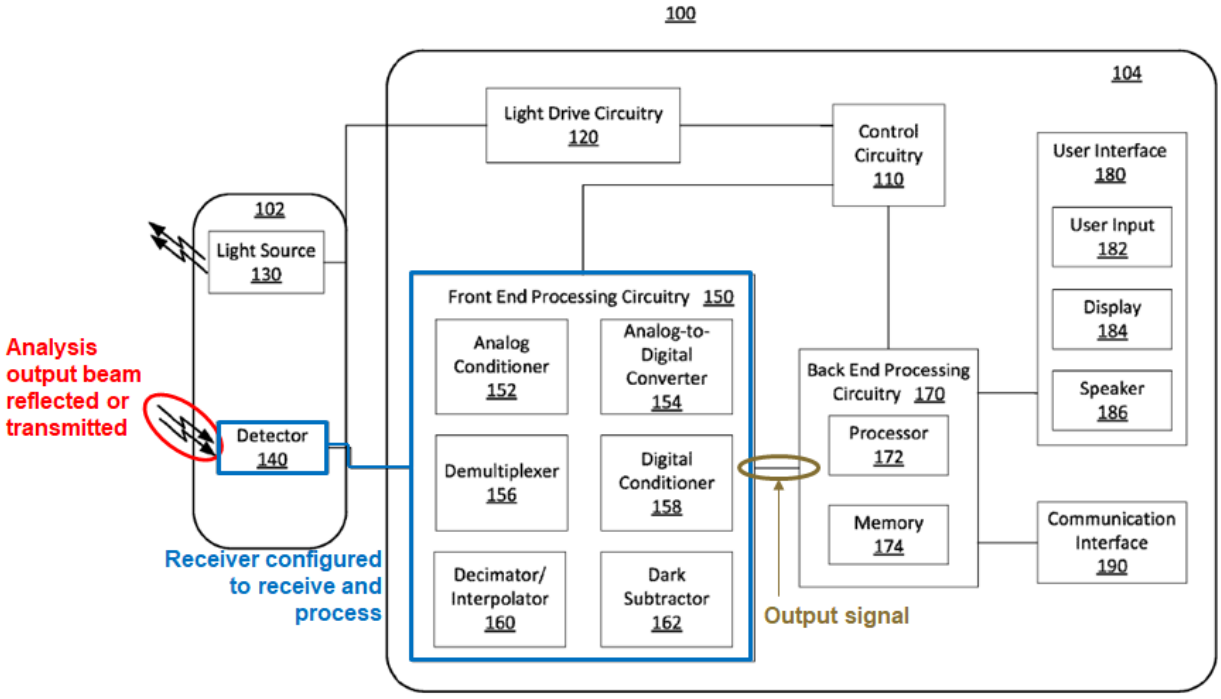

FIG. 1

Ex.1003, ¶138.

A skilled person would have found it obvious to integrate the front end processing circuitry of Lisogurski's systems into the sensor. Ex.1003, ¶143. Lisogurski teaches that the sensor can "preprocess" the electrical signal before transmitting the signal to the monitor. Ex.1011, 11:20-27. It also explains that the sensor may be a separate device that is wirelessly connected to the monitor. Ex.1011, 17:55-59 ("Sensor unit 312 may be powered by an internal power source, e.g., a battery (not shown)…. [T]he sensor may be wirelessly connected to monitor 314 (not shown)."), 18:23-25; *see also id.*, 18:16-31, 17:32-35. While this configuration is not depicted in Lisogurski's figures, the skilled person would have considered it obvious to configure the system to work that way based on the functional relationship between these elements. Ex.1003, ¶143.

As Dr. Anthony explains, the skilled person also would have found it obvious to include the front end processing circuitry in the sensor so that the sensor could process the detected signal and wirelessly transmit it to the monitor. Ex.1003, ¶144. That person would have understood that the analog signal output from the detector would need to be converted to digital form for wireless transmission. *Id.* Thus, that person would have found it obvious to include the front end processing circuitry, which performs analog-to-digital conversion and other initial processing of the signal, in the sensor where the signal is captured. *Id.* Adding this additional circuitry to the sensor would not have affected the operation

of the device. *Id.* The necessary circuitry is small and power efficient, and could easily be integrated into the wearable sensor. *Id.* This is also consistent with the indication in Lisogurski that "[i]n some embodiments the functionality of some of the components may be combined in a single component… [or] the functionality of some of the components of monitor 104… may be divided over multiple components." Ex.1011, 16:2-9; Ex.1003, ¶145.

Finally, a skilled person would have found a motivation to combine these elements into the sensor component based on general trends in the industry in 2012 (*see* §III.B above), which would encourage inclusion of additional features into wearable devices to improve their operation in mobile monitoring systems or for sports and personal fitness applications. Ex.1003, ¶146.

f) "a personal device…"

(1) "a personal device comprising a wireless receiver, a wireless transmitter, a display, a microphone, a speaker, one or more buttons or knobs, a microprocessor and a touch screen, the personal device configured to receive and process at least a portion of the output signal"

The back end processing circuitry, user interface, and communication interface in Lisogurski's monitor 104 corresponds to the claimed "*personal device*." The monitor includes a display and user interface that allows a user to see the monitored person's physiological parameters and to configure the operation of

the system. Ex.1011, 15:19-42; Ex.1003, ¶147. These components are in annotated Figure 1 below:

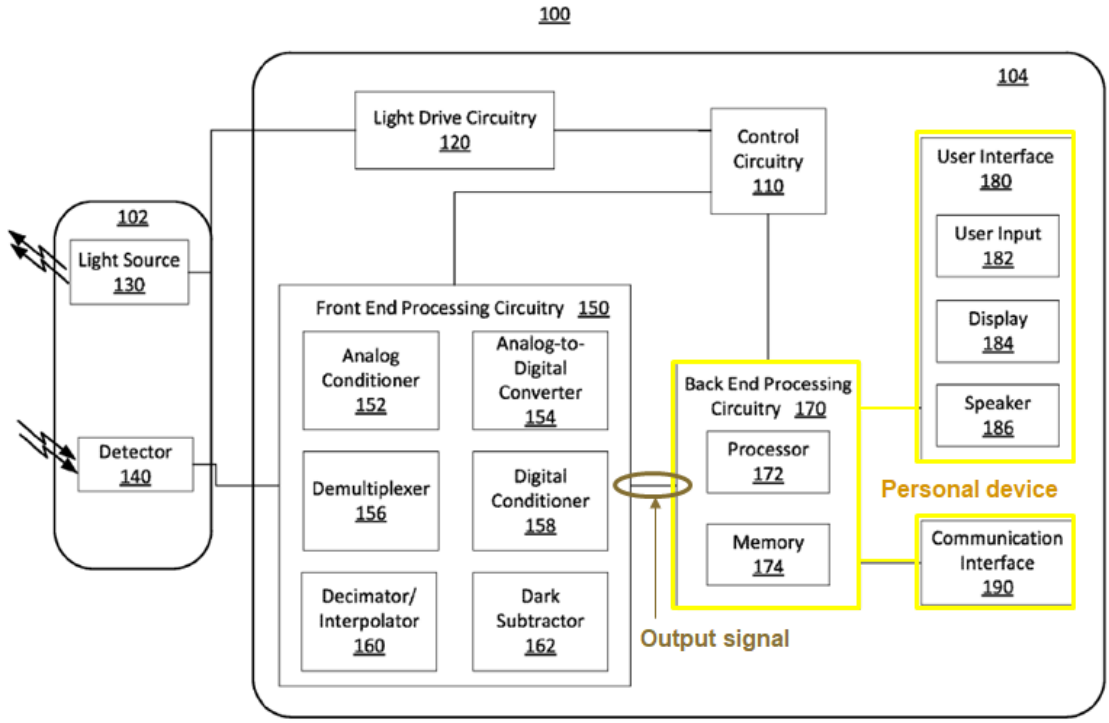

FIG. 1

Ex.1003, ¶147.

Lisogurski teaches that the front end processing circuitry performs some initial processing on the detected signal and then passes the processed signal to back end processing circuitry 170, which is coupled to user interface 180 and communication interface 190. Ex.1011, 15:16-18; Fig. 1. It also describes the back end processing circuitry as including a processor that receives and processes the output signal from the front end processing circuitry ("*configured to receive and process at least a portion of the output signal*") (Ex.1011, 14:60-62) and that

"[f]or example, processor 172 may determine one or more physiological parameters based on the received physiological signals." Ex.1011, 14:62-64; Ex.1003, ¶148.

The back end processing circuitry includes a processor 172 and is coupled to the user interface, which may include "any type of user input device such as a keyboard, a mouse, ***a touch screen***, ***buttons***, switches, ***a microphone***, a joy stick, a touch pad, or any other suitable input device." Ex.1011, 15:20-23 (emphases added); Fig. 1 (180, 182). The user interface also includes a ***display*** and a ***speaker***. Ex.1011, 15:19-20; Fig 1 (180, 184, 186). The communication interface "may include one or more ***receivers*** [or] ***transmitters***" each of which "may be configured to allow …***wireless*** communication." Ex.1011, 15:49-56 (emphases added). Thus, it discloses "*a wireless receiver, a wireless transmitter, a display, a microphone, a speaker, one or more buttons or knobs, a microprocessor and a touch screen.*" Ex.1003, ¶149.

(2) "a personal device… wherein the personal device is configured to store and display the processed output signal, and wherein at least a portion of the processed output signal is configured to be transmitted over a wireless transmission link"

Lisogurski explains that the back end processing circuitry of monitor 104 includes a processor that "may determine one or more physiological parameters based on the received physiological signals" and a display that shows those

physiological parameters ("*the processed output signal*"), including "for example, an estimate of a subject's blood oxygen saturation generated by monitor 104 (referred to as an 'SpO_2' measurement) [and] pulse rate information." Ex.1011, 14:62-64, 15:30-35; Ex.1003, ¶150. It also explains that the back end processing circuitry includes a memory such as RAM, ROM, flash memory, hard drive (magnetic disk). Ex.1011, 14:64-15:16; Fig. 1 (174). Likewise, it explains the memory can store a history of the determined physiological parameters. Ex.1011, 27:31-36, 30:42-48, 33:23-27. Thus, the processed data is both "*store[d] and display[ed]*." Ex.1003, ¶¶150-51.

Lisogurski teaches not only that the determined physiological parameters may be displayed, but that the "data [may be published] to a server or website" and the parameters may be made available to a user by any other suitable technique. Ex.1011, 26:55-60. Lisogurski explains that to publish the data to a server or website or to have it transmitted to another device, the back end processing circuitry of the monitor can transmit information to external devices through a wireless transmission link such as "WiFi, IR, WiMax, BLUETOOTH, UWB or other standards." Ex.1011, 15:43-48; 15:55-57. Thus, the processed data are "*transmitted over a wireless transmission link*." Ex.1003, ¶152.

In addition, Lisogurski teaches that the determined physiological parameters may be wirelessly transmitted to another monitor 326 that can process and display

information from multiple monitoring devices. Ex.1011, 18:11-15, 18:49-62 ("Multi-parameter physiological monitor 326 may be configured to calculate physiological parameters and to provide a display 328 for information from monitor 314 and from other medical monitoring devices… Monitor 314 may be communicatively coupled to multi-parameter physiological monitor 326… and/or may communicate wirelessly."). Both monitors can further share the information with servers or other workstations. Ex.1011, 18:11-15, 18:62-65 ("In addition, monitor 314 and/or multi-parameter physiological monitor 326 may be coupled to a network to enable the sharing of information with servers or other workstations."). Thus, this is a second way the processed data are "*transmitted over a wireless transmission link*." Ex.1003, ¶153.

g) "a remote device…"

(1) "a remote device configured to receive over the wireless transmission link an output status comprising the at least a portion of the processed output signal, to process the received output status to generate processed data and to store the processed data"

Lisogurski teaches that the determined physiological parameters and other data ("*an output status comprising at least the processed output signal*") may be wirelessly transmitted "to a server or a website" or to another monitor (each a "*remote device*"). Ex.1011, 26:55-60 (publish to server or website), 18:11-15, 18:58-62 (monitor can send data to another monitor); *id.*, 15:43-48 (data can be

wirelessly sent to "electronic circuitry, a device, a network, a server or other workstations"), 15:55-57 (describing wireless transmission); Ex.1003, ¶154. It also indicates that when the data is transmitted to a server, website, another monitor, or other remote device, it may be further processed and stored. For example, to "publish" data to a server or website, the server or website would need to process the data and then store it. Ex.1011, 26:55-60; Ex.1003, ¶155. Lisogurski also explains that "processing equipment remote to the system may be used to determine physiological parameters." Ex.1011, 26:51-55. Where the remote device is another monitor, that monitor can be a "[m]ulti-parameter physiological monitor 326 [] configured to calculate physiological parameters and to provide a display 328 for information from monitor 314 and from other medical monitoring devices or systems." Ex.1011, 18:49-53. A person of ordinary skill would understand that these devices generate and store processed data in order to perform these functions. Ex.1003, ¶¶156-57.

(2) "wherein the remote device is capable of storing a history of at least a portion of the received output status over a specified period of time"

Lisogurski explains that the data transmitted to a server, website, another monitor, or other remote device may be stored or "published." Ex.1011, 26:55-60; Ex.1003, ¶158. It also explains that where the remote device is another monitor, that monitor can be a "[m]ulti-parameter physiological monitor 326 [] configured

to calculate physiological parameters and to provide a display 328 for information from monitor 314 and from other medical monitoring devices or systems." Ex.1011, 18:49-53. Lisogurski teaches that the data stored and shared by these devices include historical data, indicating, *inter alia*, that the described system can perform "historical analysis of prior cardiac cycles." Ex.1011, 20:8-9, 19:1-19. "For example…, [s]tatistical information… may also be calculated… for the historical information." Ex.1011, 20:9-13; *see* Ex.1003, ¶159.

A skilled person would have understood that to calculate historical information, the system must store historical physiological data ("*received output status*") over a specified period of time (*e.g.*, a certain number of cardiac cycles or a certain period of time). Ex.1003, ¶¶159-61, 163. Lisogurski goes on to explain that "processing equipment remote to the system may be used to determine physiological parameters." Ex.1011, 20:53-55. A person of ordinary skill would therefore understand that the remote device stores a history of the data and can perform the described historical analysis. Ex.1003, ¶163.

6. Comparison of Claim 5 to Lisogurski and Carlson

a) Preamble

Lisogurski teaches the preamble for the same reasons described above for Claim 13, element (a).

b) "a light source comprising a plurality of … light emitting diodes …"

Lisogurski teaches this limitation for the same reasons described above for Claim 13, limitation (b)(2).

c) "the light source configured to increase signal-to-noise ratio…."

Lisogurski teaches this limitation for the same reasons described above for Claim 13, limitation (c).

(1) "by increasing a light intensity from at least one of the plurality of semiconductor sources"

Lisogurski teaches this limitation for the same reasons described above for Claim 13, limitation (c)(1).

(2) "by increasing a pulse rate of at least one of the plurality of semiconductor sources"

Lisogurski with or without Carlson teaches this limitation for the same reasons described above for Claim 13, limitation (c)(2).

d) "an apparatus comprising a plurality of lenses configured to receive a portion of the output optical beam and to deliver an analysis output beam to a sample"

Lisogurski with or without Carlson teaches this limitation for the same reasons described above for Claim 13, limitation (d).

e) "a receiver configured to receive and process at least a portion of the analysis output beam reflected or transmitted from the sample and to generate an

output signal, wherein the receiver is configured to be synchronized to pulses of the light source"

Lisogurski with or without Carlson teaches this limitation for the same reasons described above for Claim 13, limitation (e).

f) "a personal device…"

(1) "comprising a wireless receiver, a wireless transmitter, a display, a microphone, a speaker, one or more buttons or knobs, a microprocessor and a touch screen, the personal device configured to receive and process at least a portion of the output signal"

Lisogurski teaches this limitation for the same reasons described above for Claim 13, limitation (f)(1).

(2) "… wherein the personal device is configured to store and display the processed output signal, and wherein at least a portion of the processed output signal is configured to be transmitted over a wireless transmission link"

Lisogurski teaches this limitation for the same reasons described above for Claim 13, limitation (f)(2).

g) "a remote device configured to receive over the wireless transmission link an output status comprising the at least a portion of the processed output signal, to process the received output status to generate processed data and to store the processed data."

Lisogurski teaches this limitation for the same reasons described above for Claim 13, limitation (g)(1).

7. Comparison of Dependent Claims to Lisogurski and Carlson

a) Transmitting GPS and Time Data as Specified in Claims 7 and 13 Would Have Been Obvious from Carlson

Claim 7 depends from claim 5 and specifies "*wherein the remote device is further configured to transmit at least a portion of the processed data to one or more other locations, wherein the one or more other locations is selected from the group consisting of the personal device, a doctor, a healthcare provider, a cloud-based server and one or more designated recipients, and wherein the remote device is capable of transmitting information related to a time and a position associated with the at least a portion of the processed data.*" Claim 15 depends from claim 13 and specifies the same limitation.

Lisogurski explains its system can allow for "increased portability," Ex.1011, 1:15-18, and describes systems where data from a portable monitor or sensor is collected and transmitted to a central location, Ex.1011, 18:11-15, 18:58-65, 20:53-60. Ex1003, ¶177. Lisogurski also explains that its systems are designed to wirelessly transmit physiological data. For example, it explains that the "communication interface 190" may include wireless communication capabilities to enable it to communicate with, *inter alia*, "a server or other workstations" (Ex.1001, 15:43-57), and that those enable it to be "coupled to a

network to enable the sharing of information with servers or other work stations (not shown)" (*Id.* at 18:48-67).

Carlson similarly explains that its devices are designed to transmit data to remote locations, explaining, *inter alia*, that measured values from its sensor can be wirelessly transmitted, including to "a special unit" worn by the user, which generates an alarm signal when a measured value is not within a predetermined range. Ex.1009, [0078]. It further explains that this alarm signal can be "transmitted to a respective person, to a medical doctor, to a hospital, etc.," corresponding to the claimed one or more other locations. Ex.1009, [0078]. Carlson also teaches that the device can also include GPS functionality, "which ***at any time*** gives ***the location*** of the person using the pulsoximetric sensor monitoring configuration." Ex.1009, [0078] (emphases added); Ex.1003, ¶176.

It would have been obvious to modify Lisogurski in the manner suggested by Carlson in order to use GPS data to track the location of a person wearing a sensor. Ex.1003, ¶178. Doing so would make it possible to identify where the person was in case of emergency to allow any medical personnel at the central location to find the person to provide assistance, as Carlson suggests. *Id.* Adding this functionality to Lisogurski would be straightforward and predictable to a skilled person; the sensor in Lisogurski could be modified to include a GPS receiver and to periodically transmit the GPS data to the monitor for collection at a

server, website, or another monitoring device where medical personnel could react to any emergencies. *Id.* Integration of GPS data was a standard configuration of medical monitoring systems, was well-known to those of skill in the art, and had known benefits. *Id.*; *see* §III.B, above. Thus, a skilled person would have found the system configured as claims 7 and 13 specify to have been obvious based on Lisogurski in view of Carlson.

b) Claims 8 and 16

Claims 8 and 16 depend from claims 5 and 13, respectively, and specify "*wherein the receiver is located a first distance from a first one of the plurality of light emitting diodes and a different, second distance from a second one of the plurality of light emitting diodes such that the receiver receives a first signal from the first light emitting diode and a second signal from the second light emitting diode*."

Lisogurski teaches using multiple light sources and multiple detectors "which may be spaced apart." Ex.1011, 17:43-45. It also states that "[a]ny suitable configuration" of sources and detectors maybe used. Ex.1011, 17:39-45. It further observes that "[s]ensor unit 312 may include one or more light source 316 for emitting light at one or more wavelengths into a subject's tissue. One or more detector 318 may also be provided in sensor unit 312 for detecting the light

that is reflected by or has traveled through the subject's tissue." Ex.1011, 17:37-42; Ex.1003, ¶180.

There are just two options for how two LEDs can be spaced in relation to a detector: either they are each the same distance from the detector or they are different distances from it. Ex.1003, ¶181. A skilled person reading the indication in Lisogurski that the sensors can be spaced apart would have immediately envisioned both options. *Kennametal, Inc. v. Ingersoll Cutting Tool Co.*, 780 F. 3d 1376, 1381 (Fed. Cir. 2015) (a reference can anticipate a claim even if it "d[oes] not expressly spell out" all the limitations arranged or combined as in the claim, if a person of skill in the art, reading the reference, would "at once envisage" the claimed arrangement or combination); *see In re Petering*, 301 F.2d 676 (CCPA 1962). Thus, Lisogurski discloses that each LED can be a different distance from the photodetector.[8]

---

[8] At the very least, this configuration would have been obvious. There are just two choices for how to space the LEDs from the detector, and the selection of one of those two ways is a simple design choice. Ex.1003, ¶182. For example, using detectors spaced different distances would allow measurement of different layers of tissue or help remove noise from motion. *Id.*

Lisogurski explains that "in a system with two light sources… the first light source may be a high efficiency infrared (IR) LED while the one or more additional light sources may be lower efficiency red LEDs." Ex.1011, 7:38-8:3. Lisogurski separately measures the signal from each LED. Ex.1011, 12:29-33 ("The period from time 216 to time 218 may be referred to as a drive cycle, which includes four segments: a Red light 'on' periods 202, followed by an 'off' period 220, followed by an IR light 'on' period 204, and followed by an 'off' period 220."), Figs. 2A and 2B. Lisogurski also can separately use each measured signal, for example, to calculate blood oxygen saturation using the ratio-of-ratios calculation, which is the ratio of the measured IR signal to the measured red signal. Ex.1011, 4:45-56; Ex.1019, 769-70; Ex.1003, ¶183. Thus, a person of ordinary skill would have understood that Lisogurski's photodetector detects a red signal from the red LED ("*a first signal from the first light emitting diode*") and an infrared signal from the infrared LED ("*a second signal from the second light emitting diode*"). Ex.1003, ¶184.

c) Claims 9 and 17

Claims 9 and 17 depend from claims 8 and 16, respectively, and specify "*wherein the output signal is generated in part by comparing the first and second signals*." Lisogurski teaches using red and infrared LEDs "because it has been observed that highly oxygenated blood will absorb relatively less red light and

more IR light than blood with a lower oxygen saturation. *By comparing the intensities of two wavelengths* at different points in the pulse cycle, it is possible to estimate the blood oxygen saturation of hemoglobin in arterial blood." Ex.1011, 4:45-51 (emphasis added). A skilled person would have understood that this comparison can be done, for example, by calculating blood oxygen saturation using the ratio-of-ratios calculation, which is the ratio of the measured IR signal to the measured red signal. Ex.1011, 4:45-56; Ex.1019, 769-70; Ex.1003, ¶186. Thus, Lisogurski teaches generating an output signal by comparing the detected infrared signal ("*first signal*") and the detected red signal ("*second signal*"). Ex.1003, ¶187.

d) Claim 10

Claim 10 depends from claim 5 and specifies "*wherein the output signal comprises one or more physiological parameters, and the remote device is capable of storing a history of at least a portion of the one or more physiological parameters over a specified period of time*." Lisogurski teaches this limitation for the same reasons identified above for Claim 13, limitation (g)(2). Ex.1003, ¶188.

B. Lisogurski, Carlson, and Mannheimer Render Obvious Claims 8-9 and 16-17

As explained above, Lisogurski in view of Carlson would have rendered obvious claims 5, 8-9, 13 and 15-17. Claims 8-9 and 16-17 are also unpatentable based on Lisogurski and Carlson in view of Mannheimer.

1. Overview of Mannheimer

Mannheimer is a U.S. Patent that issued on May 5, 1998, with an effective filing date of March 14, 1995. It is prior art under 35 U.S.C. § 102(a) and (b) (AIA and pre-AIA).

Mannheimer discloses a pulse oximetry monitoring and measurement system. Ex.1008, 6:17-36, Figs. 2, 4. It includes a sensor that uses one or more LEDs to alternately emit red and infrared light. Ex.1008, 6:19-21, 6:66-7:4. The emitted light is dispersed by the user's tissue, and the reflected light is collected by one or more detectors. Ex.1008, 6:22-23; Ex.1003, ¶190. Mannheimer teaches use of emitters that are spaced at different distances from a detector in order to obtain deep and shallow tissue measurements. Ex.1008, 1:40-54, 2:1-6, 3:25-35, Figs. 1B, 7. For example, Mannheimer includes an embodiment with two LEDs each spaced a different distance from a single detector. Ex.1008, Fig. 1B, 3:38-40, 5:58-62. In this way, reflected light from a surface layer of skin, which is non-vascular and susceptible to noise from motion and ambient light, can be removed so that light reflected by deeper, more vascular tissues layers can be used to identify a pulsatile signal of interest. Ex.1003, ¶191; Ex.1008, 3:25-35, 5:1-5.

2. A Skilled Person Would Have Modified Lisogurski and Carlson to Incorporate Elements Shown in Mannheimer

As described in Ground 1, a skilled person would have found it obvious to incorporate a plurality of lenses into the measurement system of Lisogurski and to

increase emitter pulse rate, as taught by both Lisogurski and Carlson, in order to optimize power consumption and increase the signal-to-noise ratio of measured signals. Ex.1003, ¶192. A skilled person reading Lisogurski and Carlson would have looked to other references that disclosed additional techniques for improving the operation of optical sensing systems. *Id.* It was part of the ordinary design process to look for ways to improve the operation of a device by looking to complementary designs and techniques. *Id.*

Lisogurski recognizes that light is attenuated differently depending on the tissue, and that skin pigmentation in particular can have an adverse effect on signal quality. Ex.1011, 19:42-50 ("The interaction of the emitted light with the subject may cause the light to become attenuated… [T]he attenuation or the light may depend on… the tissue with which the light interacts."), 44:43-48 ("The red waveforms may be 25% of the intensity of the IR waveforms, as may occur in patients with dark skin pigmentation"). Mannheimer describes a solution to this problem, teaching that interference from skin can be removed by using signals detected from LEDs spaced different distances from a detector. Ex.1003, ¶193; Ex.1008, 3:25-35, 5:1-5.

A skilled person would have looked to Mannheimer for the additional reason that it teaches how to position emitters at different distances relative to a detector. Ex.1003, ¶194. While Lisogurski teaches using multiple light sources and multiple

detectors "which may be spaced apart," Ex.1011, 17:45, it does not specifically identify the spacing that should be used. A person of ordinary skill would have looked to other prior art for guidance on how to arrange LEDs with respect to a sensor, one example of which is described in Mannheimer. Ex.1003, ¶194.

Lisogurski, Carlson and Mannheimer are also analogous references, each describing techniques for improving the measurements taken by optical sensing devices, such as pulse oximeters. Ex.1003, ¶195. The skilled person would have considered the references together when implementing a system based on Lisogurski's teachings. Ex.1003, ¶¶195-96.

a) Claims 8 and 16

Claims 8 and 16 depend from claims 5 and 13, respectively, and specify "*wherein the receiver is located a first distance from a first one of the plurality of light emitting diodes and a different, second distance from a second one of the plurality of light emitting diodes such that the receiver receives a first signal from the first light emitting diode and a second signal from the second light emitting diode*."

Fig. 1B of Mannheimer shows emitters E_1 and E_2 and detector D. Ex.1008, 5:58-62.

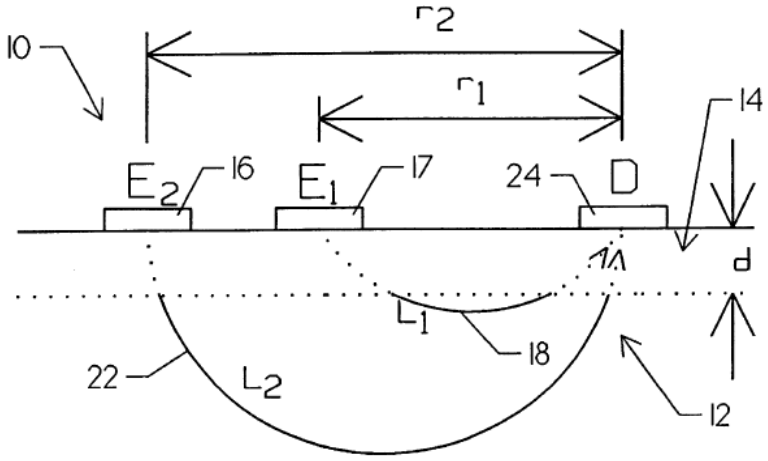

FIG. 1 B

Emitter E_1 is located a first distance r_1 from the detector. Ex.1008, 3:23; Ex.1003, ¶198. Emitter E_2 is located a second distance r_2 from the detector, wherein r_2 is greater than r_1. Ex.1008, 3:24; Ex.1003, ¶198. The detector receives light signal 18 from emitter E_1 that has a path length L_1. Ex.1008, 3:18-21; Ex.1003, ¶198. The detector receives light signal 22 from emitter E_2 that has a path length L_2, wherein L_2 is greater than L_1. Ex.1008, 3:19-22; Ex.1003, ¶198.

A skilled person would have found it obvious to spatially arrange the emitters and detector of the Lisogurski sensor in the manner described by Mannheimer. Ex.1003, ¶199. Lisogurski teaches using multiple light sources and multiple detectors "which may be spaced apart." Ex.1011, 17:45. It also indicates that "[a]ny suitable configuration" of sources and detectors maybe used. Ex.1011, 17:39-45. A skilled person considering how to implement the Lisogurski system would have considered other prior art for guidance, and by so doing, would have

considered Mannheimer, which provides extensive guidance on how to configure emitters and detectors being used in optical sensing. Ex.1003, ¶199. That person would have been particularly motivated by the benefits identified in Mannheimer, including that its configuration allows for removing the effects of light reflected by a surface layer of skin so that a signal of interest can be extracted from a deeper tissue layer. Ex.1003, ¶200; Ex.1008, 3:25-35, 5:1-5. A skilled person thus would have been motivated to arrange the Lisogurski emitters relative to the detector as taught by Mannheimer to remove interference caused by a person's skin, which Lisogurski recognizes can be a problem. Ex.1003, ¶200.

b) Claims 9 and 17

Claims 9 and 17 depend from claims 8 and 16, respectively, and specify "*wherein the output signal is generated in part by comparing the first and second signals*." Mannheimer teaches "calculating an arterial oxygen saturation level of [a] patient" from the intensity of signals 18 and 22. Ex.1008, 2:16-18. This calculation includes determining a first intensity I_1 corresponding to the signal 18 detected from light emitted by E_1 and a second intensity I_2 corresponding to the signal 20 detected from light emitted by E_2. Ex.1008, 3:35-54, 4:15-20; Ex.1003, ¶202. Mannheimer then teaches calculating a ratio R from I_1 and I_2 for purposes of calculating "a result related only to the arterial blood saturation of…deeper tissue." Ex.1008, 3:55-5:9; *see also*, Ex.1008, 5:23-57 (providing an alternative calculation

for the ratio R based on I_1 and I_2). Mannheimer therefore teaches comparing a signal 18 reflected by surface tissue and a signal 22 reflected by deep tissue in order to subtract the effects of light reflected by the surface tissue. Ex.1003, ¶203.

It would have been obvious for a skilled person to configure the Lisogurski sensor to perform the comparison in the manner described by Mannheimer in order to remove the effects of noise at the surface layer of skin. Ex.1003, ¶204. Lisogurski recognizes that light is attenuated differently depending on the tissue, and that skin pigmentation in particular can have an adverse effect on signal quality. Ex.1011, 19:42-50, 44:43-48. This adverse effect can be mitigated by implementing the teachings of Mannheimer, which removes light reflected by the surface layer of skin. Ex.1003, ¶204. A skilled person would be motivated to implement the comparison described by Mannheimer in the system of Lisogurski in order to increase a signal-to-noise ratio and provide an improved measurement device. Ex. 1003, ¶204.

C. No Secondary Considerations Exist

As described above, Lisogurski alone or in view of Carlson and/or Mannheimer teaches systems that render *prima facie* obvious the challenged claims of the ’533 patent. No secondary indicia of non-obviousness exist having a nexus to the putative “invention” of the ’533 patent contrary to that conclusion.

Apple reserves its right to respond to any assertion of secondary indicia of non-obviousness advanced by Patent Owner.

VII. Conclusion

Petitioner respectfully submits that the evidence presented in this Petition establishes a reasonable likelihood that Petitioner will prevail in establishing the challenged claims are unpatentable, and requests that Trial be instituted.

Dated: April 10, 2019

Respectfully Submitted,

/Jeffrey P. Kushan/

Jeffrey P. Kushan
Registration No. 43,401
Sidley Austin LLP
1501 K Street NW
Washington, DC 20005
jkushan@sidley.com
(202) 736-8914

Lead Counsel for Petitioner

Ching-Lee Fukuda
Reg. No. 44,334
Sidley Austin LLP
787 Seventh Avenue
New York, NY 10019
clfukuda@sidley.com
(212) 839-7364

Thomas A. Broughan III
Reg. No. 66,001
Kathi Cover
Reg. No. 37,803
Sidley Austin LLP
1501 K Street NW
Washington, DC 20005
tbroughan@sidley.com
kcover@sidley.com
(202) 736-8314

Backup Lead Counsel for Petitioner

Claim Appendix

5. A measurement system comprising:

a light source comprising a plurality of semiconductor sources that are light emitting diodes, the light emitting diodes configured to generate an output optical beam with one or more optical wavelengths, wherein at least a portion of the one or more optical wavelengths is a near-infrared wavelength between 700 nanometers and 2500 nanometers,

the light source configured to increase signal-to-noise ratio by increasing a light intensity from at least one of the plurality of semiconductor sources and by increasing a pulse rate of at least one of the plurality of semiconductor sources;

an apparatus comprising a plurality of lenses configured to receive a portion of the output optical beam and to deliver an analysis output beam to a sample

a receiver configured to receive and process at least a portion of the analysis output beam reflected or transmitted from the sample and to generate an output signal, wherein the receiver is configured to be synchronized to the light source;

a personal device comprising a wireless receiver, a wireless transmitter, a display, a microphone, a speaker, one or more buttons or knobs, a microprocessor and a touch screen, the personal device configured to receive and process at least a portion of the output signal, wherein the personal device is configured to store and display the processed output signal, and wherein at least a portion of the processed output signal is

configured to be transmitted over a wireless transmission link; and

a remote device configured to receive over the wireless transmission link an output status comprising the at least a portion of the processed output signal, to process the received output status to generate processed data and to store the processed data.

7. The system of claim 5, wherein the remote device is further configured to transmit at least a portion of the processed data to one or more other locations, wherein the one or more other locations is selected from the group consisting of the personal device, a doctor, a healthcare provider, a cloud-based server and one or more designated recipients, and wherein the remote device is capable of transmitting information related to a time and a position associated with the at least a portion of the processed data.

8. The system of claim 5, wherein the receiver is located a first distance from a first one of the plurality of light emitting diodes and a different, second distance from a second one of the plurality of light emitting diodes such that the receiver receives a first signal from the first light emitting diode and a second signal from the second light emitting diode.

9. The system of claim89, wherein the output signal is generated in part by comparing the first and second signals.

10. The system of claim 5, wherein the output signal comprises one or more physiological parameters, and the remote device is capable of storing a history of at least a portion of the one or more physiological parameters over a specified period of time.

13. A measurement system comprising:

a wearable measurement device for measuring one or more physiological parameters, including a light source comprising a plurality of semiconductor sources that are light emitting diodes, the light emitting diodes configured to generate an output optical beam with one or more optical wavelengths, wherein at least a portion of the one or more optical wavelengths is a near-infrared wavelength between 700 nanometers and 2500 nanometers,

the light source configured to increase signal-to-noise ratio by increasing a light intensity from at least one of the plurality of semiconductor sources and by increasing a pulse rate of at least one of the plurality of semiconductor sources; the wearable measurement device comprising a plurality of lenses configured to receive a portion of the output optical beam and to deliver an analysis output beam to a sample;

the wearable measurement device further comprising a receiver configured to receive and process at least a portion of the analysis output beam reflected or transmitted from the sample and to generate an output signal, wherein the wearable measurement device receiver is configured to be synchronized to pulses of the light source;

a personal device comprising a wireless receiver, a wireless transmitter, a display, a microphone, a speaker, one or more buttons or knobs, a microprocessor and a touch screen, the personal device configured to receive and process at least a portion of the output signal, wherein the personal device is configured to store and display the processed output signal, and wherein at least a portion of the processed output signal is configured to be transmitted over a wireless transmission link; and

a remote device configured to receive over the wireless transmission link an output status comprising the at least a portion of the processed output signal, to process the received output status to generate processed data and to store the processed data, and wherein the remote device is capable of storing a history of at least a portion of the received output status over a specified period of time.

15. The system of claim 13, wherein the remote device is further configured to transmit at least a portion of the processed data to one or more other locations, wherein the one or more other locations is selected from the group consisting of the personal device, a doctor, a healthcare provider, a cloud-based server and one or more designated recipients, and wherein the remote device is capable of transmitting information related to a time and a position associated with the at least a portion of the processed data.

16. The system of claim 13, wherein the receiver is located a first distance from a first one of the plurality of light emitting diodes and a different, second distance from a second one of the plurality of light emitting diodes such that the receiver receives a first signal from the first light emitting diode and a second signal from the second light emitting diode.

17. The system of claim 16, wherein the output signal is generated in part by comparing the first and second signals.

CERTIFICATE OF COMPLIANCE

I hereby certify that this brief complies with the type-volume limitations of 37 C.F.R. § 42.24, because it contains 13,949 words (as determined by the Microsoft Word word-processing system used to prepare the brief), excluding the parts of the brief exempted by 37 C.F.R. § 42.24.

Dated: April 10, 2019

Respectfully Submitted,

/Jeffrey P. Kushan/
Jeffrey P. Kushan
Reg. No. 43,401
SIDLEY AUSTIN LLP
1501 K Street NW
Washington, DC 20005
Attorney for Petitioner

CERTIFICATE OF SERVICE

I hereby certify that on this 10th day of April, 2019, copies of this Petition for *Inter Partes* Review, Attachments and Exhibits have been served in its entirety by Federal Express on the following counsel of record for Patent Owner:

David Bir
Brooks, Kushman P.C./Cheetah
Omni MedSci
1000 Town Center
Twenty Second Floor
Southfield, MI 48075

Dr. Mohammed N. Islam
Omni MedSci, Inc.
1718 Newport Creek Drive,
Ann Arbor, Michigan 48103

Honigman LLP
c/o Sarah Waidelich
315 E Eisenhower Pkwy
Ann Arbor, MI 48108

Regents of Michigan
Office of Technology Transfer
C/O Richard Brandon
1600 Huron Pkwy, Building 520,
2nd Floor
Ann Arbor, MI 48109-2590

Thomas A. Lewry
John S. LeRoy
Robert C. Tuttle
John M. Halan
Christopher C. Smith
Brooks, Kushman P.C./Cheetah
Omni MedSci
1000 Twon Center
Twenty Second Floor
Southfield, MI 48075

Dated: April 10, 2019

Respectfully submitted,

/Jeffrey P. Kushan/
Jeffrey P. Kushan
Reg. No. 43,401
Attorney for Petitioner

CERTIFICATE OF SERVICE

I hereby certify that on the 10th day of April, 2019, copies of this Petition for *Inter Partes* Review, Attachments and Exhibits will be served in its entirety by U.S. mail on the following counsel of record for Patent Owner:

T. John Ward, Jr.
Claire Abernathy Henry
WARD, SMITH & HILL, PLLC
P.O. Box 1231
Longview, Texas 75606

Dated: April 10, 2019

Respectfully submitted,

/Jeffrey P. Kushan/
Jeffrey P. Kushan
Reg. No. 43,401
Attorney for Petitioner