US006641533B2

(12) **United States Patent**
Causey, III et al.

(10) **Patent No.: US 6,641,533 B2**
(45) **Date of Patent: *Nov. 4, 2003**

(54) **HANDHELD PERSONAL DATA ASSISTANT (PDA) WITH A MEDICAL DEVICE AND METHOD OF USING THE SAME**

(75) Inventors: **James D. Causey, III**, Simi Valley, CA (US); **Richard E. Purvis**, Pasadena, CA (US); **James L. Henke**, Simi Valley, CA (US)

(73) Assignee: **Medtronic MiniMed, Inc.**, Northridge, CA (US)

(*) Notice: Subject to any disclaimer, the term of this patent is extended or adjusted under 35 U.S.C. 154(b) by 56 days.

This patent is subject to a terminal disclaimer.

(21) Appl. No.: **09/935,827**

(22) Filed: **Aug. 23, 2001**

(65) **Prior Publication Data**

US 2002/0002326 A1 Jan. 3, 2002

Related U.S. Application Data

(63) Continuation of application No. 09/487,423, filed on Jan. 20, 2000, and a continuation of application No. 09/377,472, filed on Aug. 19, 1999, and a continuation of application No. 09/334,996, filed on Jun. 17, 1999, which is a continuation of application No. 09/334,858, filed on Jun. 16, 1999, and a continuation of application No. 09/246,661, filed on Feb. 5, 1999, now Pat. No. 6,248,067.

(60) Provisional application No. 60/103,812, filed on Oct. 8, 1998, and provisional application No. 60/096,994, filed on Aug. 18, 1998.

(51) **Int. Cl.**[7] **A61B 5/00**

(52) **U.S. Cl.** **600/300**; 600/316; 604/66; 128/897; 128/903

(58) **Field of Search** 600/300–301, 600/316, 347, 365; 128/903–904, 920; 702/104; 379/106.1–106.2; 705/2–4; 340/573.1; 604/66

(56) **References Cited**

U.S. PATENT DOCUMENTS

5,417,222 A		5/1995	Dempsey et al.	
5,507,288 A		4/1996	Bocker et al.	
5,961,451 A	*	10/1999	Reber et al.	600/322
6,295,506 B1	*	9/2001	Heinonen et al.	702/104

FOREIGN PATENT DOCUMENTS

EP	0880936	12/1998	A61B/5/00
WO	9728736	8/1997	A61B/5/00
WO	0019887	4/2000	A61B/5/00
WO	0078210	12/2000	A61B/5/00
WO	0128416	4/2001	A61B/5/00
WO	0128495	4/2001	
WO	0139089	5/2001	G06F/17/60
WO	0152718	7/2001	
WO	0156454	8/2001	

* cited by examiner

Primary Examiner—Max F. Hindenburg
Assistant Examiner—Michael Astorino
(74) *Attorney, Agent, or Firm*—Medtronic MiniMed, Inc.

(57) **ABSTRACT**

A medical device module for use in a system with a remote programmer and/or a personal data assistant (PDA) with at least one medical device includes a housing, at least one medical device and a processor. The housing is adapted to couple with the PDA. The at least one medical device interface is coupled to the housing for interfacing with the at least one medical device. The processor is coupled to the at least one medical device interface to process data from the at least one medical device. The processor is also capable of interfacing with the PDA.

22 Claims, 17 Drawing Sheets

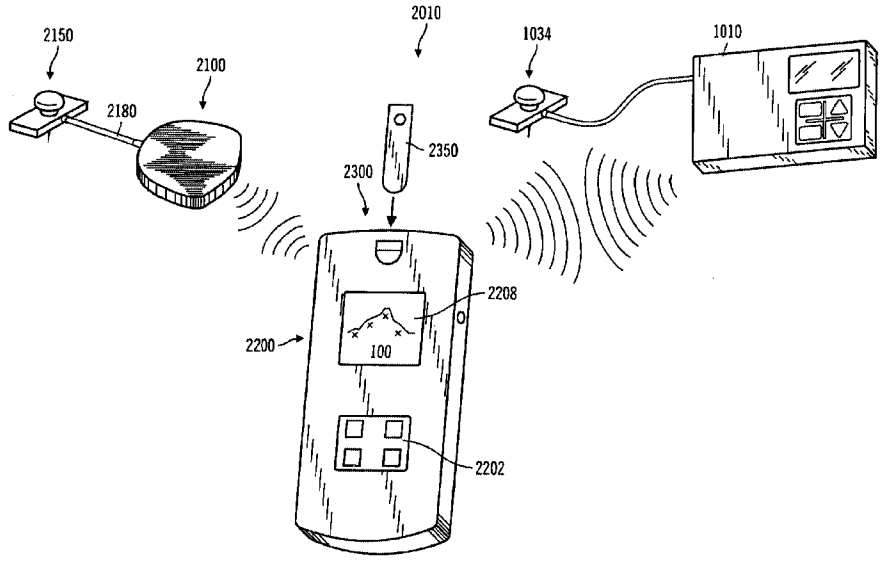

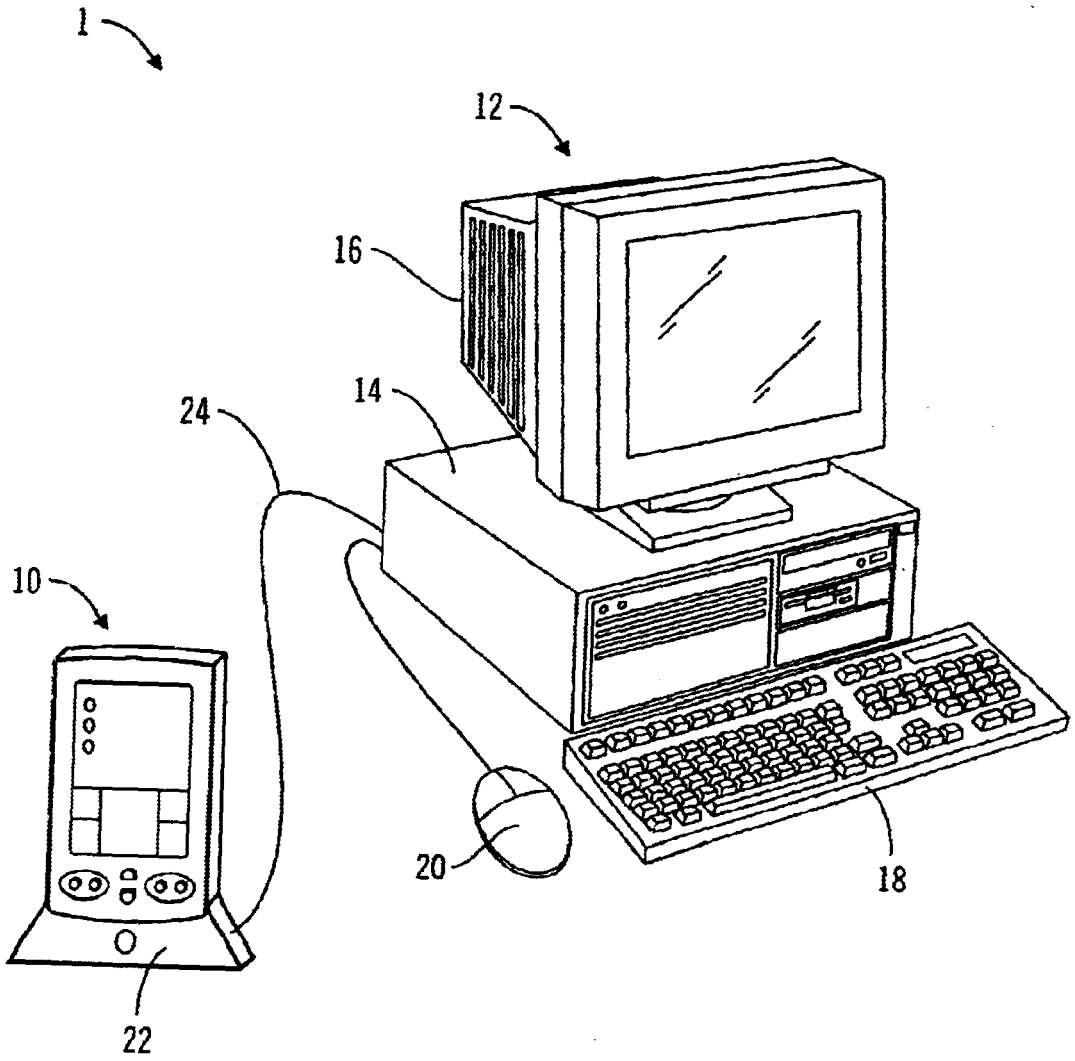

FIG. 1

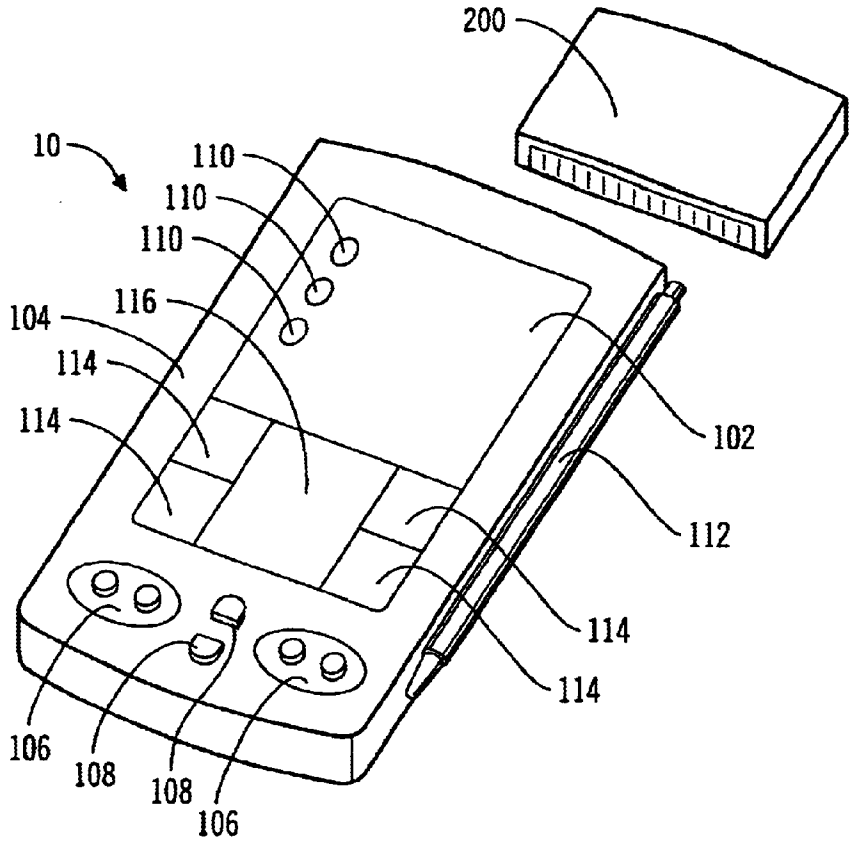
200
10
110
110
110
116
104
114
114
102
112
114
114
106
108
108
106

FIG. 2

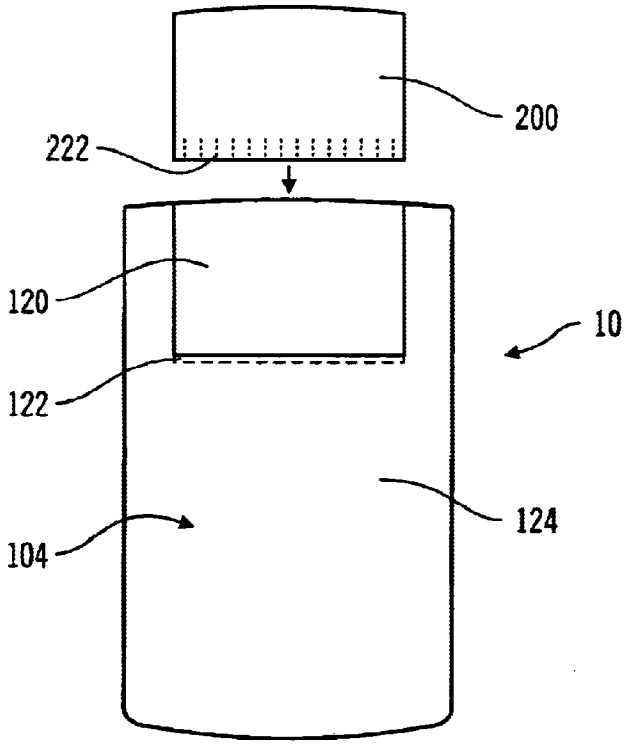
200
222
120
10
122
124
104

FIG. 3

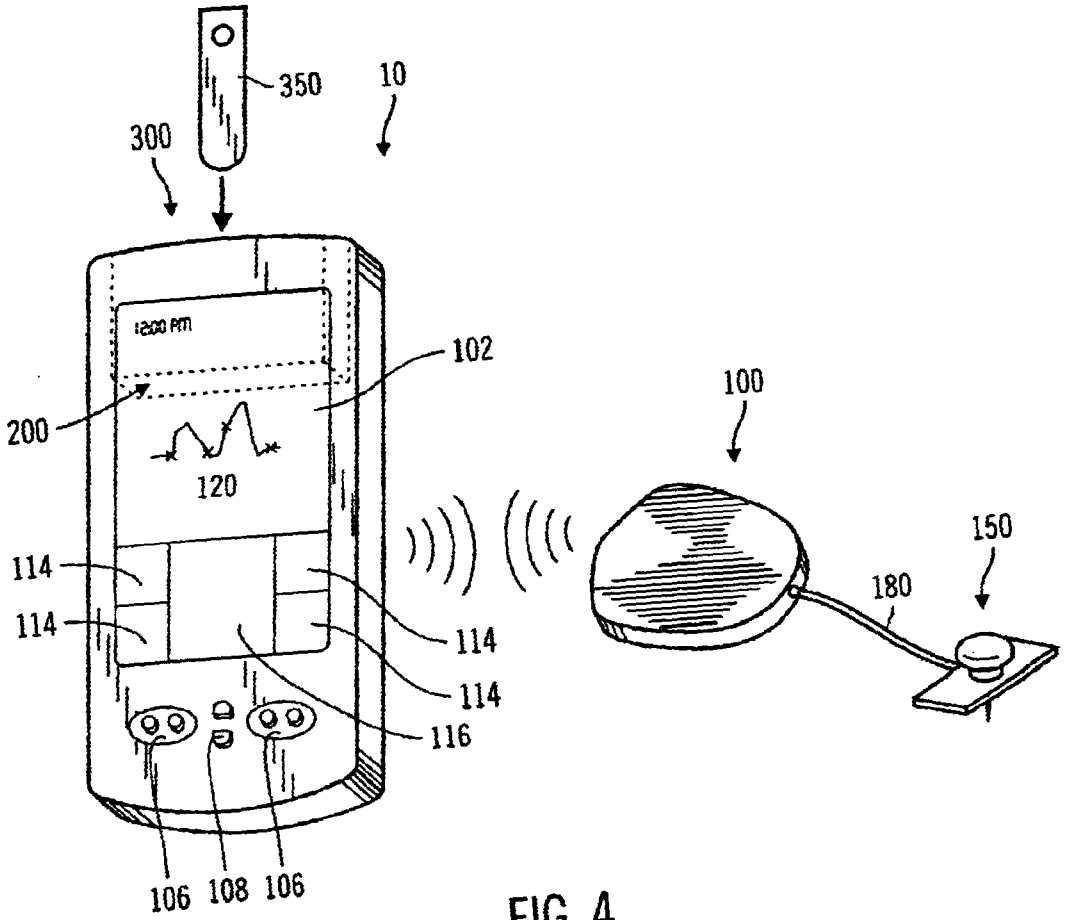
350
10
300
12:00 PM
102
200
120
100
150
180
114
114
114
114
116
106
108
106

FIG. 4

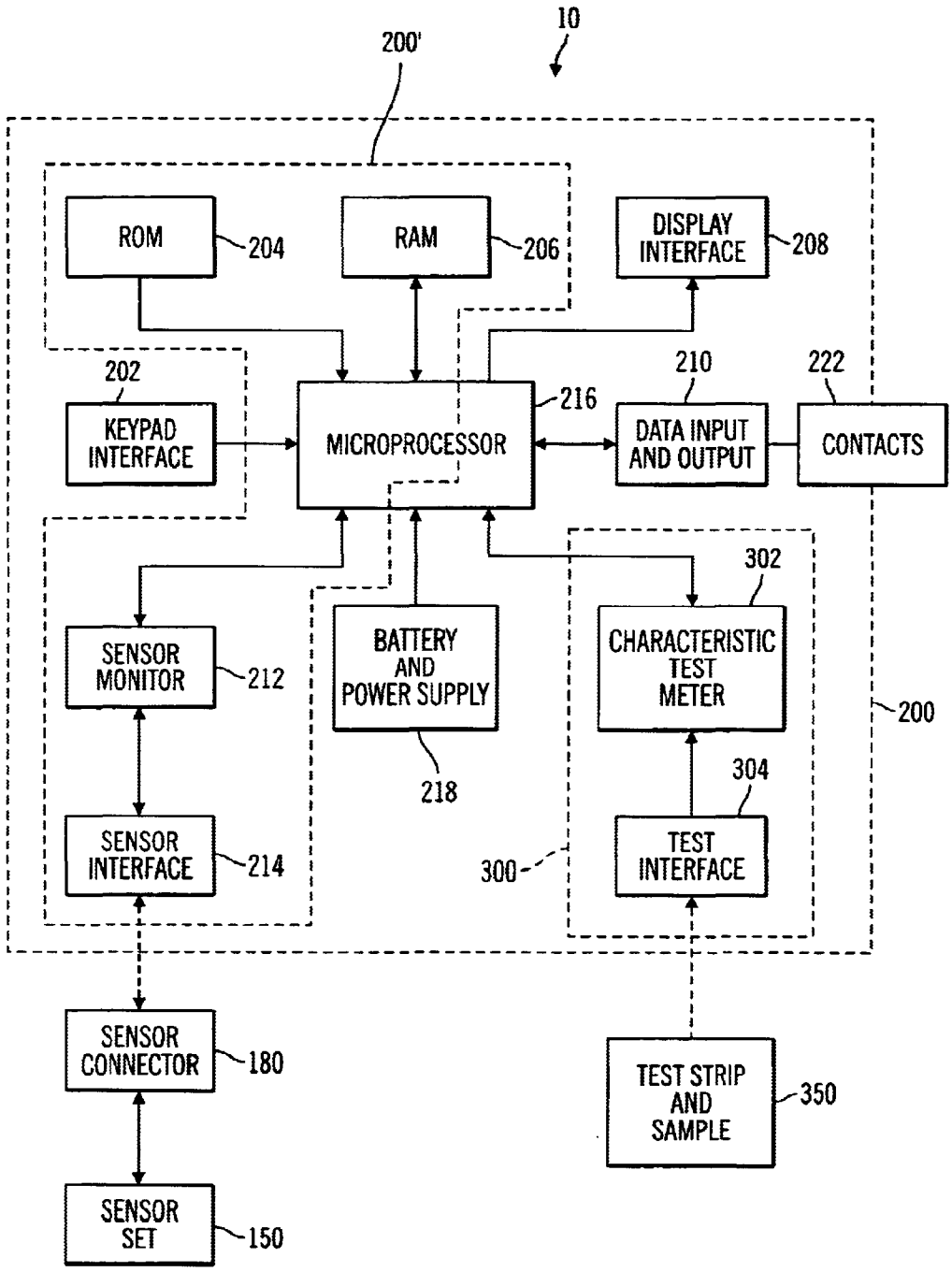
10
200'
ROM
204
RAM
206
DISPLAY INTERFACE
208
202
KEYPAD INTERFACE
MICROPROCESSOR
216
210
DATA INPUT AND OUTPUT
222
CONTACTS
302
SENSOR MONITOR
212
BATTERY AND POWER SUPPLY
218
CHARACTERISTIC TEST METER
200
304
SENSOR INTERFACE
214
300
TEST INTERFACE
SENSOR CONNECTOR
180
TEST STRIP AND SAMPLE
350
SENSOR SET
150

FIG. 5

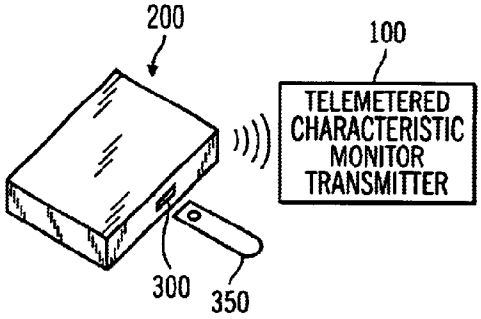

FIG. 6

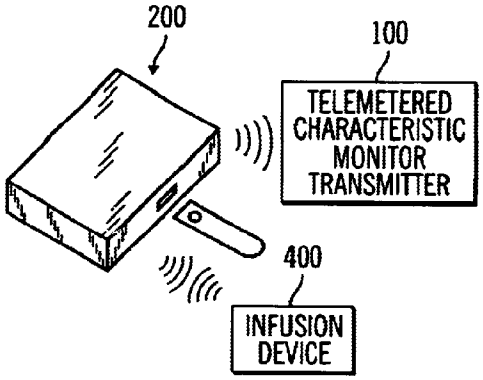

FIG. 8

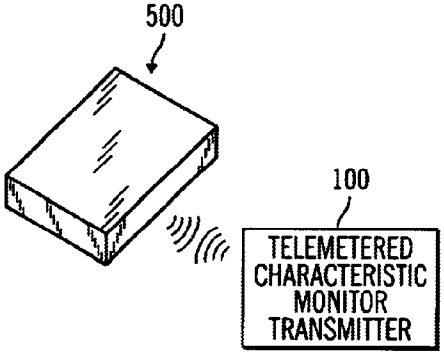

FIG. 11

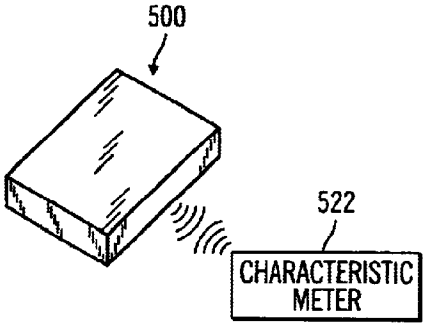

FIG. 12

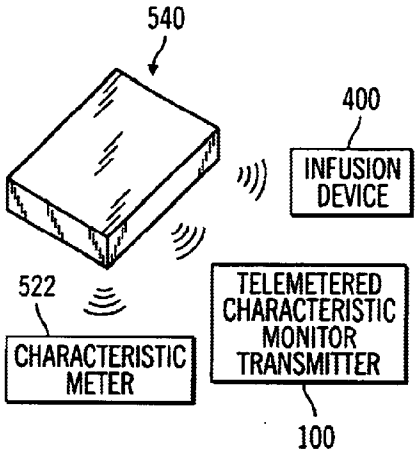

FIG. 13

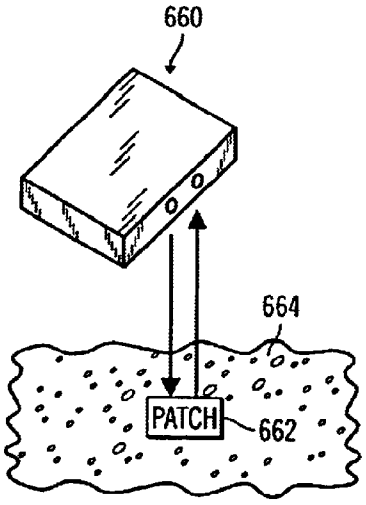

FIG. 19

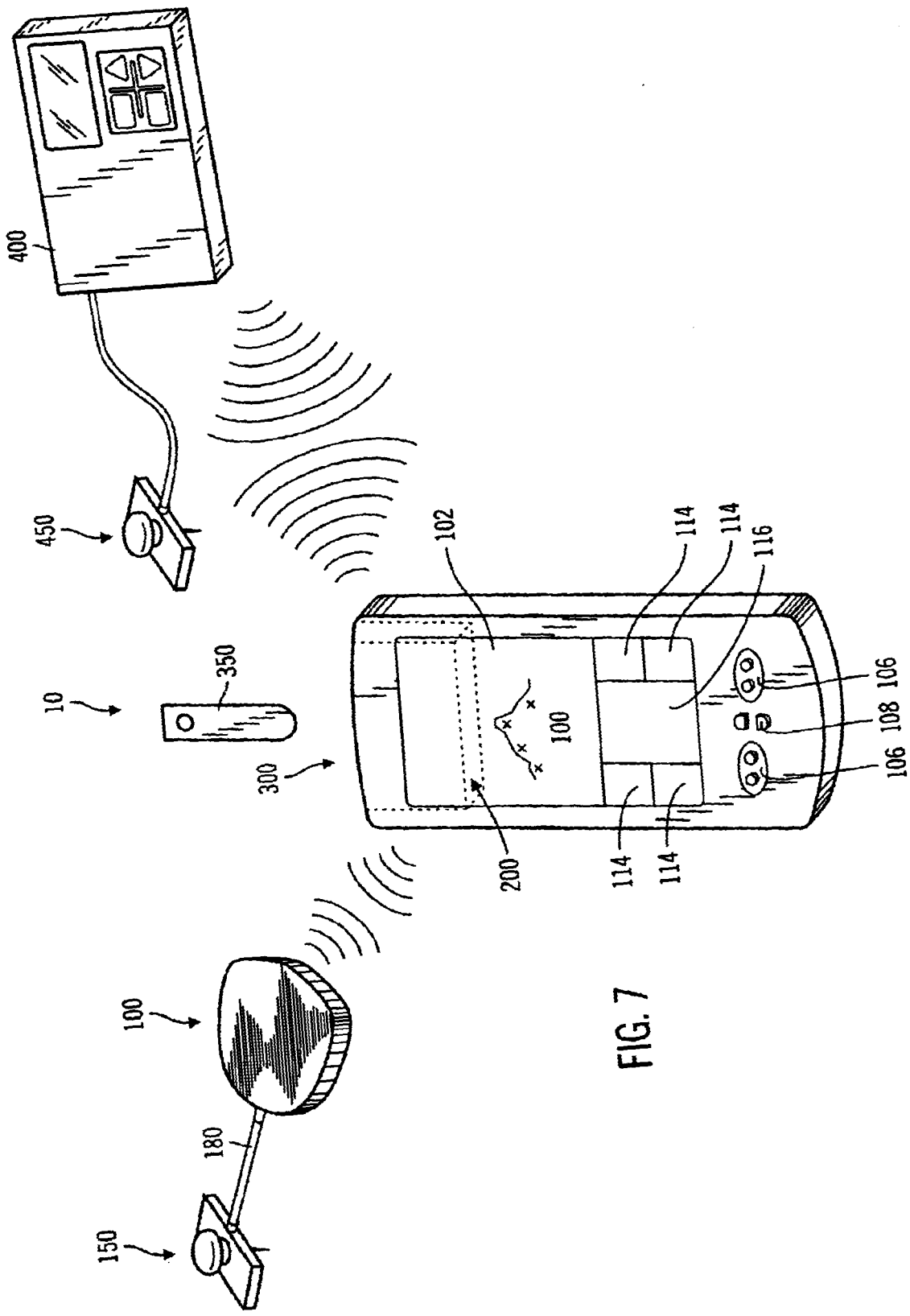
400
450
10
350
300
102
114
114
116
100
106
108
106
200
114
114
100
180
150

FIG. 7

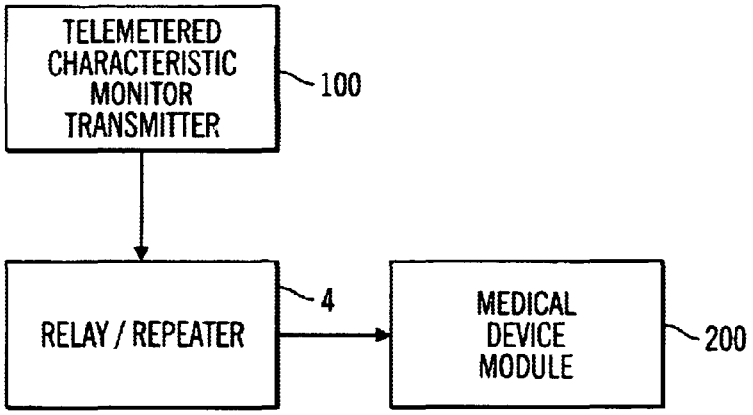
TELEMETERED CHARACTERISTIC MONITOR TRANSMITTER
100
RELAY / REPEATER
4
MEDICAL DEVICE MODULE
200

FIG. 9

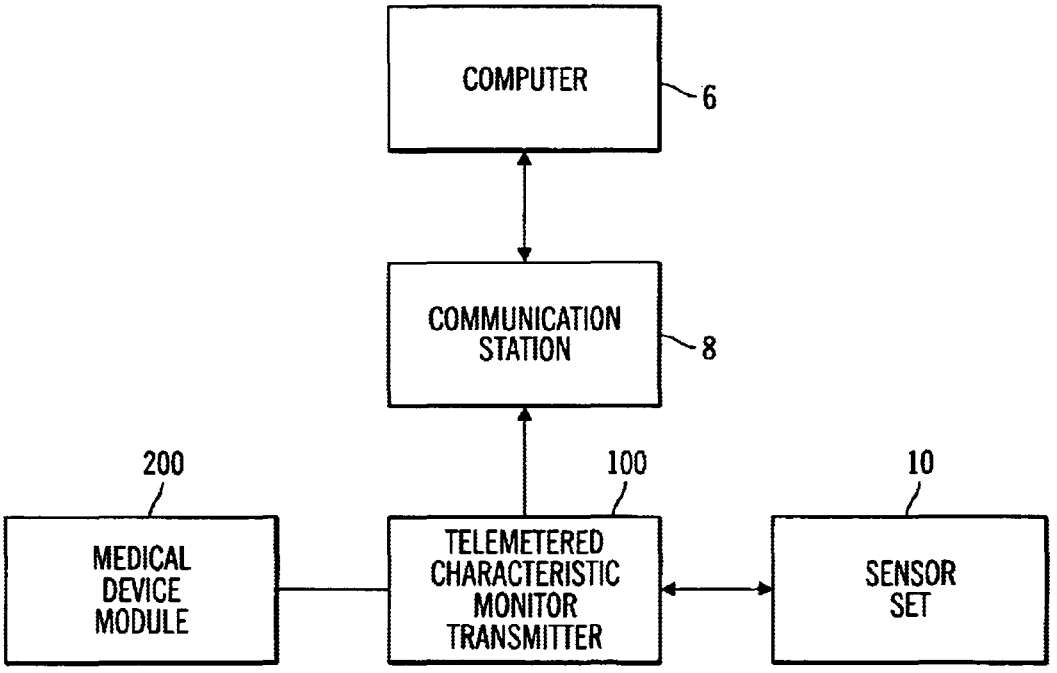
COMPUTER
6
COMMUNICATION STATION
8
200
MEDICAL DEVICE MODULE
100
TELEMETERED CHARACTERISTIC MONITOR TRANSMITTER
10
SENSOR SET

FIG. 10

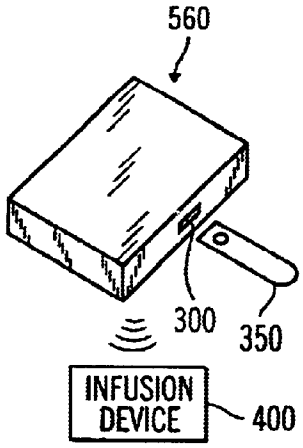

FIG. 14

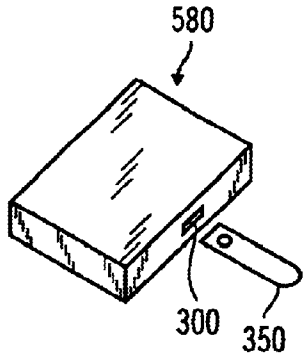

FIG. 15

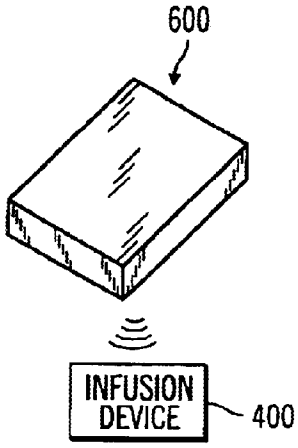

FIG. 16

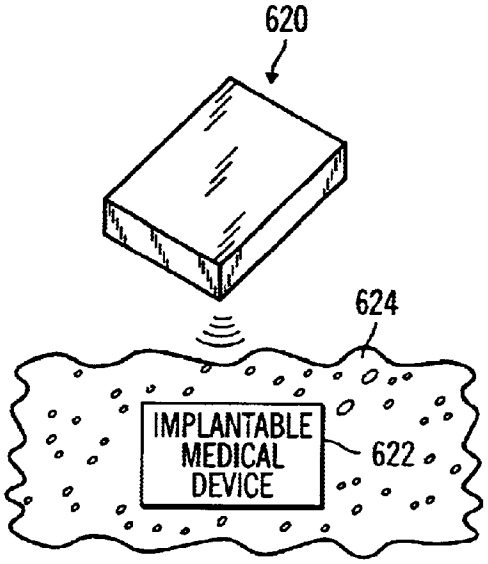

FIG. 17

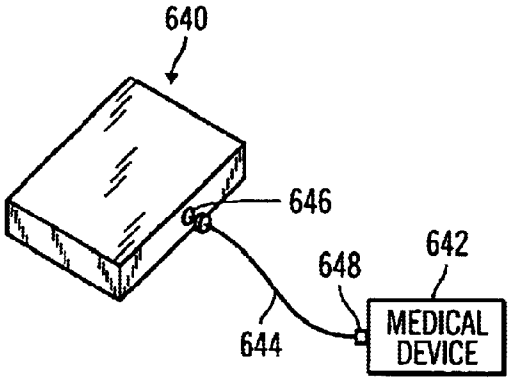

FIG. 18

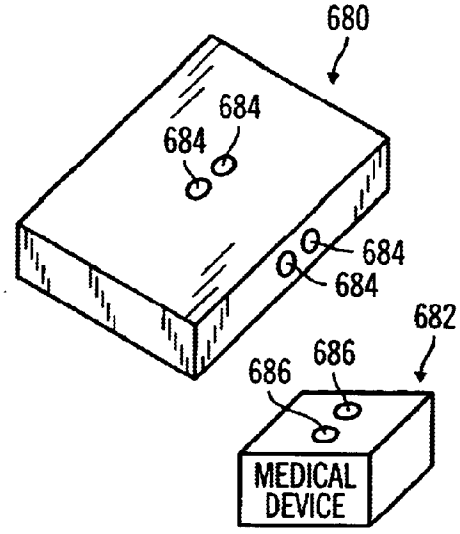

FIG. 20

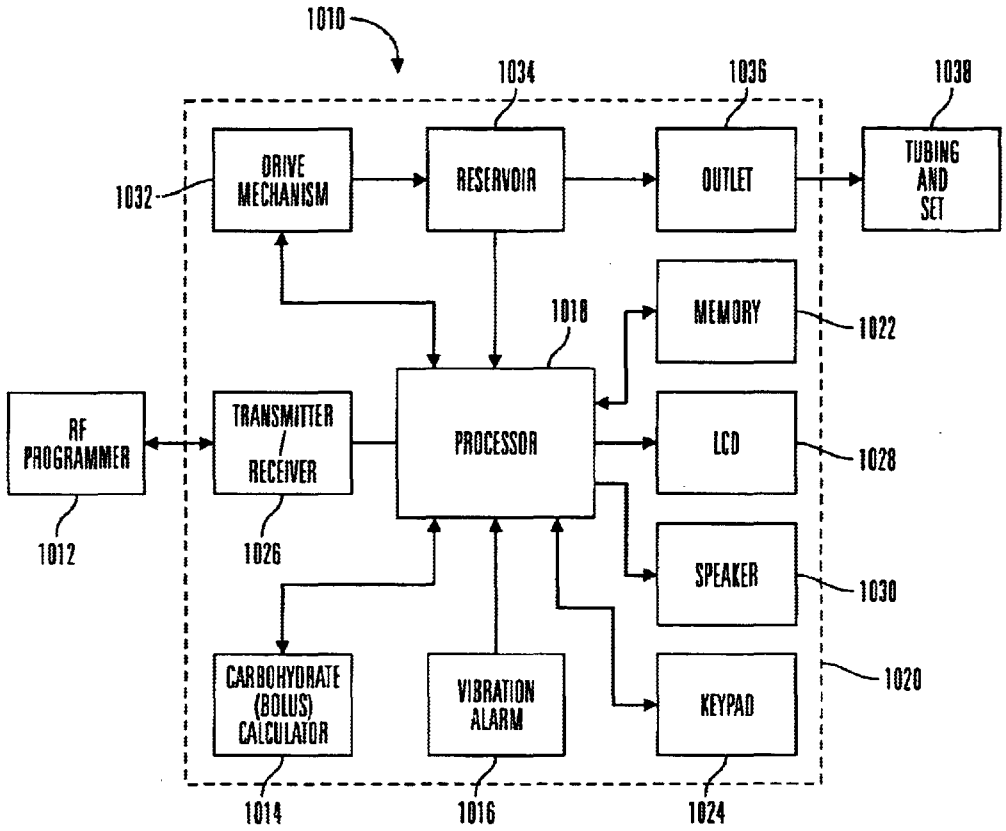
1010
1034
1036
1038
DRIVE MECHANISM
RESERVOIR
OUTLET
TUBING AND SET
1032
MEMORY
1018
1022
RF PROGRAMMER
TRANSMITTER / RECEIVER
PROCESSOR
LCD
1028
1012
1026
SPEAKER
1030
CARBOHYDRATE (BOLUS) CALCULATOR
VIBRATION ALARM
KEYPAD
1020
1014
1016
1024

FIG. 21

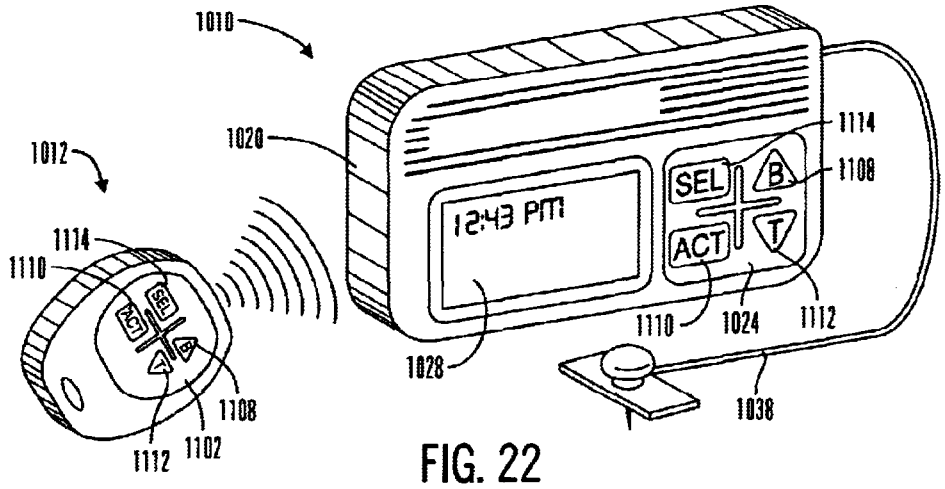
1010
1020
1012
1114
1108
SEL
B
12:43 PM
ACT
T
1114
1110
1110
1024
1112
1028
1108
1112
1102
1038

FIG. 22

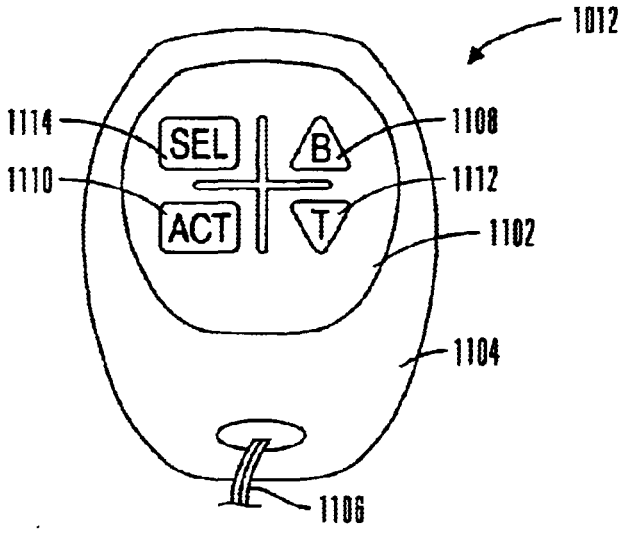
1012
1114
SEL
B
1108
1110
1112
ACT
T
1102
1104
1106

FIG. 23

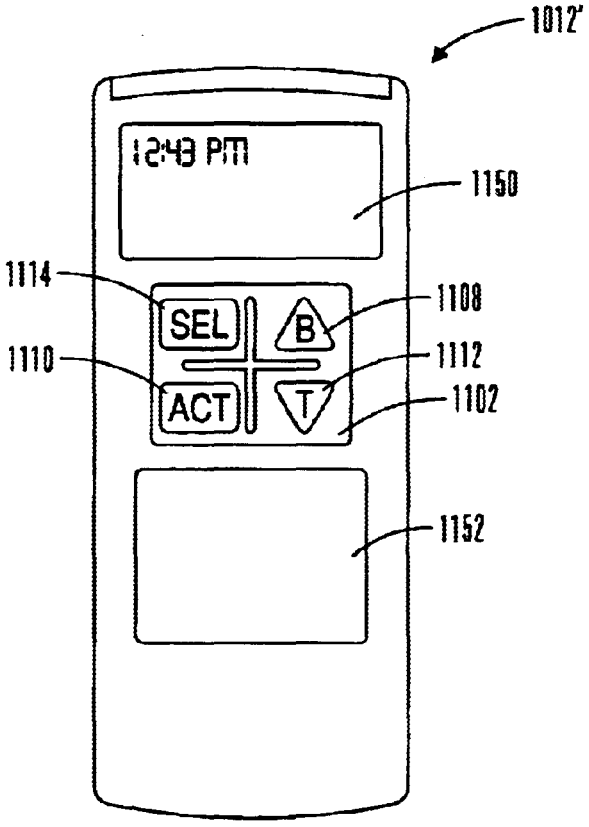
1012'
12:43 PM
1150
1114
SEL
B
1108
1110
1112
ACT
T
1102
1152

FIG. 24

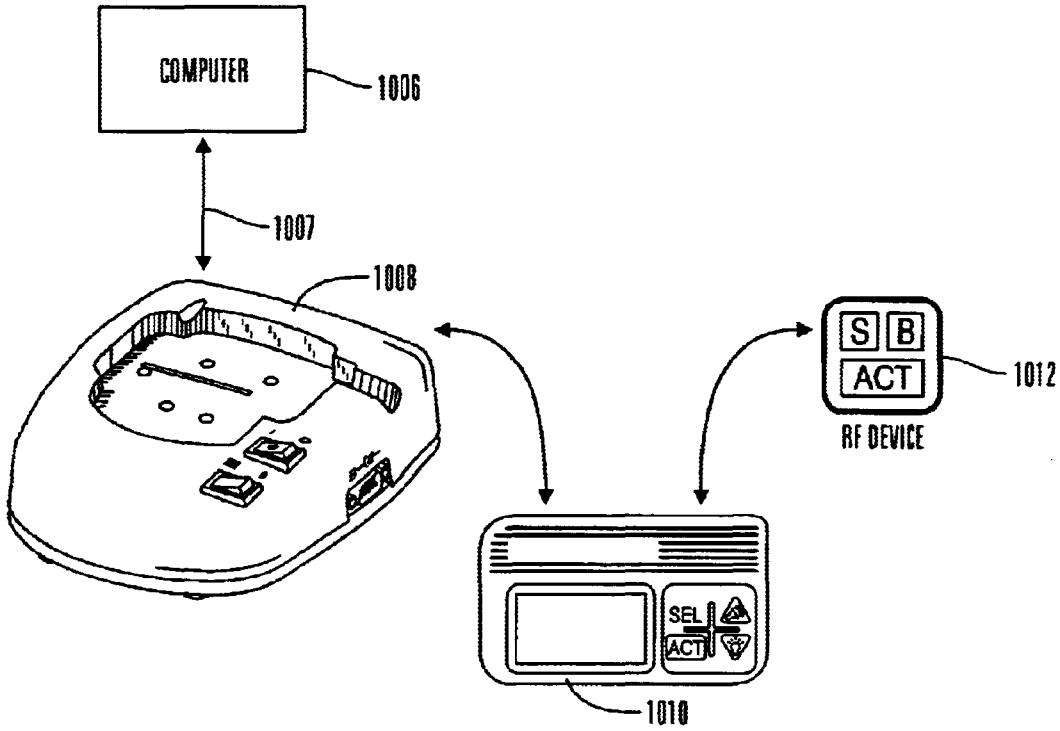
COMPUTER
1006
1007
1008
S
B
ACT
1012
RF DEVICE
SEL
ACT
1010

FIG. 25

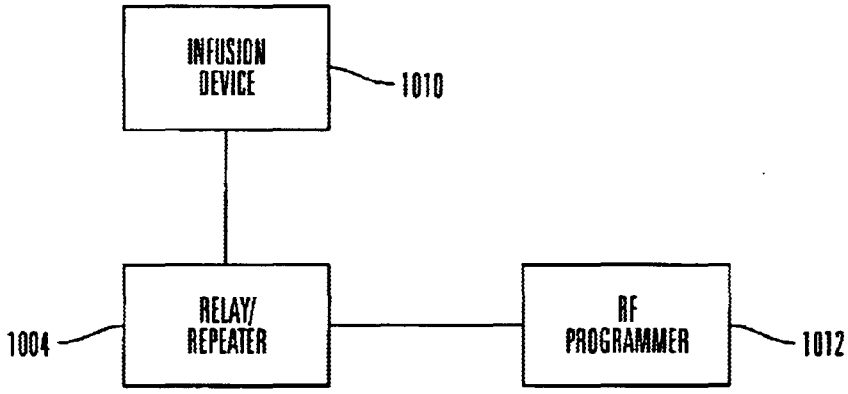
INFUSION DEVICE
1010
1004
RELAY/ REPEATER
RF PROGRAMMER
1012

FIG. 26

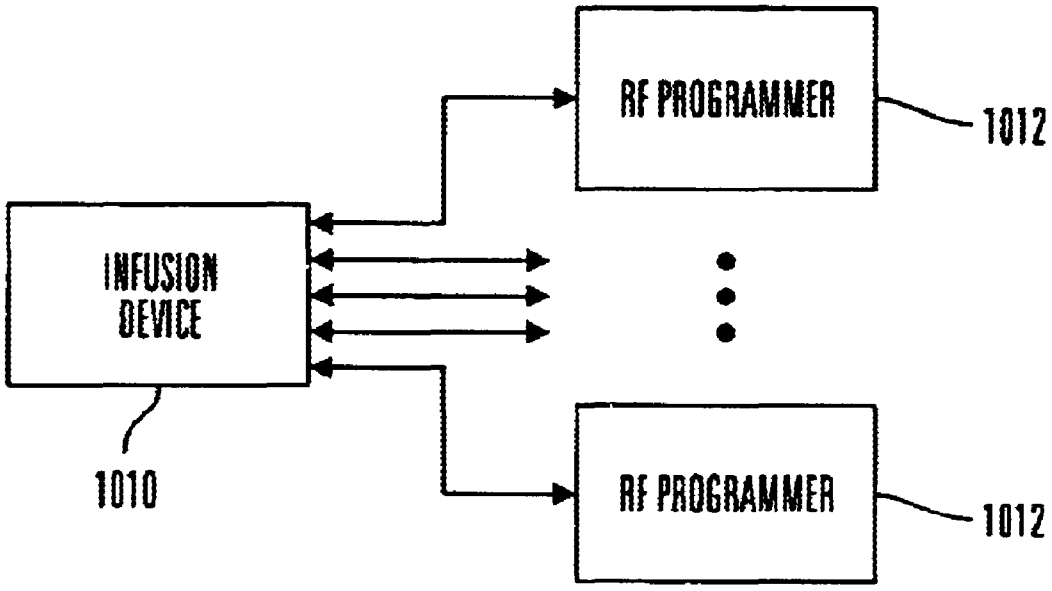
RF PROGRAMMER
1012
INFUSION DEVICE
1010
RF PROGRAMMER
1012

FIG. 27

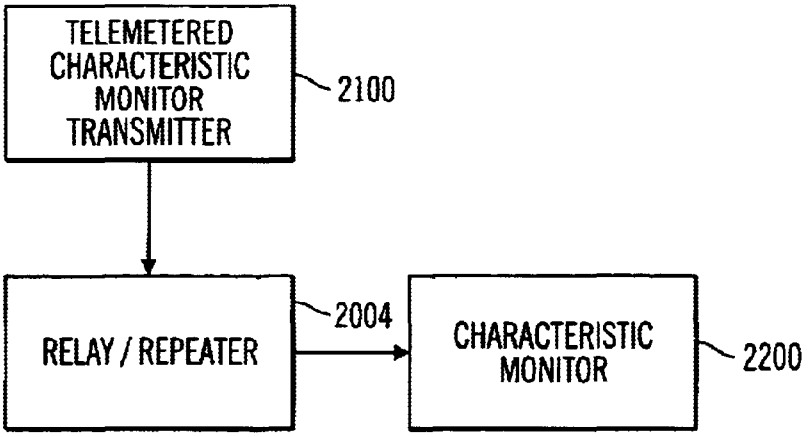
TELEMETERED CHARACTERISTIC MONITOR TRANSMITTER
2100
RELAY / REPEATER
2004
CHARACTERISTIC MONITOR
2200

FIG. 28

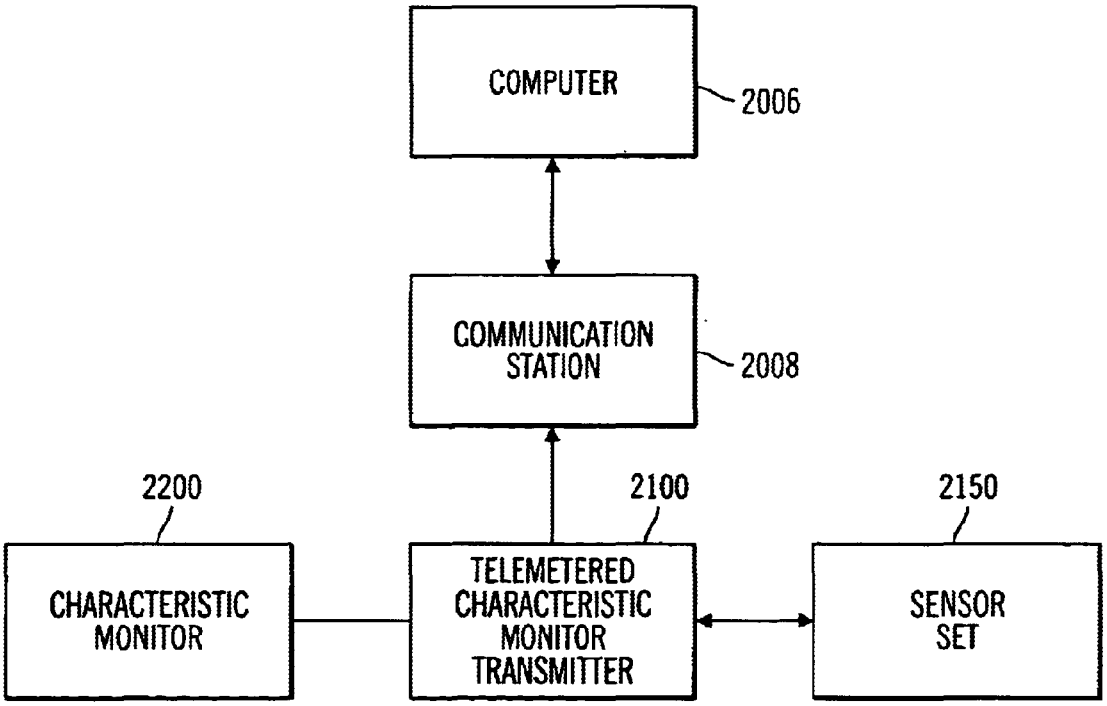
COMPUTER
2006
COMMUNICATION STATION
2008
2200
2100
2150
CHARACTERISTIC MONITOR
TELEMETERED CHARACTERISTIC MONITOR TRANSMITTER
SENSOR SET

FIG. 29

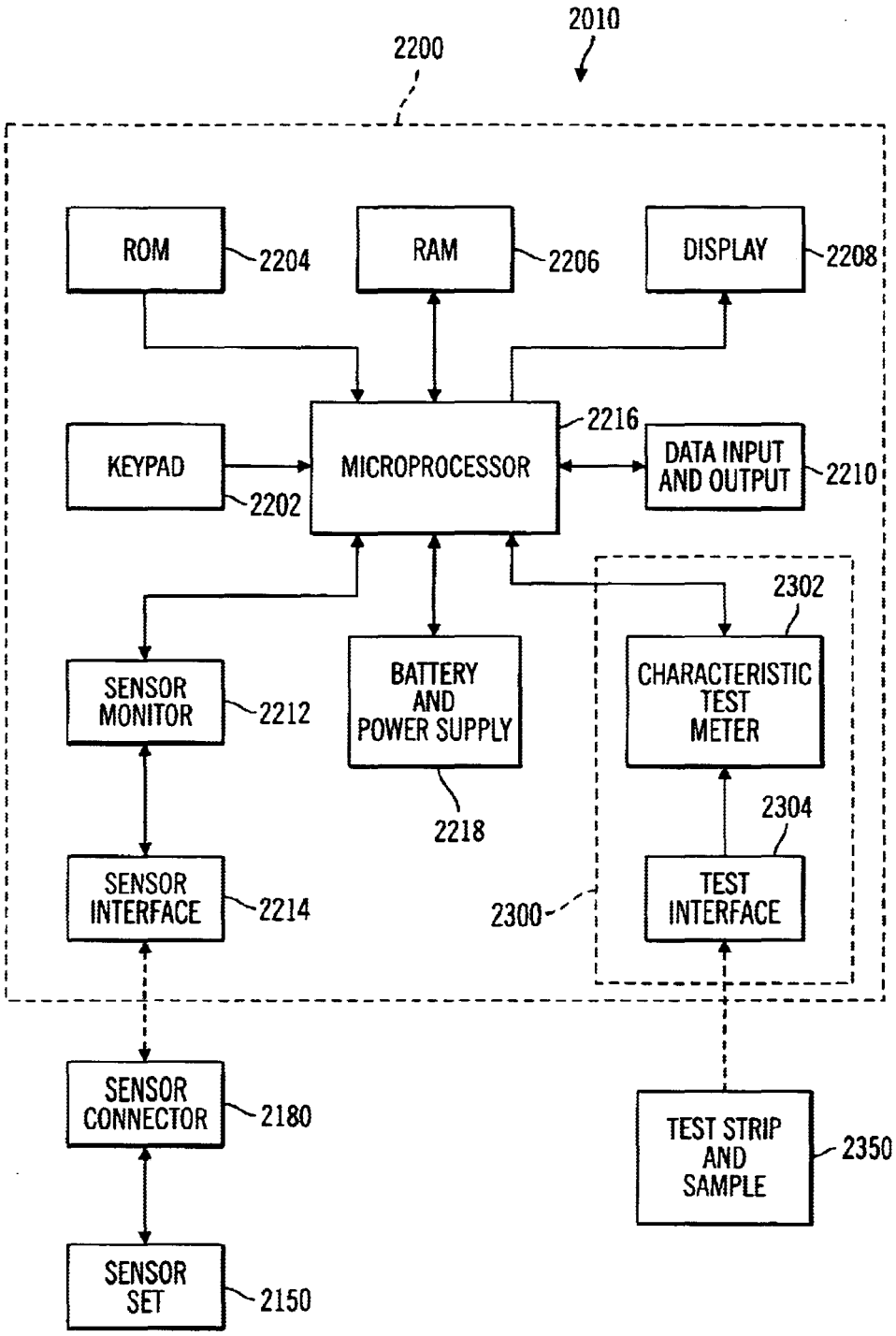
2010
2200
ROM
2204
RAM
2206
DISPLAY
2208
KEYPAD
2202
MICROPROCESSOR
2216
DATA INPUT AND OUTPUT
2210
2302
SENSOR MONITOR
2212
BATTERY AND POWER SUPPLY
2218
CHARACTERISTIC TEST METER
2304
SENSOR INTERFACE
2214
2300
TEST INTERFACE
SENSOR CONNECTOR
2180
TEST STRIP AND SAMPLE
2350
SENSOR SET
2150

FIG. 30

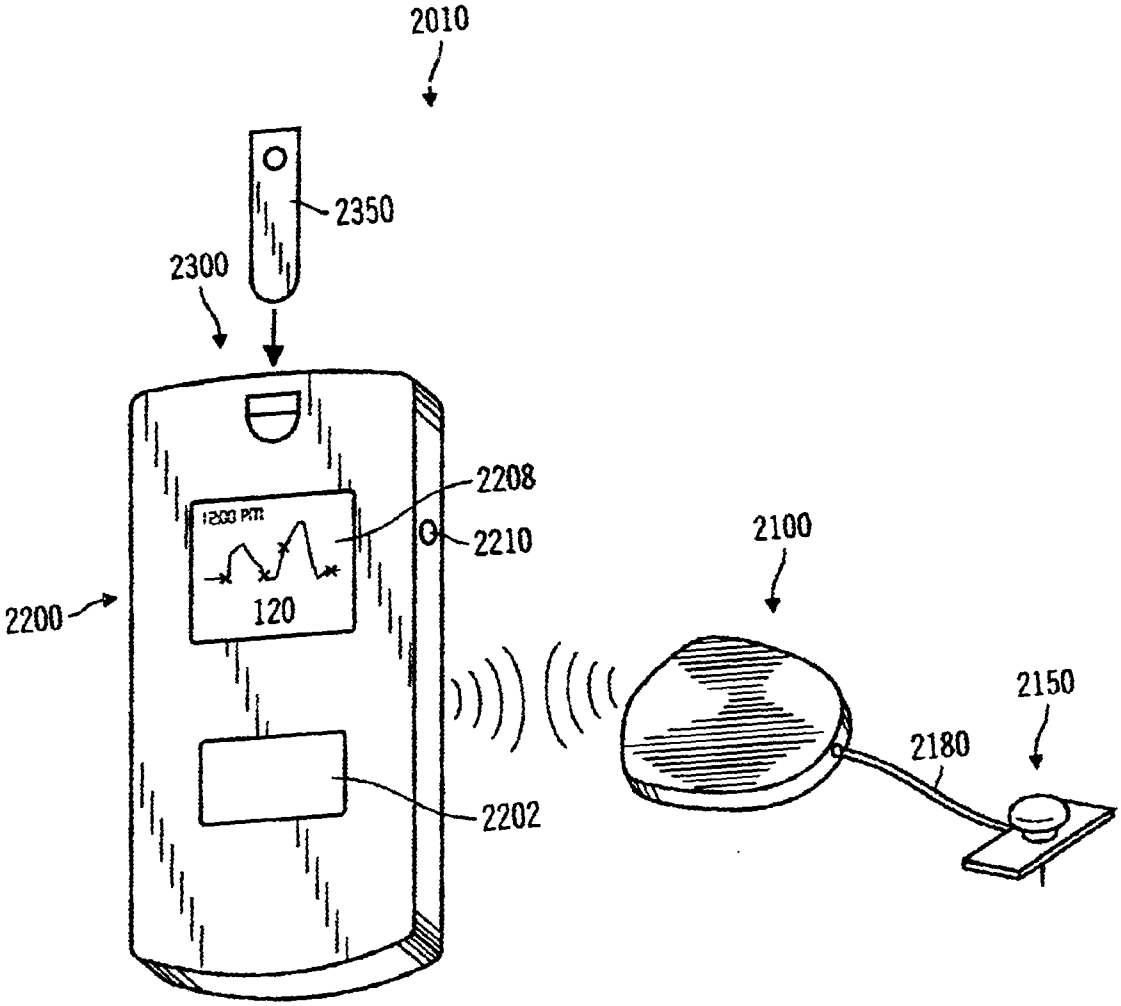

FIG. 31

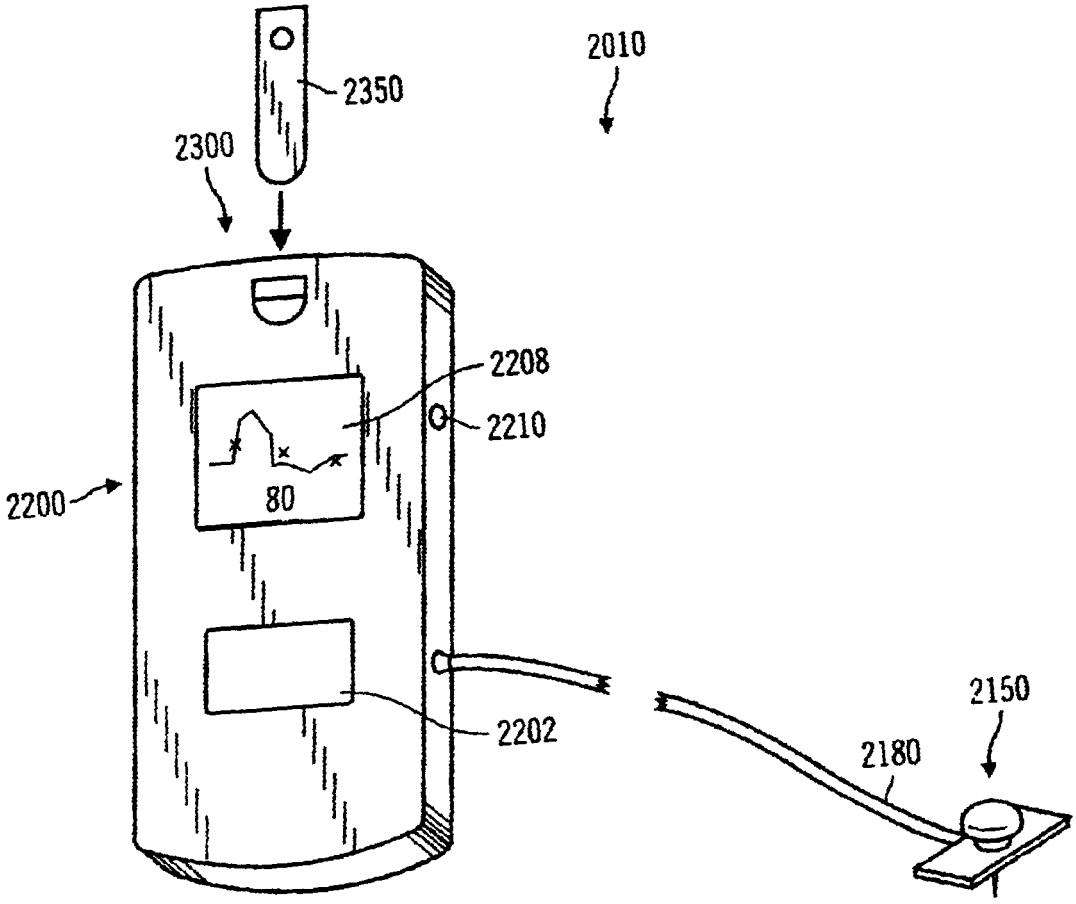

FIG. 32

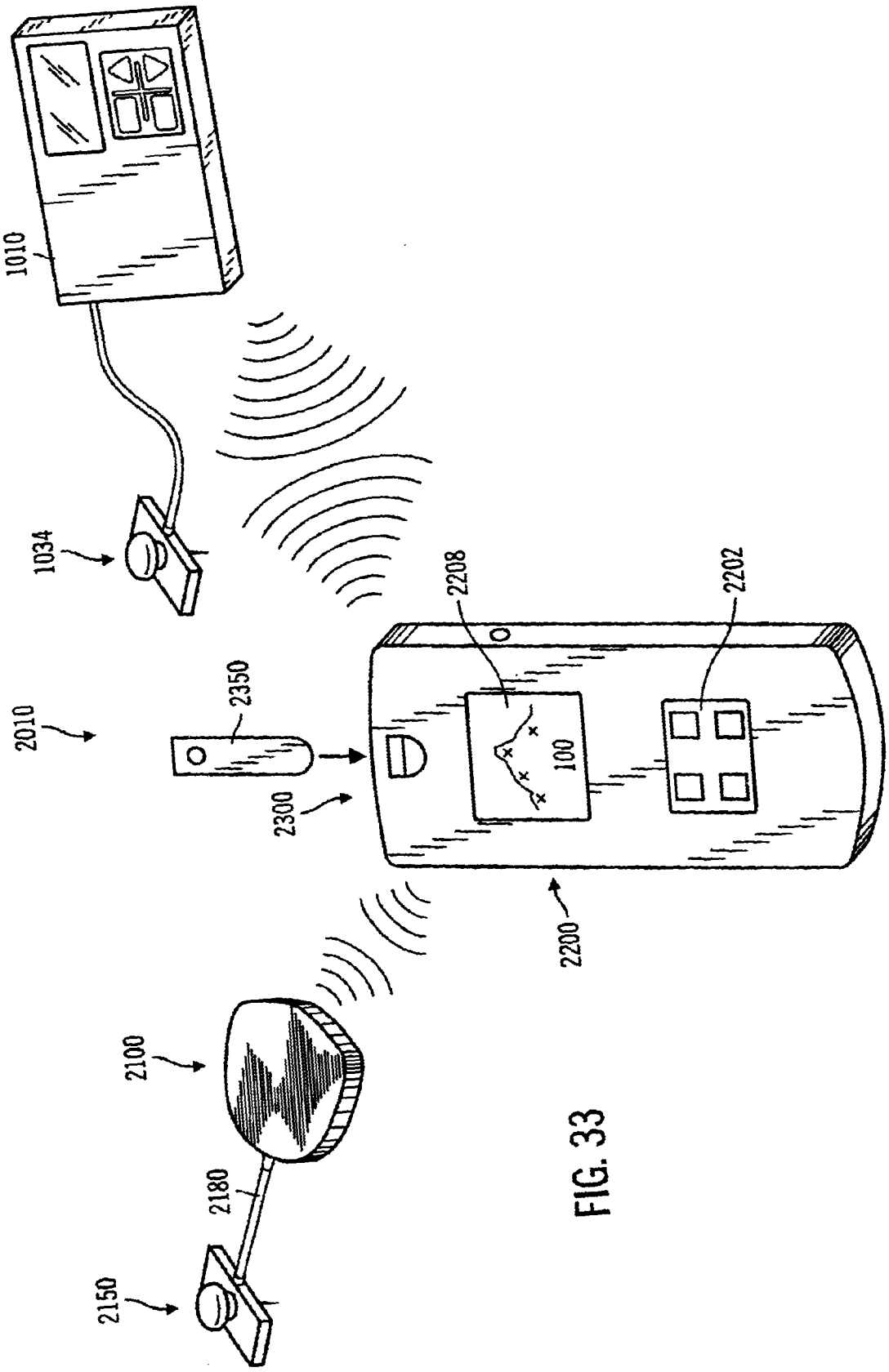

FIG. 33

HANDHELD PERSONAL DATA ASSISTANT (PDA) WITH A MEDICAL DEVICE AND METHOD OF USING THE SAME

RELATED APPLICATIONS

This is a continuation of U.S. patent application Ser. No. 09/487,423 filed Jan. 20, 2000, which is a continuation of U.S. patent application Ser. No. 09/334,858 filed Jun. 16, 1999 that claims priority on U.S. Provisional Application Ser. No. 60/096,994 filed Aug. 18, 1998, a continuation of U.S. patent application Ser. No. 09/377,472 filed Aug. 19, 1999 that claims priority on U.S. Provisional Application Ser. No. 60/103,812 filed Oct. 8, 1998, a continuation of U.S. patent application Ser. No. 09/334,996 filed Jun. 17, 1999, and a continuation of U.S. patent application Ser. No. 09/246,661 filed Feb. 5, 1999—now U.S. Pat. No 6,248,067, all of which are herein specifically incorporated by reference in their entirety.

FIELD OF THE INVENTION

This invention relates to remote programmers and/or handheld personal data assistants (PDA) for use with medical devices and, in particular embodiments, to a PDA that includes a medical device to facilitate testing and monitoring of a patient's condition with coordination of data management and programming through the PDA.

BACKGROUND OF THE INVENTION

Over the years, bodily characteristics have been determined by obtaining a sample of bodily fluid. For example, diabetics often test for blood glucose levels with a blood glucose meter. Traditional blood glucose determinations have utilized a painful finger stick using a lancet to withdraw a small blood sample that is used by the blood glucose meter. This results in discomfort from the lancet as it contacts nerves in the subcutaneous tissue. To obtain a measure of control or information on a diabetic's condition, several finger sticks and tests are required each day (8 or more such tests a day are not uncommon). The pain of lancing and the cumulative discomfort from multiple needle sticks is a strong reason why patients fail to comply with a medical testing regimen used to determine a change in characteristic over a period of time. In addition, these blood glucose meters are only designed to provide data at discrete points, and even with multiple tests a day, do not provide continuous data to show the variations in the characteristic between testing times.

A variety of implantable electrochemical sensors for use with monitors have been developed for detecting and/or quantifying specific agents or compositions in a patient's blood. For instance, glucose sensors have been developed for use in obtaining an indication of blood glucose levels in a diabetic patient. Such readings are useful in monitoring and/or adjusting a treatment regimen which typically includes the regular administration of insulin to the patient. Thus, blood glucose readings from the monitor improve medical therapies with semi-automated medication infusion pumps of the external type, as generally described in U.S. Pat. Nos. 4,562,751; 4,678,408; and 4,685,903; or automated implantable medication infusion pumps, as generally described in U.S. Pat. No. 4,573,994, which are herein incorporated by reference. Typical thin film sensors are described in commonly assigned U.S. Pat. Nos. 5,390,671; 5,391,250; 5,482,473; and 5,586,553 which are incorporated by reference herein. See also U.S. Pat. No. 5,299,571. However, the monitors and electrochemical sensors often

require calibration using readings obtained from blood glucose meters to augment and adjust for drift over time. Thus, although the monitors and electrochemical sensors provide more accurate trend information, a separate blood glucose meter is still often required.

A user must often carry multiple devices to test different aspects of the same value or characteristic. For instance, the a user would need a blood glucose meter and blood glucose monitor. In addition, individuals are also carrying other electronic devices, such as an infusion device, cellular telephones, personal entertainment systems (such as radios, cassette players, CD players, or the like). They may also include small personal computers, personal data assistants (PDAs) or the like. Thus, users often carry a large number of separate electronic devices, which can be cumbersome and inconvenient to handle.

SUMMARY OF THE DISCLOSURE

It is an object of an embodiment of the present invention to provide an improved remote programmer and/or personal data assistant (PDA) that includes a characteristic monitor and/or a characteristic meter, which obviates for practical purposes, the above mentioned limitations.

According to an embodiment of the present invention a remote programmer for interfacing with at least one medical device includes at least one medical device module, at least one processor, a housing, at least one input/output port, at least one display, at least one button, at least one audio indication device and at least one portable power supply. The at least one medical device module is operatively coupled with the remote programmer and includes at least one medical device interface to interface with the at least one medical device. The at least one processor is to interface with the remote programmer and is coupled to the at least one medical device interface to process data from the at least one medical device. The housing is adapted to contain the medical device module and the at least one processor. The at least one input/output port is for communicating with the at least one medical device. The at least one display includes at least one touch screen element to interface with the at least one of the at least one processor and the at least one medical device. The at least one button is to interface with at least one of the at least one processor and the at least one medical device, and the at least one audio indication device is coupled to the at least one processor to provide an audio indication. The at least one portable power supply is contained within the housing of the remote programmer to provide power to at least one of the at least one processor and the at least one medical device. In still further embodiments, the at least one medical device is an infusion device, a characteristic monitor, a characteristic meter, an analyte sensor patch and/or more than one medical device. In other embodiments, the remote programmer is personal data assistant (PDA).

In particular embodiments, the at least one medical device module has a separate housing that is adapted to couple with the housing of the remote programmer. In other embodiments, the at least one medical device is a characteristic sensor that produces a signal indicative of a characteristic of a user, and further includes a second characteristic determining device. The second characteristic determining device is within the housing for receiving and testing an analyte to determine the quantity of the analyte independently of the at least one characteristic sensor. The at least one medical device interface is a sensor receiver to receive sensor data signals produced from the at least one charac-

teristic sensor, and the at least one processor is coupled to the sensor receiver and the second characteristic determining device to process the determined quantity of the analyte from the second characteristic determining device and the sensor data signals from the at least one characteristic sensor. In further embodiments, the at least one characteristic sensor is remotely located from the at least one medical device module, and the sensor receiver receives the sensor data signals as wireless signals from the remotely located at least one characteristic sensor.

In other embodiments, the remote programmer further includes a transmitter coupled to the at least one processor and the input/output port for transmitting the processed sensor data signals to another data receiving device. In additional embodiments, the at least one medical device module uses the display of the remote programmer to show the determined quantity of the analyte from the second characteristic determining device and the processed sensor data signals from the at least one characteristic sensor. Also, the at least one processor monitors the sensor data signals from the sensor receiver to determine when the second characteristic determining device is to be used to perform calibration of the sensor data signals. In yet other embodiments, the remote programmer further includes at least one memory to store the determined quantity of the analyte from the second characteristic determining device and the processed sensor data signals from the at least one characteristic sensor. In particular embodiments, the sensor data signals are received by the sensor receiver continuously, near continuously or intermittently. In other embodiments, the second characteristic determining device is a second medical device module that utilizes a second characteristic sensor. In these embodiments, the determined quantity of the analyte from the second characteristic determining device is determined continuously, near continuously or intermittently.

In further embodiments of the present invention, the second medical device module and the second characteristic sensor use a different sensing technology from that used by the at least one medical device module and the characteristic sensor. In addition, the second characteristic determining device utilizes a discrete sample to determine the quantity of the analyte. Also, the second characteristic determining device may utilize a test strip to analyze the sample to determine the quantity of the analyte.

In yet further embodiments, the remote programmer further includes a transmitter coupled to the at least one processor and the input/output port. The the at least one processor further includes the ability to program other medical devices, and the transmitter transmits a program to the other medical devices. In particular embodiments, the transmitter transmits through a relay device between the transmitter and a remotely located processing device. In some embodiments, the relay device increases a maximum distance by amplifying the processed sensor data signals from the transmitter to be received by the remotely located processing device. In other embodiments, the relay device enables the remotely located processing device to be located in a different room than the transmitter. While in other embodiments, the relay device includes a telecommunications device, and when the transmitter generates an alarm the telecommunications device transmits the alarm to a remotely located receiving station. Further embodiments of the remote programmer include a data receiver, and the data receiver receives program instructions from other processing devices.

In additional embodiments, a medical device module for use in a system with the at least one medical device and the remote programmer includes a module housing, the at least one medical device interface and at least one module processor. The module housing is adapted to couple with the housing of the remote programmer. The at least one medical device interface is coupled to the module housing for interfacing with the at least one medical device. The at least one module processor is coupled to the at least one medical device interface to process data from the at least one medical device, and wherein the at least one module processor is capable of interfacing with the at least one processor of the remote programmer.

In more embodiments, the at least one medical device is a characteristic sensor that produces a signal indicative of a characteristic of a user, and the medical device module further includes a second characteristic determining device. The second characteristic determining device is within the housing for receiving and testing an analyte to determine the quantity of the analyte independently of the at least one characteristic sensor. The the at least one medical device interface is a sensor receiver to receive sensor data signals produced from the at least one characteristic sensor, and the at least one module processor is coupled to the sensor receiver and the second characteristic determining device to process the determined quantity of the analyte from the second characteristic determining device and the sensor data signals from the at least one characteristic sensor.

According to a further embodiment of the present invention, a medical device module for use in a system with a personal data assistant (PDA) with at least one medical device includes a housing, at least one medical device and a processor. The housing is adapted to couple with the PDA. The at least one medical device interface is coupled to the housing for interfacing with the at least one medical device. The processor is coupled to the at least one medical device interface to process data from the at least one medical device. The processor is also capable of interfacing with the PDA.

In preferred embodiments, the at least one medical device is a characteristic sensor that produces a signal indicative of a characteristic of a user, and the medical device module further includes a second characteristic determining device within the housing for receiving and testing an analyte to determine the quantity of the analyte independently of the at least one characteristic sensor. The at least one medical device interface is a sensor receiver to receive sensor data signals produced from the at least one characteristic sensor. The processor is coupled to the sensor receiver and the second characteristic determining device to process the determined quantity of the analyte from the second characteristic determining device and the sensor data signals from the at least one characteristic sensor.

In particular embodiments, the at least one characteristic sensor is remotely located from the medical device module, and the sensor receiver receives the sensor data signals as wireless signals from the remotely located at least one characteristic sensor. In other embodiments, the medical device module further includes a transmitter coupled to the processor for transmitting the processed sensor data signals to another data receiving device. In additional embodiments, the medical device module uses a display of the PDA to show the determined quantity of the analyte from the second characteristic determining device and the processed sensor data signals from the at least one characteristic sensor. In further embodiments, the processor monitors the sensor data signals from the sensor receiver to determine when the second characteristic determining device is to be used to perform calibration of the sensor data signals.

In other embodiments, the medical device module further includes a memory to store the determined quantity of the analyte from the second characteristic determining device and the processed sensor data signals from the at least one characteristic sensor. In still other embodiments, the sensor data signals are received by the sensor receiver continuously, near continuously or intermittently.

In yet another embodiments, the second characteristic determining device is a second medical device module that utilizes a second characteristic sensor. In these embodiments, the determined quantity of the analyte from the second characteristic determining device is determined continuously, near continuously or intermittently. In a further embodiment, the second medical device module and the second characteristic sensor use a different sensing technology from that used by the at least one medical device module and the characteristic sensor.

In still yet another embodiment of the present invention, the second characteristic determining device utilizes a discrete sample to determine the quantity of the analyte. In further embodiments, the second characteristic determining device utilizes a test strip to analyze the sample to determine the quantity of the analyte. In still further embodiments, the at least one medical device is an infusion device, an analyte sensor patch and/or more than one medical device.

Still other preferred embodiments of the present invention are directed to a personal data assistant (PDA) for interfacing with at least one medical devices described above. In these embodiments, the medical device module operatively couples with the PDA and the PDA includes a housing adapted to receive the medical device module.

Further preferred embodiments of the present invention are directed to a medical device module for use in a system with a personal data assistant (PDA) with at least one characteristic sensor that produces a signal indicative of a characteristic of a user. The medical device module includes a housing, a test strip receptacle, a sensor receiver and a processor. The housing is adapted to operatively couple with the PDA. The test strip receptacle for receiving and testing a test strip exposed to an analyte to determine the quantity of the analyte. The sensor receiver is for receiving sensor data signals produced from the at least one characteristic sensor. The processor is coupled to the sensor receiver and the test strip receptacle to process the determined quantity of the analyte from the test strip receptacle and the sensor data signals from the at least one characteristic sensor, and the processor is capable of interfacing with the PDA.

In particular embodiments, the at least one characteristic sensor is remotely located from the medical device module, and wherein the sensor receiver receives the sensor data signals as wireless signals from the remotely located at least one characteristic sensor. In other embodiments, the medical device module further includes a transmitter coupled to the processor for transmitting the processed sensor data signals to another data receiving device. Preferably, the transmitter transmits the processed sensor signals by radio frequencies. In additional embodiments, the transmitter transmits through a relay device between the transmitter and a remotely located processing device. Preferably, the relay device increases a maximum distance by amplifying the processed sensor data signals from the transmitter to be received by the remotely located processing device. Alternatively, the relay device enables the remotely located processing device to be located in a different room than the transmitter. In other alternative embodiments, the relay device includes a telecommunications device, and when the transmitter generates an alarm the telecommunications device transmits the alarm to a remotely located receiving station.

In further embodiments, the processor of the medical device module further includes the ability to program other medical devices, and wherein the transmitter transmits a program to the other medical devices. In still other embodiments, the medical device module further includes a data receiver, and the data receiver receives program instructions from other processing devices.

In yet another embodiment, the medical device module uses a display on the PDA to show the determined quantity of the analyte from the test strip receptacle and the processed sensor data signals from the at least one characteristic sensor. In still other embodiments, the processor of the medical device module the sensor data signals from the sensor receiver to determine when the test receptacle is to be used to perform calibration of the sensor data signals.

Additional embodiments of the medical device module further include a memory to store the determined quantity of the analyte from the test strip receptacle and the processed sensor data signals from the at least one characteristic sensor. In particular embodiments, the sensor data signals are received by the sensor receiver continuously, near continuously or intermittently.

Other features and advantages of the invention will become apparent from the following detailed description, taken in conjunction with the accompanying drawings which illustrate, by way of example, various features of embodiments of the invention.

BRIEF DESCRIPTION OF THE DRAWINGS

A detailed description of embodiments of the invention will be made with reference to the accompanying drawings, wherein like numerals designate corresponding parts in the several figures.

FIG. **1** is a perspective view of a system using a handheld data assistant (PDA) and computer in accordance with an embodiment of the present invention.

FIG. **2** is a perspective view of a PDA with a medical device module in accordance with an embodiment of the present invention.

FIG. **3** is a bottom plan view of the PDA and medical device shown in FIG. **2**.

FIG. **4** is a perspective view of the PDA including a medical device module that includes a characteristic monitor and characteristic meter and that interfaces with a telemetered characteristic monitor transmitter in accordance with a first embodiment of the present invention.

FIG. **5** is a block diagram of the medical device module that includes the characteristic monitor and the characteristic meter shown in FIG. **4**.

FIG. **6** is a perspective view of the medical device module that includes the characteristic meter and characteristic monitor that interfaces with a telemetered characteristic monitor transmitter in accordance with the embodiment of FIGS. **4** and **5**.

FIG. **7** is a perspective view of a PDA including a medical device module that includes a characteristic meter, characteristic monitor that interfaces with a telemetered characteristic monitor transmitter, and an infusion device in accordance with a second embodiment of the present invention.

FIG. **8** is a perspective view of the medical device module that includes the characteristic meter and characteristic monitor that interfaces with a telemetered characteristic monitor transmitter and interfaces with the infusion device in accordance with the embodiment of FIG. **7**.

FIG. **9** is a simplified block diagram of a telemetered characteristic monitor transmitter and medical device module in accordance with a third embodiment of the present invention.

FIG. **10** is a simplified block diagram of a telemetered characteristic monitor transmitter and medical device module system in accordance with a fourth embodiment of the present invention.

FIG. **11** is a perspective view of a medical device module that interfaces with a telemetered characteristic monitor transmitter in accordance with a fifth embodiment of the present invention.

FIG. **12** is a perspective view of a medical device module that interfaces with a characteristic meter in accordance with a sixth embodiment of the present invention.

FIG. **13** is a perspective view of a medical device module that interfaces with an infusion device, telemetered characteristic monitor transmitter and a characteristic meter in accordance with a seventh embodiment of the present invention.

FIG. **14** is a perspective view of a medical device module that includes a characteristic meter and interfaces with an infusion device in accordance with an eighth embodiment of the present invention.

FIG. **15** is a perspective view of a medical device module that includes a characteristic meter in accordance with a ninth embodiment of the present invention.

FIG. **16** is a perspective view of a medical device module that interfaces with an infusion device in accordance with a tenth embodiment of the present invention.

FIG. **17** is a perspective view of a medical device module that interfaces with an implantable medical device in accordance with a tenth embodiment of the present invention.

FIG. **18** is a perspective view of a medical device module that includes a input jack for a wired connection with a medical device in accordance with an eleventh embodiment of the present invention.

FIG. **19** is a perspective view of a medical device module that interfaces with an implantable analyte sensing patch in accordance with a twelfth embodiment of the present invention.

FIG. **20** is a perspective view of a medical device module that includes contacts for interfacing with a medical device in accordance with a thirteenth embodiment of the present invention.

FIG. **21** is a simplified block diagram of an external infusion device and system in accordance with an embodiment of the present invention.

FIG. **22** is a perspective view of an external infusion device and system in accordance with an embodiment of the present invention.

FIG. **23** is a top perspective view of an RF programmer in accordance with an embodiment of the present invention.

FIG. **24** is a top perspective view of a remote commander in accordance with another embodiment of the present invention.

FIG. **25** is a simplified diagram of an external infusion device and system in accordance with another embodiment of the present invention.

FIG. **26** is a simplified block diagram of an external infusion device and system in accordance with still another embodiment of the present invention.

FIG. **27** is a simplified block diagram of an external infusion device and system in accordance with yet another embodiment of the present invention.

FIG. **28** is a simplified block diagram of a telemetered characteristic monitor transmitter and characteristic monitor in accordance with another embodiment of the present invention.

FIG. **29** is a simplified block diagram of a telemetered characteristic monitor transmitter and characteristic monitor system in accordance with still another embodiment of the present invention.

FIG. **30** is a simplified block diagram of a characteristic monitor with a characteristic meter in accordance with a first embodiment of the present invention.

FIG. **31** is a perspective view of a characteristic monitor with a characteristic meter in accordance with a first embodiment of the present invention.

FIG. **32** is a perspective view of a characteristic monitor with a characteristic meter in accordance with a second embodiment of the present invention.

FIG. **33** is a perspective view of a characteristic monitor with a characteristic meter for use with a telemetered glucose sensor and an infusion pump in accordance with a third embodiment of the present invention.

DETAILED DESCRIPTION OF THE PREFERRED EMBODIMENTS

As shown in the drawings for purposes of illustration, the invention is embodied in a remote programmer and/or a handheld personal data assistant (PDA) that includes a medical device module for interfacing with a medical device. In preferred embodiments, medical device module interfaces with a characteristic monitor that obtains data from a telemetered characteristic monitor transmitter connected to a sensor set that determines body characteristics on a continuous, near continuous or intermittent basis. In further embodiments of the present invention, the medical device module interfaces with a characteristic meter for obtaining discrete measurements. In particular embodiments, the measurements received from the characteristic meter can be utilized by a characteristic monitor for calibration and/or data analysis and verification. In preferred embodiments, the characteristic monitor interfaces with a telemetered characteristic monitor transmitter that uses a sensor set and is for determining glucose levels in the blood and/or bodily fluids of the user. Preferably, the characteristic meter is primarily adapted for use with test strips that use a blood sample to determine glucose levels. However, other embodiments of the characteristic meter may use other testing structures, such as liquid samples placed in a receptacle, or the like, or test strips that use samples from other fluids, such as interstitial fluid, spinal fluid, saliva, urine, tears, sweat, or the like. However, it will be recognized that further embodiments of the invention may be used to interface with other telemetered characteristic monitors transmitters and/or meters to determine the levels of other agents, characteristics or compositions, such as hormones, cholesterol, medication concentrations, viral loads (e.g., HIV), or the like. In preferred embodiments, the characteristic monitor and sensor are primarily adapted for use with subcutaneous human tissue. However, still further embodiments may be placed in other types of tissue, such as muscle, lymph, organ tissue, veins, arteries or the like, and used in animal tissue. Other embodiments of the present invention may interface with other medical devices, such as pacemakers, implanted analyte sensor patches, infusion devices, telemetry devices, or the like.

As illustrated in FIG. **21**, preferred embodiments of the infusion device **1010** include a remote RF programmer

1012, a carbohydrate (or bolus) calculator 1014 and/or a vibration alarm 1016. The RF programmer 1012 and carbohydrate calculator 1014 communicate with a processor 1018 contained in a housing 1020 of the infusion device 1010. The processor 1018 is used to run programs and control the infusion device 1010, and is connected to an internal memory device 1022 that stores programs, history data, user defined information and parameters. In preferred embodiments, the memory device is a ROM and DRAM; however, in alternative embodiments, the memory device 1022 may include other memory storage devices such as RAM, EPROM, dynamic storage such as flash memory, energy efficient hard-drive, or the like. In preferred embodiments, the infusion device 1010 is an external infusion pump that is programmed through a keypad 1024 (including keys 1108, 1110, 1112 and 1114) on the housing 1020 or by commands received from the RF programmer 1012 through a transmitter/receiver 1026. Feedback to the infusion device 1010 on status or programming changes are displayed on an LCD 1028 and/or audibly through a speaker 1030. In alternative embodiments, the keypad 1024 may be omitted and the LCD 1028 may be used as a touch screen input device or the keypad 1024 may utilize more keys or different key arrangements then those illustrated in the figures. The processor 1018 is also coupled to a drive mechanism 1032 that is connected to a fluid reservoir containing fluid that is expelled through an outlet 1036 in the reservoir 1032 and housing 1020, and then into a body of a user through tubing and a set 1038. In further alternative embodiments, the keypad 1024, LCD 1020, speaker 1024 may be omitted and the infusion device is implanted in a body of the user, and all programming and data transfer is handled through the RF programmer 1012.

Several programming options will be available in the infusion device 1010, and will include up to three customized basal profiles, a carbohydrate (or bolus) calculator and an alarm clock, as well as remote and on-device programming. Additionally, a physician/educator will be able to configure the infusion device 1010 through a Communications Station 1008 to provide or restrict access to certain programming options. Particular embodiments of the infusion device 1010 will also download stored information through the Communication-Station. Further description of a Communication Station of this general type is be found in U.S. Pat. No. 5,376,070 to Purvis et al., entitled DATA TRANSFER SYSTEM FOR AN INFUSION PUMP, which is herein incorporated by reference. This information can be used alone or combined with information from a Glucose Meter and/or a Glucose Sensor to assist the user and/or the health care professional in making intelligent therapy decisions. Moreover, the information, programs and data may be downloaded to a remote or local PC, laptop, station, or the like, for analysis and review by a MiniMed or a trained health care professional through the transmitter/receiver 1026. The data may also be downloaded through a Communication-Station 1008 to a remotely located computer 1006 such as a PC, lap top, or the like, over communication lines, by modem or wireless connection, as shown in FIG. 25.

The remote RF programmer 1012 (or remote commander) will enable the user to perform basic external infusion device 1010 programming steps without accessing the keyboard 1024 on the external infusion device 1010 or looking at the LCD (Liquid Crystal Display) 1028 screen. This will benefit visually impaired users of the external infusion device 1010, since the remote RF programmer 1012 will give them ready access to the most commonly used operations of the external infusion device 1010, and will obviate the need for visual feedback. Of particular importance to the sight impaired will be the auditory feedback (and/or vibration feedback as discussed below) that the external infusion device 1010 will provide. The instructions from the RF programmer 1012 will be confirmed by a series of audible beeps (or if requested by programming, vibration) from the external infusion device 1010. In alternative embodiments, the RF programmer 1012 may include a receiver and provide an audio (or vibration) indication that the commands have been received and acknowledged by the external infusion device 1010. In further embodiments, the keypad 1102 on the remote RF programmer 1012 will have the letters defining the capability of the key encoded in Braille, and the ridges that orient the user to the keypad 1102 will be quite pronounced to assist in guiding the user to the proper function key. Other embodiments may utilize keys that have different sizes or shapes to further enhance the ability for users to identify the correct buttons to activate the various features and functions.

A remote RF programmer 1012 will provide convenience and discretion for the user of the external infusion device 1010 by allowing concealment of the external infusion device 1010 under clothes, in pouches, or the like. Preferably, the RF programmer 1012 is an optional accessory item on the external infusion device 1010, and the external infusion device 1010 will be fully functional without the use of the RF programmer 1012. However, in alternative embodiments, the keypad 1024 in the external infusion device 1010 may be omitted and all programming would be handled by a local or remote PC, laptop, Communication-Station, RF programmer or the like. In preferred embodiments, the RF programmer 1012 will also provide the user with the ability to perform the following functions: deliver a bolus, suspend/restart the external infusion device, and set and cancel a temporary basal rate. However, in alternative embodiments, the RF programmer may include still additional capabilities such as data transfer (e.g., external infusion device history data or data from other medical devices), updates to software and programming, or the like. In preferred embodiments, the data transfer capabilities between the RF programmer 1012 and the transmitter/receiver 1026 of the external infusion device 1010 are two-way. In alternative embodiments, the data transfer from the RF programmer 1012 to the external infusion device 1010 is one-way, such that the RF programmer 1012 does not receive transmissions from the external infusion device 1010. In further embodiments, the RF programmer acts as a relay, or shuttle, for data transmission between the external infusion device 1010 and a PC, laptop, Communication-station, or the like.

In addition, as shown in FIG. 26, a relay or repeater 1004 may be used with an external infusion device 1010 and an RF programmer 1012 to increase the distance from which the RF programmer 1012 can be used with the external infusion device 1010. For example, the relay could be used to provide information to parents of children using the external infusion device 1010 and allow them to program the external infusion device 1010 from a distance with the RF programmer 1012. The information could be used when children are in another room during sleep or doing activities in a location remote from the parents. In further embodiments, the relay 1004 can include the capability to sound an alarm. In addition, the relay 1004 may be capable of providing external infusion device 1010 information to a remotely located individual via a modem connected to the relay 1004 for display on a monitor, pager or the like. In a

still further embodiment of the present invention, the external infusion device **1010** is capable of being programmed by multiple RF programmers **1012**, as shown in FIG. **27**. For instance, each RF programmer **1012** would learn (or be programmed with) the unique code (discussed below) of the external infusion device **1010**. This would be useful for users that desired to have multiple RF programmers **1012**, such as at home, office and/or school or needed a replacement for an RF programmer that was lost.

In preferred embodiments, the RF programmer **1012** is similar in appearance to the type of remote that is used to lock and unlock car doors. It will have four (4) keys on a keypad **1102** on a housing **1104**, which will be laid out in a square grid pattern, similar in appearance and layout to the keypad **1024** on the infusion device **1010**, as shown in FIGS. **22** and **23**. In alternative embodiments, fewer keys may be used to simplify the RF programmer, reduce manufacturing costs and/or to reduce the number of program capabilities available. Preferably, the RF programmer **1012** should include a ring **1106** that fits on a key ring to lessen the likelihood that it is lost. It should also have a "quick release" feature to allow the user to disconnect it from the key ring.

Preferred embodiments utilize RF frequencies; however, alternative embodiments, may use optical, infrared (IR), ultrasonic frequencies, magnetic effects, or the like, to communicate with the external infusion device **1010**.

Alternative embodiments of the RF programmer (controller or commander) **1012'**, as shown in FIG. **24**, may have more complex keypad arrangements **1152**, and may include a display device **1150**, such as an LCD, LED, plasma screen, or the like, to assist in programming the external infusion device **1010**. Further alternatives may include a microphone (not shown) and related circuitry to allow voice activated control of the external infusion device. In further alternative embodiments, the RF programmer **1012'** may be formed in larger sizes, comparable to a TV controller or a pocket calculator, and may include a display to facilitate more complicated or easier programming. Still further embodiments, may include the ability to receive data and information from the external infusion device **1010** and/or a glucose monitoring device, and the ability to relay the information to another medical device, external infusion device **1010**, glucose monitor device, PC, laptop, Communication-Station, or the like. Data transmission may be to other devices or include the capability to receive data or instructions. An RF activation capability may be included in addition to the programming capability.

In preferred embodiments, the external infusion device **1010** includes a receiver to receive the commands from the RF programmer **1012**. Normally, the receiver is in a standby mode (e.g., not receiving) and becomes active for short periods every 2.5 seconds (approximately) to see if there is any RF activity from the RF programmer **1012**. In alternative embodiments, the receiver of the external infusion device **1010** may be on continuously or may become active more often or less often, with the selection being dependent on power capacity, expected frequency of use of the RF programmer **1012**, or the like. Generally, the receiver of the external infusion device **1010** requires that the RF programmer send an activating message for a period lasting about 5 seconds for the RF programmer to be recognized by the receiver. In alternative embodiments, longer or shorter periods of time for sending the activating message may be used.

Once the receiver recognizes that there is a valid RF programmer **1012** sending a message to the external infusion device **1010** (i.e., with this device **1010**'s unique code), the receiver will remain in an active mode until a complete sequence of commands has been received, or until the receiver times out due to a lack of RF communications from the RF programmer **1012**. Preferably, upon recognition of a valid RF programmer **1012** trying to communicate with the receiver, the external infusion device **1010** will activate its audio beeper (or its vibrator or the like) to let the user know that the external infusion device **1010** has been activated by the RF programmer **1012**. Typically, the receiver of the infusion device **1010** expects to receive a message with a valid preamble and message type, a recognized unique code, a valid function code (e.g., activate, bolus, suspend, or the like), an appropriate message count used by the receiver for reduction of RF interference problems, and a valid CRC on the transmitted message to ensure message integrity. Alternative embodiments, may include different message contents or components.

In operation, as discussed above, the RF programmer **1012** may be used to program several capabilities, such as an audio (or vibration) bolus, a suspension of external infusion device operation, a temporary basal rate, an extended bolus (such as square wave, ramp, triangular or the like) or dual wave bolus. In addition, the user may program a profiled bolus that uniquely matches the needs of the individual user (for instance it may contain square, ramp, pulse or curved portions that make up the profile to be delivered over a period of time). It should be noted that the capabilities may also be directly programmed on the external infusion device **1010** using the same sequence on the keypad of the external infusion device **1010**.

The RF programmer **1012'**, since it includes a display **1150** may use the same programming protocol and key sequences as those used to program the external infusion device **1010** using the keypad **1024** and LCD **1028** on the external infusion device **1010**. Alternatively, the RF programmer **1012'** may use more sophisticated programming techniques, such as single key programming, if the display **1150** includes the capability to use touch screen techniques, or may use additional keys in the keypad **1152** that are specifically identified with particular programming features on the external infusion device **1010**.

The Bolus estimator **1014** (or carbohydrate estimator that estimates a bolus based on carbohydrate consumption (CHO)) assists the user with carbohydrate counting and in determining precise dosing adjustments to account for meals. Carbohydrates are the primary, but not the only, factor affecting blood glucose levels. Generally, it is sufficient to account just for the carbohydrates. It also encourages the user to enter current blood glucose values before using this feature, which will also be viewed quite favorably by the health care professional, since it increases compliance with the medical regimen and improves control. In alternative embodiments, the bolus estimator **1014** in the external infusion device **1010** can be connected or coupled to a glucose monitor by way of the RF programmer **1012** (or other data transfer) to provide direct input to the bolus estimator **1014**. In still further embodiments, the external infusion device **1010** may utilize a more complicated keypad and/or RF programmer **1012**, and a code is assigned for each food. Then the code for each food to be consumed is entered into the external infusion device **1010**. An example of Bolus Estimators can be found in U.S. Patent Application Ser. No. 60/096,994 filed Aug. 18, 1998 and is entitled "INFUSION DEVICE WITH REMOTE PROGRAMMING, CARBOHYDRATE CALCULATOR AND/OR VIBRATION ALARM CAPABILITIES," or U.S. patent application Ser. No. 09/334,858 filed Jun. 17,1999 and is entitled "EXTER-

NAL INFUSION DEVICE WITH REMOTE PROGRAMMING, BOLUS ESTIMATOR AND/OR VIBRATION ALARM CAPABILITIES," both of which are herein incorporated by reference.

Further embodiments of the present invention include a vibration alarm **1016** that provides a noticeable vibration in addition to or in lieu of an audible alarm. The resulting tactile sensation of the vibration make the alarms more noticeable during sleep, when not thinking clearly due to various conditions, or the like, to improve the likelihood that the user will respond to an alarm. Thus, a vibration alarm **1016** can improve safety and control. In addition, the vibration alarm **1016** may be less publicly noticeable, and thus more useable in quiet settings, such as libraries, lectures, shows, or the like, or in loud settings where the alarm might go unnoticed, such as parties, concerts, or the like. In further embodiments, the RF programmer **1012** may include a vibration alarm (not shown) that can deliver a vibration alarm to the user in addition to, or instead of, the vibration alarm **1016** from the external infusion device **1010**. Alternatively, the RF programmer **1012** may provide a vibration alarm and the external infusion device **1010** may provide an audible alarm or vice versa. In preferred embodiments, all alarms will gradually escalate in frequency or volume so that the user can terminate them as soon as they are noticed. In alternative embodiments, the alarms may change tones or intermittently stop to draw attention to the alarm condition. In further alternatives, the infusion device **1010** may use the transmitter/receiver **1026** to transmit the alarm to a remotely located device, such as a communication-station, modem or the like to summon help.

In addition, as shown in FIG. **29**, a relay **2004** may be capable of providing sensor set **2150** and telemetered characteristic monitor transmitter **2100** data to a remotely located individual via a modem connected to the relay **2004** for display on a monitor, pager or the like. The data may also be downloaded through a Communication-Station **2008** to a remotely located computer **2006** such as a PC, lap top, or the like, over communication lines, by modem or wireless connection, as shown in FIG. **29**. Also, some embodiments may omit the Communication Station **2008** and uses a direct modem or wireless connection to the computer **2006**. In further embodiments, the telemetered characteristic monitor transmitter **2100** transmits to an RF programmer, which acts as a relay, or shuttle, for data transmission between the sensor set **2150** and a PC, laptop, Communication-station, station, or the like. The telemetered characteristic monitor transmitter **2100** and characteristic monitor **2200** may also be combined with other medical devices to combine other patient data through a common data network and telemetry system.

As shown in FIGS. **30–33**, a characteristic monitor **2200** may include a display **2208** that is used to display the results of the measurement received from the sensor in the sensor set **2150** via the telemetered characteristic monitor transmitter **2100**. The results and information displayed includes, but is not limited to, trending information of the characteristic (e.g., rate of change of glucose), graphs of historical data, average characteristic levels (e.g., glucose), or the like. Alternative embodiments include the ability to scroll through the data. The display **2208** may also be used with a keypad **2202** on the characteristic monitor to program or update data in the characteristic monitor **2200**. It is noted that the typical user can be expected to have somewhat diminished visual and tactile abilities due to complications from diabetes or other conditions. Thus, the display **2208** and keypad **2202** should be configured and adapted to the needs of a user with diminished visual and tactile abilities. In alternative embodiments, the value can be conveyed to the user by audio signals, such as beeps, speech or the like. Still further embodiments may use a touch screen instead of (or in some cases addition to) keypad **2202** to facilitate water proofing and to ease changes in the characteristic monitor **2200** hardware to accommodate improvements or upgrades.

In further embodiments of the present invention, the characteristic monitor **2200** may be replaced by a different device. For example, in one embodiment, the telemetered characteristic monitor transmitter **2100** communicates with an RF programmer (see FIGS. **1–29**) that is also used to program and obtain data from an infusion pump **1010** or the like. The RF programmer may also be used to update and program the transmitter **2100**, if the transmitter **2100** includes a receiver for remote programming, calibration or data receipt. The RF programmer can be used to store data obtained from the sensor set **2150** and then provide it to either an infusion pump **1010**, characteristic monitor, computer or the like for analysis. In further embodiments, the transmitter **2100** may transmit the data to a medication delivery device, such as an infusion pump or the like, as part of a closed loop system. This would allow the medication delivery device to compare sensor results with medication delivery data and either sound alarms when appropriate or suggest corrections to the medication delivery regimen. In preferred embodiments, the transmitter **2100** would include a transmitter to receive updates or requests for additional sensor data. An example of one type of RF programmer can be found in U.S. Patent application Ser. No. 60/096,994 filed Aug. 18, 1998 and is entitled "INFUSION DEVICE WITH REMOTE PROGRAMMING, CARBOHYDRATE CALCULATOR AND/OR VIBRATION ALARM CAPABILITIES," or U.S. patent application Ser. No. 09/334,858 filed Jun. 17, 1999 and is entitled "EXTERNAL INFUSION DEVICE WITH REMOTE PROGRAMMING, BOLUS ESTIMATOR AND/OR VIBRATION ALARM CAPABILITIES," both of which are herein incorporated by reference.

In further embodiments, the telemetered characteristic monitor transmitter **2100** can include a modem, or the like, to transfer data to and from a healthcare professional. Further embodiments, can receive updated programming or instructions via a modem connection.

As shown in FIGS. **30–33**, in preferred embodiments, the microprocessor **2216** is coupled to a data input and output (I/O) port **2210**, and the user can download the stored information to an external computer (see FIGS. **1**, **10** and **29**), or the like, through the data I/O port **2210** for evaluation, analysis, calibration, or the like. Preferably, the data I/O port **2210** is capable of transferring data in both directions so that updated program instructions or reminder alarms can be set by the user or doctor. In preferred embodiments, the I/O port **2210** uses infrared (IR) technology, such as that shown and described in U.S. Pat. No. 5,376,070 entitled "Data Transfer System for an Infusion Pump", or the like, which is herein incorporated by reference. However, in alternative embodiments, the I/O port **2210** may use other data transfer technologies such as cables, fiber optics, RF, or the like. In still other embodiments, the data I/O port **2210** may include multiple ports to support multiple communication protocols or methods, or may include a universal port capable of transmitting data in several different modes. In preferred embodiments, the stored data may be downloaded to (or new program instructions and data uploaded from) a computer, communication station, or the like. In alternative

embodiments, the stored data may be downloaded to (or new program instructions and data uploaded from) an infusion pump, or the like. In preferred embodiments, the characteristic monitor **2200** is the approximate size of a conventional glucose meter or smaller. However, in alternative embodiments, the characteristic monitor **2200** may be formed in larger sizes, comparable to a TV controller or a pocket calculator, and may include a larger display **2208** to facilitate more complicated or easier programming.

The keypad **2202** provides the user with the capability to store additional information, set the date and the time, or set alarms to indicate when to take the next test with the characteristic meter **2300**. The keypad **2202** is used in conjunction with the display **2208** to access the various modes, alarms, features, or the like, by utilizing methods typically employed to set the parameters on a conventional glucose meter, an infusion pump, or the like. The keypad **2202** may also be used to manipulate the stored data in the characteristic monitor **2200** and display the data on the on-board display **2208**.

The programs for controlling the sensor monitor **2212** of the characteristic monitor **2200** are also stored in the ROM **2204**, and sensor data signal values received by the sensor interface **2214** from the sensor set **2150** are processed by the sensor monitor **2212** and the microprocessor **2216**, and then the results are stored in the RAM **2206**. The sensor monitor **2212** and the sensor interface **2214** can be activated by a wired connection to a sensor set **2150** that draws power from the characteristic monitor, by receipt of a signal from the telemetered characteristic monitor transmitter **2100**, or by the keypad **2202**. Preferred embodiments use a characteristic monitor **2200** (in which the system includes a Potentiostat such as sensor monitor **2212**) to receive the sensor signals from a telemetered characteristic monitor transmitter **2100**, as shown in U.S. Patent Application Serial No. 60/103,812 entitled "Telemetered Characteristic Monitor System and Method of Using the Same", which is herein incorporated by reference. In alternative embodiments, the sensor signals may be received on a more infrequent (or periodic) basis from a Holter-type monitor system, as shown in U.S. patent application Ser. No. 09/246,661 entitled "An Analyte Sensor and Holter-type Monitor System and Method of Using the Same", which is herein incorporated by reference.

As shown in FIGS. **30–33**, the characteristic monitor **2200** includes a display **2208** that is used to display the results of the measurement received from the sensor in the sensor set **2150** via a cable and connector **2180** attached to the telemetered characteristic monitor transmitter **2100**, or the like. In preferred embodiments, the display device **2208** is an active matrix LCD. However, alternative embodiments may use other display devices, such as simplified LCD, LED, fluorescent element, plasma screen, or the like. The results and information displayed includes, but is not limited to, trending information of the characteristic (e.g., rate of change of glucose), graphs of historical data, average characteristic levels (e.g., glucose), or the like. Alternative embodiments include the ability to scroll through the data. The display **2208** may also be used with the keypad **2202** on the characteristic monitor **2200** to program or update data in the characteristic monitor **2200**. In addition, the calibrated data using results from the characteristic meter **2300** can be displayed to provide a user with updated trend and glucose level data. This may also be used to update and show differences between the newly calibrated (or additional calibration) data and the data as it was prior to the new calibration (or additional calibration).

In other embodiments, if multiple characteristic sensors are used, the individual data for each characteristic sensor may be stored and displayed to show a comparison and an average between the two characteristic sensors.

It is noted that a typical user can have somewhat diminished visual and tactile abilities due to complications from diabetes or other conditions. Thus, the display **2208** and keypad **2202** are preferably configured and adapted to the needs of a user with diminished visual and tactile abilities. In alternative embodiments, the data, analyte level value, confirmation of information, or the like can be conveyed to the user by audio signals, such as beeps, speech or the like, or vibrations. Still further embodiments may use a touch screen instead of (or in some cases addition to) the keypad **2202** to facilitate water proofing and to minimize changes in the characteristic monitor **2200** hardware to accommodate improvements or upgrades. Additional embodiments of the present invention may include a vibrator alarm (or optional indicator such as an L.E.D.) in either, or both, the telemetered characteristic monitor transmitter **2100** and the characteristic monitor **2200** to provide a tactile (vibration) alarm to the user, such as sensor set **2150** malfunction, improper connection, low battery, missed message, bad data, transmitter interference, or the like. The use of a vibration alarm provides additional reminders to an audio alarm, which could be important to someone suffering an acute reaction, or where it is desireable to have non-audio alarms to preserve and conceal the presence of the characteristic monitor system **2010**.

As shown in FIG. **33**, further embodiments of the characteristic monitor **2200** may be used with a telemetered characteristic monitor transmitter **2100** coupled to a sensor set **2150** and an infusion pump **1010** connected to an infusion set **1038**. In this embodiment, the characteristic monitor **2200** is also used to program and obtain data from the infusion pump **1010**, or the like. This further reduces the amount of equipment, the user must have, since the characteristic monitor **2200** already includes a characteristic meter **2300** that will be required for calibration of the data from the telemetered characteristic monitor transmitter **2100**. Thus, the characteristic monitor **2200** can coordinate the sensor data and meter data with the data from the infusion pump **1010**, or update the delivery parameters of the infusion pump **1010**. The characteristic monitor **2200** may also be used to update and program the telemetered characteristic monitor transmitter **2100**, if the transmitter **2100** includes a receiver for remote programming, calibration or data receipt. Thus, the user may need only a single device—the characteristic monitor **2200** that will receive data from a sensor set **2150**, perform discrete tests of an analyte with the characteristic meter **2300**, program and control an infusion pump **1010**, and operate to download data or upload programming instructions to a computer, communication station, or the like.

As discussed, the characteristic monitor **2200** can also be used to store data obtained from the sensor set **2150** and then provide it to either an infusion pump **1010**, computer or the like for analysis. In further embodiments, the characteristic monitor **2200** can include a modem, or the like, to transfer data to and from a healthcare professional. Further embodiments, can receive updated programming or instructions via a modem connection. In addition, a relay or repeater **2004** may be used with a telemetered characteristic monitor transmitter **2100** and a characteristic monitor **2200** to increase the distance that the telemetered characteristic monitor transmitter **2100** can be used with the characteristic monitor **2200**, as shown in FIG. **28**. For example, the relay **2004** could be used to provide information to parents of children using the telemetered characteristic monitor trans-

mitter **2100** and the sensor set **2150** from a distance. The information could be used when children are in another room during sleep or doing activities in a location remote from the parents. In further embodiments, the relay **2004** can include the capability to sound an alarm. In addition, the relay **2004** may be capable of providing data from sensor set **2150** and telemetered characteristic monitor transmitter **2100** to a remotely located individual via a modem connected to the relay **2004** for display on a monitor, pager or the like. In alternative embodiments, the data from the characteristic monitor **2200** and sensor set **2150** may also be downloaded through a communication station **2008** (or alternatively, through a characteristic monitor **2200**, other data transfer device, or the like) to a remotely located computer **2006** such as a PC, lap top, or the like, over communication lines, by modem or wireless connection, as shown in FIG. **29**. Also, some embodiments may omit the communication station **2008** and use a direct modem or wireless connection to the computer **2006**. In further alternatives, either the characteristic monitor **2200** or the telemetered characteristic monitor transmitter **2100** may transmit an alarm to a remotely located device, such as a communication-station, modem or the like to summon help. In addition, further embodiments of the characteristic monitor **2200** may include the capability for simultaneous monitoring of multiple sensors. Data transmission may be to other devices or include the capability to receive data or instructions from other medical devices. Preferred embodiments, as shown in FIGS. **31** and **33**, use wireless RF frequencies; however, alternative embodiments may utilize IR, optical, ultrasonic, audible frequencies or the like. Further embodiments may also use a wired connection, as shown in FIG. **32**.

Preferably, the characteristic monitor system **2010** combines the characteristic monitor **2200** and character meter **2300** into a single device, but avoids an actual wired connection to the sensor set **2150** by using a telemetered characteristic monitor transmitter **2100**. By separating the characteristic monitor system **2010** electronics into two separate devices; a telemetered characteristic monitor transmitter **2100** (which attaches to the sensor set **2150**) and a characteristic monitor **2200**, several advantages are realized. For instance, the user can more easily conceal the presence of the characteristic monitor system **2010**, since a wire will not be visible (or cumbersome), with clothing. In also makes it is easier to protect the characteristic monitor **2200**, which can be removed from the user's body during showers, exercise, sleep or the like. In addition, the use of multiple components (e.g., transmitter **2100** and characteristic monitor **2200** with a characteristic meter) facilitates upgrades or replacements, since one module or the other can be modified or replaced without requiring complete replacement of the characteristic monitor system **2010**. Further, the use of multiple components can improve the economics of manufacturing, since some components may require replacement on a more frequent basis, sizing requirements may be different for each module, there may be different assembly environment requirements, and modifications can be made without affecting the other components.

FIG. **1** is a perspective view of a system **1** using a handheld data assistant (PDA) **10** and computer **12** in accordance with an embodiment of the present invention. Preferred embodiments, use a PDA **10** such as the Visor 1003E by Handspring. However, alternative embodiments, may use standard or customized personal data assistants such as, but not limited to, the Palm Pilot, Palm III, Palm V and/or Palm VII by Palm Computing a division of 3 COM, the PCS NP 1000 by Sprint, the pdQ 1900 by Qualcomm, the AutoPC by Clarion, Newton by Apple, the Cassiopeia by Casio, Blackberry by Research In Motion Limited, or the like. In preferred embodiments, the computer **12** includes a computer processing unit **14**, a monitor **16**, a key board **18** and a mouse **20**. The computer **12** also includes a PDA cradle **22** connected to the computer **12** by a cable **24** to provide two-way data communication between the PDA **10** and the computer **12**. In alternative embodiments, the PDA cradle **22** may connect to the computer using a wireless connection. In further alternative embodiments, the PDA cradle **22** may be omitted and the PDA **10** includes a receiver and transmitter and/or a jack to provide the two-way communication between the PDA **10** and the computer **12**. In further alternative embodiments, the computer **12** may be replaced with a different processing device, such as a data processor, a laptop computer, a modem or other connection to a network computer server, an internet connection, or the like.

FIGS. **2** and **3** are views of a PDA **10** with a medical device module **200** in accordance with an embodiment of the present invention. The PDA **10** includes a display **102** mounted in a case **104**. The case includes a plurality of physical keys **106** and **108** to activate and control various features on the PDA **10**. The display **102** of the PDA **10** is a touch screen LCD that allows the display of various icons **110** representative of different programs available on the PDA **10**. The icons **110** on the display **102** may be activated by finger pressure or the touch of a stylus **112**. The display **102** may also be used to show graphs, tabular data, animation, or the like. The display **102** also includes a region with hard icons **114** that represent regular program activating features and a writing area **116** for entering data using the stylus **112**. Preferred embodiments of the PDA **10** are adapted for use of the Palm computing software and standards developed by 3 Com. However, alternative embodiments may use computing software and standards produced by other companies.

As shown in FIG. **3**, the PDA **10** has a slot **120** formed in the back **124** of the case **104** of the PDA **10** for receiving the medical device module **200**. The slot **120** includes connector contacts **122** that mate with corresponding contacts **222** on the medical device module **200**. Thus, the PDA **10** provides a standard user interfaces, including standard PDA features and programmability, that the user knows and understands. A medical device manufacturer primarily only needs to design, build and qualify a medical device module that interfaces with a standard PDA **10** interface and uses the existing hardware of the PDA **10** to interact with the user. Therefore, a medical device manufacturer focuses primarily on a medical device module that can be interchanged by the user to provide the user with a desired capability or function on a known and/or familiar device, the PDA **10**. Further embodiments (not shown) may use multiple medical device modules or a medical device module that includes more than one medical device submodule.

FIG. **4** illustrates a perspective view of a PDA **10**, in accordance with a preferred embodiment of the present invention. The PDA **10** includes a subcutaneous sensor set **150** (i.e., a sensor portion is implanted in, for example, dermal subdermal, subcutaneous tissues, or the like), a telemetered characteristic monitor transmitter **100** connected to the sensor set **150** through a sensor cable/connector **180**, and a medical device module **200** that includes a characteristic monitor **200'** and a characteristic meter **300**. The subcutaneous sensor set **150** utilizes an electrode-type sensor, as described in more detail in U.S. Pat. No. 5,391,250, entitled "Method Of Fabricating Thin

Film Sensors", U.S. Pat. No. 5,482,473, entitled "Flex Circuit Connector", U.S. Pat. No. 5,390,671, entitled "Transcutaneous Sensor Insertion Set", U.S. Pat. No. 5,568,806, entitled "Transcutaneous Sensor Insertion Set", U.S. Pat. No. 5,586,553, entitled "Transcutaneous Sensor Insertion Set", U.S. Pat. No. 5,779,655, entitled "Transducer Introducer Assembly" and co-pending U.S. Pat. No. 5,954,643, entitled "Insertion Set for a Transcutaneous Sensor," all of which are herein incorporated by reference. However, in alternative embodiments, the sensor may use other types of sensors, such as chemical based, optical based, or the like. In further alternative embodiments, the sensors may be of a type that is used on the external surface of the skin or placed just below the skin layer of the user. Preferred embodiments of a surface mounted sensor would utilize interstitial fluid harvested from underneath the skin.

The telemetered characteristic monitor transmitter **100** generally includes the capability to transmit data. However, in alternative embodiments, the telemetered characteristic monitor transmitter **100** may include a receiver, or the like, to facilitate two-way communication of data reading between the sensor set **150** and the characteristic monitor **200'** of the medical device module **200**. The characteristic monitor **200'** in the medical device module **200** utilizes the transmitted data to determine the characteristic reading. Although a telemetered approach that utilizes RF is preferred, other wireless techniques, such as optical, IR, ultrasonic, or the like may be used. In addition, wired connections may be utilized instead of a telemetered transmission of data from the sensor **150** to the medical device module **200** (see FIG. **18** below).

The characteristic meter **300** utilizes test strips **350**, or the like, with a sample obtained from the body of the patient to determine a characteristic (or analyte level) in a user at a discrete point in time. The discrete measurement from the characteristic meter **300** is stored in a memory of the medical device module **200** and may be used to calibrate the characteristic monitor **200'** in the medical device module **200** against the test results from the characteristic meter **300**, either in real time or using a post calibration in either the characteristic monitor **200'** in the medical device module **200** or during later analysis and review once the test results have been downloaded to a separate computer, communication station, or the like. Possible characteristic meters **300** that may be used are produced by Roche Diagnostics, Bayer Corporation, Abbott Medisense, Johnson & Johnson, Mercury Diagnostics, Chronimed, or the like.

FIG. **5** illustrates a simplified flow block diagram of the medical device module **200** shown in FIGS. **4** and **6**. As shown in FIG. **5**, the medical device module **200** includes the characteristic meter **300** and also the characteristic monitor **200'** that interfaces with a sensor set **150**. The medical device module **200** includes a keypad interface **202**, a ROM **204**, a RAM **206**, a display interface **208**, a data Input and Output (I/O) port **210** that uses the contacts **222** on the medical device module **200** to connect with the contacts **122** on the PDA **10**, a sensor monitor **212**, a sensor interface **214**, a microprocessor **216**, and a battery and/or power supply **218**. An overlapping subset of these elements is used to process the data from the sensor **150** and is collectively shown as the characteristic monitor **200'**. The characteristic meter **300**, included in the medical device module **200**, includes a characteristic test meter **302** and a test interface **304**.

The microprocessor **216** of the medical device module **200** is activated in several different ways. The keypad interface **202** is coupled directly to the microprocessor **216** and is useable to activate the microprocessor **216** upon activation of the keys **106** and **108** and/or display **102** of the PDA **10**. The microprocessor **216** is then prepared to store relevant information concerning the sensor data, meter readings, event data, or the like. For instance, the microprocessor **216** will store, the time, the date and the analyte level from a test strip **350** or may be used to record an independent event by the user. In addition, the keypad interface **202**, unpin interfacing with the PDA **10**, may be used to activate and control the microprocessor **216** to perform analysis, calibration, control the display interface **208** and display **102**, download stored data and results, upload program instructions, or the like. The microprocessor **216** may also be activated by receiving a specified signal from the sensor interface **214** indicating connection or receipt of data from a sensor **150** and/or by insertion of a test strip **350** into the test interface **304** of the included characteristic meter **300**. Once activated, the microprocessor **216** stores data, analyzes signal values, tests results for accuracy, calibrates, downloads data, presents data for review and analysis, provides instructions, warnings and alarms, or the like.

The microprocessor **216** is coupled to a ROM **204** and a RAM **206**. In preferred embodiments, the ROM **204** is an EPROM and the RAM **206** is a static RAM; however, other comparable memory storage components such as dynamic RAM, non-static RAM, rewritable ROMs, flash memory, or the like, may be used. Generally, the ROM **204** stores the programs used by the microprocessor **216** to determine various parameters, such as the amount of an analyte corresponding to a received signal value in the sensor monitor **212** signal value, calibration techniques for adjusting the sensor signals from the sensor **150**, characteristic meter **300** operation and correspondence of test results with the sensor signal values, the date and the time, and how to report information to the user. The RAM **206** is used by the microprocessor **216** to store information about the sensor signal values and test strip **350** test results for later recall by the user or the doctor. For example, a user or doctor can transcribe the stored information at a later time to determine compliance with the medical regimen or a comparison of analyte value levels to medication administration. This is accomplished by downloading the information to the display **102** through the display interface **208** and then transcribing all of the stored records at one time as they appear on the display **208**. In addition, the RAM **206** may also store updated program instructions and/or patient specific information.

In preferred embodiments, the microprocessor **216** is coupled to a data input and output (I/O) port **210** that uses the contacts **222** on the medical device module **200** to connect with the contacts **122** on the PDA **10**, and the user can download the stored information to an external computer (see FIG. **1**), or the like, through the data I/O port **210** for evaluation, analysis, calibration, or the like. Preferably, the data I/O port **210** is capable of transferring data in both directions so that updated program instructions or reminder alarms can be set by the user or doctor. In preferred embodiments, the I/O port **210** uses the infrared (IR) technology of the PDA **10** or may include its own IR transceivers similar to those shown and described in U.S. Pat. No. 5,376,070 entitled "Data Transfer System for an Infusion Pump", or the like, which is herein incorporated by reference. However, in alternative embodiments, the I/O port **210** may use other data transfer technologies such as cables, fiber optics, RF, or the like. In still other embodiments, the data I/O port **210** may include multiple ports to support multiple

communication protocols or methods, or may include a universal port capable of transmitting data in several different modes. In preferred embodiments, the stored data may be downloaded to (or new program instructions and data uploaded from) a computer, communication station, or the like. In alternative embodiments, the stored data may be downloaded to (or new program instructions and data uploaded from) an infusion pump, or the like.

The keypad interface **202** provides the user with the capability to set parameters in the medical device module using the keys **106** and **108** and/or display **102** of the PDA **10**. Such capabilities include, but are not limited to, storing additional information, setting the date and the time, or setting alarms to indicate when to take the next test with the characteristic meter **300**. The keypad interface **202** is used in conjunction with the display interface **208** to access the various modes, alarms, features, or the like, by utilizing methods typically employed to set the parameters on a conventional glucose meter, an infusion pump, or the like. Except this is all done through the use of a standard PDA interface.

The medical device module **200** also includes a self contained battery and power supply **218**. Preferably, the medical device module **200** uses batteries (not shown) to provide power to the medical device module **200**. For example, a plurality of silver oxide batteries, such as two or three, may be used. However, it is understood that different battery chemistries may be used, such as lithium, alkaline or the like, and different numbers of batteries can be used. In preferred embodiments, the batteries have a life in the range of 1 month to 1 year, and provide a low battery warning alarm. Alternative embodiments may provide longer or shorter battery lifetimes, or include a power port to permit recharging of rechargeable batteries in the medical device module **200**. Further alternative embodiments may use the power supply (not shown) that is already included in the PDA **10** or recharge its own batteries through the power supplied by the cradle **22**.

The ROM **204** of the medical device module **200** also stores additional programs to operate and control the characteristic meter **300**. Moreover, the RAM **206** of the medical device module **200** can stores results obtained from the characteristic meter **300**. As shown in FIG. **5**, a test strip **350** for holding an analyte sample is inserted into the test interface **302**. This activates the characteristic test meter **304** and the microprocessor **216**. The characteristic test meter **304** analyzes the characteristics and sends the analysis results to the microprocessor **216**, which displays the results on the display **102** and stores the results in the RAM **206** for later review.

The programs for controlling the sensor monitor **212** of the characteristic monitor **200'** are also stored in the ROM **204**, and sensor data signal values received by the sensor interface **214** from the sensor set **150** are processed by the sensor monitor **212** and the microprocessor **216**, and then the results are stored in the RAM **206**. The sensor monitor **212** and the sensor interface **214** can be activated by a wired connection to a sensor set **150** that draws power from the characteristic monitor, by receipt of a signal from the telemetered characteristic monitor transmitter **100**, or by the keys **106** and **108** and/or display **102** through the keypad interface **202**. Preferred embodiments use a characteristic monitor **200'** (in which the system includes a Potentiostat such as sensor monitor **212**) to receive the sensor signals from a telemetered characteristic monitor transmitter **100**, as shown in U.S. patent application Ser. No. 09/377,472 entitled "Telemetered Characteristic Monitor System and Method of Using the Same", which is herein incorporated by reference. In alternative embodiments, the sensor signals may be received on a more infrequent (or periodic) basis from a Holter-type monitor system, as shown in U.S. patent application Ser. No. 09/246,661 entitled "An Analyte Sensor and Holter-type Monitor System and Method of Using the Same", which is herein incorporated by reference.

Preferred embodiments store the raw received sensor signals values from the sensor monitor **212** and the test results from the characteristic test meter **304** of the characteristic meter in the RAM **206**. However, alternative embodiments may also store calibrated and adjusted results in the RAM **206** for downloading, later analysis and review. Further embodiments may only store adjusted results.

Once activated, the sensor interface **214** continuously, intermittently or near continuously receives signals from the sensor set **150** that are representative of an analyte level being monitored in a user. In preferred embodiments, the sensor monitor **212** is used in conjunction with the microprocessor **216** to store, smooth the data and determine a corresponding analyte level from the signals received from the sensor interface **214**. The corresponding value may be shown on the display **208**. The characteristic monitor **200'** of the medical device module **200** may also perform calibration of the sensor signal values using values provided by the characteristic meter **300**. The calibration may be performed on a real-time basis and/or backwards recalibrated (e.g., retrospectively). In further embodiments, the microprocessor **216** monitors the sensor signals from the sensor monitor **212** to determine when the characteristic meter **300** should be used to perform tests to be used for calibration of the sensor data signals. For instance, the microprocessor **216** could indicate that the calibration test should be delayed if the sensor data signals from the sensor monitor **212** are changing too rapidly and suggest a calibration reading when the sensor data readings are relatively stable. Also, the characteristic monitor **200'** of the medical device module **200** may prompt the user to perform calibration at periodic preset intervals. Alternatively, the characteristic monitor **200'** of the medical device module **200** may prompt the user to perform the calibration based upon event-triggered intervals, that are either user input, such as meals, exercise, or the like, or that are trend input, such as large excursions in glucose levels, faulty or interrupted data readings, or the like.

As shown in FIGS. **1–4**, the PDA **10** includes a display **102** that is used to display the results of the measurement received from the sensor in the sensor set **150** via a cable and connector **180** attached to the telemetered characteristic monitor transmitter **100**, or the like. The results and information displayed includes, but is not limited to, trending information of the characteristic (e.g., rate of change of glucose), graphs of historical data, average characteristic levels (e.g., glucose), or the like. Alternative embodiments include the ability to scroll through the data. The display **102** may also be used with the key **106** and **108** on the PDA **10** to program or update data in the medical device module **200**. In addition, the calibrated data using results from the characteristic meter **300** can be displayed to provide a user with updated trend and glucose level data. This may also be used to update and show differences between the newly calibrated (or additional calibration) data and the data as it was prior to the new calibration (or additional calibration).

In other embodiments, if multiple characteristic sensors are used, the individual data for each characteristic sensor may be stored and displayed to show a comparison and an average between the two characteristic sensors.

It is noted that a typical user can have somewhat diminished visual and tactile abilities due to complications from diabetes or other conditions. Thus, the display **102** and/or keys **106** and **108** are preferably configured and adapted to the needs of a user with diminished visual and tactile abilities. In alternative embodiments, the data, analyte level value, confirmation of information, or the like can be conveyed to the user by audio signals, such as beeps, speech or the like, or vibrations. Further alternatives may include a microphone (not shown) and related circuitry to allow voice activated control of the infusion device.

Additional embodiments of the present invention may include a vibrator alarm (or optional indicator such as an L.E.D.) in either, or both, the telemetered characteristic monitor transmitter **100** and the medical device module **200** to provide a tactile (vibration) alarm to the user, such as sensor set **150** malfunction, improper connection, low battery, missed message, bad data, transmitter interference, or the like. The use of a vibration alarm provides additional reminders to an audio alarm, which could be important to someone suffering an acute reaction, or where it is desirable to have non-audio alarms to preserve and conceal the presence of the characteristic monitor system **10**.

FIGS. **7** and **8** show a second embodiment of the medical device module **200** may be used with a telemetered characteristic monitor transmitter **100** coupled to a sensor set **150** and an infusion pump **400** connected to an infusion set **450**. In this embodiment, the medical device module **200** is also used to program and obtain data from the infusion pump **400**, or the like. This further reduces the amount of equipment, the user must have, since the medical device module **200** already includes a characteristic monitor **200'** and a characteristic meter **300** that will be required for calibration of the data from the telemetered characteristic monitor transmitter **100**. Thus, the medical device module **200** can coordinate the sensor data and meter data with the data from the infusion pump **400**, or update the delivery parameters of the infusion pump **400**. The medical device module **200** may also be used to update and program the telemetered characteristic monitor transmitter **100**, if the transmitter **100** includes a receiver for remote programming, calibration or data receipt. Thus, the user may need only a single device—the medical device module **200** in the PDA **10** that will receive data from a sensor set **150**, perform discrete tests of an analyte with the characteristic meter **300**, program and control an infusion pump **400**, and operate to download data or upload programming instructions to a computer, communication station, or the like.

As discussed, the medical device module **200** can also be used to store data obtained from the sensor set **150** and then provide it to either an infusion pump **400**, computer or the like for analysis. In further embodiments, the medical device module **200** can include a modem, or the like, to transfer data to and from a healthcare professional. Further embodiments, can receive updated programming or instructions via a modem connection. In addition, a relay or repeater **4** may be used with a telemetered characteristic monitor transmitter **100** and a medical device module **200** to increase the distance that the telemetered characteristic monitor transmitter **100** can be used with the medical device module **200**, as shown in the third embodiment of FIG. **9**. For example, the relay **4** could be used to provide information to parents of children using the telemetered characteristic monitor transmitter **100** and the sensor set **150** from a distance. The information could be used when children are in another room during sleep or doing activities in a location remote from the parents. In further embodiments, the relay **4** can include the capability to sound an alarm. In addition, the relay **4** may be capable of providing data from sensor set **150** and telemetered characteristic monitor transmitter **100** to a remotely located individual via a modem connected to the relay **4** for display on a monitor, pager or the like. In alternative embodiments, the data from the medical device module **200** and sensor set **150** may also be downloaded through a communication station **8** (or alternatively, through a medical device module **200**, other data transfer device, or the like) to a remotely located computer **6** such as a PC, lap top, or the like, over communication lines, by modem or wireless connection, as shown in the fourth embodiment of FIG. **10**. Also, some embodiments may omit the communication station **8** and use a direct modem or wireless connection to the computer **6**. In further alternatives, either the medical device module **200** or the telemetered characteristic monitor transmitter **100** may transmit an alarm to a remotely located device, such as a communication station, modem or the like to summon help. In addition, further embodiments of the characteristic monitor **200'** of the medical device module **200** may include the capability for simultaneous monitoring of multiple sensors. Data transmission may be to other devices or include the capability to receive data or instructions from other medical devices. Preferred embodiments, as shown in FIGS. **1–8**, use wireless RF frequencies; however, alternative embodiments may utilize IR, optical, ultrasonic, audible frequencies or the like. Further embodiments may also use a wired connection, as shown in FIG. **18**.

Preferably, the PDA **10** uses a medical device module **200** that combines the characteristic monitor **200'** and character meter **300** into a single device, but avoids an actual wired connection to the sensor set **150** by using a telemetered characteristic monitor transmitter **100**. By separating the PDA **10** electronics into two separate devices; a telemetered characteristic monitor transmitter **100** (which attaches to the sensor set **150**) and a characteristic monitor **200'**, several advantages are realized. For instance, the user can more easily conceal the presence of the PDA **10** and the telemetered characteristic monitor transmitter **100**, since a wire will not be visible (or cumbersome), with clothing. In also makes it is easier to protect the medical device module **200** with a characteristic monitor **200'**, which can be removed from the user's body during showers, exercise, sleep or the like. In addition, the use of multiple components (e.g., transmitter **100** and medical device module **200** with a characteristic monitor **200'** with a characteristic meter) facilitates upgrades or replacements, since one module or the other can be modified or replaced without requiring complete replacement of the system. Further, the use of multiple components can improve the economics of manufacturing, since some components may require replacement on a more frequent basis, sizing requirements may be different for each module, there may be different assembly environment requirements, and modifications can be made without affecting the other components. For instance, the PDA **10** with its standard interface and other uses can be mass produced at lower cost. And the medical device module **200** can be made to rigorous medical standards at lower cost than a complete device with an interface comparable to the PDA **10**. This lowers the overall system costs, which permits quicker upgrades or design modifications. Thus, manufacturers can bring new devices and/or options to market in less time and cost and with less risk.

FIG. **11** is a perspective view of a medical device module **500** that interfaces with a telemetered characteristic monitor transmitter **100** in accordance with a fifth embodiment of the

present invention. This medical device module **500** includes a characteristic monitor **200'** as described above, and communicates with the telemetered characteristic monitor transmitter **100** to transfer data signals from a sensor set. This embodiment does not include a characteristic meter as described above. Preferably, the communication between the medical device module **500** and telemetered characteristic monitor transmitter **100** is wireless, as described above. However, in alternative embodiments, a wired connection such as shown in FIG. **18** may be used. In further alternative embodiments, the medical device module **500** may also just act as a interface and communication device for the PDA **10** to receive processed data from the telemetered characteristic monitor transmitter **100**, if the telemetered characteristic monitor transmitter **100** is a fully functional characteristic monitor that includes many of the functions of the characteristic monitor **200'** described above.

FIG. **12** is a perspective view of a medical device module **520** that interfaces with a characteristic meter **522** in accordance with a sixth embodiment of the present invention. Preferably, the communication between the medical device module **520** and characteristic meter **522** is wireless, as described above. However, in alternative embodiments, a wired connection such as shown in FIG. **18** may be used. This embodiment does not include a characteristic monitor **200'** or a characteristic meter **300** within the medical device module, as described above. Rather, this embodiment provides an interface with the PDA **10** and communication capability between the PDA **10** and the characteristic meter **522**.

FIG. **13** is a perspective view of a medical device module **540** that interfaces with an infusion device **400**, telemetered characteristic monitor transmitter **100** and a characteristic meter **522** in accordance with a seventh embodiment of the present invention. This embodiment does not include a characteristic meter **300** within the medical device module, as described above. Rather, this embodiment provides an interface with the PDA **10** and communication capability between the PDA **10** and the telemetered characteristic monitor transmitter **100**, the characteristic meter **522**, and the infusion device **400**. This medical device module **540** includes a characteristic monitor **200'**, and communicates with the telemetered characteristic monitor transmitter **100** to transfer data signals from a sensor set and the infusion device **400** as described above. Preferably, the communication between the medical device module **500** and telemetered characteristic monitor transmitter **100**, the infusion device **400**, and the characteristic meter **522** is wireless, as described above. However, in alternative embodiments, a wired connection such as shown in FIG. **18** may be used. In further alternative embodiments, the medical device module **500** may also just act as a interface and communication device for the PDA **10** to receive processed data from the telemetered characteristic monitor transmitter **100**, if the telemetered characteristic monitor transmitter **100** is a fully functional characteristic monitor that includes many of the functions of the characteristic monitor **200'** described above.

FIG. **14** is a perspective view of a medical device module **560** that includes a characteristic meter **300** and interfaces with an infusion device **400** in accordance with an eighth embodiment of the present invention. This embodiment does not include a characteristic monitor **200'** within the medical device module, as described above. Rather, this embodiment provides an interface with the PDA **10** and communication capability between the PDA **10** and the infusion device **400**. Preferably, the communication between the medical device module **560** and the infusion device **400** is wireless, as described above. However, in alternative embodiments, a wired connection such as shown in FIG. **18** may be used.

FIG. **15** is a perspective view of a medical device module **580** that includes a characteristic meter **300** in accordance with a ninth embodiment of the present invention. This embodiment does not include the characteristic monitor **200'** as described above. It is primarily adapted to providing blood glucose test capabilities to the PDA **10**. Preferably, the test results and any relevant data input by the user can be downloaded, or updated program instructions can be uploaded to the medical device module **580** through either a wireless or wired connection.

FIG. **16** is a perspective view of a medical device module **600** that interfaces with an infusion device in accordance with a tenth embodiment of the present invention. This embodiment does not include a characteristic monitor **200'** or a characteristic meter **300** within the medical device module, as described above. Rather, this embodiment provides an interface with the PDA **10** and communication capability between the PDA **10** and the infusion device **400**. Preferably, the communication between the medical device module **600** and the infusion device **400** is wireless, as described above. However, in alternative embodiments, a wired connection such as shown in FIG. **18** may be used.

FIG. **17** is a perspective view of a medical device module **620** that interfaces with an implantable medical device **622** in accordance with a tenth embodiment of the present invention. Preferred embodiments of the implantable medical device **622** may be an infusion device, a characteristic monitor and/or sensor, a pacemaker, a neurostimulator, or the like. Generally, the devices are completely implanted in the body tissue **624** of a user. The medical device module **620** acts as an interface to the PDA **10** to communicate with and/or receive data from the implantable medical device **622**. This embodiment is not shown with a characteristic monitor **200'** or characteristic meter **300**. However, alternative embodiments could include either or both with a characteristic monitor **200'** or characteristic meter **300** as well as interfacing with the implantable medical device.

FIG. **18** is a perspective view of a medical device module **640** that includes a input jack **646** for a wired connection with a medical device **642** in accordance with an eleventh embodiment of the present invention. The medical device **642** can be any of the devices described herein. The medical device module **640** is coupled to a cable **644** through an input jack **646**. The medical device **642** is also coupled to the cable **644** through an input jack **648** to complete the connection between the medical device module **640** and medical device **642**. In particular embodiments, the medical device module **640** may include a modem, or the like, for facilitating the transfer of data and/or information to the medical device **642**. In further embodiments, the input jack **646** is an RS-232 port. However, different types of jacks, plugs and connectors may be used. In alternative embodiments, the medical device module **640** may also include the capability to transfer data and/or information by wireless communication, as described above.

FIG. **19** is a perspective view of a medical device module **660** that interfaces with an implantable analyte sensing patch **662** in accordance with a twelfth embodiment of the present invention. As shown, the implantable patch **662** is generally implanted under the skin **664** of the user. However, in alternative embodiments, the implantable patch may be implanted in other body tissue, as described above, or attached to the skin surface of the user. Preferably, the implantable patch **662** includes a photo-reactive substance

or compound **76** that optically changes, fluoresces, or the like, or other suitable compounds that detect changing properties in the presence of a bodily fluid analyte, such as glucose or the like. The compounds can also be used to detect the level of an analyte that has been ingested, injected or placed inside the body, such as marker substances, or the like. For example, possible compounds, including but not limited to, produce a fluorescent change in the presence of a bodily fluid analyte are disclosed in U.S. Pat. No. 5,503,770 issued Apr. 2, 1996 to James et al. and entitled "Fluorescent Compound Suitable For Use In The Detection Of Saccharides"; U.S. Pat. No. 5,512,246 issued Apr. 30, 1996 to Russell et al. and entitled "Method and Means for Detecting Polyhydroxyl Compounds"; U.S. Provisional Application Serial No. 60/007,515 to Van Antwerp et al. and entitled "Minimally Invasive Chemically Amplified Optical Glucose Sensor"; and U.S. Pat. No. 6,011,984 to Van Antwerp et al. and entitled "Detection of Biological Molecules Using Chemical Amplification", all of which are herein incorporated by reference. Other compounds using Donor Acceptor fluorescent techniques may be used, such as disclosed in U.S. Pat. No. 5,628,310 issued May 13, 1997 to Rao et al. and entitled "Method and Apparatus to Perform Trans-cutaneous Analyte Monitoring"; U.S. Pat. No. 5,342,789 issued Aug. 30, 1994 to Chick et al. and entitled "Method and Device for Detecting and Quantifying Glucose in body Fluids"; and U.S. Pat. No. 5,246,867 issued Sep. 21, 1993 to Lakowicz et al. and entitled "Determination and Quantification of Saccharides by Luminescent Lifetimes and Energy Transfer", all of which are herein incorporated by reference. In still further embodiments, the medical device module may interface with the implantable patch using other communication methods, such as RF or the like.

FIG. **20** is a perspective view of a medical device module **680** that includes contacts **684** for interfacing with a medical device **682** in accordance with a thirteenth embodiment of the present invention. The medical device **682** can be any of the devices described herein. The medical device module **680** is coupled to the medical device **642** by contact **684** being coupled with corresponding contacts **686** on the medical device **642** to complete the connection between the medical device module **680** and medical device **682**. In particular embodiments, the contacts **684** and **686** establish a connection by simply lining up and putting the two device together. In other embodiments, the contacts **684** and **686** are physically coupled together to reduce the likelihood that the connection will be accidentally terminated. In other embodiments, the contacts **684** are used as electrodes to measure electrical characteristics of the user. For instance, the contacts may be placed against the skin of the user to measure pulse, heart rate, sweat effects, or the like. This embodiment may utilize a wired or wireless connection to transfer data received through the contacts **684** of the medical device monitor **680** to another medical device, or the like.

While the description above refers to particular embodiments of the present invention, it will be understood that many modifications may be made without departing from the spirit thereof. The accompanying claims are intended to cover such modifications as would fall within the true scope and spirit of the present invention.

The presently disclosed embodiments are therefore to be considered in all respects as illustrative and not restrictive, the scope of the invention being indicated by the appended claims, rather than the foregoing description, and all changes which come within the meaning and range of equivalency of the claims are therefore intended to be embraced therein.

What is claimed is:

1. A remote programmer for interfacing with at least one medical device, the remote programmer comprising:

at least one medical device module operatively coupled with the remote programmer and including at least one medical device interface including a sensor receiver for interfacing with and receiving sensor data signals at a predetermined rate from a characteristic sensor, wherein the sensor data signals monitor a characteristic of a user over a period of time, wherein the sensor data signals are received by the sensor receiver near continuously;

at least one processor to interface with the remote programmer and coupled to the at least one medical device interface to process the sensor data signals;

a housing adapted to contain the medical device module and the at least one processor;

a characteristic meter within the housing for receiving and testing a discrete sample of an analyte to determine the quantity of the analyte independently of the characteristic sensor, wherein the processor is coupled to the sensor receiver and the characteristic meter to process the determined quantity of the analyte from the characteristic meter and the sensor data signals from the characteristic sensor;

at least one input/output port for communicating with the characteristic sensor;

at least one display including at least one touch screen element to interface with at least one of the at least one processor and the characteristic sensor;

at least one button to interface with at least one of the at least one processor and the characteristic sensor;

at least one audio indication device coupled to the at least one processor to provide an audio indication; and

at least one portable power supply contained within the housing of the remote programmer to provide power to at least one of the at least one processor.

2. The remote programmer according to claim **1**, wherein the at least one medical device module has a separate housing that is adapted to couple with the housing of the remote programmer.

3. The remote programmer according to claim **1**, wherein the characteristic sensor is remotely located from the at least one medical device module, and wherein the sensor receiver receives the sensor data signals as wireless signals from the remotely located characteristic sensor.

4. The remote programmer according to claim **1**, further including a transmitter coupled to the at least one processor and the at least one input/output port for transmitting the processed sensor data signals to another data receiving device.

5. The remote programmer according to claim **1**, wherein the at least one medical device module uses the display of the remote programmer to show the determined quantity of the analyte from the characteristic meter and the processed sensor data signals from the characteristic sensor.

6. The remote programmer according to claim **1**, wherein the at least one processor monitors the sensor data signals from the sensor receiver to determine when the characteristic meter is to be used to perform calibration of the sensor data signals.

7. The remote programmer according to claim **1**, further including at least one memory to store the determined quantity of the analyte from the characteristic meter and the processed sensor data signals from the characteristic sensor.

8. The remote programmer according to claim **1**, wherein the sensor data signals are received by the sensor receiver continuously.

9. The remote programmer according to claim 1, wherein the remote programmer is personal data assistant (PDA).

10. A medical device module for use in a system with at least one medical device and the remote programmer according to claim 1, the medical device module comprising:

a module housing adapted to couple with the housing of the remote programmer;

the at least one medical device interface is coupled to the module housing including a sensor receiver for interfacing with and receiving sensor data signals at a predetermined rate from a characteristic sensor, wherein the sensor data signals monitor a characteristic of a user over a period of time, wherein the sensor data signals are received by the sensor receiver near continuously; and

at least one module processor coupled to the at least one medical device interface to process the sensor data signals wherein the at least one module processor is capable of interfacing with the at least one processor of the remote programmer; and

a characteristic meter within the housing for receiving and testing a discrete sample of an analyte to determine the quantity of the analyte independently of the characteristic sensor, wherein the processor is coupled to the sensor receiver and the characteristic meter to process the determined quantity of the analyte from the characteristic meter and the sensor data signals from the characteristic sensor.

11. A medical device module for use in a system with at least one medical device and the remote programmer according to claim 1, the medical device module comprising:

a housing adapted to couple with the remote programmer:

an interface coupled to the housing for remotely interfacing with an infusion device and including a sensor receiver for interfacing with and receiving sensor data signals at a predetermined rate from a characteristic sensor, wherein the sensor data signals monitor a characteristic of a user over a period of time; and

a processor coupled to the interface to process the sensor data signals or instructions for or received data from the infusion device, and wherein the processor is capable of interfacing with the remote programmer.

12. The remote programmer according to claim 11, wherein the processed instructions updates delivery parameters of the infusion device.

13. The remote programmer according to claim 11, further comprising:

a characteristic meter within the housing for receiving and testing a discrete sample of an analyte to determine the quantity of the analyte, wherein the processor is coupled to the characteristic meter to process the determined quantity of the analyte from the characteristic meter.

14. The remote programmer according to claim 1, further including a transmitter coupled to the at least one processor and the at least one input/output port, wherein the at least one processor further includes the ability to program other medical devices, and wherein the transmitter transmits a program to the other medical devices.

15. The remote programmer according to claim 14, wherein the transmitter transmits through a relay device between the transmitter and a remotely located processing device.

16. The remote programmer according to claim 15, wherein the relay device increases a maximum distance by amplifying the processed sensor data signals from the transmitter to be received by the remotely located processing device.

17. The remote programmer according to claim 15, wherein the relay device enables the remotely located processing device to be located in a different room than the transmitter.

18. The remote programmer according to claim 13, wherein the relay device includes a telecommunications device, and wherein when the transmitter generates an alarm the telecommunications device transmits the alarm to a remotely located receiving station.

19. The remote programmer according to claim 1, further including a data receiver, and wherein the data receiver receives program instructions from other processing devices.

20. A remote programmer for interfacing with at least one medical device, the remote programmer comprising:

a housing adapted to couple with the remote programmer;

an interface coupled to the housing for remotely interfacing with an infusion device and including a sensor receiver for interfacing with and receiving sensor data signals at a predetermined rate from a characteristic sensor, wherein the sensor data signals monitor a characteristic of a user over a period of time; and

a processor coupled to the interface to process the sensor data signals or instructions for or received data from the infusion device, and wherein the processor is capable of interfacing with the remote programmer.

21. The remote programmer according to claim 20, wherein the processed instructions updates delivery parameters of the infusion device.

22. The remote programmer according to claim 20, further comprising:

a characteristic meter within the housing for receiving and testing a discrete sample of an analyte to determine the quantity of the analyte, wherein the processor is coupled to the characteristic meter to process the determined quantity of the analyte from the characteristic meter.

* * * * *