UNITED STATES PATENT AND TRADEMARK OFFICE

BEFORE THE PATENT TRIAL AND APPEAL BOARD

APPLE INC.,
Petitioner,

v.

OMNI MEDSCI, INC.,
Patent Owner.

Patent No. 10,517,484

IPR2021-00453

DECLARATION OF BRIAN ANTHONY, PH. D. REGARDING U.S. PATENT NO. 10,517,484

TABLE OF CONTENTS

I. INTRODUCTION 1

A. Engagement 1

B. Background and Qualifications 1

C. Compensation 5

D. Information Considered 6

II. LEGAL STANDARDS FOR PATENTABILITY 6

A. Anticipation 8

B. Obviousness 9

III. BACKGROUND INFORMATION ABOUT THE ’484 PATENT 11

A. The Prosecution History of the ’484 Patent 11

B. IPR2019-00916 Involving U.S. Patent No. 9,651,533 13

C. Technical Field 13

D. Level of Ordinary Skill in the Art 13

IV. TECHNICAL BACKGROUND 14

A. Photoplethysmography 14

B. Industry Trends 22

V. ANALYSIS OF THE ’484 PATENT 29

A. Overview of the ’484 Patent 29

B. Construction of Terms Used in the ’484 Patent Claims 30

VI. IDENTIFICATION OF THE PRIOR ART 33

VII. ANALYSIS OF THE PRIOR ART AND ’484 CLAIMS 34

A. Lisogurski and Carlson Render Obvious Claims 1, 7, 15, and 17 34

1. Overview of Lisogurski 34

2. Overview of Carlson 37

3. A Person of Ordinary Skill in the Art Would Have Modified Lisogurski to Incorporate Elements Shown in Carlson 38

4. Lisogurski and Carlson Describe the Elements of Independent Claims 1, 7, and 15 of the ’484 Patent 41

a) Preamble 43

b) “a wearable device adapted to be placed on a wrist or an ear of a user” 46

c) “including a light source comprising a plurality of semiconductor sources that are light emitting diodes, each of the light emitting diodes configured to generate an output optical light having one or more optical wavelengths”.....46

d) “the wearable device comprising one or more lenses configured to receive a portion of at least one of the output optical lights and to direct a lens output light to tissue” 48

e) “the wearable device further comprising a detection system configured to receive at least a portion of the lens output light reflected from the tissue and to generate an output signal having a signal-to-noise ratio” 53

f) “wherein the detection system is configured to be synchronized to the light source” 55

g) “wherein the detection system comprises a plurality of spatially separated detectors, and wherein at least one analog to digital converter is coupled to at least one of the spatially separated detectors”.....59

h) “wherein a detector output from the at least one of the plurality of spatially separated detectors is coupled to an amplifier having a gain configured to improve detection sensitivity” 61

i) “a smart phone or tablet comprising a wireless receiver, a wireless transmitter, a display, a microphone, a speaker, one or more buttons or knobs, a microprocessor and a touch screen, the personal device configured to receive and process at least a portion of the output signal” 63

j) “a cloud configured to receive over the wireless transmission link an output status comprising the at least a portion of the processed output signal, to process the received output status to generate processed data and to store the processed data”..66

(i) "wherein the output signal is indicative of one or more of the physiological parameters, and the cloud is configured to store a history of at least a portion of the one or more physiological parameters over a specified period of time" 68

k) "the wearable device configured to increase the signal-to-noise ratio" 72

(i) "by increasing light intensity of at least one of the [plurality of] semiconductor sources from an initial light intensity" 76

(ii) "by increasing a pulse rate of at least one of the plurality of semiconductor sources from an initial pulse rate" 80

l) "the detection system further configured to generate a first signal responsive to light received while the light emitting diodes [or semiconductor sources] are off" 90

m) "[the detection system configured] to generate a second signal responsive to light received while at least one of the light emitting diodes [or semiconductor sources] is on" 94

n) "[the detection system configured to] increase the signal-to-noise ratio by differencing the first signal and the second signal" 96

5. Claim 17 98

B. Lisogurski, Carlson, and Tran Render Obvious Claims 1-4, 7-12, and 15-22 98

1. Overview of Tran 99

2. A Person of Ordinary Skill in the Art Would Have Modified the combination of Lisogurski and Carlson to Incorporate Elements Shown in Tran 99

3. Claims 1, 7, 15, and 17 102

4. Claims 2, 10, and 18 103

5. Claims 3, 8, and 16 105

6. Claims 9 106

7. Claims 11 and 19 107

8. Claims 4, 12, 21 and 22 108

9. Claims 20 108

C. Lisogurski, Carlson, Tran, and Isaacson Render Obvious Claims 5 and 13 109

1. Overview of Isaacson 109

2. A Person of Ordinary Skill In the Art Would Have Modified the combined system of Lisogurski, Carlson, and Tran to Incorporate Elements Shown in Isaacson 113

3. Claims 5 and 13 117

D. Lisogurski, Carlson, Tran, Isaacson, and Valencell Render Obvious Claims 6, 14, and 23 121

1. Overview of Valencell-093 122

2. A Person of Ordinary Skill In the Art Would Have Modified Lisogurski and Carlson to Incorporate Elements Shown in Valencell 122

3. Claims 6, 14, and 23 126

I. INTRODUCTION

A. Engagement

1. I have been retained by counsel for Apple Inc. as an expert witness in the above-captioned proceeding. I have been asked to provide an opinion regarding the patentability of certain claims in U.S. Patent No. 10,517,484 ("the '484 patent") (Ex.1001). The face of the patent identifies Omni MedSci, Inc. ("Omni") as the assignee. I have been asked to provide a discussion of the meaning of certain words and phrases in the claims of the '484 patent, to provide a description of the state of the art of the technology described in the '484 patent, to analyze the disclosure of the '484 patent and the applications to which it claims priority, and to analyze various references that I understand are prior art to this patent.

B. Background and Qualifications

2. As indicated in my curriculum vitae ("CV"), Ex.1053, I am currently a Principal Research Scientist at the Massachusetts Institute of Technology ("MIT"). My CV includes additional information about my professional history and contains further details on my experience, publications, patents, and other qualifications to render an expert opinion. Below, I highlight some of my experience that is relevant to the technology of the patent at issue.

3. I earned a Bachelor of Science in Engineering from Carnegie Mellon University in 1994 and a Master's degree in Engineering from MIT in 1998. My

thesis topic related to anisotropic wave guides and acoustic non-destructive testing. In 2006, I earned my Ph.D. in Engineering from MIT. My research focused on high-performance computation, signal processing, and electro-mechanical system design.

4. In 1997, I co-founded Xcitex Inc., a company that specialized in video-acquisition and motion-analysis software. I served as the Chief Technology Officer and directed and managed product development until 2006. Our first demo product was an optical ring for human motion measurement used to capture user hand motion in order to control the user's interaction with a computer. Many of the structural elements of our optical ring addressed the same system issues as those described and claimed in the patent at issue. For example, our optical ring included multiple light emitting diodes, multiple photodetectors, techniques for modulation and synchronization, noise reduction algorithms, and optical components for light blocking, light redirection, and light capture, and structural components for holding and geometrically arranging the various components. We estimated human hand-motion based on how that motion changed the detected light. In our application we did not try to eliminate motion artifact, we tried to measure it. In developing our ring, we considered well-known problems such as ambient light and noise, which are, unsurprisingly, also mentioned in the patent at issue. Motion Integrated Data Acquisition System (MiDAS) was our flagship

video and data acquisition product which relied upon precise synchronization of multiple clocks for optical sensor and video acquisition, data acquisition, and external illumination.

5. I joined MIT in 2006 and was the Director of the Master of Engineering in Advance Manufacturing and Design Program for over ten years. The degree program covers four main components: Manufacturing Physics, Manufacturing Systems, Product Design, and Business Fundamentals. Many of the courses, projects, and papers my students undertake involve technologies relevant to the patent at issue, for example, sensor devices including non-invasive optical biosensors.

6. In 2011, I co-founded MIT's Medical Electronic Device Realization Center ("MEDRC") and currently serve as co-director. The MEDRC aims to create and deploy revolutionary medical technologies by collaborating with clinicians, the microelectronics, and medical devices industries. We combine expertise in computation; communications; optical, electrical, and ultrasound sensing technologies; and consumer electronics. We focus on the usability and productivity of medical devices using, for example, image and signal processing combined with intelligent computer systems to enhance practitioners' diagnostic intuition. Our research portfolio includes low power integrated circuits and systems, big data, micro electro-mechanical systems, bioelectronics, sensors, and

microfluidics. Specific areas of innovation include wearable, non-invasive and minimally invasive optical biosensor devices, medical imaging, laboratory instrumentation, and the data communication from these devices and instruments to healthcare providers and caregivers. My experience with these devices is directly applicable to the technology in the patent at issue. For example, in one current project related to this work, we use a patient-mounted mobile near infrared (NIR) camera to image and characterize the surface and subsurface structures of the skin.

7. I am the Associate Director of MIT.nano, MIT's new 200,000 sq-ft nanofabrication and characterization facility. One of the major research initiatives with MIT.nano focuses on sensors and sensing systems. Our research in sensing science and sensing engineering is targeting innovations in advanced manufacturing, healthcare, environmental remediation, smart infrastructure, and the creation of advanced machines and materials. I also co-founded the Center for Polymer Micro-fabrication at MIT. The Center’s research focuses on polymer-based manufacturing processes and the large-scale commercialization of micro fluidic devices for chemical, biomedical, and photonic applications. My experience under these initiatives is directly applicable to the technology in the patent at issue. We develop optical sensors to noninvasively monitor soft flexible materials during the manufacturing process.

8. Furthermore, my research focuses on computational instrumentation, including the development of instrumentation and measurement solutions for manufacturing systems and medical devices. Additionally, my teaching interests include the design and modeling of large-scale systems in a wide variety of decision-making domains and developing optimization algorithms and software for analyzing and designing such systems. I teach or have taught courses in Electrical Engineering, Controls, Optics, and Signal Processing, all pertinent subject matter to the patent at issue.

9. I have published approximately 85 papers, and have received a number of best paper and distinguished paper awards. I am a co-author of a number of papers that relate to the technology in the patent at issue.

C. Compensation

10. I am being compensated for my time at the rate of $500 per hour for my work in connection with this matter. I am being reimbursed for reasonable and customary expenses associated with my work in this investigation. This compensation is not dependent in any way on the contents of this Declaration, the substance of any further opinions or testimony that I may provide or the ultimate outcome of this matter.

D. Information Considered

11. My opinions are based on my years of education, research, and experience, as well as my investigation and study of relevant materials. In forming my opinions, I have considered the materials I identify in the attached Exhibit List.

12. I may rely upon these materials and/or additional materials to respond to arguments raised by Omni. I may also consider additional documents and information in forming any necessary opinions—including documents that may not yet have been identified by me or provided to me.

13. My analysis of the materials produced in this investigation is ongoing, and I will continue to review any new material as it is provided. This report represents only those opinions I have formed to date. I reserve the right to revise, supplement, and/or amend my opinions stated herein based on new information and on my continuing analysis of the materials already provided.

II. LEGAL STANDARDS FOR PATENTABILITY

14. Certain basic legal principles have been explained to me by counsel for Apple. Below, I have recorded these legal standards as they were explained to me.

15. I understand that for an invention claimed in a patent to be found patentable, it must be, among other things, new and not obvious from what was known before the invention was made.

16. I understand the information that is used to evaluate whether an invention is new and not obvious is generally referred to as "prior art" and can include patents and printed publications. I also understand that a patent will be prior art if it was filed before the earliest effective filing date of the claimed invention, while a printed publication will be prior art if it was publicly available before that date. I understand that in this proceeding, the information that may be evaluated to show unpatentability is limited to patents and printed publications.

17. I understand that the effective filing date of the claimed invention is the actual filing date of the claims, unless the applicant claims priority to an earlier filed application that supports the claimed subject matter in the manner required by 35 U.S.C. § 112. I understand that this section requires the patent's specification to contain a sufficient written description of the claimed invention to demonstrate that the applicant actually possessed the invention as of the filing date as broadly as it is claimed. In considering whether this written description requirement is met, I understand that I should consider the written description from the viewpoint of a person of ordinary skill in the art. I also understand that I should consider whether this person of ordinary skill would have recognized that the written description describes the full scope of the claimed invention and that the inventor actually possessed that full scope as of the claimed effective filing date.

18. I understand that in this proceeding Apple has the burden of proving that the challenged claims are unpatentable over the prior art by a preponderance of the evidence. I understand that "a preponderance of the evidence" is evidence sufficient to show that a fact is more likely true than it is not.

19. I understand that there are two ways in which prior art may render a patent claim unpatentable. First, the prior art can be shown to "anticipate" the claim. Second, the prior art can be shown to have made the claim "obvious" to a person of ordinary skill in the art.

A. Anticipation

20. I understand that, for a patent claim to be "anticipated" by the prior art, each and every requirement of the claim must be found, expressly or inherently, in a single prior art reference as recited in the claim.

21. I understand that claim limitations that are not expressly described in a prior art reference may still be there if they are "inherent" to the thing or process being described in the prior art.

22. I understand that it can be acceptable to consider evidence other than the information in a particular prior art document to determine if a feature is necessarily present in or inherently described by that document.

23. I understand that if a reference incorporates other documents by reference, the incorporating reference and the incorporated reference(s) should be treated as a single prior art reference for purposes of analyzing anticipation.

24. I understand that to be anticipatory, a reference must not only explicitly or inherently disclose every claimed feature, but those features must also be "arranged as in the claim." Differences between the prior art reference and a claimed invention, however slight, invoke the question of obviousness, not anticipation.

B. Obviousness

25. I understand that a claimed invention is not patentable if it would have been obvious to a person of ordinary skill in the field of the invention at the time the invention was made. I understand that in determining whether a patent claim is obvious, one must consider the following four factors: (i) the scope and content of the prior art, (ii) the differences between the prior art and the claims at issue, (iii) the knowledge of a person of ordinary skill in the pertinent art; and (iv) objective factors indicating obviousness or non-obviousness, if present (such as commercial success or industry praise).

26. I understand the objective factors indicating obviousness or non-obviousness may include: commercial success of products covered by the patent claims; a long-felt need for the invention; failed attempts by others to make the

invention; copying of the invention by others in the field; unexpected results achieved by the invention; praise of the invention by those in the field; the taking of licenses under the patent by others; expressions of surprise by experts and those skilled in the art at the making of the invention; and the patentee proceeded contrary to the accepted wisdom of the prior art. I also understand that any of this evidence must be specifically connected to the invention rather than being associated with the prior art or with marketing or other efforts to promote an invention. I am not presently aware of any evidence of "objective factors" suggesting the claimed methods are not obvious, and reserve my right to address any such evidence if it is identified in the future.

27. In addition, I understand that the obviousness inquiry should not be done in hindsight, but must be done using the perspective of a person of ordinary skill in the relevant art as of the effective filing date of the patent claim.

28. I understand that the Supreme Court has rejected a rigid approach to determining the question of obviousness, such as one that requires a challenger to identify a "teaching, suggestion, or motivation to combine" known elements. Instead, a challenger needs to articulate reasoning for combining known elements. Such reasoning can be based on design considerations, market demands, looking to solutions to related problems in related fields, and on the "ordinary innovation" and creativity that would be applied by a person of ordinary skill in the art.

29. I understand that an invention that might be considered an obvious variation or modification of the prior art may be considered non-obvious if one or more prior art references discourages or leads away from the line of inquiry disclosed in the reference(s). A reference does not "teach away" from an invention simply because the reference suggests that another embodiment of the invention is better or preferred. My understanding of the doctrine of teaching away requires a clear indication that the combination should not be attempted (*e.g.*, because it would not work or explicit statements saying the combination should not be made).

III. BACKGROUND INFORMATION ABOUT THE '484 PATENT

A. The Prosecution History of the '484 Patent

30. I have reviewed the file history of the '484 patent (Exhibit 1002). Before the application was examined, the applicant submitted several Information disclosure statements (IDS) that included several hundred references. Ex.1002, 1-360. The examiner allowed the patent after a preliminary amendment that added several limitations to independent claims 1, 7, and 15 along with dependent claims 4, 6, 11, 12, 14, 21, and 23. *Id.*, 607-612. On August 19, 2019, the examiner issued a notice of allowance stating that the prior art does not teach several limitations. *Id.*, 631, 634-635. Those limitations were:

> the wearable device further comprising a detection system configured to receive at least a portion of the lens output light output reflected from the tissue and to generate an output signal having a

signal-to-noise ratio, wherein the detection system is configured to be synchronized to the light source;

a cloud configured to receive over the wireless transmission link an output status comprising the at least a portion of the processed output signal, to process the received output status to generate processed data, and to store the processed data;

wherein the output signal is indicative of one or more of the physiological parameters, and the cloud is configured to store a history of at least a portion of the one or more physiological parameters over a specified period of time;

the wearable device configured to increase the signal-to-noise ratio by increasing light intensity of at least one of the plurality of semiconductor sources from an initial light intensity and by increasing a pulse rate of at least one of the plurality of semiconductor sources from an initial pulse rate; and

the detection system further configured to:
generate a first signal responsive to light received while the light emitting diodes are off, generate a second signal responsive to light received while at least one of the light emitting diodes is on, and increase the signal-to-noise ratio by comparing the first signal and the second signal." *Id.*

31. On August 23, 2019, the applicant amended claims 1, 7, and 15 as well as dependent claims 4, 6, 11, 12, 14, 21 and 23. Ex.1002, 1203-1209. On

October 8, the examiner entered this amendment without explanation. *Id.*, 1214-1215.

B. IPR2019-00916 Involving U.S. Patent No. 9,651,533

32. I submitted a declaration in IPR2019-00916 concerning US Patent No. 9,651,533 (the "'533 patent"). Both the '533 claims and '484 patents claims share many of the same limitations. In my previous declaration, and like this one, I relied on Lisogurski (Ex. 1011) and Carlson (Ex. 1009) to show that the '533 claims were obvious. I understand the PTAB has issued a final written decision finding that the challenged '533 claims are unpatentable.

C. Technical Field

33. The '484 patent generally relates to optical sensors and devices that use optical sensors for measurement of physiological signals or biological parameters.

D. Level of Ordinary Skill in the Art

34. I have been instructed that the claims of a patent are to be reviewed from the point of view of a hypothetical person of ordinary skill in the art at the time of the filing of the patent.

35. Based on my knowledge and experience, it is my opinion that a person of ordinary skill in the art ("skilled person") at the relevant time frame would have been a person with a good working knowledge of optical sensing techniques and their applications, and some familiarity with optical system design

and signal processing techniques. That knowledge would have been gained via an undergraduate education in engineering (electrical, mechanical, biomedical or optical) or a related field of study, along with relevant experience in studying or developing physiological monitoring devices (e.g., non-invasive optical biosensors) in industry or academia. This description is approximate; varying combinations of education and practical experience also would be sufficient.

36. Well before December 2012, my level of skill in the art was at least that of a person of ordinary skill in the art in the field of the ’484 patent, as discussed above. I am qualified to provide opinions concerning what a person of ordinary skill in the art would have known and understood at that time. In preparing this declaration, I have considered the issues from the perspective of a hypothetical person of ordinary skill in the art at the relevant timeframe.

IV. TECHNICAL BACKGROUND

A. Photoplethysmography

37. The use of optical sensors to detect physiological parameters, including photoplethysmography, has been known for decades. Optical techniques are commonly used in medical monitoring systems such as pulse oximetry systems that measure a person’s pulse rate and blood oxygen saturation. Ex.1019 (BE Handbook) at 769-76, 1346-55 (discussing oximetry and other applications).

38. Photoplethysmography works by directing light into a person's tissue and measuring the light that is reflected back from or transmitted through the tissue. Ex.1019 (BE Handbook) at 764. Different components of blood or tissue absorb different wavelengths of light. By measuring how much light is absorbed by the tissue and how the absorption changes over time, a device can calculate parameters that are related to the properties of the tissue and blood.

39. For example, hemoglobin (the protein molecule in blood that carries oxygen to cells) reflects more red light when it is more oxygenated than when it is deoxygenated; it absorbs more red light when it is deoxygenated. Ex.1019 (BE Handbook) at 769. Hemoglobin reflects the same amount of infrared (IR) light whether oxygenated or deoxygenated. Ex.1019 (BE Handbook) at 769. If a device measures the absorbed red and IR light multiple times per second, the device can determine several things: (i) the ratio of oxygenated to deoxygenated hemoglobin (oxygen saturation), and (ii) how the volume of blood in the tissue changes, allowing detection of a person's pulse. Ex.1019 (BE Handbook) at 769, 771.

40. Photoplethysmography is an optical technique, and it uses basic optical components or building blocks. The "basic building blocks" of optical sensor systems include lenses, mirrors, reflective surfaces, filters, beam splitters, light sources, fiber optics, light detectors, and other passive components and

various active components to convert light signals to electrical signals. Ex.1019 (BE Handbook) at 765.

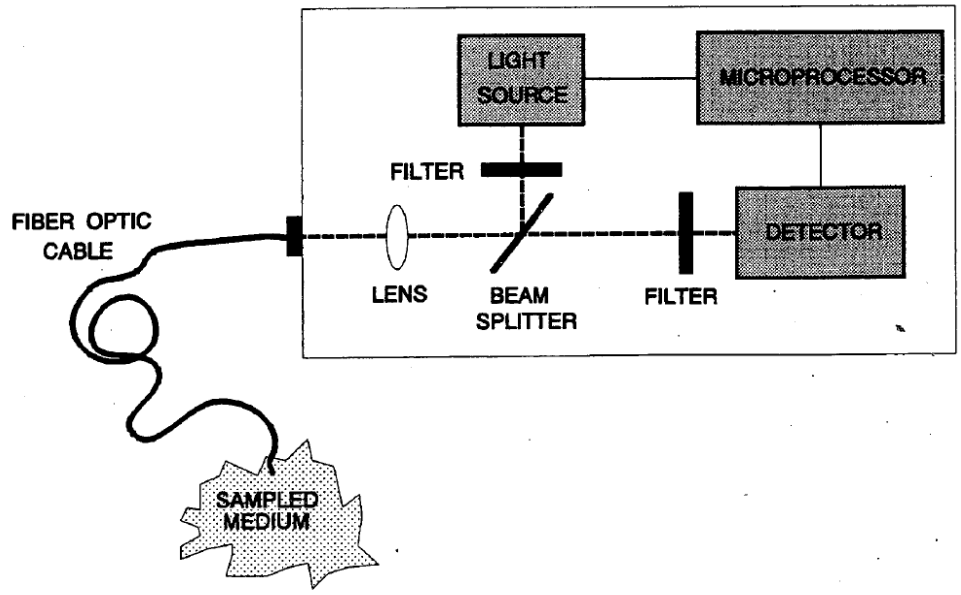

FIGURE 52.1 General diagram representing the basic building blocks of an optical instrument for optical sensor applications.

Ex.1019 (BE Handbook) at 765. In portable devices, the light sources are typically light emitting diodes (LEDs) because they are small and have low power requirements. Ex.1019 (BE Handbook) at 765. LEDs are manufactured with a wide range of packaged form factors and are easily assembled into systems with standard circuit board assembly processes; surface mount technology (SMT) is widely used to mount the LED packages for practical application.

41. The light from the light sources is directed through a lens and onto and into a sample. Ex.1019 (BE Handbook) at 765. The sample, or tissue, reflects back the light, which is filtered and sensed by a photodetector. Ex.1019 (BE

Handbook) at 765. The photodetector outputs a signal proportional to the measured light intensity, which is the measurable amount of light (number of photons), and then analog-to-digital conversion and signal processing are performed to extract data. Ex.1019 (BE Handbook) at 766.

42. Photodetectors are devices used for the detection of light and conversion into an electrical signal. There are many types of photodetectors which may be appropriate in a particular case. Depending on the application, design intent and design constraints, a photodetector and photodetector-based measurement system has to satisfy various requirements. For example, it must be sensitive in (be able to detect) some given spectral region (range of optical wavelengths). The detector must be suitable for some range of optical powers. The active area of a detector can be important, *e.g.*, divergent or scattered light may require larger active areas. For detecting pulses of light, the timing precision may be of interest so that the photodetector is aware of the timing of when the pulses of light are triggered. After detection of a pulse, some detectors may have a "dead time" during which they are not active. The pulses of light and the detection of pulses of light are synchronized by operating from a common clock, and therefore have a common time base, or may operate from different clocks and are then synchronized based on knowledge of the characteristics or nature of the timing of transmitted light with various techniques, phase-locked (lock-in)

amplifiers being one example. It was also common to perform a spectral analysis of signals captured by sensors, and the "traditional method of frequency analysis [is] based on the Fourier transform." Ex.1019, 846-47.

43. Different types of detectors and uses of detectors in applications require more or less complex electronics. Trade-offs in terms of size, cost, and complexity will result. The size, robustness and cost are essential for many applications. Photodiodes are semiconductor devices with a p–n junction or p–i–n structure ("p" (positive) side contains an excess of holes, while the "n" (negative) side contains an excess of electrons "i" is the intrinsic material), where light is absorbed in a depletion region and generates a photocurrent. Such devices can be very compact, fast, highly linear, and possess high quantum efficiency (generate nearly one electron per incident photon) and a high dynamic range, provided that they are operated in combination with suitable electronics. Phototransistors are similar to photodiodes but exploit internal amplification of the photocurrent. Photoresistors are also based on certain semiconductors. They are cheaper than photodiodes, but they are generally slower, not as sensitive, and exhibit a strongly nonlinear response.

44. The detected signal may include signal and noise from, for example, ambient light or motion induced artifacts. There are various well-known techniques used to reduce the amount of noise in the detected signal and improve

the signal-to-noise ratio. For example, the light source is often modulated with some known periodicity which improves signal detectability and therefore improves signal-to-noise ratio. Ex.1019 (BE Handbook) at 764. The detector uses synchronized lock-in amplifier detection to isolate signals that occur at the modulation frequency to improve signal-to-noise ratio by extracting information encoded at the modulation frequency thereby reducing the impact of noise at other frequencies in the detected signal. Ex.1019 (BE Handbook) at 766. Another common method for reducing noise or extracting information from a signal captured by sensors involved calculating and processing the spectral content, or frequency-domain representation, of the signals. The "traditional method of frequency analysis [is] based on the Fourier transform" such as a fast Fourier transform (FFT) to determine a signal's spectral, or frequency-domain, components. Ex.1019 (BE Handbook) at 846-47.

45. Modulation, with some known periodicity or temporal variation, is a standard technique to enhance the detectability of signal in noise. Ex.1019 (BE Handbook) at 764. The goal is to encode and then detect or extract the information in the modulated signal. A receiver receives the modulated signal, which is composed of carrier and information signals, then detects or extracts the information from the modulated signal components. This is called demodulation. How information is detected depends on the modulation techniques used.

Examples of analog modulation techniques include amplitude modulation (AM) and frequency modulation (FM). A lock-in amplifier is a type of amplifier that can extract a signal with an a priori known or detected carrier frequency from an extremely noisy environment. Pulsed and digital modulation techniques include amplitude-shift keying (ASK), frequency-shift keying (FSK), and phase-shift keying (PSK). Each modulation technique has its own pros and cons and needs to be considered in context of an entire measurement system. Different modulation schemes can be used to simultaneously transmit information from multiple transmitters through a single physical medium (e.g. wire, space, water, tissue). Frequency division multiplexing (FDM) is a technique for sending two or more signals over the same telephone line, radio channel, or other medium. The signal associated with separate information channel is transmitted as a unique range of frequencies within the broader frequency bandwidth of the physical channel as a whole, enabling several lines of communication to be transmitted simultaneously. Time-division multiplexing (TDM) is a technique of transmitting and receiving independent signals over a common signal path by means of synchronized switches. Each signal appears on the line only a fraction of time in an alternating pattern. Code division multiplexing (CDM) is a multiplexing technique that uses spread spectrum communication. In spread spectrum communications, a narrowband signal is spread over a larger band of frequency or across multiple

channels. In Code Division Multiple Access (CDMA), each transmitter or information channel is given a unique code and individual conversations are encoded in a digital sequence.

46. LED packages are typically molded with polymer plastic materials. *See generally* Ex.1035 (Light Emitting Diodes) at 97-98, 191-99. Encapsulants and lens materials of LEDs are of high transparency, high refractive index, chemical stability, high temperature stability, and hermeticity to enhance the extraction of light into free space as well as reliability performance. A lens is an optical element (or optical components) that focuses or otherwise modifies the direction of propagation of light. A lens is often a transparent material with curved surfaces for concentrating or dispersing light rays. High power LEDs may use a plastic lens as well as an encapsulant. Silicone retains mechanical softness in its cured state, the silicone encapsulant is enclosed in a plastic cover that serves as a lens to give mechanical protection. The plastic lenses control the angular projection and direction of the light cone from the LEDs into the next optical component of an optics system or into free space.

47. Components such as mirrors, beam splitters, and optical fibers are used to control and change the direction of light paths or to split light sources into multiple paths and can be used to create references for relative measurements.

B. Industry Trends

48. In the 2000 to 2012 time-frame, several market trends were pushing the medical device and semiconductor industries to develop wearable sensor devices that could communicate data to remote devices. During that time, there was a push to develop remote monitoring technology to allow more cost-effective and widespread medical care to be provided to remote populations or for monitoring in the home environment. Ex.1021 (Patel) at 2; Ex.1024 (BLE) at 462; Ex.1027 (EU Report) at 15-31. Along with advances in the miniaturization of electronics and in communication technology, these trends led to the development of many remote, wearable monitoring systems. Ex.1021 (Patel) at 3.

49. During that time frame, there was also a push to bring heart rate sensing devices to consumers for personal fitness tracking and other wellness related uses. Ex.1009 (Carlson), [0004] ("Pulsoximetry measuring devices are also used in sports for control and survey of athletes."); Ex.1005 (Valencell '093), [0003] ("There is growing market demand for personal health and environmental monitors, for example, for gauging overall health, fitness, metabolism, and vital status during exercise, athletic training, work, public safety activities, dieting, daily life activities, sickness, and physical therapy."); Ex.1020 (FitnessCoach) at 3 ("A multitude of commercial health devices and sensors, such as oximeters and heart rate monitors, formerly reserved for professional use, are now available and can be

connected to smartphones. GPS watches, pedometers and heart rate monitors….”); Ex.1027 (EU Report) at 33 (“For many sport enthusiasts measuring body functions and storing the results of sports activities has become integrative part of their training. Emerging social computing communities and web 2.0 now enable people engaging in different sports to exchange their experiences, tips and warnings.”), Ex.1027 at 35; Ex.1029 (Sensor Mania) at 221 (“Wristband sensors are a predecessor to smartwatches and remain a successful product category on their own…. Current examples… feature accelerometry and include the Nike Fuelband ($149, monitoring steps taken), the Jawbone UP wristband and iPhone app ($99, tracking steps taken, distance, calories burned, pace, intensity level, active versus inactive time, and GPS), the Adidas MiCoach ($70, providing heart rate monitoring, real time digital coaching, interactive training, and post-workout analysis of pace, distance, and stride rate)… Other sensor platforms also focus on fitness and athletic training…”).

50. This includes systems which monitor heart rate changes resulting from athletic activity and non-athletic activity and provides information based on the monitored activity. Such systems may be used to encourage individuals to participate, for example, in athletic activities to improve their overall fitness levels. This is accomplished by using activity monitoring techniques that provide incentives and social, or individual goal, oriented motivation for users to engage in

athletic activities. Such "activity monitoring environments" may be customized based on factors derived from a user's behavior, and athletic activity, and are used to improve the user's performance. Ex.1031 (Hoffman), Abstract, Fig. 13, [0069]-[0073]; Ex.1032 (Hjelt), Fig. 3, 2:54-3:5, 7:18-8:33. Accordingly, there was a general motivation in the field to integrate medical optical sensing techniques into wearable and mobile consumer devices for fitness, wellness, and health uses.

51. The above trends and the advances in the miniaturization of electronics and communication technology led to the development of many wearable monitoring systems for mobile and fitness applications. Ex.1021 (Patel) at 3; Ex.1022, 1; Ex.1020 (FitnessCoach) at 2 ("Advances in the miniaturization of (inertial) sensing technology, along with the increasing availability of smartphones as a sensing platform, have given rise to many commercial appliances, apps, and general academic interest into people's physical activity.").

52. The continued and rapid development of mobile phone and computing technology over this same period allowed mobile wearable device technology to be rapidly developed and deployed. Ex.1021 (Patel) at 4; *see also* Ex.1023 (Adil) at 5 (One of "the biggest usage of tablets stems from… Patient monitoring and data collection…, includ[ing] using the Bluetooth enabled sensor devices and Wi-Fi+ Bluetooth enabled interfaces to patient monitoring devices, to medical instruments that can transmit information to the tablet when in the vicinity."); Ex.1027 (EU

Report) at 41. The global market trend in the medical industry was to use apps and smartphones to deliver care. Ex.1027 (EU Report) at 9-10, 40-49; Ex.1023 (Adil) at 1-2 ("Doctors and nurses were the early adopters of tablets"). It also led to the prevalent use of cloud-based data transfer and storage of data. Accordingly, there was a general motivation in the field to design wearable devices that interface with smartphones and tablets.

53. The architecture, and vendor or application specific variations, of these sports and remote/mobile monitoring systems was well-known by 2012. An example of the architecture is depicted below:

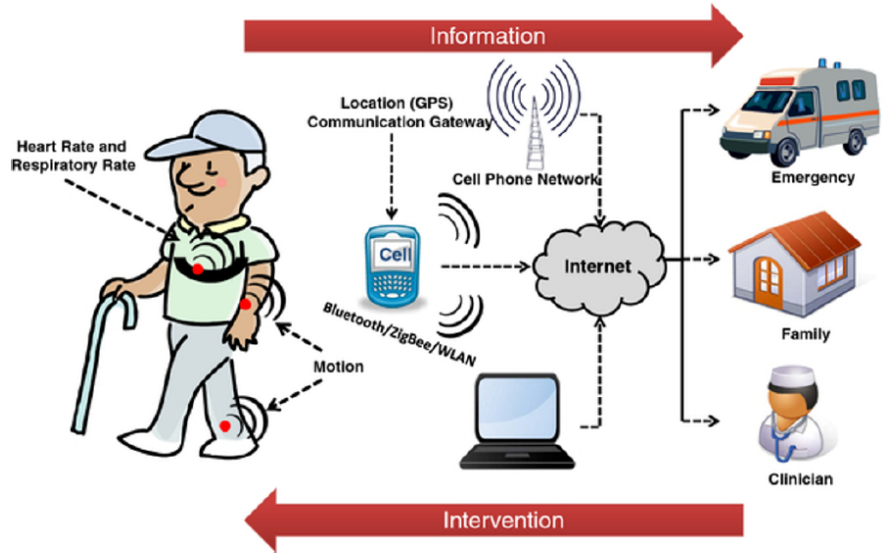

Figure 1 Illustration of a remote health monitoring system based on wearable sensors. Health related information is gathered via body-worn wireless sensors and transmitted to the caregiver via an information gateway such as a mobile phone. Caregivers can use this information to implement interventions as needed.

Ex.1021 (Patel) at 2. Data from wearable sensors are transmitted to a cellphone (or another mobile device worn or kept close to the individual). On the cell phone or mobile device, the data may be processed or preprocessed with the intent of

filtering out noise, reducing data size via compression or processed with the intent of feature extraction or identification. The cell phone or mobile device in turn transmits the raw or processed data, along with GPS information over the internet (or other communication medium) to remote devices, such as another computer on the network for further data analysis (*e.g.*, further extraction of features of the data, comparing those features to trends for the individual or comparing features of the data to norms for a population of similar individuals). Such remote network/internet connected devices are used to review the data by either a clinician, family member, or emergency care provider. The data is also shown being transmitted to and stored in the cloud. Ex.1021 (Patel) at 4.

54. Another example of known architecture for sports and remote/mobile monitoring systems is shown below:

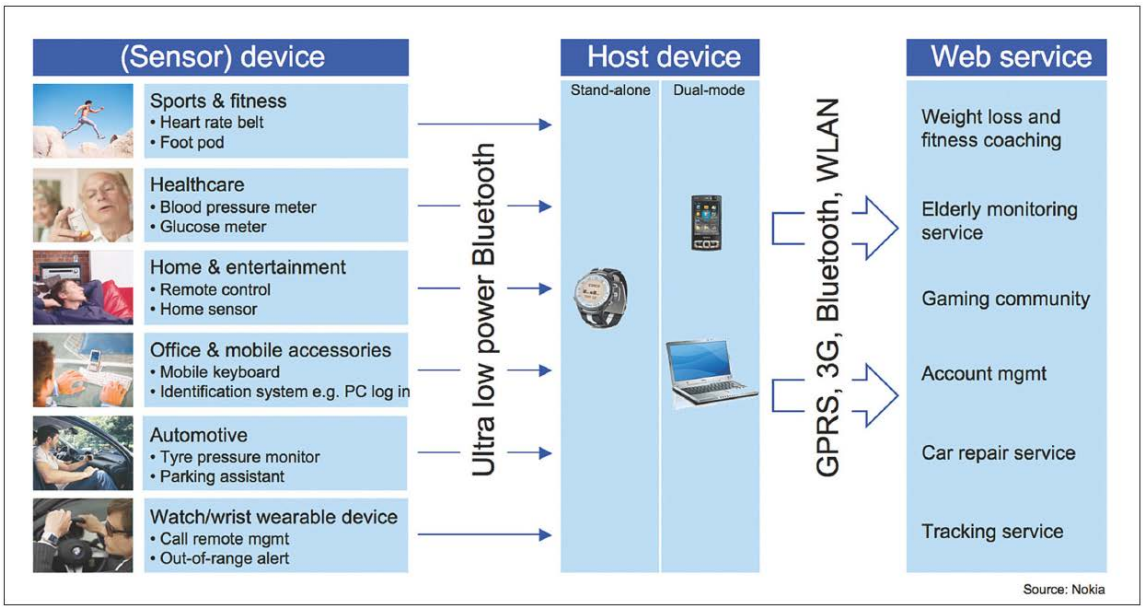

Figure 2. Bluetooth low energy will extend interoperable wireless connectivity to coin-cell-powered wireless sensors in health care, fitness, and related sectors. WLAN, wireless local area network; GPRS, general packet radio service.

Ex.1024 (BLE) at 460. In this set up, the medical data can be sent from a wireless sensor device to a host device (*e.g.*, smart phone or computer) and then to a remote service (*e.g.*, physician). Ex.1024 (BLE) at 459.

55. Another example of known architecture implemented for a fitness application is shown below:

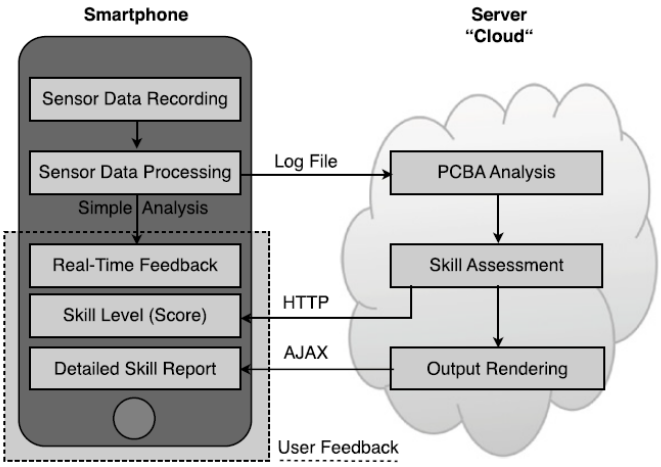

(a) Iteration 1: the smartphone records sensor data during exercising, which are processed by a server after the training to generate skill assessment.

Ex.1020 (Fitness Coach) at 7. A smartphone records and processes sensor data and sends the raw or processed data to a cloud server for further processing. The cloud server then returns the processed data back to the smartphone, which displays the data, and extracted information, to the user. Ex.1020 (Fitness Coach) at 7; Ex.1020 (Fitness Coach) at 6 ("The logged information is sent to a server, where the automatic analysis is performed… [to determine] the user's skill. The calculated skill level sent back to the mobile phone."); Ex.1020 (Fitness Coach) at 12 ("GymSkill is a representative example for future mobile interactive

applications that incorporate activity recognition…”). It was known in the art that this type of system could be used with heart rate monitors and optical sensors. Ex.1020 (Fitness Coach) at 12 (“Coupling with devices like heart rate monitors using e.g. ANT+ further would increase the sensed database and allow for further, more detailed physical and physiological assessments.”).

56. This same basic architecture had been known for decades. For example, a 1995 textbook depicted a similar architecture for a remote monitoring system based on wired technology:

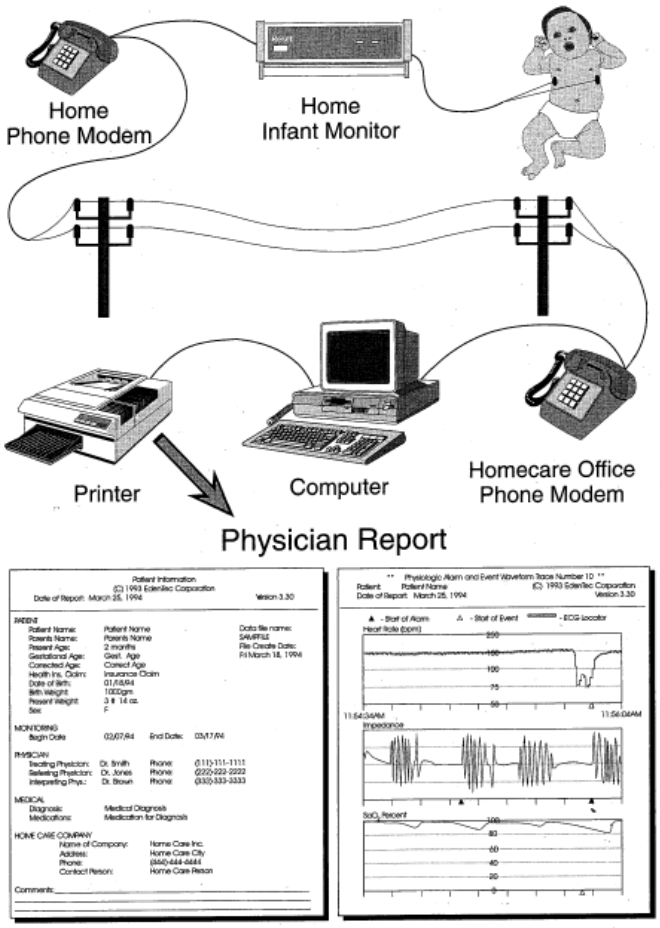

FIGURE 89.3 Infant apnea monitor with memory allows data to be sent by modem to generate physician report (drawing courtesy of EdenTec Corporation).

Ex.1019 (BE Handbook) at 1363. Similar to the wireless version, in this system, data from a worn sensor is transmitted to a monitoring instrument (*e.g.*, home infant monitor). The monitoring instrument may process or pre-process the received data with the intent of filtering out noise, reducing data size via compression or with the intent of feature extraction or identification. The monitoring instrument transmits the raw or processed data over the wired network to another computer on the network for further data analysis, for example, further extraction of features of the data, comparing those features to trends for the individual or comparing features of the data to norms for a population of similar individuals. The user interfaces and displays of the remote computer (or a printed report printed from a printer connected to the remote computer) are used to review the received data.

V. ANALYSIS OF THE ’484 PATENT

A. Overview of the ’484 Patent

57. The ’484 patent generally describes optical sensors and systems for using such sensors (for measurement of chemical properties or physiological signals). The challenged ’484 claims recite known features of prior art optical sensor systems, such as photoplethysmography systems and combine those features in known configurations.

58. The ’484 specification provides little description of the claimed elements. For example, the specification uses the term “synchronized”, but it does not explain what those terms mean or how to implement such functionality. Ex.1001, 16:65-17:6. These concepts were well-known to those of skill in the art at the time, and these terms are not used in a manner inconsistent with the understanding of a person of ordinary skill.

B. Construction of Terms Used in the ’484 Patent Claims

59. I understand that the parties have agreed in a district court proceeding involving related patents that all of the terms in the asserted claims, except for one, should be given their plain and ordinary meaning to a person of ordinary skill in the art. I understand that the plain and ordinary meaning should be determined in the context of the intrinsic record of the patent, including the claims, specification and the prosecution history, as well as any relevant extrinsic evidence of record. I also understand that when a patent applicant provides an explicit definition of a claim term in the specification, that definition may control the interpretation of that term in the claim.

60. I have been informed that in the litigations, the parties disagreed over the meaning of a similar claim term (“a plurality of lenses”) for a related patent, and that the district court has provided final constructions for this term. I note the

constructions proposed by each party, along with the district court's final construction in the table below.

"*one or more lenses*"	**Apple**: a plurality of transparent surfaces used to collimate (make parallel) or focus rays of light.
	Omni: No construction needed. Plain and ordinary meaning.
	District Court: Plain and ordinary meaning. Reject "used to collimate (make parallel) or focus rays of light." Reject that a lens can be other than transparent.

61. In a related IPR proceeding, IPR2016-00916, I understand that the Board, Omni, and Apple construed the following terms that also appear (or similar such limitations appear) in the '484 patent.

"*a light source comprising a plurality of semiconductor sources that are light emitting diodes . . . configured to increase signal-to-noise ratio by . . . increasing a pulse rate of at least one of the plurality of semiconductor sources*"	**PTAB:** A light source containing two or more light emitting diodes (semiconductor sources), wherein at least one of the light emitting diodes is capable of having its pulse rate increased to increase a signal-to-noise ratio
	Omni: a light source, containing two or more light emitting diodes (semiconductor sources), where the light source is configured to increase

	the pulse rate of at least one of the light emitting diodes to increase signal-to-noise ratio.
	Apple: plain and ordinary meaning

62. For the purposes of this IPR, I have applied the district court's and PTAB's constructions of the claims, and those are the definitions I use in this declaration when comparing the prior art to the claims. I have also considered the prior art in light of definitions offered by Omni and by Apple, and it is my opinion that the prior art discloses the claim terms above regardless of which definition is used.

63. In addition to the terms above, I have been informed that Apple has proposed constructions of two terms.

64. I have been informed that Apple has proposed a construction of "*optical light*" to mean "photons or light transmitted to a particular location in space." This construction is consistent with the intrinsic evidence. The claim term "*optical light*" is expressly defined in the specification of the '484 patent: "As used throughout this disclosure, the terms 'optical light' and or 'optical beam' and or 'light beam' refer to photons or light transmitted to a particular location in space." Ex.1001, 10:43-45. Based on this disclosure, a skilled artisan would have

understood "*optical light*" to mean "photons or light transmitted to a particular location in space" in the context of the '484 patent.

65. I understand that Apple has proposed that "*cloud*" be given its plain and ordinary meaning, which is a remote device (or network of devices) hosted on a network and used to store, manage, or process data. The '484 patent does not define "cloud." Without any specific definition, a skilled artisan would have understood this term's plain and ordinary meaning, which is a remote device (or network of devices) hosted on a network and used to store, manage, or process data.

VI. IDENTIFICATION OF THE PRIOR ART

66. ***Exhibit 1005 ("Valencell '093")*** is a copy of U.S. Patent Publication No. 2012/0197093 titled "Apparatus and Methods for Monitoring Physiological Data During Environmental Interference." It was filed on January 25, 2012, and published on August 2, 2012. I understand it is prior art to the challenged claims.

67. ***Exhibit 1011 ("Lisogurski")*** is a copy of U.S. Patent No. 9,241,676 titled "Methods and Systems for Power Optimization in a Medical Device." Lisogurski was filed on May 31, 2012 and issued on January 26, 2016. I understand it is prior art to the challenged claims.

68. ***Exhibit 1009 ("Carlson")*** is a copy of U.S. Patent Pub. No. 2005/0049468, titled "Increasing the Performance of an Optical Pulsoximeter."

Carlson was published on March 3, 2005. I understand it is prior art to the challenged claims.

69. ***Exhibit 1063 ("Isaacson")*** is a U.S. Patent No. 8,725,226, titled "Optical Sensor Path Selection," Isaacson was filed on November 13, 2009 and issued on May 13, 2014. I understand it is prior art to the challenged claims

70. ***Exhibit 1064 ("Tran")*** is a copy of U.S. Patent No. 8,108,036, titled "Mesh Network Stroke Monitoring Appliance." Tran was filed on June 18, 2009 and issued on January 31, 2012. I understand it is prior art to the challenged claims.

VII. ANALYSIS OF THE PRIOR ART AND '484 CLAIMS

A. Lisogurski and Carlson Render Obvious Claims 1, 7, 15, and 17

1. Overview of Lisogurski

71. Lisogurski describes a portable physiological monitoring system that uses an optical sensor to measure a person's pulse rate and oxygen saturation. Ex.1011 (Lisogurski) at 3:66-4:5. The system includes a sensor, a monitor, and remote devices such as a server. Ex.1011 (Lisogurski) at 11:28-32, 15:43-48.

72. Lisogurski explains that the sensor can be worn in various locations, such as on a fingertip, toe, forehead or earlobe, or in the case of a neonate, across a foot, Ex.1011 (Lisogurski) at 4:6-8, or also at the neck, wrist, ankle. Ex.1011 (Lisogurski) at 4:15-20. Lisogurski explains that some locations may be more suitable for pulse pressure measurement and others may be more suitable for

oxygen saturation measurement. A person of ordinary skill in the art would understand that different body locations may require different form factors with modifications to the size, geometrical arrange of components yet the principal of operation would remain the same. Locations that are typically exposed such as the face would require different mounting, structural and aesthetics considerations than a location that is typically covered. Different locations on the body experience different patterns and magnitudes of motion and would also require different amounts of noise rejection or motion rejection yet the principal of operation would remain the same.

73. The sensor can include several light emitting diodes (LEDs) and photodetectors. Ex.1011 (Lisogurski) at 17:37-45, 10:48-63, 11:9-13. A person of ordinary skill in the art would understand the value of include several emitters and detectors for creating redundancy and therefore being more tolerant to faults or unexpected use, improving signal-to-noise ratio (SNR). Making measurement at several wavelengths further enable the ability that can extract properties as a function of wavelength. One of the LEDs uses infrared light with a wavelength between 800 nm and 1000 nm. Ex.1011 (Lisogurski) at 10:52-58.

74. Lisogurski explains that the brightness of the LEDs can be varied. This variation can be achieved by turning the lights on and off, or by making the LEDs brighter and then less bright. (e.g., by varying the amplitude of their power

source or by varying the duty-cycle of the power source). Ex.1011 (Lisogurski) at 7:38-40, 8:27-45, 12:23-41. Lisogurski describes a light drive signal, which is the electric current provided to the LEDs that turns them on and determines their brightness. Ex.1011 (Lisogurski), 11:38-41, 11:50-54, 25:52-55. For a particular LED, the emitted light intensity increases as a higher current is applied.

75. The light is passed into a person's tissue, reflected by or transmitted through it, and then detected by a detector, which applies signal processing techniques to isolate the signal.

76. Lisogurski explains that the light drive parameters (*e.g.*, brightness, duty cycle, firing rate) can be varied to adapt to changes in the environment, which allows the signal-to-noise ratio of the device to be increased when interference is encountered. Ex.1011 (Lisogurski) at 5:55-61, 9:46-52, 27:44-49. For example, Lisogurski describes several modulation schemes that can be used to vary these parameters. Ex.1011 (Lisogurski) at 5:25-6:9.

77. A control algorithm may adjust drive signal brightness, to compensate for ambient light variation, at a rate on a time scale of the order of seconds. Ex.1011 (Lisogurski) at 5:55-67. It may be beneficial to acquire more measurements in a period of time in order to implement an averaging scheme and to be less sensitive to high frequency motion artifact or changing ambient light, or to be more responsive if activity levels of the user increased.

78. The modulations of the light drive signal and the detector measurement sampling rate may be synchronized. The system may sample the received signal at a low rate during a period of low light output and at a high rate during a period of high light output or in a subset of this approach, may only sample when the light is high and not at all when low. Ex.1011 (Lisogurski) at 10:33-34.

2. Overview of Carlson

79. Carlson describes a wearable pulse oximeter that can be worn on parts of the human body, such as the ear, finger, or toe. Ex.1009 (Carlson), [0052], [0078]. The device uses a conventional sensor that emits optical wavelengths in the red (*e.g.*, 660 nm) and infrared (*e.g.*, 800 to 1000 nm) ranges and detects light that has been transmitted or reflected. Ex.1009 (Carlson), [0003], [0050], [0052]. The device is mobile and can wirelessly transmit data to a doctor or hospital. Ex.1009 (Carlson), [0072], [0077]-[0078].

80. Carlson notes that while sensors can be used in telemedicine, athletics, and other mobile applications, these standard sensors "suffer from signal instability and insufficient robustness versus environmental disturbances." Ex.1009 (Carlson), [0004]. Carlson states that it describes potential solutions to these issues, explaining various techniques for "increasing the technical performance of pulsoximetry in terms of quality and robustness of the measurement signal versus

environmental disturbances and energy consumption." Ex.1009 (Carlson), [0002]. For example, Carlson describes techniques for increasing signal-to-noise ratio to account for environmental conditions, such as sunlight, shadow, artificial light, etc. Ex.1009 (Carlson), [0010].

3. A Person of Ordinary Skill in the Art Would Have Modified Lisogurski to Incorporate Elements Shown in Carlson

81. A person of ordinary skill in the art would have considered making modifications to the systems described in Lisogurski based on Carlson.

82. Lisogurski describes a PPG system that is designed to optimize power consumption. Ex.1011 (Lisogurski) at 1:4-6, 3:50-53. Lisogurski's system allows "for increased battery life in portable systems or for increased portability." Ex.1011 (Lisogurski) at 1:16-18. For example, Lisogurski explains that its techniques could improve oximeter systems by reducing power requirements, which would allow for smaller devices or longer life. Ex.1011 (Lisogurski) at 4:63-67. Lisogurski describes several techniques for increasing the signal-to-noise ratio of the signals measured by its devices while minimizing power consumptions. Ex.1011 (Lisogurski) at 9:46-52, 14:50-55, 37:8-11.

83. Based on my knowledge and experience, a person of ordinary skill in the art reading Lisogurski would have considered other references that explained techniques for improving the operation of portable optical sensing systems,

particularly those with wearable sensors. Such a person would recognize that improvements to these systems involve trade-offs, such as adding a sensor component to improve detection could also increase the size of the device. It was part of the ordinary design process to characterize the positive and negative attributes of the many ways to improve the operation of a device by comparing and selecting or combining, different designs and techniques.

84. Based on my knowledge and experience, a person of ordinary skill in the art would have looked to Carlson, which is a reference that describes techniques for improving pulse oximetry devices by improving both signal measurement and energy consumption. Ex.1009 (Carlson), [0002]. These techniques include processes and structures for increasing the signal-to-noise ratio, even where optical conditions of the environment are changing. Ex.1009 (Carlson), [0010]. The techniques are energy efficient and can be used in devices that are battery-powered. Ex.1009 (Carlson), [0048]. Carlson explains that its techniques can be used in hospital devices used at and also mobile monitoring devices used in telemedicine. Ex.1009 (Carlson), [0004]. In addition, Carlson explains that the devices can be used to monitor athletes in sports applications. *Id*. Based on my knowledge and experience, it is my opinion that a person of ordinary skill in the art would have recognized the benefits described by Carlson, and these benefits would have motivated that person to include these same features in

Lisogurski's system. The quality of the measurement of a physiological parameter derives ultimately from the quality of the signal being analyzed. Consistent with the general knowledge in the field, Carlson explains that noise such as that from ambient light diminishes that signal quality.

85. Lisogurski and Carlson are analogous references, both describing techniques for improving the power consumption of portable and wearable optical sensing devices, such as pulse oximeters. *See* Ex.1011 (Lisogurski) at 4:15-20, 17:51-58 (describing improvements in a system that includes a wearable sensor, *e.g.*, one worn on a wrist); Ex.1009 (Carlson), [0048], [0052] (describing devices that can be worn, for example, on an earlobe or finger). Both references describe techniques for improving the power consumption of portable, wireless, and wearable optical sensing devices, such as pulse oximeters, while improving their performance (e.g., signal-to-noise ratio) and utility. Based on my knowledge and experience, it is my opinion that a person of ordinary skill in the art would have considered the references together when implementing Lisogurski's system.

86. As I explained in § IV.B, above, by 2012, there was a general trend in the industry to create wearable devices, to allow the device to be used in mobile monitoring systems or to allow the device to be used for sports and personal fitness applications. Thus, a person of ordinary skill in the art would have had reason to

look to analogous references to create wearable devices that performed better in mobile and consumer applications.

87. Therefore, a person of ordinary skill in the art would have been motivated to consider Lisogurski and Carlson together, and to include features from Carlson in Lisogurski's system. I describe these features, and more specific reasons for integrating them into Lisogurski, in my analyses below.

4. Lisogurski and Carlson Describe the Elements of Independent Claims 1, 7, and 15 of the '484 Patent

88. It is my opinion that Lisogurski in combination with Carlson renders claims 1, 7, and 15 obvious. Claim 1 (Ex.1001) is exemplary and reproduced below.

> 1. A system for measuring one or more physiological parameters and for use with a smart phone or tablet, the system comprising:
>
> a wearable device adapted to be placed on a wrist or an ear of a user, including a light source comprising a plurality of semiconductor sources that are light emitting diodes, each of the light emitting diodes configured to generate an output optical light having one or more optical wavelengths;
>
> the wearable device comprising one or more lenses configured to receive a portion of at least one of the output optical lights and to direct a lens output light to tissue;
>
> the wearable device further comprising a detection system configured to receive at least a portion of the lens output light reflected from the tissue and to generate an output signal having a signal-to-noise ratio, wherein the detection system is configured to be synchronized to the light source;

wherein the detection system comprises a plurality of spatially separated detectors, and wherein at least one analog to digital converter is coupled to at least one of the spatially separated detectors;

wherein a detector output from the at least one of the plurality of spatially separated detectors is coupled to an amplifier having a gain configured to improve detection sensitivity;

the smart phone or tablet comprising a wireless receiver, a wireless transmitter, a display, a speaker, a voice input module, one or more buttons or knobs, a microprocessor and a touch screen, the smart phone or tablet configured to receive and process at least a portion of the output signal, wherein the smart phone or tablet is configured to store and display the processed output signal, and wherein at least a portion of the processed output signal is configured to be transmitted over a wireless transmission link;

a cloud configured to receive over the wireless transmission link an output status comprising the at least a portion of the processed output signal, to process the received output status to generate processed data, and to store the processed data;

wherein the output signal is indicative of one or more of the physiological parameters, and the cloud is configured to store a history of at least a portion of the one or more physiological parameters over a specified period of time;

the wearable device configured to increase the signal-to-noise ratio by increasing light intensity of at least one of the plurality of semiconductor sources from an initial light intensity and by increasing a pulse rate of at least one of the plurality of semiconductor sources from an initial pulse rate; and

the detection system further configured to:

generate a first signal responsive to light received while the light emitting diodes are off,

generate a second signal responsive to light received while at least one of the light emitting diodes is on, and

increase the signal-to-noise ratio by comparing the first signal and the second signal.

a) Preamble

89. The preamble of claims 1, 7, and 15 specify "[*a*] *system for measuring one or more physiological parameters and for use with a smart phone or tablet*."

90. Lisogurski describes a sensor that may be worn on various portions of a person's body, including "a fingertip, toe, forehead or earlobe… additional suitable sensor locations include, without limitation…, the wrist to monitor radial artery pulsatile flow… and around or in front of the ear." Ex.1011 (Lisogurski), 4:6-20. The sensor is battery-powered and can communicate with the monitor over a wireless connection, which a person of ordinary skill in the art would understand means that the sensor is wearable and separate from the monitor. Ex.1011 (Lisogurski), 17:55-59 ("Sensor unit 312 may be powered by an internal power source, e.g., a battery… [T]he sensor may be wirelessly connected to monitor 314.").

91. The sensor is part of a system for measuring physiological parameters. Ex.1011 (Lisogurski), 3:61-4:5, 4:22-25, 15:30-35. Lisogurski describes "an optical physiological monitoring system" that "may be used to determine physiological parameters such as blood oxygen saturation, hemoglobin, blood

pressure, pulse rate, other suitable parameters, or any combination thereof." Ex.1011 (Lisogurski), 1:10-25, *id.*, 3:43-46. Lisogurski describes a measurement device, for example, "a pulse oximeter… [that] may non-invasively measure the oxygen saturation of a patient's blood." Ex.1011 (Lisogurski), 3:61-4:3, *see id.*, Abstract, 3:43-46, 4:52-62, Figs. 1 & 3.

92. For the reasons stated above, the sensor is a "*system for measuring one or more physiological parameters*."

93. Lisogurski's sensor is battery-powered and can communicate with the monitor over a wireless connection, which a person of ordinary skill in the art would understand means that the sensor is wearable and separate from the monitor. Ex.1011 (Lisogurski), 17:55-59 ("Sensor unit 312 may be powered by an internal power source, e.g., a battery… [T]he sensor may be wirelessly connected to monitor 314."). This sensor is designed to be used with a monitor 104 that includes back-end processing circuitry that is connected to both a user interface and a communication interface. The user interface may include "any type of user input device such as a keyboard, a mouse, a touch screen, buttons, switches, a microphone, a joy stick, a touch pad, or any other suitable input device." Ex.1011 (Lisogurski), 15:20-23; Fig. 1. The user interface also includes a display and a speaker. Ex.1011 (Lisogurski), 15:19-20, Fig 1. The communication interface that

"may include one or more receivers [or] transmitters" each of which "may be configured to allow…wireless communication." Ex.1011 (Lisogurski), 15:49-56.

94. Monitor 104 also includes a display and user interface that allows a user to see the monitored person's physiological parameters and to configure the operation of the system. Ex.1011 (Lisogurski), 15:19-42. The display is a typical feature of such monitoring systems.

95. Lisogurski describes its monitor as a portable, battery powered computing system that includes a touchscreen. Ex.1011 (Lisogurski), 1:16-18 (portable), 15:20-23 (touch screen), 18:65-66 (battery powered). Based on my knowledge and experience, a person of ordinary skill in the art would have understood that Lisogurski was describing devices such as tablets and smartphones, which as I explained above (§IV.B), were commonly used in monitoring systems at the time. Based on Lisogurski's disclosures, a person of ordinary skill in the art would have recognized that there were a finite number of options for what that monitor could be and would have immediately envisioned that the monitor could be a laptop, tablet computer, a smartphone, or other custom-made device. As I explained above in §IV.B, by 2012, tablets and smartphones were already being used in mobile sensor systems, and there was a general trend in the industry to develop devices that would interface with tablets and smartphones. A person of ordinary skill in the art would have considered Lisogurski to disclose a

smartphone or tablet. And at the very least, such a person would have found it obvious to implement Lisogurski's monitor as a tablet or smart phone.

b) "a wearable device adapted to be placed on a wrist or an ear of a user"

96. Claims 1, 7, and 15 specify the above limitation, which Lisogurski teaches.

97. Lisogurski explains that its sensor may be worn on a person's body, including "the wrist to monitor radial artery pulsatile flow . . . and around or in front of the ear." Ex.1011 (Lisogurski), 4:6-20. Accordingly, Lisogurski discloses "*wherein the measurement device is adapted to be placed on a wrist or an ear of a user*."

c) "including a light source comprising a plurality of semiconductor sources that are light emitting diodes, each of the light emitting diodes configured to generate an output optical light having one or more optical wavelengths"

98. Claims 1 and 15 recite the above limitation. Claim 7 recites the same, but substitutes "semiconductor sources" for "light emitting diodes" used in claims 1 and 15. Lisogurki teaches both limitations, shown below.

99. Lisogurski describes a wearable sensor that can include a light source comprising multiple LEDs. Ex.1011 (Lisogurski), 17:42-45 ("In an embodiment, sensor unit 312 may include multiple light sources and detectors."), 10:48-49,

10:58-64 ("light source 130 may include any number of light sources with any suitable characteristics"), Figs. 1 (130) & 3 (316).

100. The sensor can include multiple LEDs ("*a plurality of… light emitting diodes*" or "*semiconductor sources*"), each configured to output a different optical wavelength. Ex.1011 (Lisogurski), 7:38-8:3 ("For example, in a system with two light sources…the first light source may be a high efficiency infrared (IR) LED while the one or more additional light sources may be lower efficiency red LEDs."). A person of ordinary skill in the art would have understood that Lisogurski's LEDs are "*semiconductor sources*."

101. The LEDs "emit photonic signals having one or more wavelengths of light (e.g., Red and IR)" ("*an output optical light having one or more optical wavelengths*"). Ex.1011 (Lisogurski), 10:49-52, *see id.*, 4:42-45. "[T]he IR wavelength may be between about 800 nm and about 1000 nm." Ex.1011 (Lisogurski), 10:56-58. The light source may include any number of LEDs, such as multiple IR LEDs and multiple red LEDs. Ex.1011, 10:58-63, 17:37-45, 19:25-31 ("In some embodiments, the light source may include LEDs of multiple wavelengths, for example, a red LED and an IR led. In some embodiments, the light source may include multiple LEDs of the same wavelength, multiple LEDs of different wavelengths, any other suitable arrangement, or any combination thereof."). The system is designed so that these photonic signals are sent "into a

subject's tissue," (*id.*, 10:49-52). In doing so, the device creates light "transmitted to a particular location in space" as required by the term "optical light." Thus, Lisogurski teaches this element.

d) "the wearable device comprising one or more lenses configured to receive a portion of at least one of the output optical lights and to direct a lens output light to tissue"

102. Claim 1 recites the above limitation. Similarly, claim 7 recites the same limitation with "at least one of the output lights and to deliver a lens output light to tissue" and Claim 15 recites "at least some of the output light and to deliver…." Lisogurski teaches these variations of this limitation as shown below.

103. Lisogurski uses red and infrared LEDs to emit an light. Ex.1011 (Lisogurski), 10:53-56, 7:38-8:3. Although Lisogurski does not explicitly describe using a lens, the person of ordinary skill in the art would have understood that Lisogurski likely would use a lens with each LED ("*one or more lenses*"), or at least it would have been obvious to do so.

104. Based on my knowledge and experience, it was well-known to those skilled in the art that a conventional LED package includes a light emitting semiconductor, such as a semiconducting material doped with impurities to create a p-n junction, that creates the light. That semiconductor typically is encapsulated in glass or another medium which is called an encapsulant. The encapsulant can

serve several purposes. One is that it protects the semiconductor from the environment (*e.g.*, moisture, dust). But another common purpose of the encapsulant is to act as a lens. The encapsulant typically is shaped to focus the light emitted by the LED. In the 2012 time frame, the vast majority of commercially available LEDs were designed this way.

105. A person of ordinary skill in the art would have understood that there were three types of LEDs: (i) LEDs with no encapsulant, (ii) LEDs with an optically inert encapsulant, and (iii) LEDs with an encapsulant that acts as a lens. *See generally* Ex.1035 (Light Emitting Diodes), 97-98, 191-99, 266-67. A lens that is part of the LED package is called a primary optic.

106. A person of ordinary skill in the art designing a system based on Lisogurski would have recognized that Lisogurski was describing a device that would benefit from selecting an LED that uses an encapsulant that functions as a lens, as this was a common configuration at the time. Even if Lisogurski did not explicitly or implicitly describe that each LED includes a lens, it would have been obvious to select one. The lenses on the LEDs can be used to direct all of the emitted light at an angle closer to perpendicular to the chip or substrate. For example, instead of emitting light 180°, light might be emitted over a 90° or 120° range. Using a lens would increase the amount of light that is directed toward the sample or person by directing more of the LED's light outward toward the tissue.

Using a lens is a standard way to increase the directional intensity of, in a reduced solid angle from, the LED without using more power. Conserving power is particularly important for mobile, battery-powered, wireless devices, which have limited power compared to stationary devices that are powered by, for example, wall outlets.

107. Where Lisogurki is implemented using LEDs with lenses, Lisogurski meets this claim element. Each of Lisogurski's LEDs would emit a portion ("*some*") of a "*lens output light*," which would be captured and focused by the encapsulant lens ("*one or more lenses*") on each LED and focused on the tissue.

108. LEDs also can be used with lenses that are separate from the LED packaging. These are called secondary optics. As I explained in the background section above, it was well-known in the art that a lens is a "basic building block" of an optical sensor (Ex.1019 (Biomedical Engineering Handbook), 765) and that lenses commonly were part of optical sensors.

109. To the extent one argues Lisogurski's LEDs do not suggest the use of lenses ("transparent surfaces used to collimate (make parallel) or focus rays of light" per Apple's construction or within that term's ordinary meaning as proposed by Omni), using a lens for each LED would have been obvious based on the knowledge of a person of ordinary skill in the art. Using a lens to focus light was a well-known technique that has been around for a long time, is a central tool for

most optical and optical measurement systems, and is done in most optical and optical measurement systems. Based on my knowledge and experience, a person of ordinary skill in the art would recognize that a lens would collimate or focus light is the same concept that eye-glasses use to correct a person's vision. That person would recognize that the lens in glasses collimates or focuses light. Accordingly, such a person would further understand that it would be obvious to use a lens with an LED to focus the light in a way that improves detection.

110. Even if Lisogurski itself does not render the use of one or more lenses obvious, the combination of Lisogurski and Carlson does.

111. Carlson discloses using "at least one beam shaping optical element to direct the emitted light" towards tissue. Ex.1009 (Carlson), [0013]. The beam shaping element can be "diffractive or refractive lenses, to direct the emitted optical radiation of, e.g., the LED light source into the human or animal tissue …." Ex.1009 (Carlson), [0013], [0014], [0024], [0062]. A "refractive lens" is one that focuses rays of light, and as described in Carlson, this lens would be a transparent surface that focuses or collimates rays of light. Put another way, a refractive lens focuses rays of light thereby meeting Apple's construction of "*lens*." Figure 4 shows two lenses 21 receiving light beams 8 emitted by LEDs 15 ("*a portion of at least one of the output optical light*") and delivering light bundles or beams 12 to tissue ("*deliver a lens output light to tissue*"). Ex.1009 (Carlson), [0054], [0062].

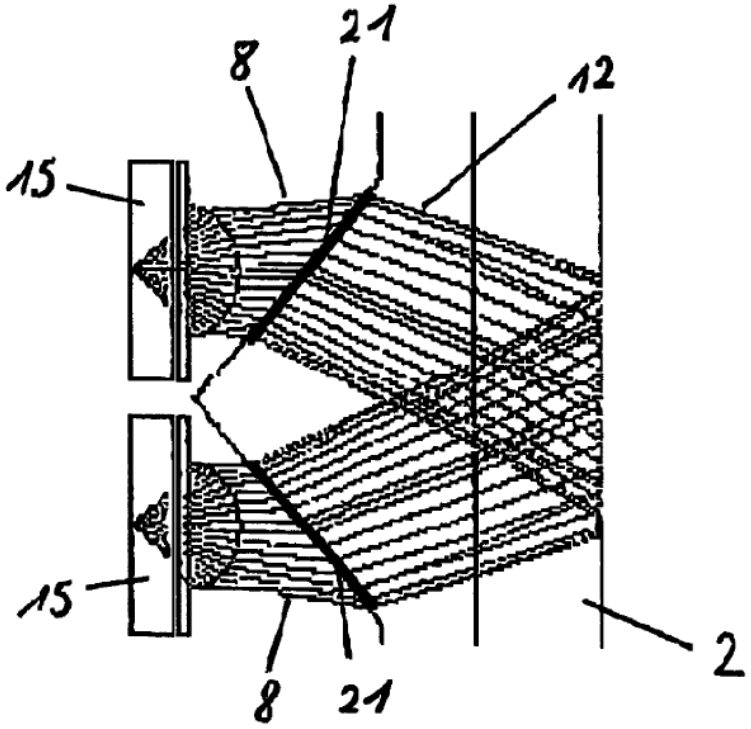

Figure 4

Ex.1009 (Carlson), Fig. 4, *id.*, [0054] ("in Fig. 4, using the beam shaping optics 21, the two initial light beams 8 are guided in the form of bundled beams 12"). As shown in the figure, the light within each beam is "transmitted to a particular location in space" and meets the construction of "optical light."

112. It would have been obvious to include these lenses in Lisogurski's sensor to focus the light emitted by the LEDs onto a person's skin as described by Carlson. Carlson itself explains that it is beneficial to include lens in optical sensors to increase the optical signal power without increasing the actual power used by the system and that the lens focuses light on ("*delivers*" or "*directs a lens output light*") the tissue. Ex.1009 (Carlson), [0014] ("The basic idea… is to use ***a***

beam-shaping element, such as e.g., … lenses…, in order to increase the optical signal power…, thus increasing the Signal/Noise … ratio." (emphasis added)), *id.*, [0010]. A person of ordinary skill in the art would have been motivated to include lenses in Lisogurski because Lisogurski is directed to a system for improving the power consumption of optical sensing devices and that includes techniques for improving the signal-to-noise ratio of the measured optical signal. Ex.1011 (Lisogurski), 6:3-6, 9:49-60, 13:60-14:10, 14:40-55, 37:6-20. Adding lenses to Lisogurski would further its own goals and improve its operation.

113. A person of ordinary skill in the art would have recognized that adding lenses to Lisogurski would complement its operation. It was well-known that lenses are one of the "basic building blocks" of optical sensors, (Ex.1019 (Biomedical Engineering Handbook), 765), and that incorporating lenses into Lisogurski's sensor was a predictable arrangement of known elements, with each performing the same function it was known to perform and yielding what one would expect from the arrangement.

114. For all of these reasons, Lisogurski and Carlson render obvious "*one or more lenses configured to receive a portion of at least one of the output optical lights and to deliver a lens output light to tissue*."

e) "the wearable device further comprising a detection system configured to receive at least a portion of the lens output light reflected from

the tissue and to generate an output signal having a signal-to-noise ratio"

115. Claims 1, 7, and 15 recite the above limitation, which Lisogurski teaches.

116. Lisogurski includes a sensor with "[o]ne or more detector 318." Ex.1011 (Lisogurski), 17:40-42, *see also id.*, 11:9-10, Figs. 1 (140) & 3 (318). These detector(s) are connected to front end processing circuitry (together, "*a detection system*"), which "may receive a detection signal from detector 140 and provide one or more processed signals to back end processing circuitry 170." Ex.1011, 12:42-45. The detector(s) receives "the light that is reflected by or has traveled through the subject's tissue" ("*receive*[*s*]… *at least a portion of the lens output light*"). Ex.1011, 17:40-42; see also id., 11:9-10; Fig. 1 (140); Fig. 3 (318). The detector(s) then "convert[s] the intensity of the received light into an electrical signal.","" and thus, "*generate*[*s*] *an output signal*." Ex.1011, 11:14-17; 11:20-25; Fig. 1 (102); Fig. 3 (312). "After converting the received light to an electrical signal, detector 140 may send the detection signal to monitor 104." Ex.1011 (Lisogurski), 11:20-22. The sensor also may further process the electrical signal before transmitting the detection signal to the monitor. Ex.1011 (Lisogurski), 11:25-27.

117. Lisogurski describes that the detection signal "*ha[s] a signal-to-noise ratio*." Ex.1011, 14:49-50 ("This may have a detrimental effect on ***the signal-to-***

noise ratio of the detection signal" (emphasis added)); *see id.*, 9:46-52 (noting the detected signal may include "background noise" and that the light drive parameters of the LEDs may be modified to "improve ***the signal-to-noise ratio***"). Lisogurski further discloses that the "detection signals" have "*a signal to noise ratio*," and the "processed signals" originate from those "detection signals." Ex.1011, 14:49-50 ("This may have a detrimental effect on the signal-to-noise ratio of the detection signal"); *see also* Ex.1011, 9:46-60, 11:20-27. Accordingly, a person of ordinary skill in the art would have recognized that "processed signals" also have a "*signal-to-noise ratio*". Such a person would thus have recognized that both the processed and detection signal has its own "*signal-to-noise ratio*" (that can be improved).

f) "wherein the detection system is configured to be synchronized to the light source"

118. Claims 1, 7, and 15 recite the above limitation, which Lisogurski teaches.

119. The relevant components are depicted in the below annotated Figure 1 of Lisogurski:

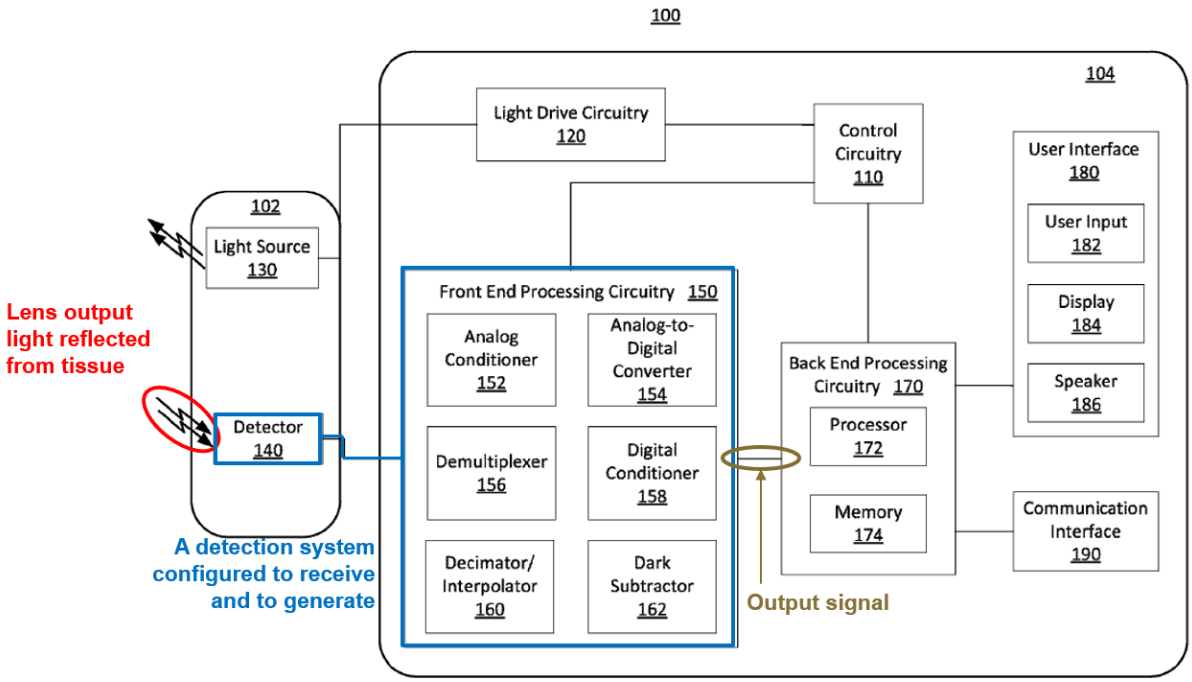

FIG. 1

120. The front-end processing circuitry is synchronized with the light drive circuitry that controls the pulses of the LEDs. Ex.1011 (Lisogurski), 11:41-46 ("front end processing circuitry 150 may… operate ***synchronously*** with light drive circuitry 120. For example, front end processing circuitry 150 may ***synchronize*** the operation of an analog-to-digital converter and a demultiplexer with the light drive signal based on the timing control signals." (emphasis added)). Therefore, the front-end processing circuitry and the detector (together being a "*detection system*") are "*synchronized*" to the light drive signal ("*the light source*").

121. Lisogurksi also describes examples where the firing rate of an LED is correlated to the sampling rate of an analog-to-digital converter in the detector. Ex.1011 (Lisogurski), 33:47-49 ("In some embodiments, sampling rate modulation

may be correlated with light drive signal modulation."); *see also* 2:1-2, 27:44-52 (LED firing rate can be modulated). Lisogurski explains "[f]or example, the time between 'on' periods [for an LED] may be the length of time of 'off' period 220 of FIG. 2A… [D]ecreasing the duration of the 'off' periods (i.e., ***increasing the emitter firing rate***) relates to an increased sampling rate." Ex.1011, 35:27-31 (emphasis added). Lisogurski describes an embodiment where the measurements taken by the detection system have a one-to-one correlation, with one sample taken per on period. Ex.1011 (Lisogurski), 35:17-19. Because the measurements taken by the detection system in this embodiment are coordinated in time with the pulses emitted by the LEDs, the LEDs and the detector (along with its front-end processing circuitry) (together being a "*detection system*") are synchronized.

122. Lisogurski's description of the synchronizing process, which uses timing signals to synchronize the operation of the light source and the detection circuitry, is consistent with the embodiments in '484 specification. Ex.1001, 16:67-17:2 ("In one embodiment, the light source may be modulated, and then the detection system would be synchronized with the light source.").

123. I understand that Patent Owner may argue that Lisogurski does not describe this claim element because the front-end processing circuitry is depicted in monitor 104 which is separate from wearable sensor 102 that contains the

detector. Even if that were required, it would have been obvious to include the front-end processing circuitry and detector in Lisogurski's wearable sensor.

124. It would have been obvious to a person of ordinary skill in the art to implement the front-end processing circuitry and detector in the same device. Lisogurski's sensor can "preprocess" the electrical signal before transmitting the signal to the monitor. Ex.1011 (Lisogurski), 11:20-27. The sensor may be a separate device from the monitor that is wirelessly connected to the monitor. Ex.1011 (Lisogurski), 17:55-59 ("Sensor unit 312 may be powered by an internal power source, e.g., a battery (not shown)…. [T]he sensor may be wirelessly connected to monitor 314 (not shown)."), 18:23-25, *see also id.*, 18:16-31. Based on these disclosures, a person of ordinary skill in the art would have at least found it obvious to configure the system this way even though this particular wireless configuration is not depicted in Lisogurski's figures.

125. It would have been obvious to a person of ordinary skill in the art to include the front-end processing circuitry in the sensor so that the sensor could process the detected signal before wirelessly transmitting it to the monitor. A person of ordinary skill in the art would have known that in order for information contained in the analog signal output from the detector to be wirelessly transmitted effectively, it would have to be converted to digital form. The analog-to-digital conversion (and other processing) is performed by the front-end processing

circuitry. The person of ordinary skill in the art would have understood that measurement accuracy would be improved by performing the analog-to-digital conversion prior to wireless transmission, and by being able to tune the measurement process by, for example, adjusting any gain values. Accordingly, it would have been obvious to include the front-end processing circuitry in the sensor. Adding the front-end processing circuitry to the sensor would not have affected the operation of the device because the necessary circuitry is small and power efficient, and could easily be integrated into the wearable sensor.

126. Integrating the detector and front-end processing circuitry into the same device is consistent with Lisogurski's explanation that "[i]n some embodiments the functionality of some of the components may be combined in a single component… [or] the functionality of some of the components of monitor 104… may be divided over multiple components." Ex.1011 (Lisogurski), 16:2-9.

127. This also is consistent with general trends in the industry. As I explained in § IV.B, above, by 2012, there was a general trend in the industry to include additional features in wearable devices to improve those device's operation in mobile monitoring systems or for sports and personal fitness applications.

g) "wherein the detection system comprises a plurality of spatially separated detectors, and wherein at least one analog to digital converter is coupled to at least one of the spatially

separated detectors"

128. Claims 1, 7, and 15 recite the above limitation, which Lisogurski teaches.

129. As I explained above §VII.A.4.e, the detectors and front-end processing circuitry together are the "*detection system*." Lisogurski's sensor includes "[o]ne or more detector 318… for detecting the light that is reflected by… the subject's tissue." Ex.1011 (Lisogurski), 17:40-42, see also id., 11:9-10, Figs. 1 (140), 3 (318). The sensor "may include multiple light sources and detectors, which may be spaced apart." Ex.1011 (Lisogurski), 17:43-45. Accordingly, Lisogurski's sensor includes "a plurality of spatially separated detectors."

130. Each of Lisogurski's detectors "converts the intensity of the received light into an electrical signal." Ex.1011 (Lisogurski), 11:14-16, 11:20-22, Figs. 1, 3. These electrical signals are received by the front-end processing circuitry, and are passed between the components of the circuitry. Ex.1011 (Lisogurski), 13:6-60. The front-end processing circuitry includes an analog-to-digital converter. Ex.1011 (Lisogurski), 13:21-27, 13:27-30 ("Analog-to-signal converter 154 may be any suitable type of analog-to-digital converter of sufficient resolution to enable a physiological monitor to accurately determine physiological parameters.").

131. As shown in annotated Figure 1 below, the detector is coupled to the front-end processing circuitry, which includes an analog-to-digital converter:

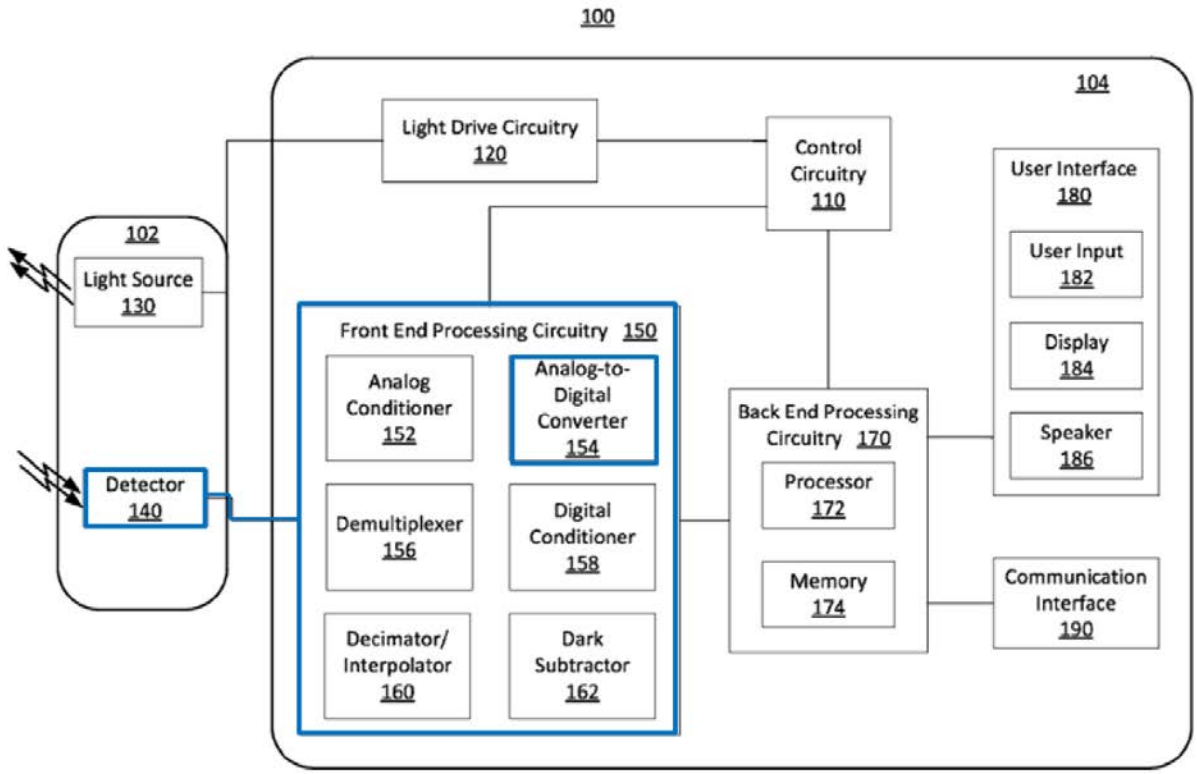

FIG. 1

Ex.1011 (Lisogurski), Fig. 1, 13:7-12.

h) "wherein a detector output from the at least one of the plurality of spatially separated detectors is coupled to an amplifier having a gain configured to improve detection sensitivity"

132. Claim 1 recites the above limitation—Claims 7 and 15 do not. Lisogurski teaches this limitation.

133. Lisogurksi discloses that "the system may amplify the received signal using the front end processor circuitry." Ex.1011, 19:52-53. A person of ordinary skill in the art would have understood this disclosure to mean that Lisogurski's front-end processing circuit necessarily has "*an amplifier*." *See id.*, 19:52-53,

26:38-45. Figure 1 also shows that front-end circuitry "is coupled to" the "*spatially separated detectors*," shown below:

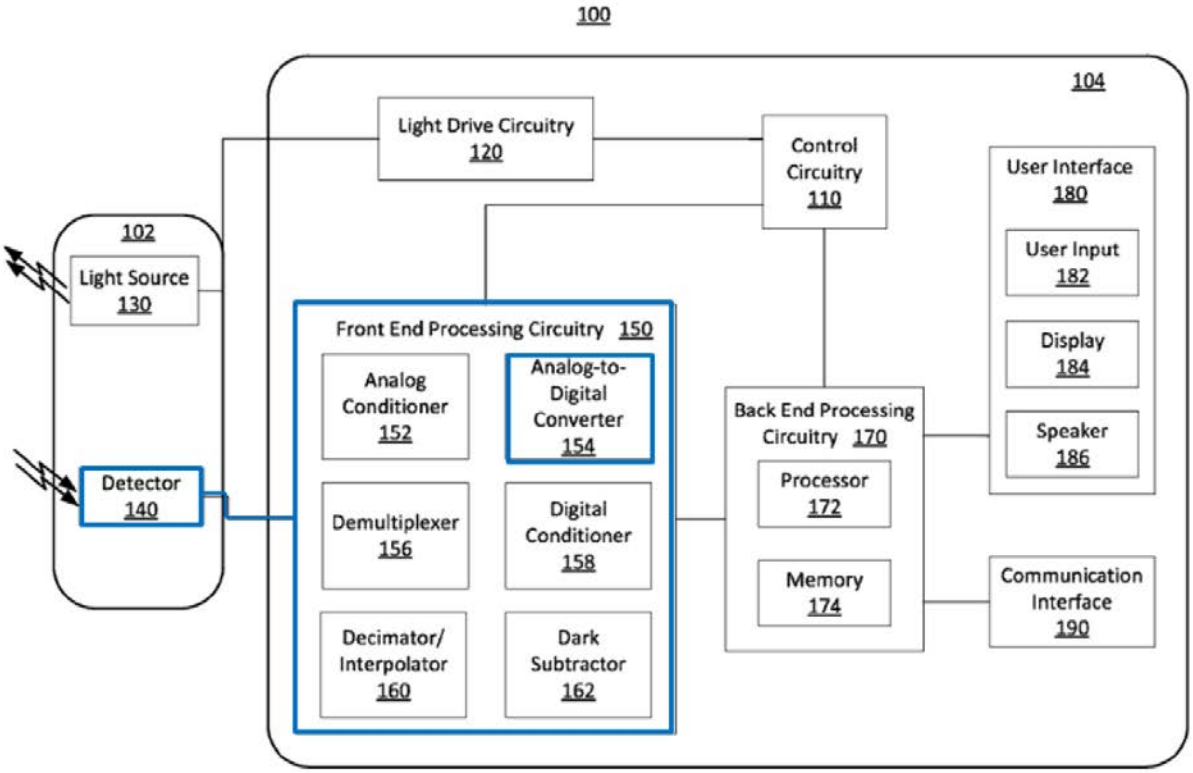

FIG. 1

Ex.1011 (Lisogurski), Fig. 1, 13:7-12.

134. Lisogurski further discloses that "[t]he gain of the amplifier may be adjusted based on the emitted light brightness…." Ex.1011, 19:56-58. That gain may be modulated "using a technique correlated to the cardiac cycle modulation" to improves a detected signal to noise ratio ("*improve detection sensitivity*"). Ex.1011, 19:54-55; *see* Ex.1011, 9:46-58.

135. Lisogurksi also explains that the "amplified signal matches the range of the analog-to-digital converter and thus increases resolution." Ex.1011, 26:44-

45; *see id*., 26:38-44. A person of ordinary skill in the art would have understood that that Lisogurski's disclosure about increased resolution means its device has "*improve*[*d*] *detection sensitivity*."

i) "a smart phone or tablet comprising a wireless receiver, a wireless transmitter, a display, a microphone, a speaker, one or more buttons or knobs, a microprocessor and a touch screen, the personal device configured to receive and process at least a portion of the output signal"

136. Claims 1 and 7 recite the above limitation. Claim 15 recites the same limitation and substitutes a "microphone" for the "voice input module." Lisogurksi teaches both.

137. Lisogurski explains that its sensor is designed to be used with a monitor, which is described as a portable, battery powered computing system that includes a touchscreen. Ex.1011 (Lisogurski), 1:16-18 (portable), 15:20-23 (touch screen), 18:65-66 (battery powered). When thinking about what devices meet that description, a person of ordinary skill in the art would have immediately thought of a tablet computer or a smartphone as examples of such devices that could be used in this application. That person also would have recognized that there were a finite number of devices that would meet that description. As I explained above in §IV.B, by 2012, tablets and smartphones were already being used in mobile sensor systems, and there was a general trend in the industry to develop devices that

would interface with tablets and smartphones. A person of ordinary skill in the art would have considered Lisogurski to disclose a smartphone or tablet. And at the very least, the person of ordinary skill in the art would have found it obvious to implement Lisogurski's monitor as a tablet or smart phone.

138. Lisogurski's back-end processing circuitry includes other elements of the claim: "*a wireless receiver, a wireless transmitter, a display, a voice input module, a speaker, and a touch screen*." The back-end processing circuitry is coupled to the user interface, which may include "any type of user input device such as a keyboard, a mouse, a touch screen, buttons, switches, a microphone, a joy stick, a touch pad, or any other suitable input device." Ex.1011 (Lisogurski), 15:20-23 (emphases added); Fig. 1. The user interface also includes a display and a speaker. Ex.1011 (Lisogurski), 15:19-20; Fig 1. The back-end processing circuitry is connected to a communication interface that "may include one or more receivers [or] transmitters" each of which "may be configured to allow…wireless communication." Ex.1011 (Lisogurski), 15:49-56 (emphases added).

139. The back-end processing circuitry of monitor 104 includes a processor that "may determine one or more physiological parameters based on the received physiological signals" from the front end processing circuitry ("*configured to receive and process at least a portion of the output signal*") and a display that shows those physiological parameters ("*the processed output signal*"), including

"for example, an estimate of a subject's blood oxygen saturation generated by monitor 104 (referred to as an 'SpO_2' measurement) [and] pulse rate information." Ex.1011 (Lisogurski), 14:62-64. 15:30-35.

140. The back-end processing circuitry also includes a memory such as RAM, ROM, flash memory, hard drive (magnetic disk). Ex.1011 (Lisogurski), 14:64-15:16; Fig. 1 (174). Lisogurski explains that the system can store a history of the determined physiological parameters, and logically, this history would be stored in memory. Ex.1011 (Lisogurski), 27:31-36, 30:42-48, 33:23-27.

141. The determined physiological parameters may not only be displayed, but also may be published "to a server or a website" and the parameters may be made available to a user by any other suitable technique. Ex.1011 (Lisogurski), 26:55-60. To publish the data to a server or website or to have it transmitted to another device, the back-end processing circuitry of the monitor can transmit information to external devices through a wireless transmission link such as "WiFi, IR, WiMax, BLUETOOTH, UWB or other standards." Ex.1011 (Lisogurski), 15:43-48; 15:55-57.

142. The determined physiological parameters also may be wirelessly transmitted to another monitor 326 that can process and display information from multiple monitoring devices . Ex.1011 (Lisogurski), 18:11-15, 18:49-62 ("Multi-parameter physiological monitor 326 may be configured to calculate physiological

parameters and to provide a display 328 for information from monitor 314 and from other medical monitoring devices… Monitor 314 may be communicatively coupled to multi-parameter physiological monitor 326…and/or may communicate wirelessly.”). Both monitors can further share the information with servers or other workstations. Ex.1011 (Lisogurski), 18:11-15, 18:62-65 (“In addition, monitor 314 and/or multi-parameter physiological monitor 326 may be coupled to a network to enable the sharing of information with servers or other workstations.”). Therefore, “*at least a portion of the processed output signal is configured to be transmitted over a wireless transmission link*.”

j) “a cloud configured to receive over the wireless transmission link an output status comprising the at least a portion of the processed output signal, to process the received output status to generate processed data and to store the processed data”

143. Claims 1, 7, and 15 recite the above limitation, which Lisogurski teaches.

144. Lisogurski states that the physiological parameters and other data (“*an output status comprising at least the processed output signal*”) determined by the back-end processing circuitry of the monitor may be wirelessly transmitted to several different devices, including to “a server or a website” or to another monitor, such as a multi-parameter physiological monitor 326, (each of which is a

"*cloud*" device). Ex.1011 (Lisogurski), 26:55-60 (publish to server or website), 18:11-15, 18:58-62 (monitor can send data to another monitor), *id.*, 15:43-48 (data can be wirelessly sent to "electronic circuitry, a device, a network, a server or other workstations"), 15:55-57 (describing wireless transmission). Lisogurski explains multi-parameter monitor 326 is a remote device that is in wireless communication with (it sends data to and receives an output signal from) monitor 104/314 (which, as I explained above, could be a tablet computer) and that can be "coupled to a network to enable the sharing of information with servers or other workstations," which shows it can be part of a cloud-based server. Ex. 1011, 15:43-48, 18:49-65, Fig. 3. The Cloud generally refers to servers (e.g., computers that provide computation and storage services) that are remotely accessed. or communicated with, over the Internet. Cloud computing is delivery of on-demand and remotely accessed computing services including software, applications, databases, disk storage, and processing power -- typically over the internet. In this context, a "cloud" is a remote storage and computing device (*e.g.*, a server) that can be accessed via the internet.

145. The data transmitted to a server, website, another monitor, or other remote device may be further processed and stored. To "publish" data to a server or website, the server or website would need to process the data and then store it. *See* Ex.1011 (Lisogurski), 26:55-60. The data would be stored both in volatile

memory (for example RAM as it is received and processed) and also in longer term memory so it could be accessed by a user. Lisogurski also explains that "processing equipment remote to the system may be used to determine physiological parameters." Ex.1011 (Lisogurski), 26:51-53. This would include any server or website that received the transmitted data.

146. Where the remote cloud device, or compute, is another monitor, that monitor can be a "[m]ulti-parameter physiological monitor 326 [] configured to calculate physiological parameters and to provide a display 328 for information from monitor 314 and from other medical monitoring devices or systems." Ex.1011 (Lisogurski), 18:49-53. A person of ordinary skill in the art would have understood this monitor could further calculate parameters for display and combine the data from various monitors. This data also would need to be stored for display and access.

147. Therefore, a person of ordinary skill in the art would have understood that all of these devices generate and store processed data in order to perform the functions described in Lisogurski.

(i) "wherein the output signal is indicative of one or more of the physiological parameters, and the cloud is configured to store a history of at least a portion of the one or more physiological parameters over a specified period of time"

148. Claims 1, 7, and 15 recite "*wherein the output signal is indicative of one or more physiological parameters*." Claims 7 and 15 end there and Claim 1 recites the remaining portion of the limitation (*i.e.*, "*and the cloud…specified period of time*"). Lisogurski teaches these limitations

149. Lisogurski explains that the data ("*output signal*") transmitted to a server, website, another monitor, or other cloud device may be stored or "published." Ex.1011 (Lisogurski), 26:55-60. And where the cloud device is another monitor, that monitor can be a "[m]ulti-parameter physiological monitor 326 [] configured to calculate physiological parameters and to provide a display 328 for information from monitor 314 and from other medical monitoring devices or systems." Ex.1011 (Lisogurski), 18:49-53.

150. Lisogurski explains that the various devices in its system can collect historical data and use that data in its processes. For example, Lisogurski states that its system can perform "historical analysis of prior cardiac cycles." Ex.1011 (Lisogurski), 20:8-9. And "[s]tatistical information… may also be calculated… for the historical information." Ex.1011 (Lisogurski), 20:9:13. Lisogurski further states:

> In some embodiments, ***historical information may be used to determine the timing of cardiac cycle modulation***. For example, information from previous pulse cycles may be used to determine "on" and "off" states. In some embodiments, ***the system may use***

> ***statistical information from historical information***, for example, mean period and/or standard deviation of one or more previous pulse cycles. The system may use a mean period to determine or estimate the time period between a previous period of interest and the next period of interest. For example, the system may wait a particular percentage (e.g., 80%) of the mean period following a period of interest before returning to an "on" state. In some embodiments, the particular percentage or other criteria may be based on statistical information. For example, a smaller standard deviation in the period of historical pulses may indicate that there is relatively less variation in the pulse period…. In some embodiments, the system may remain in a particular cardiac cycle modulation mode for an amount of time following a historical event. For example, the system may operate in a high power mode without cardiac cycle modulation for a certain time period following, for example, high noise levels, a loss of signal, or an irregular cardiac rhythm….

Ex.1011 (Lisogurski), 8:45-9:11 (emphasis added).

151. Lisogurski explains different historical data can be used depending on the physiologic parameter calculated by the system. The physiologic parameters may be calculated by the monitor or a cloud device.

> In some embodiments, the cardiac cycle modulation technique may be selected or varied, for example, based on empirical data…. For example, ***the system may vary the timing of a cardiac cycle modulation technique to determine pulse identification based on a metric related to the determined pulse, such as a standard deviation***.

> In another example, data points may be analyzed to determine if a cardiac pulse peak is aligned with a cardiac cycle modulation maximum, and the system may make phase relationship adjustments accordingly. In some embodiments, more complex variation algorithms may be used ***depending on the determined physiological parameter***. ***Selections and variations of cardiac cycle modulation techniques may also be based on empirical data, user input, lookup tables, historical information***, other suitable information or any combination thereof.

Ex.1011 (Lisogurski), 6:53-7:3 (emphasis added).

152. To calculate historical information, the system must store historical physiological data ("*history of at least a portion of the one or more of the physiological parameters*"), over a specified period of time (*e.g.*, a certain number of cardiac cycles or a certain period of time).

153. Lisogurski states that the cloud device can be another monitor, such as be a "[m]ulti-parameter physiological monitor 326 [] configured to calculate physiological parameters and to provide a display 328 for information from monitor 314 and from other medical monitoring devices or systems." Ex.1011 (Lisogurski), 18:49-53. A person of ordinary skill in the art would have known that such monitors track historical information (for example over the past 3, 6, 12, or 24 hours) to allow medical personnel to track the status of a patient.

154. A person of ordinary skill in the art would therefore understand that the cloud device (such as a server or a website) stores a history of the data and can perform an historical analysis.

k) "the wearable device configured to increase the signal-to-noise ratio"

155. Claims 1, 7, and 15 recite the above limitation that is taught by Lisogurksi.

156. Lisogurski explains that the light source is in the wearable sensor 102. Ex.1011 (Lisogurski), 10:48-49. The circuitry may alter the light drive parameters of the LEDs in response to "the level of noise, ambient light, [or] other suitable reasons," and "increas[ing] the brightness of the light sources in response to [increased level of background] noise to improve the signal-to-noise ratio." Ex.1011 (Lisogurski), 9:46-52, *id.*, 5:55-6:6 (discussing modulation techniques and "conventional servo algorithms" for adjusting the signals emitted by the LEDs), 1:67-2:3.

157. The changes in the light drive parameters can be made to mitigate the effects of noise and changes from motion, or ambient light, for example, to thereby increase the signal-to-noise ratio. Conventional feedback control, or servo, algorithms would adjust the light drive signals due to, for example, ambient light changes, sensor positioning, and other sources external to the body variation.

Conventional feedback control approaches would vary parameters at a rate and in a manner different than cardiac cycle modulation. A conventional feedback control, or servo, algorithm may adjust drive signal brightness, to compensate for ambient light variation, at a time scale on the order of seconds. Cardiac cycle modulation schemes would adjust the brightness of a light in a way that is synchronized to the cardiac cycle and similar to or faster than the cardiac pulse rate. The cardiac cycle modulation techniques may depend on the desired physiological parameter or unique characteristics of the individual's cardiac pulse patterns. Ex.1011 (Lisogurski), 5:59, 9:46-52, 9:57-60, 14:49-55.

158. Lisogurski describes several modulation techniques that can increase signal-to-noise ratio. One of these is cardiac cycle modulation. Ex.1011, 25:49-55; 31:11-24, 31:39-55. The signal modulation techniques are controlled by control circuitry and light drive circuitry, which generate a light drive signal for activating and controlling the sensor's light sources. Ex.1011 (Lisogurski), 1:44-46, 11:38-41, 11:50-54. Light drive signal "[p]arameters that may be varied include light intensity, firing rate, duty cycle, other suitable parameters, or any combination thereof." Ex.1011 (Lisogurski), 1:19-21. These parameters correspond to instantaneous brightness (light intensity), frequency (firing rate), and pulse width which is the duration of each pulse of light (duty cycle).

159. The relevant circuitry is depicted in Figure 1 (annotations added) of Lisogurski:

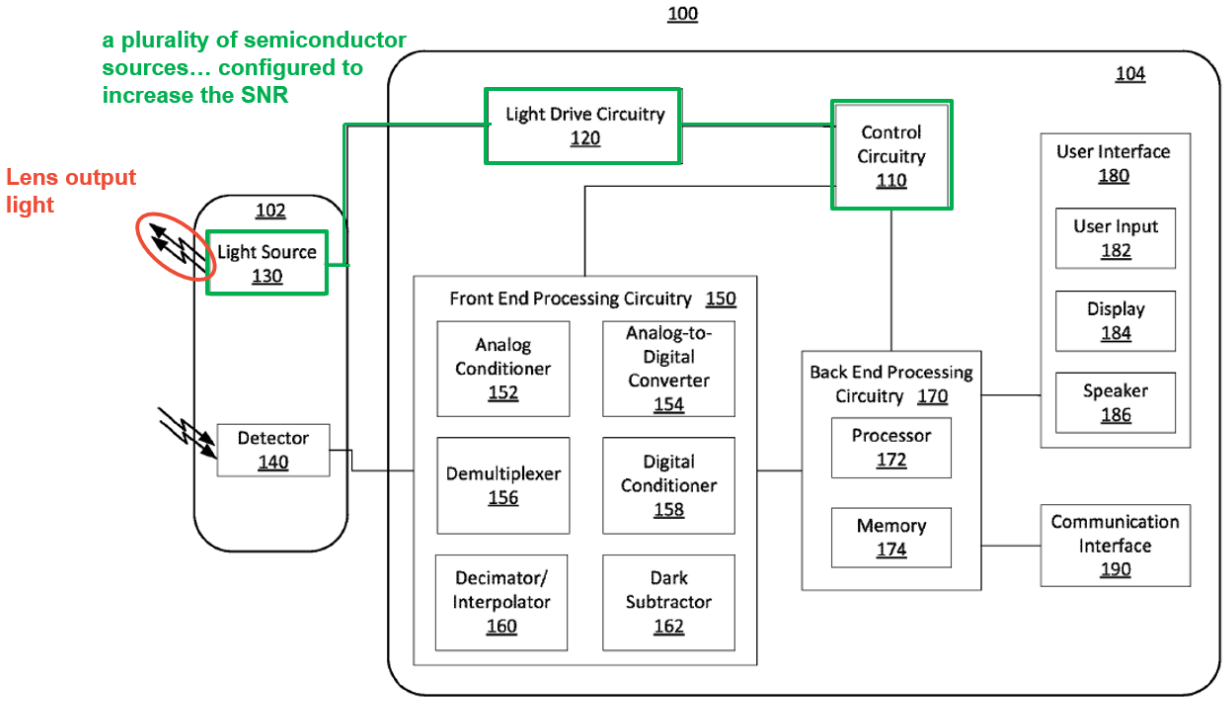

FIG. 1

160. I understand that Patent Owner may argue that Lisogurski does not disclose this element because the control and light drive circuitry that control the LEDs is depicted in monitor 104 which is separate from the wearable sensor 102 that contains the LEDs. Even if that were required, that configuration of Lisogurski would have been obvious.

161. It would have been obvious to integrate the control and light drive circuitry into the sensor. Lisogurski discloses an embodiment where the sensor is a separate device that is wirelessly connected to the monitor. Ex.1011 (Lisogurski), 17:55-59 ("Sensor unit 312 may be powered by an internal power source, e.g., a

battery (not shown)…. [T]he sensor may be wirelessly connected to monitor 314 (not shown).”), 18:23-25, *see also id.*, 18:16-31. While this configuration of the sensor is not depicted in Lisogurski’s figures, a person of ordinary skill in the art would have at least found it obvious to configure the sensor and monitor to work in this wireless embodiment based on Lisogurski’s own description of these elements.

162. The control circuitry directs the light drive circuitry to generate the light drive signal, which is the electric current provided to the LEDs that turns them on and determines their brightness. Ex.1011 (Lisogurski), 11:38-41, 11:50-54, 25:52-55. A person of ordinary skill would have understood that the light drive circuitry would be in the sensor because that is where the LEDs are located. The electrical current cannot be transferred wirelessly from the monitor to the sensor. Because these circuits work together to output the electric current that is applied to the LEDs, a person of ordinary skill in the art would have understood that this circuitry would need to be in the sensor with the LEDs, or at least that it would have been obvious to include the circuitry there.

163. Adding the light drive and control circuitry to the sensor would not have affected the operation of the device. These circuits would have been small and power efficient, and could easily be integrated into the wearable sensor. Lisogurski itself recognizes its components can be divided in the difference ways, explaining that “[i]n some embodiments the functionality of some of the

components may be combined in a single component… [or] the functionality of some of the components of monitor 104… may be divided over multiple components." Ex.1011 (Lisogurski), 16:2-9.

164. This also is consistent with general trends in the industry. As I explained in § IV.B, above, by 2012, there was a general trend in the industry to include additional features in wearable devices to improve those device's operation in mobile monitoring systems or for sports and personal fitness applications.

(i) "by increasing light intensity of at least one of the [plurality of] semiconductor sources from an initial light intensity"

165. Claims 1, 7, and 15 recite the above limitation, which Lisogurski teaches.

166. Lisogurski explains that the signal-to-noise ratio can be increased by varying the light drive parameters of the light source.

> In some embodiments, ***the system may alter the cardiac cycle modulation technique based on the level of noise, ambient light, other suitable reasons***, or any combination thereof. The system may receive, for example, an increased level of background noise in the signal due to patient motion. ***The system may increase the brightness of the light sources in response to the noise to improve the signal-to-noise ratio***. In some embodiments, the system may increase brightness throughout the cardiac cycle because the system may require increased signal amplitudes to differentiate between fiducial

> and other points of interest related to physiological parameters and those related to noise or motion. In some embodiments, the system may change from a modulated light output to a constant light output in response to noise, patient motion, or ambient light.

Ex.1011 (Lisogurski), 9:46-60 (emphasis added). A person of ordinary skill would have recognized that a light source's brightness must originally have an initial light intensity so the system can later increase it. Although Lisogurski describes how varying the light drive parameters increases the signal-to-noise ratio in the context of cardiac cycle modulation, the same principle applies to all the modulation processes, including drive cycle modulation and the servo algorithms. Lisogurski also explains that all three types of modulation may be used. Ex.1011 (Lisogurski), 6:26-31 ("The cardiac cycle modulation may represent a lower frequency envelope function on the higher frequency drive cycle. For example, cardiac cycle modulation may be an envelope on the order of 1 Hz superimposed on a 1 kHz sine wave drive cycle modulation."), 8:22-26 ("cardiac cycle modulation may be implemented in addition to a drive cycle modulation, conventional servo algorithms, or any combination thereof."), 17:21-29. Lisogurski explains that the frequency of the light source can be changed for the same reason. Ex.1011 (Lisogurski), 5:57-61, 9:46-51, 35:5-9 ("It will also be understood that the earlier described embodiments relating to varying light output may also apply to sampling rate."). So the person of ordinary skill in the art would

understand Lisogurski to disclose varying the frequency (firing rate) of the light source to increase the signal-to-noise ratio, just as Lisogurski discloses increasing the light source amplitude for that same reason.

167. Lisogurski explains that a conventional servo algorithm can vary the light drive parameters of the light source for the same reasons it does with respect to cardiac cycle modulation.

> In some embodiments, conventional servo algorithms may be used in addition to any combination of cardiac cycle modulation and drive cycle modulation. Conventional servo algorithms may adjust the light drive signals due to, for example, ambient light changes, emitter and detector spacing changes, sensor positioning, other suitable parameters, or any combination thereof. Generally, conventional servo algorithms vary parameters at a slower rate than cardiac cycle modulation. For example, a conventional servo algorithm may adjust drive signal brightness due to ambient light every several seconds.

Ex.1011 (Lisogurski), 5:55-64.

168. A conventional servo, or feedback control, algorithm would vary parameters in a manner and at a rate different than cardiac cycle modulation. Conventional feedback control algorithms would adjust the light drive signals due to, for example, ambient light changes, sensor positioning, and other sources external to the body variation. A conventional servo algorithm may adjust drive

signal brightness, to compensate for ambient light variation, at a time scale on the order of seconds.

169. Lisogurski explains that the signal-to-noise ratio can be increased by increasing the "brightness" of a light source. For example, Lisogurski explains that the sensor may receive "an increased level of background noise in the signal due to patient motion. The system may ***increase the brightness of the light sources*** in response to the noise ***to improve the signal-to-noise ratio***." Ex.1011 (Lisogurski), 9:46-52 (emphases added), *see id.*, 37:6-22. Lisogurski explains that the frequency of the light source can be changed for the same reason. Ex.1011 (Lisogurski), 5:57-61, 9:46-51, 35:5-9 ("It will also be understood that the earlier described embodiments relating to varying light output may also apply to sampling rate.").

170. Lisogurski also explains that a dim light signal can be "degraded by quantization noise" due to the analog-to-digital conversion process and increasing the brightness of the light source can improve the signal-to-noise ratio.

> The system may use conventional servo algorithms in part to keep received signal levels within the range of an analog to digital converter's dynamic range. For example, a signal with amplitudes that are large may saturate an analog to digital convertor. In response to a signal with high amplitudes, the system may reduce emitter brightness. In a further example, the quality of a low amplitude signal

> may be degraded by quantization noise by an analog to digital converter. In response, the system may increase the emitter brightness.

Ex.1011 (Lisogurski), 5:65-6:6.

171. For a fixed wavelength, the intensity of a light source is its brightness squared, and consequently, increasing the brightness of a light source also increases its intensity. Therefore, Lisogurski describes increasing the light intensity of that light source, and that doing so improves (increases) the signal-to-noise ratio.

(ii) "by increasing a pulse rate of at least one of the plurality of semiconductor sources from an initial pulse rate"

172. Claims 1 and 7 recite the above limitation, which Lisogurski teaches.

173. A person of ordinary skill in the art would understand that "pulse rate" as used in the claims refers to the number of pulses of light per unit of time. This is consistent with the use of the word "pulse" in the specification.

> Some of the features for selecting a particular light source include power or intensity, wavelength range or bandwidth, spatial or temporal coherence, spatial beam quality for focusing or transmission over long distance, and pulse width or pulse repetition rate.

Ex.1001('484 patent) at 25:66-26:4.

> Also, the LED output may more easily be modulated, and the LED provides the option of continuous wave or pulsed mode of operation.

Ex.1001('484 patent) at 26:29-30.

> For example, the seed LD 2001 may be a distributed feedback (DFB) laser diode with a wavelength near 1542 nm or 1550 nm, with approximately 0.5-2.0 ns pulsed output, and with a pulse repetition rate between one kilohertz to about 100 MHz or more.

Ex.1001('484 patent) at 28:23-26.

174. Typically, the pulse rate would be specified in Hertz (Hz), which is the number of times the LED cycles (*e.g.*, on and off) in 1 second. Other terms for pulse rate include "frequency" and "firing rate."

175. Lisogurski explains that its system can adjust various parameters of light emitted by the LEDs to ensure an adequate signal-to-noise ratio. Ex.1011 (Lisogurski), 9:46-52, *id.*, 37:6-22. These parameters include "drive current or light brightness, duty cycle, [and] ***firing rate***" amongst others. Ex.1011 (Lisogurski), 27:44-52, *id.*, 2:1-2 ("light source firing rate"), 8:29-35, 25:49-55. The firing rate refers to the number of times per second that the light is turned on and off, or equivalently it is one divided by the time of one full cycle (the total period of time of when on and off for one cycle). The duty cycle refers to the percentage of time during one full cycle when the light is on.

176. A person of ordinary skill in the art would understand that the "firing rate" of an LED is the same as the claimed "pulse rate," because both terms refer to the rate or frequency at which the LED is turned on and off. Such a person would

have further recognized that a light source must originally have an initial firing rate ("*initial pulse rate*") so the system can later increase it.

177. Lisogurski uses the term "pulse rate" to refer to the heart rate of a user, Ex.1011 (Lisogurski), 1:22-25 ("determined physiological parameters such as… pulse rate"), and the term "firing rate" to refer the frequency at which the LED blinks, Ex.1011 (Lisogurski), 2:1-2 ("light source firing rate").

178. Lisogurksi describes embodiments where the firing rate of an LED is correlated to the sampling rate of an analog-to-digital converter in the detector. Ex.1011 (Lisogurski), 33:47-49 ("In some embodiments, sampling rate modulation may be correlated with light drive signal modulation."); *see also* 11:43-46, 11:52-55. In those embodiments, where the sampling rate increases, the firing rate of the LED also increases.

> In some embodiments, the sampling rate may represent the amount of time between "on" periods. For example, the time between "on" periods may be the length of time of "off" period 220 of FIG. 2A. Increasing the duration of the "off" periods (i.e., ***decreasing the emitter firing rate***) relates to a decreased sampling rate. Similarly, decreasing the duration of the "off" periods (i.e., ***increasing the emitter firing rate***) relates to an increased sampling rate.

Ex.1011 (Lisogurski), 35:27-31 (emphasis added).

179. Lisogurki's device teaches this claim limitation in two ways.

180. First, Lisogurski explains that increasing the sampling rate "may result in more accurate and reliable physiological information." Ex.1011, 33:56-58. A person of ordinary skill in the art would have understood that an increased sampling rate results in more samples. Such a person would have recognized that increased firing and sampling rates typically improves signal to noise because the additional firing and sampling creates more signal, and allows for additional measurements, and therefor increases the amount of information relative to the noise. It was understood that increasing the firing rate of an LED would typically increase the signal-to-noise ratio of the detected signal. Accordingly, a person of ordinary skill in the art would have thus understood that Lisogurski's device increases its detected signal-to-noise ratio as both the firing and sampling rate increase. Lisogurki's device is thus capable of increasing its SNR by increasing its pulse rate so it satisfies PTAB's construction of this limitation: [a] light source containing two or more light emitting diodes (semiconductor sources), wherein at least one of the light emitting diodes is capable of having its pulse rate increased to increase a signal-to-noise ratio.

181. Lisogurski's "cardiac cycle modulation" also teaches this limitation. Lisogurski describes its "cardiac cycle modulation" as follows:

> The system may generate the light drive signal such that a parameter of the emitted one or more photonic signals varies substantially synchronously with physiological pulses of the subject. For example,

> the system may generate a light drive signal that varies with a period the same as or closely related to the period of the cardiac cycle, thus generating a cardiac cycle modulation.

Ex.1011, 25:46-52.

182. A person of ordinary skill in the art would have understood these disclosures to mean that Lisogurksi's device varies its light drive signal parameters, such as firing rate, to remain "substantially synchronous[] with" a subject's heart rate." Ex.1011, 25:46-49. *see id.*, 25:50-61. Such a person would have further understood these disclosures mean that Lisogurski's "cardiac cycle modulation" causes the device to correlate its firing rate with a subject's heart rate. Such a person would have recognized the device will increase it firing rate whenever a patient subject's heart rate increases. Thus, Lisogurki's device will increase its pulse rate to remain synchronous with a subject's heart rate resulting in an increased signal-to-noise ratio being detected. This also shows Lisogurki's device is capable of increasing its SNR by increasing its pulse rate, which satisfies PTAB's construction.

183. Lisogurski explains that the sampling rate (and therefore the LED firing rate) can be varied for the same reasons that light brightness is varied.

> It will also be understood that sampling rate is one of the components that may be modulated in cardiac cycle modulation as described above. It will also be understood that the earlier described

> embodiments relating to varying light output may also apply to sampling rate.

Ex.1011 (Lisogurski), 35:5-9. With respect to the light output, Lisogurski states that "[t]he system may ***increase the brightness of the light sources*** in response to the noise ***to improve the signal-to-noise ratio***." Ex.1011 (Lisogurski), 9:46-52 (emphases added). Lisogurski states that increasing the sampling rate "may result in more accurate and reliable physiological information." Ex.1011 (Lisogurski), 33:56-58. Such a person would have further recognized that a light source must originally have an initial sampling rate ("*initial pulse rate*") so the system can later increase it. Therefore, Lisogurski explains that the LED firing rate can be increased to increase signal-to-noise ratio.

184. Even if Lisogurski alone does not teach increasing the firing rate of its LEDs to increase the signal-to-noise ratio, it would have been obvious to configure Lisogurski to do so based on Carlson.

185. Lisogurski explains that increasing the signal-to-noise ratio in its system is important, and it indicates that one way this can be done is by increasing the brightness of the light sources it is using. Ex.1011 (Lisogurski), 9:50-52 ("The system may increase the brightness of the light sources in response to the noise to improve the signal-to-noise ratio."). It also explains that one reason to do this is to offset the effect of "noise, patient motion, or ambient light." *Id.*, 9:57-60. This is consistent with the knowledge of the person of ordinary skill in the art, who would

have understood that the quality of measuring a physiological parameter derives ultimately from the quality of the signal being analyzed, and that noise such as ambient light diminishes that signal quality. The person of ordinary skill in the art implementing Lisogurski would have been motivated to look for additional ways of improving the signal-to-noise ratio.

186. Like Lisogurski, Carlson describes techniques for removing noise from a signal, such as noise from ambient sun light. Ex.1009 (Carlson), [0067]-[0069]. Carlson explains that the signal-to-noise ratios in the types of optical sensors used in the Lisogurski systems can be improved by pulsing the LEDs at an increased rate to reduce the effects of ambient light whenever present. Ex.1009 (Carlson), [0067]-[0069]. Carlson teaches that the pulse frequency ("*pulse rate*") is "chosen in such a way that it is outside the frequency spectrum of sunlight and ambient light" and it could be "1000 Hz" or "can be chosen at any other frequency, as e.g. 2000 Hz or even higher." Ex.1009 (Carlson), [0069]; *see id.*, claims 10-11. Based on these disclosures, a person of ordinary skill in the art would have understood Carlson discloses that certain pulse rates would mitigate, or reduce the impact or relative magnitude of noise arising from, environmental sources.

187. Carlson also explains that this environmental noise is transient and temporary, so it is unnecessary to always use the same pulse rate. Ex.1009, [0068]. Because sunlight interference is normally temporary, a person of ordinary skill in

the art would have recognized that its unnecessary to always pulse the light in a way to always mitigate sunlight. Ex. 1009, [0068]. This is why Carlson's device only "temporarily modulate[s]" the LED to shift its frequency outside frequencies where environmental noise occurs. Ex. 1009, [0020]. Carlson also claims such an invention: one that "shifts the frequency of the emitted light" so it is "substantially outside of frequency of noise and/or environmental signals" such as sunlight. Ex.1009 (Carlson), Claims 10-11; *see id*., [0067]-[0069]. This frequency change, when needed, corresponds to increasing the "*pulse rate*" of the emitter whenever sunlight is present to increase "significantly the Signal-to-Noise and Signal-to-Background ratio." Ex.1009 (Carlson), [0069]. A skilled person would have recognized that Carlson's LEDs must have an original operating frequency ("*initial pulse rate*") so the system can later increase it.

188. To the extent that one would argue that Carlson discloses a device that temporarily modulates an LED at certain pulse rate or otherwise remains always on, I disagree with that characterization of Carlson's device. A person of ordinary skill in the art would have recognized that having a light remain on would wastefully consume battery power, which contradicts the express teachings of Carlson, *see* Ex1009, Ex.1009, [0002] (describing "increasing the technical performance… versus environmental disturbances and energy consumption"), [0048]. Moreover, Carlson expressly discloses "shifting the frequency" of an LED

into a higher frequency range, *see* Ex. 1009, [0020], Claims 10-11, so Carlson's device must necessarily have also used a lower frequency range—that is, a lower pulse rate. Based on these disclosures, a person of ordinary skill in the art would have understood Carlson's device to pulse an LED at a low rate and then increase its pulse rate whenever sunlight is present.

189. Even if one were to accept that Carlson discloses a device that pulses its LED at a certain pulse rate when sunlight is present or otherwise the device's LED remains on, such a characterization of Carlson's device would still increase a pulse rate. A person of ordinary skill in the art would have understood that, when a light remains always on, its pulse rate is 0 Hz. Such a person would also have recognized that when a device goes from 0 Hz to the "range of above 1000 Hz" described in Carlson, *see* Ex1009, [0069], that device is necessarily "*increasing its pulse rate*." Accordingly, this mischaracterization of Carlson also discloses the claimed feature.

190. Lisogurski explains that the firing rate of the LEDs can be adjusted in response changes in environmental conditions, such as changes in background noise or ambient light. Ex.1011 (Lisogurski), 1:67-2:3 ("The system may, in response to the external trigger, vary the… light source firing rate"), 5:55-61 ("Conventional servo algorithms may adjust the light drive signals due to, for example, ambient light changes"), 9:46-60 ("the system may alter the cardiac

modulation technique based on the level of noise, ambient light, [or] other suitable reasons…"), 37:6-18 (the system may change the modulation mode if it "detect[s] a change in background noise [or] a change in ambient light"). To the extent Lisogurski does not increase the firing rate (frequency) to increase the signal-to-noise ratio, it would have been obvious to do so based on Carlson. Given that Lisogurski describes various techniques for improving signal-to-noise ratio in different scenarios, the person of ordinary skill in the art would have been motivated to include additional techniques for improving the signal-to-noise ratio into Lisogurski. Carlson describes that increasing the modulation frequency of the pulsed LEDs improves the signal-to-noise ratio. Ex.1009 (Carlson), [0069].

191. Lisogurski could have readily been modified to incorporate the Carlson technique, given that Lisogurski already adjusts the firing rate of the LEDs in response changes in environmental conditions, such as changes in background noise or ambient light. Ex.1011 (Lisogurski), 1:67-2:3, 5:55-61, 9:46-60, 37:6-18. Based on my knowledge and experience, a person of ordinary skill in the art would have been motivated to incorporate additional techniques for improving the signal-to-noise ratio from analogous references. Consequently, a person of ordinary skill in the art would have found it obvious to configure Lisogurski to increase the firing rate (frequency) of LEDs whenever sunlight is present as taught by Carlson, given that Carlson teaches that increasing the modulation frequency of the pulsed LEDs

improves the signal-to-noise ratio. Ex.1009 (Carlson), [0067]-[0069], Claims 10-11. Lisogurki's device, as modified, is thus capable of increasing its SNR by increasing its pulse rate so it satisfies PTAB's construction of this limitation.

192. Based on my knowledge and experience, a person of ordinary skill in the art would have recognized that configuring Lisogurski to increase the signal-to-noise ratio by increasing the LED firing rate was a predictable arrangement of known elements, with each performing the same function it was known to perform and yielding what one would expect from the arrangement. Specifically, and as I explained above, Lisogurski already discloses the device that can vary its pulse rate. Carlson explains why it is predictable to increase a detected signal-to-noise ration by using an increased pulse rate whenever sunlight is present. A person of ordinary skill in the art would have recognized that Lisogurski's device would achieve the same result—namely increasing the SNR of the detected signal—by using Carlson's increased pulse rate whenever light is present.

l) "the detection system further configured to generate a first signal responsive to light received while the light emitting diodes [or semiconductor sources] are off"

193. Claims 1, 7, and 15 recite the above limitation, which Lisogurski teaches.

194. Lisogurski describes a technique for "remov[ing] ambient and background signals" "in addition to or in place of a power saving light modulation scheme." Ex.1011 (Lisogurski), 6:7-10. This technique is called dark subtraction. Ex.1011 (Lisogurski), 13:60, *see generally*, Ex.1011 (Lisogurski), 6:7-19, 13:60-14:10, 16:33-54 (describing dark signal subtraction process). The detectors are used to measure the light when the LEDs are on and when they are off to remove "dark current" or ambient light from the signal. Ex.1011 (Lisogurski), 12:59-13:6 ("The peaks of detector current waveform 214 may be synchronous with light 'on' periods… The valleys of detector current waveform 214 may be synchronous with periods of time during which no light is being emitted by the light source… Since dark current 222 may interfere with accurate determinations of physiological characteristics, dark current 222 may be removed as discussed in more detail below.").

195. When the LEDs are modulated, "the system [may] turn[] on a first light source, followed by a 'dark' period, followed by turning on a second light source, followed by a 'dark' period." Ex.1011 (Lisogurski), 6:12-15. "The system may measure the ambient light detected by the detector during the 'dark' period and then subtract this ambient contribution from the signals received during the first and second 'on' periods." Ex.1011 (Lisogurski), 6:16-19.

196. The detectors and front-end processing circuitry measure the light received by the detectors while the LEDs are off—"dark signal"—by "determining the amount of dark signal during [each] 'off' period 220." Ex.1011 (Lisogurski), 13:67-14:6. To determine the dark signal, each detector "convert[s] the intensity of the received light into an electrical signal." Ex.1011 (Lisogurski), 11:14-16, 13:35-41. Figure 2A of Lisogurski depicts the amount of current used to illuminate the LEDs over time. Figure 2B of Lisogurski depicts the amount of current output by the detector over time. Annotated Figures 2A and 2B below depict that dark signal 222 (also called dark current 222) is measured during dark period 220:

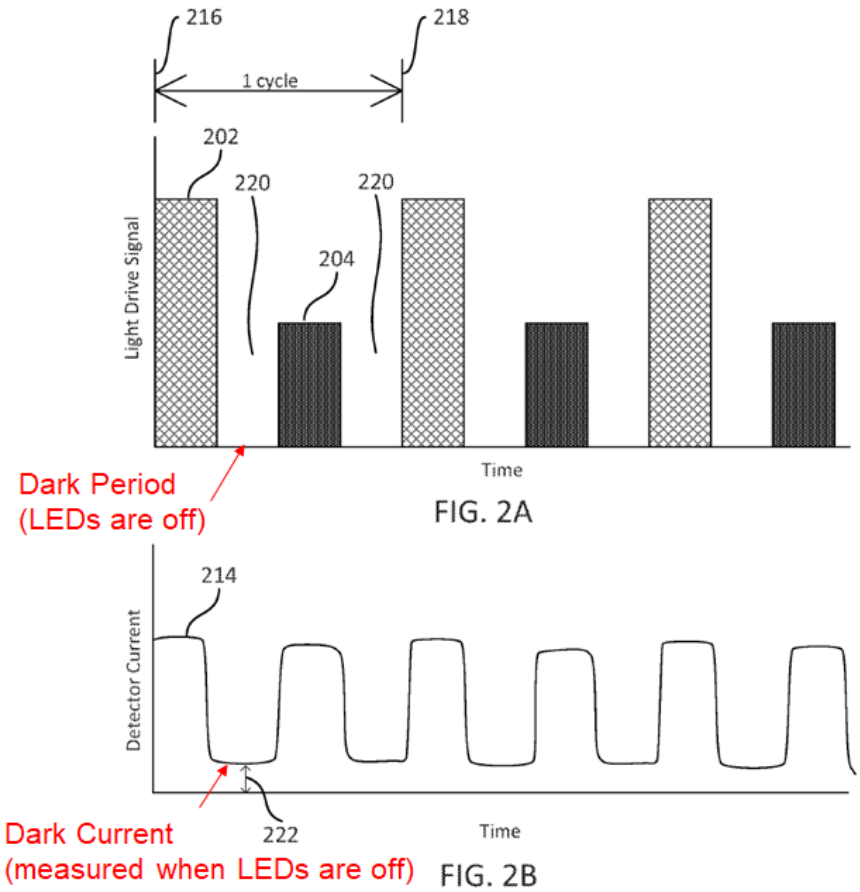

Ex.1011 (Lisogurski), Figs. 2A, 2B, 12:64-13:6; *see id.*, 13:67-14:6 ("in reference to FIG. 2A, a detection signal peak corresponding to red 'on' period 202 may be adjusted by determining the amount of dark signal during the 'off' period 220 preceding red 'on' period 202").

197. The front-end processing circuitry uses the current measured when the LEDs are off to generate a "dark signal." Ex.1011 (Lisogurski), 13:35-41 ("Demultiplexer 156 may operate on detector current waveform 214 of FIG. 2B to generate… a ***first dark signal*** (e.g., corresponding to the dark component that occurs immediately after the Red component), and ***a second dark signal*** (e.g.,

corresponding to the dark component that occurs immediately after the IR component).” (emphasis added)).

198. Accordingly, Lisogurski’s detectors capture light during a dark period (“*while the light emitting diodes are off*”) and to convert that to a dark signal (“*first signal*”).

m) “[the detection system configured] to generate a second signal responsive to light received while at least one of the light emitting diodes [or semiconductor sources] is on”

199. Claims 1, 7, and 15 recite the above limitation, which Lisogurski teaches.

200. In Lisogurski’s dark signal subtraction process, the detectors and front-end processing circuitry also measure the detected light while at least one LED is on: “The system [may] turn[] on a first light source, followed by a ‘dark’ period, followed by a second light source, followed by a ‘dark’ period.” Ex.1011 (Lisogurski), 6:12-15. Lisogurski’s system then subtracts the signals received during the dark period from the signals received when the LEDs are on. Ex.1011 (Lisogurski), 6:16-19 (“The system may measure the ambient light detected by the detector during the ‘dark’ period and then subtract this ambient contribution from the signals received during the first and second ‘on’ periods.”).

201. The light received by the detectors includes "the light that is reflected by or has traveled through the subject's tissue." Ex.1011 (Lisogurski), 17:40-42; 11:12-20 ("In operation, light may enter detector 140 after passing through the subject's tissue. Detector 140 may convert the intensity of the received light into an electrical signal. ***The light intensity may be directly related to the*** absorbance and/or ***reflectance of light in the tissue***. That is, when more light at a certain wavelength is absorbed or reflected, less light of that wavelength is received from the tissue by detector 140.") (emphasis added). This includes the IR light ("*optical beam*") emitted by the LEDs. Ex.1011 (Lisogurski), 13:67-14:2 ("a detection signal peak corresponding to red 'on' period 202"), 17:8-10 ("the levels received during… IR 'on' period 278."), 13:35-41.

202. As depicted in annotated Figures 2A and 2B below, Lisogurski's system measures a red signal, Ex.1011 (Lisogurski), 13:67-14:2 ("a detection signal peak corresponding to red 'on' period 202") and an IR signal, Ex.1011 (Lisogurski), 17:8-10 ("the levels received during… IR 'on' portion 290."), 11:14-16 (each detector "convert[s] the intensity of the received light into an electrical signal"), 13:35-41 ("Demultiplexer 156 may operate on detector current waveform 214 of FIG. 2B to generate ***a Red signal*** [and] ***an IR signal***…") (emphasis added).

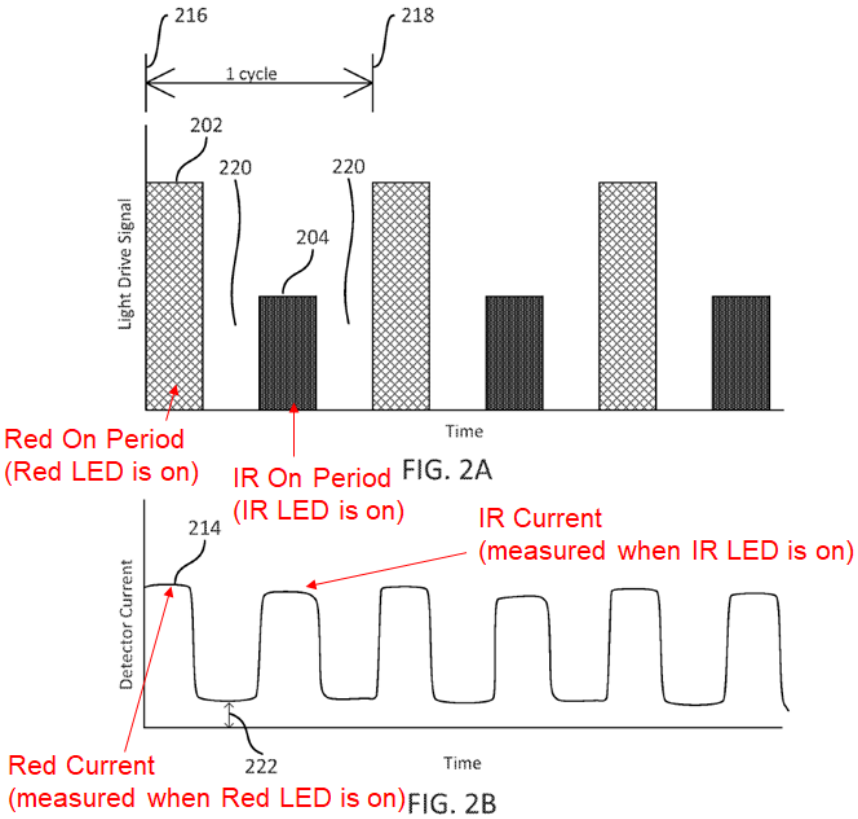

Ex.1011 (Lisogurski), Figs. 2A & 2B, 12:52-13:6. Thus, Lisogurski's detectors capture light when the IR LED(s) is on ("*while at least one of the light emitting diodes is on*") and convert that to an electrical signal ("*second signal*").

n) "[the detection system configured to] increase the signal-to-noise ratio by differencing the first signal and the second signal"

203. Claims 1, 7, and 15 recite the above limitation, which Lisogurski teaches.

204. As explained above, Lisogurski's "[d]ark subtractor 162 may operate on the digital signal." Ex.1011 (Lisogurski), 13:60, 11:43-46, 33:65-34:13, *id.*,

13:35-41. Thus, the analog-to-digital converter converts the dark signal and the IR signal into digital form before the dark subtractor operates on the signals.

205. The ambient light in the dark signal is noise. Ex.1011 (Lisogurski), 14:46-55 (discussing "ambient light noise" in the analog signals). Thus, the dark signal subtractor subtracts the digital dark signal from the digital IR signal to generate an "adjusted… IR signal[]":

> [D]ark subtractor 162 may subtract dark values from the Red and IR components to generate adjusted Red and IR signals. For example, dark subtractor 162 may determine a subtraction amount from the dark signal portion of the detection signal and subtract it from the peak portion of the detection signal in order to reduce the effect of the dark signal on the peak. For example, in reference to FIG. 2A, a detection signal peak corresponding to red "on" period 202 may be adjusted by determining the amount of dark signal during the "off" period 220 preceding red "on" period 202. The dark signal amount determined in this manner may be subtracted from the detector peak corresponding to red "on" period 202.

Ex.1011 (Lisogurski), 13:60-14:10, 16:51-54 ("The system may subtract the background or dark level from the levels received during red 'on' portion 274 and IR 'on' period 278."). Accordingly, Lisogurski discloses subtracting ("*differencing*") the dark signal ("*first signal*") from the IR signal ("*second signal*").

206. The signal-to-noise ratio is calculated by dividing the signal power by the noise power: $\frac{S}{N}$. Decreasing the noise necessarily increases the signal-to-noise ratio. Thus, by removing noise (ambient light) from the light signal, the dark signal subtraction process increases the signal-to-noise ratio of the claimed signal.

5. Claim 17

207. Claim 17 depends on claim 15 above and further recites "*wherein a detector output from at least one of the plurality of spatially separated detectors is coupled to an amplifier having a gain configured to be adjusted to improve detection sensitivity.*"

208. As I explained above (*see* § a.A.1.g) *above*), Lisogurski teaches this limitation.

B. Lisogurski, Carlson, and Tran Render Obvious Claims 1-4, 7-12, and 15-22

As I explained above, Lisogurski and Carlson, render obvious all of the elements of claims 1, 7, 15, and 17. Dependent claims 2-4, 8-12, 16, and 18-22 are obvious over Lisogurski and Carlson in further view of Tran. To the extent the one argues that Lisogurski does not teach a smart phone or tablet as specified in claims 1, 7, and 15, that element is obvious based on Tran.

1. Overview of Tran

209. Tran discloses a heart monitoring system for a patient that uses a statistical analyzer to monitor patient health. Ex.1064, Abstract, Fig. 1, 8:28-53. The patient wears a monitoring device, such as a wrist-watch or clip-on device, that communicates a patient's health information to a server that passes it to a statistical and data driven analyzers. Ex.1064, 8:44-53; 9:23-54, 11:1-31, 54:14-57:13. The wristwatch can be used with a smart phone to allow data to be collected and transmitted when a patient is away from home. Ex.1064, 34:9-31; *see id.*, 33:50-34:40. Such monitored health information includes pulse oximetry values. Ex.1064, 25:36-43, 26:17-29, 36:62-37:13, 46:25-42, 60:58-61:37, 74:29-67. These analyzers, for example, help "track a patient's risk of stroke or heart attacks." Ex.1064, 54:35-36. To do so, the analyzers use "artificial neural networks," a form of machine learning or artificial intelligence, to help classify potential risks to warn patients or health-care providers. Ex.1064, 22:24-28, 74:45-46, 75:18-20, 94:57-65.

2. A Person of Ordinary Skill in the Art Would Have Modified the combination of Lisogurski and Carlson to Incorporate Elements Shown in Tran

210. A person of ordinary skill in the art would have considered making modifications to the combined system of Lisogurski and Carlson, as I described

above (*see* §VII.A.3-4), based on the disclosures of Tran. Such a person would have multiple reasons for doing so.

211. First, and as I described above (*see* § IV.B), market trends would have motivated a person of ordinary skill in the art reading Lisogurki (and Carlson) to find additional ways to use data collected from Lisogurski's device to identify any health issues. Tran provides such a way by using, for example, "artificial neural networks" to analyze data. Ex.1064, 22:23-28. A person of ordinary skill in the art would have recognized that Tran's data analysis technique would allow a patient to be monitored by remote services and increase the accuracy over conventional data analysis techniques, like those used in Lisogurski. Market trends alone would have motivated such a person to use Tran's data analysis technique with Lisogurski's device.

212. Second, Tran provides express reasons that would have motivated a person of ordinary skill in the art to further modify the combination Lisogurski and Carlson. Tran explains that his data analysis technique "allows patients to conduct a low-cost, comprehensive, real-time monitoring of their blood pressure." Ex.1064, 4:44-45. As another reason, Tran explains that his data analysis technique "provides an in-depth, cost-effective mechanism to evaluate a patient's cardiac condition." Ex.1064, 5:5-6. Tran's technique allows for "[c]ertain cardiac conditions can be controlled, and in some cases predicted, before they actually

occur." Ex.1064, 5:6-7. These reasons would have motivated a person of ordinary skill in the art to incorporate Tran's data analysis technique with the combined system of Lisogurski and Carlson.

213. Lisogurki's device and Tran's artificial neural networks are already configured to work together. Tran's data is gathered from pulse oximetry devices like those described in Lisogurski. *Compare* Ex.1064, 36:62-37:13 *with* Ex.1011, 10:48-64. Likewise, Lisogurski's devices were already configured to communicate with external devices, such as Tran's artificial neural networks. *See* Ex.1011, 15:43-65 (explaining Lisogurski's device was already capable to communicate with servers over a network), 18:58-65 (same). Accordingly, a person of ordinary skill in the art would have recognized that both devices would have required minimal effort to modify Lisogurki's device to work with Tran's artificial neural networks.

214. Lisogurski, Carlson, and Tran are also analogous references, each describing techniques for using measurements taken by optical sensing devices, such as pulse oximeters. Lisogurski, Carlson, and Tran are all analogous art to the '484 patent because each describes wearable devices that non-invasively monitor a subject's vital signs or physiological signals. Ex.1001, 2:57-59 ("Thus, there is an unmet need for non-invasive glucose monitoring (e.g., monitoring glucose without drawing blood)."); Ex. 1011 (Lisogurksi), 1:4-6, Ex.1009

(Carlson), Abstract, Ex.1063 (Tran), Abstract. Moreover, these references are also analogous for being reasonably pertinent addressed by the inventor of the 484 patent. Ex.1001, 2:59-60 ("The challenge has been that a non-invasive system requires adequate sensitivity and selectivity, along with repeatability of the results."); Ex.1011 (Lisogurksi), 9:46-53, Ex.1009 (Carlson), [0010], Ex.1063 (Tran), 5:5-10. The skilled person would have considered the references together when implementing a system based on Lisogurski's teachings.

3. Claims 1, 7, 15, and 17

215. Claims 1, 7, and 15 specify that the wearable device work with a "*smart phone or tablet*." Claim 17 depends from 15, and is otherwise taught by Lisogurski and Carlson.

216. As I explained above, Lisogurski describes the monitor as a computing device that can be portable, battery-powered, and have a touchscreen, and it is my opinion that a skilled person would have recognized a tablet computer or a smartphone are examples of such a device. My opinion is further supported by Tran, which shows using the smart phone with a portable, wearable sensor allows data to be sent to remote devices even when the person wearing it is away from home. Ex.1064, 34:4-25. Doing so would allow for the detection of emergency situations or potential problems when person is engaged in daily activities. Ex.1064, 33:58-34:3, 34:25-40. A person of ordinary skill would have

recognized Lisogurski's monitor could be implemented to use or include a smartphone as described in Tran, and that doing so would have allowed Lisogurski's monitor to remain in contact with other monitoring devices (*e.g.*, multi-parameter physiologic monitor 326) even when the person wearing it was outside of the range of a WiFi or other home network. As I explained above, (*see* §IV.B), it was well-known in 2012 that tablets and smartphones could be used in mobile sensor systems, and there was a general trend in the industry to develop such devices. A person of ordinary skill in the art considering Lisogurski, Carlson, and Tran would have found it obvious to implement Lisogurski's monitor as a smartphone as shown in Tran.

4. Claims 2, 10, and 18

217. Claims 2, 10, and 18 depend on claims 1 and 15, respectively, and recite "*wherein the wearable device is configured to use artificial intelligence [in making decisions associated with / to process] at least a portion of the output signal*." Lisogurski teaches these limitations.

218. Tran's data analysis technique uses data gathered from a patient, such as data measured by "wearable patient monitoring appliances," *see* Ex.1064, 9:23-53, Once collected, Tran's system "feeds the data to a statistical analyzer such as a neural network…." Ex.1064, 11:6-30; *see id.*, 3:6-13. Tran's data driven analyzers may incorporate "engineered (artificial) neural networks," which is a

form of "*artificial intelligence*." Ex.1064, 22:24-30. By doing so, Tran's neural networks analyze patient data to "flag potentially dangerous conditions," Ex.1064, 11:6-8, which "can be specified as an event or a pattern that can cause physiological or psychological damage to the patient," Ex.1064, 11:16-19. Tran explains that when such conditions occur, the system "displays a warning to a patient and connects the patient to the appropriate emergency response authority." Ex.1063, 87:33-37; *see id*., 85:60-61, 88:48-50,90:58-61.

219. A skilled person would have been motivated to use Tran's neural networks and associated techniques in Lisogurski's device to improve the processing of the collected physiological signals ("at least a portion of the output signal"). Such a combination of Lisogurki, Carolson and Tran would result in Lisogurski's device sending its patient data ("*at least a portion of the output signal*") to Tran's neural networks for processing using Tran's data analysis technique. Further, this combination would result in the Lisogurksi's "*wearable device*" using Tran's neural networks, a form of "*artificial intelligence*," to process patient data to flag dangerous conditions. If such conditions occurred, Lisogurki's device, as modified, would warn ("*making [a] decisions*") the patient of these dangerous conditions.

5. Claims 3, 8, and 16

220. Claim 3 and 16 depend on claims 2 and 15, respectively, and recite "*wherein the wearable device is at least in part configured to identify an object, and to compare a property of at least some of the output signal to a threshold*." Claim 8 depends on claim 7 and recites the same, except specifies that the wearable device or smart phone or tablet performs the comparison.

221. Lisogurski teaches that its sensor can detect when it has fallen off. Ex.1011, 36:66-37:2 ("the system may detect a signal indicative of a system error such as… a probe-off signal"). Thus, Lisogurski's sensor can identify when an object (e.g., a wrist or an ear) is in range of the sensor ("*the wearable device is at least in part configured to identify an object*").

222. Lisogurski discloses comparing the detected signals to a variety of thresholds. For example, Lisogurski states that "the blood oxygen saturation may be compared to a threshold or target value, such as threshold 830," Ex.1011, 24:41-43, and the outcome may be used to change the device's mode of operation, Ex.1011, 24:43-57. Lisogurski also compares the output signal to thresholds to identify portions of the signal that may be of interest for further processing or that could be used to change the light source modulation. Ex.1011, 40:42-41:39, claims 15-18. Lisogurski's system also can detect increases in ambient light and background noise, and change modulation techniques in response. Ex.1011, 9:46-

52, 37:8-14. A person of ordinary skill would have understood Lisogurski's process to include comparing the detected signal to a threshold to determine when the noise level has changed.

223. Similarly, Tran's data analysis technique allows the user to choose "a condition that they would like to be alerted to and by providing the parameters (e.g., threshold value for the reading) for alert generation." Ex.1064, 27:53-56. If such a condition is met, the user receives an alert according to their set preference. Ex.1064, 27:26-28. A person of ordinary skill in the art would have understood Tran's disclosures to mean that the measurement device compares its measured data against this user defined threshold.

6. Claims 9

224. Claim 9 depends on claim 8 above and further recites "*wherein a detector output from at least one of the plurality of spatially separated detectors is coupled to an amplifier having a gain configured to be adjusted to improve detection sensitivity*."

225. As I explained above (*see* § a.A.1.g) *above*), Lisogruski teaches this limitation.

7. Claims 11 and 19

226. Claims 11 and 19 depend from claims 10 and 18, respectively, and recite the AI includes "*pattern identification or classification*" or "*a pattern matching algorithm*." Lisogurski teaches these limitations.

227. Tran explains that neural networks are "used to recognize each patterns as the neural network is quite robust at recognizing user habits or patterns." Ex.1064, 23:40-42; *see id.*, 23:39-50. Specifically, Tran further explains that it uses these neural networks to analyze "a patient's vital signs." Ex.1064, 11:1-8; *see id.*, 9:23-54. Patterns in these vital signs are flagged if they represent possible dangerous conditions. Ex.1064, 11:16:19; 23:39-50 ("a neural network is used to recognize each pattern as the neural network is quite robust at recognizing user habits or patterns"), 12:4-16. Tran also explains that its data analysis technique also includes a Hidden Markov Model to "derive a set of reference pattern templates, each template is representative of an identified pattern in a vocabulary set of reference treatment patterns." Ex.1064, 24:45-18; *id.*, 80:24-81:3. Tran shows both the neural network and Hidden Markov Model (HMM) can be used: "[t]he addition of a neural network at the front end of the HMM in an embodiment provides the capability of representing states with dynamic values." Ex.1063, 24:58-60. Accordingly, a person of ordinary skill would have understood

Tran's neural network and HMM are a "*pattern matching algorithm*" and they perform "*pattern identification or classification*."

8. Claims 4, 12, 21 and 22

228. Claims 4, 12, and 21 depend on claims 3, 10, and 15, respectively, and recite "*wherein the wearable device is configured to perform pattern identification or classification based on at least a part of the output signal*." Claim 22 depends on claim 21 and further recites "*wherein the pattern identification or classification comprises a pattern matching algorithm….*"

229. As I explained above for claims 11 and 19, and as modified, Tran's neural network and HMM use "pattern identification or classification" and "a pattern matching algorithm." Thus, Lisogurski, Carlson, and Tran teach these same elements in claims 4, 12, 21, and 22.

9. Claims 20

230. Claim 20 depends on claim 18 and recites "*wherein the artificial intelligence comprises spectral fingerprinting*."

231. Tran discloses that its neural networks analyze patient's blood oxygen saturation. Ex.1063, 11:1-8, 36:61-37:12. Blood oxygen saturation is determined by measuring the ratio of oxygenated to unoxygenated hemoglobin in a person's blood. Ex.1064, 52:31-35, 37:2-13. This uses a form of spectral fingerprinting by measuring the blood's absorbance or reflectance of different wavelengths of light

to determine how much oxygenated hemoglobin and unoxygenated hemoglobin is present. Ex.1064, 37:2-13, 50:10-15. Accordingly, Tran's neural network includes "*spectral fingerprinting*."

C. Lisogurski, Carlson, Tran, and Isaacson Render Obvious Claims 5 and 13

232. As I explained above, Lisogurski in combination with Carlson renders claims 4 and 12 obvious. To the extent that one may contend that these references do not teach LEDs and photodetectors with the distance requirements of claims 5 and 13. Even if this distinction were accepted, a person of ordinary skill would still determine that those claims are obvious over Lisogurski, Carlson, and Tran in further combination with Isaacson.

1. Overview of Isaacson

233. Isaacson describes a sensor for use in pulse oximetry systems, Ex.1063 (Isaacson), 2:57-58, 2:63-66, 6:32-34, that is designed to measure the blood constituents and properties at different depths or layers of tissue, Ex.1063 (Isaacson), 4:35-49. Isaacson describes using his sensor in several body locations, such as on the arm or finger, however most of the description of the sensor is in the context of a cerebral oximeter system. Ex.1063 (Isaacson), 2:63-65, 3:66-4:3. The same basic principles apply irrespective of which body location is used. Isaacson's sensor includes two emitters and two detectors that are separated by varying

distances, with the distances corresponding to the different depths of tissue to be examined. Ex.1063 (Isaacson), 1:21-40. The emitters can be LEDs. Ex.1063 (Isaacson), 3:44-45. Isaacson explains that the emitters can emit multiple wavelengths (e.g., the same set of wavelength), Ex.1063 (Isaacson), 3:45-49, or the first emitter can be configured to emit one wavelength, and the second emitter can be configured to emit a different wavelength, Ex.1063 (Isaacson), 3:52-54.

234. The distances between the detectors are selected to allow measurement of light penetrating different depths of tissue, and the distances are symmetrical between the two LEDs. Ex.1063 (Isaacson), 1:41-45, 5:10-15. The first emitter is separated from the first detector by a short path and from the second detector by a long path. Ex.1063 (Isaacson), 1:28-34. The second emitter is separated from the second detector by a short path and from the first detector by a long path. Ex.1063 (Isaacson), 1:34-40. The lengths of the two short paths are approximately equal, and the lengths of the long paths are approximately equal. Ex.1063 (Isaacson), 4:63-5:15.

235. Figure 1, which I have annotated below, depicts the arrangement of the sensor. The emitters (10 and 20) are in red, detectors (12 and 22) in blue, the long distances/paths (14A&B and 16A&B) in green, and the short distances/paths (24A&B and 26A&B) in yellow:

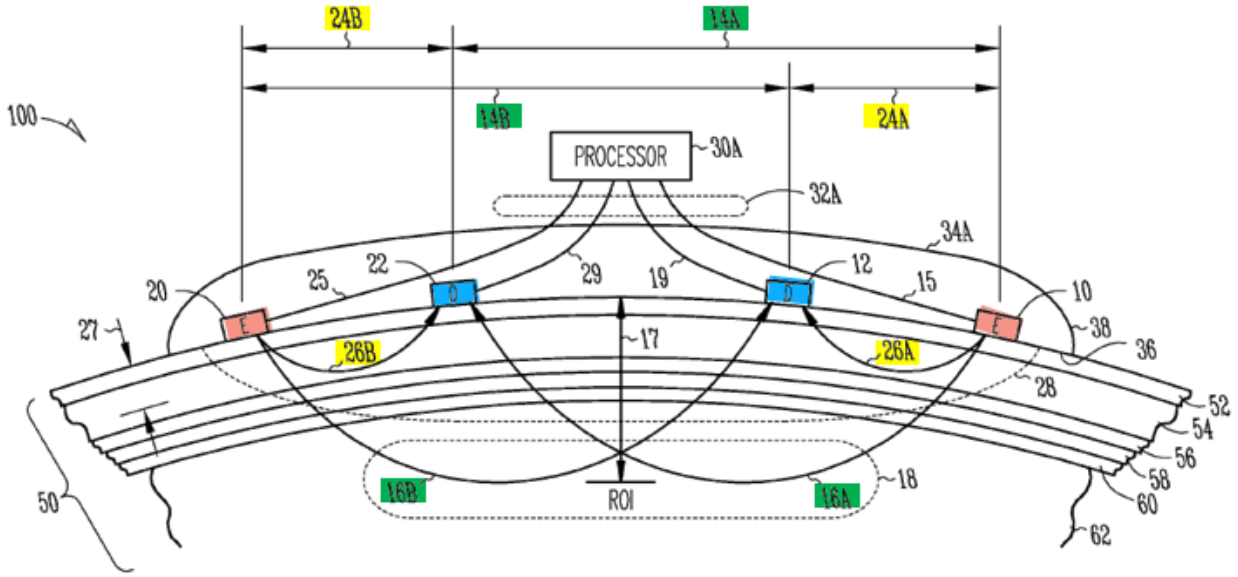

Fig. 1

236. The different separation distances and resulting path lengths allow measurements to be taken at different depths or layers of the tissue. Ex.1063 (Isaacson), 5:10-15. The short path lengths (26A&B) traverse exclusion region 28, shown in yellow below, on the surface of the tissue. The long path lengths (16A&B) traverse region of interest 18, shown in green below.

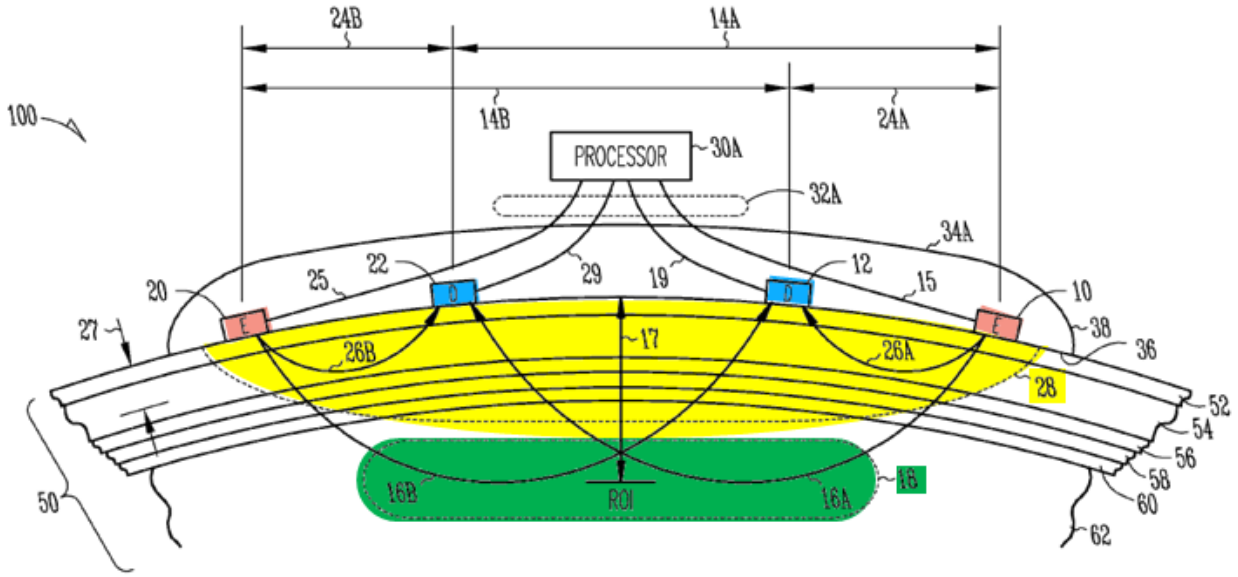

Fig. 1

237. As Figure 1 shows, the long paths (16A&B) pass through both the exclusion region 28 and the region of interest 18. Therefore, the measurements taken on the long path include light that has passed through both the exclusion region and the region of interest, and any measurement would include both regions. Isaacson explains that the measurements of the short paths can be used to remove any contributions from the exclusion region 28 to the long path measurement, and that this can be done by "using an algorithm in which the optical absorbance corresponding to the short paths is subtracted from the optical absorbance corresponding to the long paths." Ex.1063 (Isaacson), 7:59-60. The result would be a measurement that more accurately reflects the conditions in the region of interest.

2. A Person of Ordinary Skill In the Art Would Have Modified the combined system of Lisogurski, Carlson, and Tran to Incorporate Elements Shown in Isaacson

238. As I explained, *see* §§ VII.A.3, VII.B.2, a skilled person reading Lisogurski (as well as Carlson and Tran) would have looked to other references that disclosed additional techniques for improving the operation of optical sensing systems.

239. Lisogurski generally describes a PPG system that is designed to optimize power consumption. Ex.1011 (Lisogurski) at 1:4-6, 3:50-53. Lisogurski's system allows "for increased battery life in portable systems or for increased portability." Ex.1011 (Lisogurski) at 1:16-18. Lisogurski describes several techniques for increasing the signal-to-noise ratio of the signals measured by its devices while minimizing power consumptions. Ex.1011 (Lisogurski) at 9:46-52, 14:50-55, 37:8-11.

240. Lisogurski states that its sensor can include multiple LEDs, where the LEDs are the same wavelength or of different wavelengths, and that the sensor can further include multiple detectors. Ex.1011, 10:58-64. Lisogurksi states that the detectors can be spaced apart, and that Lisogurski states that "[a]ny suitable configuration" of sources and detectors may be used. Ex.1011, 17:39-45. Lisogurski does not provide further guidance on how to space the LEDs and detectors from each other. There were many well-known principles that apply to

determining appropriate configurations for use with a particular device. A skilled person would have considered these principles and other sensor configurations that were known in the field. That person would have looked to references that described those.

241. Based on my knowledge and experience, a person of ordinary skill in the art reading Lisogurski would have considered other references that explained techniques for improving the operation of portable optical sensing systems, particularly those describes how to arrange multiple light sources and multiple detectors in order to increase error tolerance with redundancy and improve signal to noise ratio by having multiple measurements. Such a person would recognize that improvements to these systems involve trade-offs, such as adding a sensor component to improve detection could also increase the size of the device. It was part of the ordinary design process to characterize the positive and negative attributes of the many ways to improve the operation of a device by comparing, and selecting or combining, different designs and techniques.

242. Based on my knowledge and experience, a person of ordinary skill in the art would have looked to Isaacson, which describes how to arrange multiple light sources and multiple detectors in pulse oximetry devices. Ex.1063 (Isaacson), 1:21-26, 4:64-5:15. As was generally known, Isaacson states that is beneficial to measure the oxygen saturation at particular layers or depths of biological tissue.

Ex.1063 (Isaacson), 2:47-52. Isaacson's arrangement and technique for extracting information is beneficial because it allows measurements to be focused on deeper layers of tissue, and to exclude contributions from surface or less deep regions. Ex.1063 (Isaacson), 1:46-51, 7:59-62; see id., 6:43-45. It was well-known in the field that it was "desirable to know the arterial oxygen saturation of a particular tissue layer or range of tissue layers as opposed to knowing only a general average arterial oxygen saturation value for all layers." Ex.1008 (Mannheimer), 1:47-52.

243. The skilled person also would have been led to Isaacson because Lisogurski recognizes that light is attenuated differently depending on the tissue, and that skin pigmentation in particular can have an adverse effect on signal quality. Ex.1011 (Lisogurski), 19:42-50 ("The interaction of the emitted light with the subject may cause the light to become attenuated… [T]he attenuation or the light may depend on… the tissue with which the light interacts."), 44:43-48 ("The red waveforms may be 25% of the intensity of the IR waveforms, as may occur in patients with dark skin pigmentation"). The skilled person would have recognized that Isaacson describes a solution to this problem by using detectors spaced different distances from an emitter to remove interference from skin by measuring signals that have passed through different depths of tissue. Ex.1063 (Isaacson), 7:59-62, Fig. 1.

244. As I explained above, *see* §§ VII.A.3, VII.B.2, Lisogurski, Carlson, and Tran are analogous references to the ’484 patent.

245. Lisogurski and Isaacson are analogous references to the ’484 patent for similar reasons. Like the ’484 patent, both are directed toward the same field of endeavor—pulse oximetry devices having the same applications (*e.g.*, monitoring of physiological characteristics of a person). *See* Ex. 1001, 13:2-5 (monitoring blood constituents using light), 14:24-30 (same), 18:57-19:54; Ex.1011 (Lisogurski) at 4:15-20, 17:51-58 (describing improvements in a system that includes a wearable sensor, e.g., one worn on a wrist); Ex.1063 (Isaacson), 3:26-27, 3:44-45, 4:1-3 (describing a wearable sensor that can include multiple LEDs). Both references are also analogous for being directed toward a problem facing the inventor of the 484: finding a “detection system [that] may be able to reject background or spurious signals and increase thee signal-to-noise ratio of the measurement. Ex.1001, 25:4-6; *see* Ex. 1011 (Lisogurski), 9:46-52; 5:57-61, 9:57-60, 14:49-55, 35:5-9; Ex. 1063 (Carlson), 7:59-62 (subtracting optical noise caused from tissue in short path).

246. Isaacson states that its arrangement can be used in sensors applied to various portions of the body, such as one pressed against the arm. Ex.1063 (Isaacson), 4:1-3. Isaacson also states that its sensor can be wireless and wirelessly transmit the detected signals for another device for processing. Ex.1063 (Isaacson),

3:26-27. A person of ordinary skill would have recognized that Isaacson is compatible with Lisogurski, which discloses that its wireless sensor can be applied to various locations, including in locations on the arm such as the wrist. Ex.1011 (Liso), 4:15-20, 17:55-59. Based on my knowledge and experience, it is my opinion that a person of ordinary skill in the art would have considered the references together when implementing Lisogurski's system.

3. Claims 5 and 13

247. Claims 5 and 13 depend from claims 4 and 12, respectively, and specify the device includes at least two detectors, with each detector being a different distance from one LED:

> *wherein* ***at least one of the spatially separated detectors*** *is located at a first distance from* ***at least one of the light emitting diodes*** *and* ***at least another of the spatially separated detectors*** *is located at a second distance from* ***the at least one of the light emitting diodes****, and the at least one of the spatially separated detectors is configured to generate a third signal responsive to light from the at least one light emitting diode and the at least another of the spatially separated detectors is configured to generate a fourth signal responsive to the light from the at least one of the light emitting diodes.*

Claims 5 and 13 additionally specify that the device includes two LEDs (a "first" and "second" LED), with each LED being a different distance from a detector:

wherein ***at least one of the spatially separated detectors*** *is located at a third distance from* ***a first one of the light emitting diodes*** *and at a fourth distance from* ***a second one of the light emitting diodes****, and is configured to generate a fifth signal responsive to light from the first light emitting diode and a sixth signal responsive to light from the second light emitting diode, and wherein the first distance is different from the second distance, and the third distance is different from the fourth distance.*

248. Lisogurski states that "[a]ny suitable configuration" of sources and detectors may be used, Ex.1011 (Lisogurski), 17:39-45, and leaves the selection of a suitable configuration as a design choice to the person implementing the system. As I explained above, (*see* § VII.C.2) a skilled person would have looked to references describing such configurations and would have considered Isaacson on how to arrange multiple emitters and detectors.

249. Isaacson discloses a sensor that includes at least two emitters such as LEDs and at least two photodetectors where the detectors have different spacing from each emitter to allow the sensor to make measurements on different layers of tissue. Ex.1063 (Isaacson), 1:27-40, 1:46-50, 1:54-58. That sensor is shown in Isaacson Figure 1, which I have annotated, and shows emitters 10 and 20 (red) on the outside, and detectors 12 and 22 (blue) on the inside.

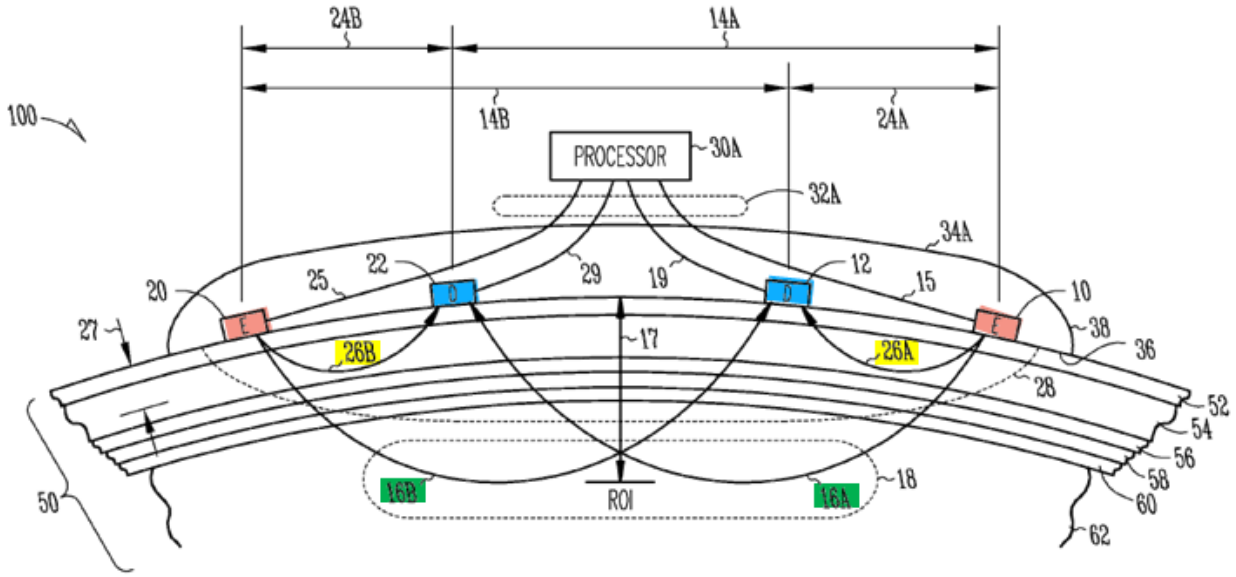

Fig. 1

250. Isaacson states that emitter 10 can be configured to emit one wavelength of light and emitter 20 can be configured to emit a different wavelength of light. Ex Ex.1063 (Isaacson), 3:52-54, 6:37-39. In Lisogurski's system, a person of skill would configure one emitter (*e.g.*, emitter 20) to emit an IR wavelength and the other (*e.g.*, emitter 10) to emit a red wavelength. The skilled person would have made these emitters LEDs, as they are low power and appropriate for wearable applications.

251. Isaacson explains that each detector captures light emitted from both LEDs after the light is reflected off a patient: detector 22 receives light (26B, yellow) from emitter 20 and light (16A, green) from emitter 10 and detector 12 receives light (16B, green) from emitter 20 and light (26A, yellow) from emitter 10. Ex.1063 (Isaacson), 4:35-49, 6:21-29; *see id.*, 1:27-40. Isaacson then explains

that these signals are used to remove the contribution of light from surface regions. Ex.1063 (Isaacson), 1:46-51, 7:59-62.

252. Lisogurski pulses its LEDs, and each pulse of light is a different reflected portion of the emitted light. Ex.1011, 6:12-15, 8:16-23, Fig. 2A. As Isaacson explains and a skilled person would have understood, when light leaves an emitter (*e.g.*, a pulse of light) the photons follow different paths through the tissue due to scattering and other optical effects. Ex.1063, 4:52-54. Each pulse emitted from the LED would travel through a slightly different path, and would be a different reflected portion of the emitted light. Therefore, in the combined system, each line (16A&B and 26A&B) in Isaacson represents multiple pulses of light. Ex.1063, 4:50-57 (the paths "represent a mean path by which light traverses biological tissue").

253. This sensor would generate several signals based on the light emitted from each emitter and detected by each detector. As shown in Figure 1 above, emitter 20 ("*one [LED]*") is at a "*first distance*" from detector 12 ("*one… detector*") and at a "*second distance*" from detector 22 ("*another… detector*"), where the first distance is different than the second distance. Detector 12 ("*one… detector*") generates "*a third signal*" from light 16B from emitter 20 ("*one [LED]*"). And detector 22 ("*another… detector*") generates "a fourth signal" light

26B from emitter 20 ("*one [LED]*"). Where emitter 20 is an IR source, both of these signals are IR light.

254. Further, and as shown in Figure 1 above, detector 12 ("*one… detector*") is at a "*third distance*" from emitter 20 ("*first… [LED]*") and at a "*fourth distance*" from emitter 10 ("*second… [LED]*"), where the third distance is different than the fourth distance. Detector 12 ("one… detector") generates "*a fifth signal*" from light 16B from emitter 20 ("first… [LED]") (emits IR light). And detector 12 ("*one… detector*") generates "*a sixth signal*" light 26A from emitter 10 ("second… [LED]") (emits red light). Where emitter 20 is an IR source, the fifth signal is IR light. Where emitter 10 is a red source, the sixth signal is red light.

255. Thus, the combination of Lisogurski, Carlson, Tran, and Isaacson teaches this element.

D. Lisogurski, Carlson, Tran, Isaacson, and Valencell Render Obvious Claims 6, 14, and 23

256. As I explained above (*see* §§VII.A.4-VII.A.7), Lisogurski in combination with Carlson, Tran, and Isaacson renders obvious all of the elements of independent claims 1, 7, and 15 and dependent claims 2-5 and 8-13. A person of ordinary skill would have found claims 6, 14, and 23 to be obvious over the combined system of Lisogurski, Carlson, Tran, and Isaacson in further view of Valencell-093, as explained below.

1. Overview of Valencell-093

257. Valencell-093 describes an optical sensor that can measure heart rate and blood constituents of the user such as blood oxygen level, and cholesterol, among many others. Ex.1005 (Valencell), [0006], [0050], [0090], [0109]. Valencell-093 also explain that its objective is "to teach how to make a wearable monitor, such as an earbud monitor, that may provide accurate information on physiological conditions ***in the midst of environmental noise, such as noise from ambient light and/or sunlight***." Ex.1005 (Valencell), [0112].

258. Valencell-093 teaches incorporating the optical sensor into a several types of devices including wristband and a headband. Ex.1005 (Valencell), [0050], [0150], Fig. 23. It explains the sensor can be surrounded by a light guiding region to "help[] direct light to and/or from the sensor module [] and a blood flow region within the body part." Ex.1005, [0152]. It can include a "reflector, such as a metal, metallic alloy…, [or] reflective plastic." Ex.1005 (Valencell), [0152].

2. A Person of Ordinary Skill In the Art Would Have Modified Lisogurski and Carlson to Incorporate Elements Shown in Valencell

259. As I explained above (*see* ¶82), Lisogurski, Carlson and Tran are concerned with analogous miniaturized wireless puloximetry devices having the same applications (*e.g.*, mobile monitoring of pulse and other physiological characteristics of a person). Valencell-093 similarly describes analogous systems

with common applications and utility; both describe techniques for improving the power consumption of wearable optical sensing devices while improving their performance and utility. Ex.1005, [0003], [0006], [0012].

260. Lisogurski discloses a PPG system that is designed to optimize power consumption. Ex.1011 (Lisogurski), 1:4-6, 3:50-53. Its system allows "for increased battery life" "or increased portability." Ex.1011 (Lisogurski), 1:16-18. For example, Lisogurski's techniques improve oximeters by reducing power requirements, allowing for smaller devices or longer life. Ex.1011 (Lisogurski), 4:63-67. Lisogurski describes these improvements in a system that includes a wearable sensor, *e.g.*, one worn on a wrist. Ex.1011 (Lisogurski), 4:15-20, 17:51-58. Lisogurski teaches several techniques for increasing the signal-to-noise ratio of measured signals while minimizing power consumption. Ex.1011 (Lisogurski), 9:46-52.

261. Based on my knowledge and experience, a person of ordinary skill in the art reading Lisogurski would have considered other references that explained techniques for achieving the same objectives, particularly those used with wearable sensors. Such a person would recognize that improvements to these systems involve trade-offs, such as adding a sensor component to improve detection could also increase the size of the device. It was part of the ordinary design process to characterize the positive and negative attributes of the many ways to improve the

operation of a device by comparing and selecting or combining, different designs and techniques.

262. Based on my knowledge and experience, a person of ordinary skill in the art would have looked to Valencell-093 (Ex.1005), which is a reference that describes techniques for improving pulse oximetry devices by improving both signal measurement and energy consumption. For example, Valencell-093 describes configuring the optical sensor to maximize optical coupling and minimize relative motion between the device and the user's skin in a wearable device. Ex.1005 (Valencell), [0151]-[0152]. These techniques include using light guiding elements to allow the sensors to be positioned in a manner that focuses on the desired tissue region or blood flow region and reduces detection and impact of environmental noise. Ex.1005 (Valencell), [0153].

263. Based on my knowledge and experience, it is my opinion that a person of ordinary skill in the art would have recognized the benefits described by Valencell-093, and these benefits would have motivated that person to include these same features in Lisogurski's system. The quality of the measurement of a physiological parameter derives ultimately from the quality of the signal being analyzed. Consistent with the general knowledge in the field, Valencell-093 explains that improving the SNR helps improve the quality of the signal being analyzed. *See* Ex.1005 (Valencell), [0151]-[0153].

264. As I explained in § IV.B, above, by 2012, there was a general trend in the industry to create wearable devices, to allow the device to be used in mobile monitoring systems or to allow the device to be used for sports and personal fitness applications. Thus, a person of ordinary skill in the art would have had reason to look to analogous references to create wearable devices that performed better in mobile and consumer applications.

265. Therefore, a person of ordinary skill in the art would have been motivated to consider Lisogurski, Carlson, Tran, Isaacson and Valencell-093 together, and to include features from Valencell-093 in the combined system of Lisogurski, Carlson, Tran, and Isaacson. I describe these features, and more specific reasons for integrating them into Lisogurski, in my analyses below.

266. Lisogurski, Carlson, Tran, and Valencell-093 are analogous systems with common applications and utility; they each describe techniques for improving the power consumption of wearable optical sensing devices while improving their performance and utility. References describing known solutions to related problems are the types of references that a person of ordinary skill would have considered together.

267. The person of ordinary skill in the art would have been motivated to include features from Carlson, Valencell-093, Tran, and Isaacson in Lisogurski's

system. These features, and more specific reasons for combining them, are described in the analyses below.

3. Claims 6, 14, and 23

268. As I explained above (*see* §§VII.A.-B.), the combination of Lisogurski, Carlson, Tran, and Isaacson render obvious independent claims 1, 7, and 15 and dependent claims 2-5 and 8-13. Claims 6 and 14 depend from claims 5 and 13, respectively and specify "*a reflective surface positioned to reflect at least a portion of the lens output light reflected from the tissue.*" Claim 23 depends from claim 15 and likewise specifies "*a reflective surface positioned to reflect at least a portion of light reflected from the tissue*."

269. Claim 23 is different because it recites "*positioned*" instead of "*configured to*" as in claims 6 and 14. A person of ordinary skill would have recognized that this difference in claim terms is inconsequential.

270. Valencell-093 explains that its sensor can be surrounded by a light guiding region to "help[] direct light to and/or from the sensor module [] and a blood flow region within the body part." Ex.1005 (Valencell), [0152]. This region can include a "reflector, such as a metal, metallic alloy…, [or] reflective plastic." Ex.1005 (Valencell), [0152]. A person of ordinary skill would have understood these disclosures to show using of "*reflective surfaces*" to reflect light that has

been reflected back from tissue. Valencell provides some examples of a reflector, shown in the figures below.

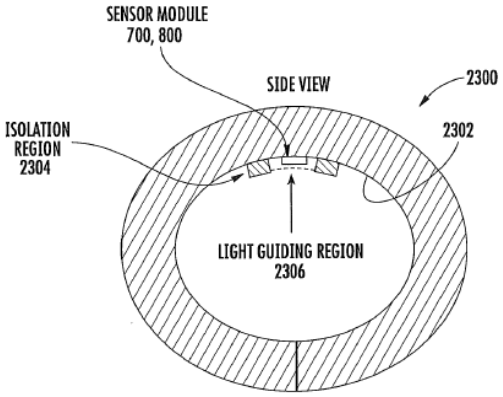

FIG. 24

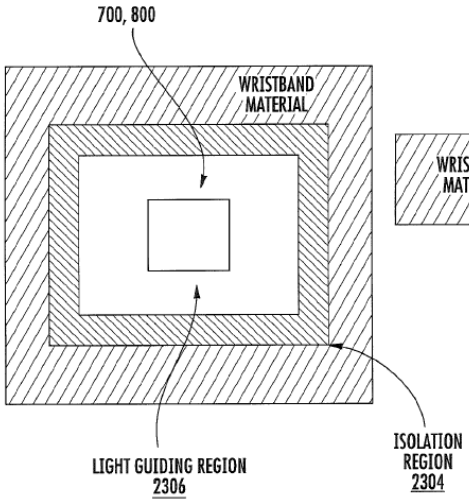

FIG. 26

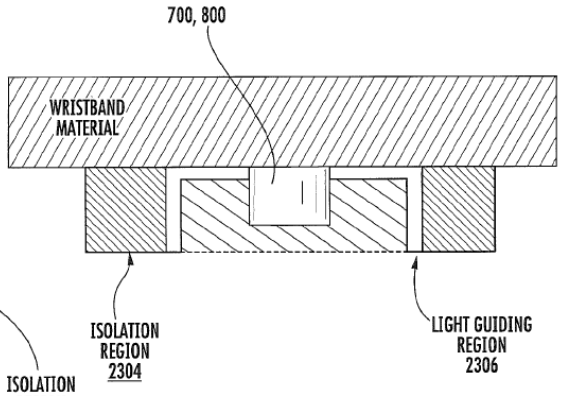

FIG. 27

271. The light guiding region assists in coupling the sensor to the body part (*e.g.*, wrist) and in reducing interference from environmental noise. Ex.1005 (Valencell), [0153]. A person of ordinary skill would have understood this

disclosure to mean that this light guiding region helps increase the signal-to-noise ratio.

272. Based on my knowledge and experience, a person of ordinary skill would have been motivated to implement a reflective surface, as described by Valencell-093, in the combined system of Lisogurski, Carlson, Tran, and Isaacson. Valencell-093 provides a reason for doing so: using a reflective surface helps increase a signal-to-noise ratio. Ex.1005 (Valencell), [0153]. This disclosure alone would have motivated a person of ordinary skill in the art to modify the combined system Lisogurski, Carlson, and Tran to have a reflective surface. This is consistent with Lisogurski's goal to improve a signal to noise ratio. Ex.1011 (Lisogurski), 6:3-6, 9:49-60, 13:60-14:10, 14:40-55, 37:6-20. A person of ordinary skill would have recognized that adding a reflective surface would help achieve Lisogruski's goal to improve signal and signal measurement quality and complement operation of the Lisogurski system. *See* Ex.1011 (Lisogurski), 9:50-52.

273. In addition, a person of ordinary skill would have known that certain material and/or coatings, such as the "such as a metal, metallic alloy…, [or] reflective plastic" as described by Valencell-093 (Ex.1005, [0152]), were well-known to reflect light. These materials and/or coating would be able to integrate them into the Lisogurski systems with routine effort. Such a modification was also

well within the capability of a person of ordinary skill. That person thus would consider the addition of a reflective surface to Lisogurski's sensor to be a predictable arrangement of known elements. Each would have performed the same function it was known to perform (i.e., the reflective surface would reflect additional signals of interest detected by Lisogurski's sensor) and the combination would have yielded what one would expect from the arrangement (i.e., an improved SNR). *See* Ex.1011 (Lisogurski), 9:50-52.

* * *

I, Brian W. Anthony, do hereby declare and state, that all statements made herein of my own knowledge are true and that all statements made on information and belief are believed to be true; and further that these statements were made with the knowledge that willful false statements and the like so made are punishable by fine or imprisonment, under Section 1001 of Title 18 of the United States Code.

Executed on: January 22, 2021

Exhibit List

The list of exhibits that I relied upon in forming my opinions is below.

Exhibit #	Reference Name
1001	U.S. Patent No. 10,517,484
1002	File History of U.S. Patent 10,517,484
1003	RESERVED
1004	RESERVED
1005	U.S. Patent Publication No. 2012/0197093 ("Valencell '093")
1006	RESERVED
1007	U.S. Patent No. 6,505,133 ("Hanna")
1008	U.S. Patent No. 5,746,206 ("Mannheimer")
1009	U.S. Patent Publication No. 2005/0049468 ("Carlson")
1010	U.S. Patent No. 9,596,990 ("Park")
1011	U.S. Patent No. 9,241,676 ("Lisogurski)
1012	RESERVED
1013	RESERVED
1014	RESERVED
1015	U.S. Provisional Application No. 61/747,487
1016	RESERVED
1017	RESERVED
1018	RESERVED
1019	"The Biomedical Engineering Handbook," by Joseph D. Bronzino (1995) ("BE Handbook")

Exhibit #	Reference Name
1020	M. Kranz, et al., The mobile fitness coach: Towards individualized skill assessment using personalized mobile devices, Pervasive and Mobile Computing (June 2012)
1021	Patel, et al., A review of wearable sensors and systems with application rehabilitation, Journal of Neuroengineering & Rehabilitation (2012)
1022	ScienceDirect Report on M. Kranz, et al., The mobile fitness coach: Towards individualized skill assessment using personalized mobile devices, Pervasive and Mobile Computing (2012), available at https://www.sciencedirect.com/science/article/pii/S1574119212000673?via%3Dihub
1023	"The Usage of Tablets in the HealthCare Industry," by Rauf Adil, available at https://www.healthcareitnews.com/blog/usage-tablets-healthcare-industry (Aug. 2, 2012)
1024	A. Omre, Bluetooth Low Enegery: Wireless Connectivity for Medical Monitoring, Journal of Diabetes Science & Technology (Mar. 2010)
1025	RESERVED
1026	RESERVED
1027	P. Baum, et al., Strategic Intelligence Monitor on Personal Health Systems, Phase 2: Market Developments - Remote Patient Monitoring and Treatment, Telecare, Fitness/Wellnes and mHealth, JRC Scientific and Policy Reports of European Commission (2013)
1028	RESERVED
1029	M. Swan, Senior Mania! The Internet of Things, Wearable Computing, Objective Metrics, and the Quantified Self 2.0, Journal of Sensor and Actuator Networks (2012)
1030	RESERVED
1031	U.S. Patent Publication No. 2012/0041767 (“Hoffman”)
1032	U.S. Patent No. 7,278,966 (“Hjelt”)
1033	RESERVED

Exhibit #	Reference Name
1034	RESERVED
1035	E.F. Schubert, Light-Emitting Diodes (Cambridge Univ. Press, 2nd ed. reprinted 2014)
1036	RESERVED
1037	RESERVED
1038	RESERVED
1039	RESERVED
1040	RESERVED
1041	RESERVED
1042	RESERVED
1043	RESERVED
1044	RESERVED
1045	RESERVED
1046	RESERVED
1047	RESERVED
1048	RESERVED
1049	RESERVED
1050	RESERVED
1051	RESERVED
1052	RESERVED
1053	Curriculum Vitae of Brian W. Anthony, PhD
1054	RESERVED
1055	RESERVED

Exhibit #	Reference Name
1056	RESERVED
1057	RESERVED
1058	RESERVED
1059	RESERVED
1060	RESERVED
1061	RESERVED
1062	RESERVED
1063	U.S. Patent No. 8,725,226 to Isaacson
1064	U.S. Patent No. 8,108,036 to Tran