US008821397B2

(12) **United States Patent**
Al-Ali et al.

(10) **Patent No.: US 8,821,397 B2**
(45) **Date of Patent: Sep. 2, 2014**

(54) **DEPTH OF CONSCIOUSNESS MONITOR INCLUDING OXIMETER**

(75) Inventors: **Ammar Al-Ali**, San Juan Capistrano, CA (US); **Yassir Abdul-Hafiz**, Irvine, CA (US)

(73) Assignee: **Masimo Corporation**, Irvine, CA (US)

(*) Notice: Subject to any disclaimer, the term of this patent is extended or adjusted under 35 U.S.C. 154(b) by 139 days.

(21) Appl. No.: **13/246,725**

(22) Filed: **Sep. 27, 2011**

(65) **Prior Publication Data**

US 2012/0083673 A1 Apr. 5, 2012

Related U.S. Application Data

(60) Provisional application No. 61/387,457, filed on Sep. 28, 2010.

(51) **Int. Cl.**

A61B 5/00	(2006.01)
A61B 5/04	(2006.01)
A61B 5/0476	(2006.01)
A61B 5/0478	(2006.01)
A61B 5/048	(2006.01)
A61B 5/1455	(2006.01)

(52) **U.S. Cl.**

CPC ***A61B 5/0476*** (2013.01); ***A61B 5/0478*** (2013.01); ***A61B 5/048*** (2013.01); ***A61B 5/14553*** (2013.01); ***A61B 5/1455*** (2013.01); *A61B 5/6803* (2013.01); *A61B 5/6814* (2013.01)

USPC **600/301**; 600/323; 600/324; 600/340; 600/372; 600/383; 600/544

(58) **Field of Classification Search**

CPC A61B 5/083–5/0836; A61B 5/6814; A61B 5/14551–5/14553; A61B 5/4058–5/4064; A61B 5/6867–5/6868; A61B 5/00434–5/00446; A61B 5/0476–5/0478; A61B 5/4818; A61B 5/4094; A61B 5/6803; A61B 5/02438; A61B 5/00412; A61B 5/1117; A61B 5/0002; A61B 5/0006; A61B 5/16; A61B 5/18; A61B 5/145; G06F 19/3418

USPC 600/300–301, 323, 372–386, 544

See application file for complete search history.

(56) **References Cited**

U.S. PATENT DOCUMENTS

3,638,640	A *	2/1972	Shaw	600/323
4,223,680	A	9/1980	Jobsis	

(Continued)

FOREIGN PATENT DOCUMENTS

EP	505491	9/1992
EP	0 541 393	11/1992

(Continued)

OTHER PUBLICATIONS

Partial International Search Report for International Application No. PCT/US2011/053540, date of mailing: Jan. 30, 2012, in 4 pages.

(Continued)

Primary Examiner — Bill Thomson
Assistant Examiner — Shirley Jian
(74) *Attorney, Agent, or Firm* — Knobbe Martens Olson & Bear LLP

(57) **ABSTRACT**

The present disclosure relates to a sensor for monitoring the depth of consciousness of a patient. The sensor includes a plurality of light sources, light detectors, and in some embodiments, electrodes. In an embodiment, the sensor includes reusable and disposable portions.

18 Claims, 41 Drawing Sheets

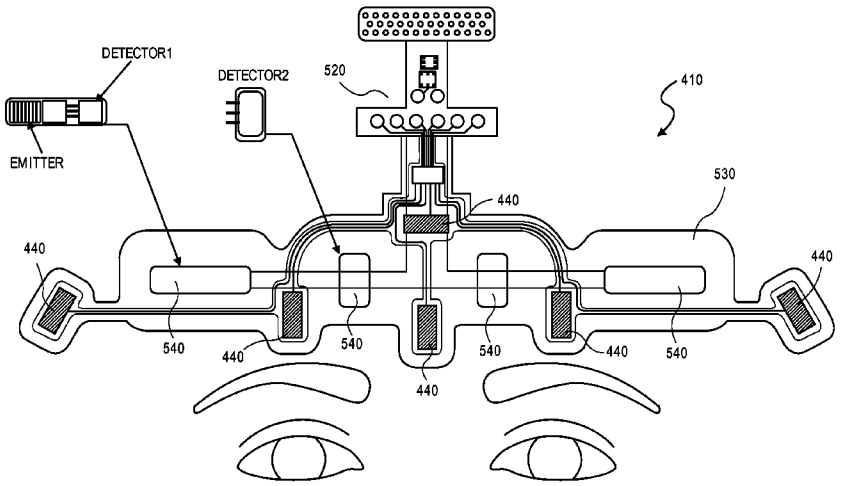

Samsung Ex. 1032
Samsung v. Omni
IPR2025-01251
Page 00001

(56) **References Cited**

U.S. PATENT DOCUMENTS

4,281,645 A 8/1981 Jobsis
4,321,930 A 3/1982 Jobsis et al.
4,380,240 A 4/1983 Jobsis et al.
4,510,938 A 4/1985 Jobsis et al.
4,796,184 A 1/1989 Bahr et al.
4,803,997 A 2/1989 Bowman
4,805,623 A 2/1989 Jobsis
4,901,238 A 2/1990 Suzuki et al.
4,907,876 A 3/1990 Suzuki et al.
4,908,762 A 3/1990 Suzuki et al.
4,917,116 A 4/1990 LaViola et al.
4,928,696 A 5/1990 Henderson et al.
4,938,218 A 7/1990 Goodman et al.
4,957,000 A 9/1990 Delpy et al.
4,960,128 A 10/1990 Gordon et al.
4,964,408 A 10/1990 Hink et al.
4,967,038 A 10/1990 Gevins et al.
4,972,331 A 11/1990 Chance
4,996,992 A 3/1991 LaViola et al.
5,022,403 A 6/1991 LaViola
5,032,024 A 7/1991 Cope
5,038,782 A 8/1991 Gevins et al.
5,041,187 A 8/1991 Hink et al.
5,069,213 A 12/1991 Polczynski
5,090,415 A 2/1992 Yamashita et al.
5,099,842 A 3/1992 Mannheimer et al.
5,101,830 A 4/1992 Duffy et al.
5,103,829 A 4/1992 Suzuki et al.
5,109,849 A 5/1992 Goodman et al.
5,119,815 A * 6/1992 Chance 600/433
5,122,974 A 6/1992 Chance
5,154,180 A 10/1992 Blanchet et al.
5,163,438 A 11/1992 Gordon et al.
5,179,570 A 1/1993 Imran
5,179,957 A 1/1993 Williams
5,181,520 A 1/1993 Wertheim et al.
5,187,672 A 2/1993 Chance et al.
5,195,531 A 3/1993 Bennett
5,211,174 A 5/1993 Imran
5,213,105 A 5/1993 Gratton et al.
5,218,962 A 6/1993 Mannheimer et al.
5,220,502 A 6/1993 Qian et al.
5,226,417 A 7/1993 Swedlow et al.
5,228,440 A 7/1993 Chung et al.
5,247,932 A 9/1993 Chung et al.
5,253,646 A 10/1993 Delpy et al.
5,280,793 A 1/1994 Rosenfeld et al.
5,289,822 A 3/1994 Highe et al.
5,295,482 A 3/1994 Clare et al.
5,299,118 A 3/1994 Martens et al.
5,299,822 A 4/1994 Mayr et al.
5,319,355 A 6/1994 Russek
5,327,888 A 7/1994 Imran
5,331,959 A 7/1994 Imran
5,337,744 A 8/1994 Branigan
5,337,745 A 8/1994 Benaron
5,341,805 A 8/1994 Stavridi et al.
5,345,934 A 9/1994 Highe et al.
5,353,799 A 10/1994 Chance
5,361,773 A 11/1994 Ives
D353,195 S 12/1994 Savage et al.
D353,196 S 12/1994 Savage et al.
5,377,674 A 1/1995 Kuestner
5,377,675 A 1/1995 Ruskewicz et al.
5,377,676 A 1/1995 Vari et al.
5,386,827 A 2/1995 Chance et al.
5,402,778 A 4/1995 Chance
5,406,957 A 4/1995 Tansey
5,413,098 A 5/1995 Benaron
D359,546 S 6/1995 Savage et al.
5,421,329 A 6/1995 Casciani et al.
5,424,843 A 6/1995 Tromberg et al.
5,431,170 A 7/1995 Mathews
D361,840 S 8/1995 Savage et al.
5,441,054 A 8/1995 Tsuchiya
D362,063 S 9/1995 Savage et al.
5,450,855 A 9/1995 Rosenfeld et al.
5,452,717 A 9/1995 Branigan et al.
5,452,718 A 9/1995 Clare et al.
D363,120 S 10/1995 Savage et al.
5,456,252 A 10/1995 Vari et al.
5,458,117 A 10/1995 Chamoun et al.
5,477,051 A 12/1995 Tsuchiya
5,479,934 A 1/1996 Imran
5,482,034 A * 1/1996 Lewis et al. 600/323
5,482,036 A 1/1996 Diab et al.
5,490,505 A 2/1996 Diab et al.
5,492,118 A 2/1996 Gratton et al.
5,494,043 A 2/1996 O'Sullivan et al.
5,497,769 A 3/1996 Gratton et al.
5,511,552 A 4/1996 Johnson
5,517,987 A 5/1996 Tsuchiya
5,520,176 A 5/1996 Cohen
5,520,683 A 5/1996 Subramaniam et al.
5,529,065 A 6/1996 Tsuchiya
5,533,511 A 7/1996 Kaspari et al.
5,534,851 A 7/1996 Russek
5,540,722 A 7/1996 Clare et al.
5,553,614 A 9/1996 Chance
5,561,275 A 10/1996 Savage et al.
5,562,002 A 10/1996 Lalin
5,564,417 A 10/1996 Chance
5,564,418 A 10/1996 Ozaki et al.
5,582,169 A 12/1996 Oda et al.
5,590,649 A 1/1997 Caro et al.
5,596,038 A 1/1997 Subramaniam
5,596,987 A 1/1997 Chance
5,602,924 A 2/1997 Durand et al.
5,605,157 A 2/1997 Panescu et al.
5,626,145 A 5/1997 Clapp et al.
5,632,272 A 5/1997 Diab et al.
5,638,816 A 6/1997 Kiani-Azarbayjany et al.
5,638,818 A 6/1997 Diab et al.
5,640,247 A 6/1997 Tsuchiya et al.
5,645,440 A 7/1997 Tobler et al.
5,664,574 A 9/1997 Chance
5,673,701 A 10/1997 Chance
5,676,142 A 10/1997 Miwa et al.
5,678,558 A 10/1997 Johnson
5,678,560 A 10/1997 Sakamoto et al.
5,685,299 A 11/1997 Diab et al.
5,686,516 A 11/1997 Tzur
5,694,931 A 12/1997 Tsuchiya
5,697,367 A * 12/1997 Lewis et al. 600/310
5,706,821 A 1/1998 Matcher et al.
5,727,547 A 3/1998 Levinson et al.
D393,830 S 4/1998 Tobler et al.
5,743,260 A 4/1998 Chung et al.
5,743,262 A 4/1998 Lepper, Jr. et al.
5,746,210 A 5/1998 Benaron et al.
5,752,519 A 5/1998 Benaron et al.
5,752,914 A 5/1998 Delonzor et al.
5,758,644 A 6/1998 Diab et al.
5,760,910 A 6/1998 Lepper, Jr. et al.
5,769,785 A 6/1998 Diab et al.
5,772,587 A 6/1998 Gratton et al.
5,772,588 A 6/1998 Miwa et al.
5,775,330 A 7/1998 Kangas et al.
5,776,058 A 7/1998 Levinson et al.
5,779,631 A 7/1998 Chance
5,782,237 A 7/1998 Casciani et al.
5,782,756 A 7/1998 Mannheimer
5,782,757 A 7/1998 Diab et al.
5,785,658 A 7/1998 Benaron et al.
5,785,659 A 7/1998 Caro et al.
5,791,347 A 8/1998 Flaherty et al.
5,807,261 A 9/1998 Benaron et al.
5,807,263 A 9/1998 Chance
5,810,734 A 9/1998 Caro et al.
5,813,980 A 9/1998 Levinson et al.
5,813,993 A 9/1998 Kaplan et al.
5,816,247 A 10/1998 Maynard
5,820,558 A 10/1998 Chance
5,823,950 A 10/1998 Diab et al.

(56) **References Cited**

U.S. PATENT DOCUMENTS

5,823,952 A 10/1998 Levinson et al.
5,830,131 A 11/1998 Caro et al.
5,833,618 A 11/1998 Caro et al.
5,846,208 A 12/1998 Pichlmayr et al.
5,851,179 A 12/1998 Ritson et al.
5,853,370 A * 12/1998 Chance et al. 600/473
RE36,044 E 1/1999 Benaron
5,857,979 A 1/1999 Ryu et al.
5,860,919 A 1/1999 Kiani-Azarbayjany et al.
5,865,736 A 2/1999 Baker, Jr. et al.
5,873,821 A 2/1999 Chance et al.
5,879,294 A 3/1999 Anderson et al.
5,890,929 A 4/1999 Mills et al.
5,902,235 A * 5/1999 Lewis et al. 600/323
5,904,654 A 5/1999 Wohltmann et al.
5,917,190 A 6/1999 Yodh et al.
5,919,134 A 7/1999 Diab
5,934,925 A 8/1999 Tobler et al.
5,940,182 A 8/1999 Lepper, Jr. et al.
5,954,053 A 9/1999 Chance et al.
5,983,121 A 11/1999 Tsuchiya
5,987,346 A 11/1999 Benaron et al.
5,987,351 A 11/1999 Chance
5,995,855 A 11/1999 Kiani et al.
5,997,343 A 12/1999 Mills et al.
5,999,846 A 12/1999 Pardey et al.
6,002,952 A 12/1999 Diab et al.
6,011,986 A 1/2000 Diab et al.
6,011,990 A 1/2000 Schultz et al.
6,027,452 A 2/2000 Flaherty et al.
6,032,064 A * 2/2000 Devlin et al. 600/383
6,032,065 A 2/2000 Brown et al.
6,035,223 A 3/2000 Baker, Jr.
6,036,642 A 3/2000 Diab et al.
6,045,509 A 4/2000 Caro et al.
6,052,619 A * 4/2000 John 600/544
6,058,324 A 5/2000 Chance
6,067,462 A 5/2000 Diab et al.
6,067,467 A 5/2000 John
6,069,975 A 5/2000 Lehmann et al.
6,070,098 A 5/2000 Moore-Ede et al.
6,075,610 A 6/2000 Ueda et al.
6,076,010 A 6/2000 Boas et al.
6,078,833 A 6/2000 Hueber
6,081,735 A 6/2000 Diab et al.
6,088,607 A 7/2000 Diab et al.
6,110,522 A 8/2000 Lepper, Jr. et al.
6,124,597 A 9/2000 Shehada
6,128,521 A 10/2000 Marro et al.
6,129,675 A 10/2000 Jay
6,144,868 A 11/2000 Parker
6,151,516 A 11/2000 Kiani-Azarbayjany et al.
6,152,754 A 11/2000 Gerhardt et al.
6,154,669 A 11/2000 Hunter et al.
6,157,850 A 12/2000 Diab et al.
6,157,857 A 12/2000 Dimpfel
6,165,005 A 12/2000 Mills et al.
6,184,521 B1 2/2001 Coffin, IV et al.
6,192,260 B1 2/2001 Chance
6,192,261 B1 2/2001 Gratton et al.
6,206,830 B1 3/2001 Diab et al.
6,216,021 B1 4/2001 Franceschini et al.
6,229,856 B1 5/2001 Diab et al.
6,232,609 B1 5/2001 Snyder et al.
6,233,470 B1 5/2001 Tsuchiya
6,236,871 B1 5/2001 Tsuchiya
6,236,872 B1 5/2001 Diab et al.
6,236,885 B1 5/2001 Hunter et al.
6,240,305 B1 5/2001 Tsuchiya
6,241,683 B1 6/2001 Macklem et al.
6,246,892 B1 6/2001 Chance
6,253,097 B1 6/2001 Aronow et al.
6,256,523 B1 * 7/2001 Diab et al. 600/323
6,263,221 B1 7/2001 Chance et al.
6,263,222 B1 7/2001 Diab et al.
6,272,363 B1 8/2001 Casciani et al.
6,272,367 B1 8/2001 Chance
6,272,378 B1 8/2001 Baumgart-Schmitt
6,278,522 B1 8/2001 Lepper, Jr. et al.
6,280,213 B1 8/2001 Tobler et al.
6,285,896 B1 9/2001 Tobler et al.
6,298,252 B1 10/2001 Kovach et al.
6,301,493 B1 10/2001 Marro et al.
6,317,627 B1 * 11/2001 Ennen et al. 600/544
6,321,100 B1 11/2001 Parker
6,325,761 B1 12/2001 Jay
6,334,065 B1 12/2001 Al-Ali et al.
6,335,792 B1 1/2002 Tsuchiya
6,343,224 B1 1/2002 Parker
6,343,229 B1 1/2002 Siebler et al.
6,349,228 B1 2/2002 Kiani et al.
6,360,114 B1 3/2002 Diab et al.
6,368,283 B1 4/2002 Xu et al.
6,368,287 B1 * 4/2002 Hadas 600/529
6,371,921 B1 4/2002 Caro et al.
6,377,829 B1 4/2002 Al-Ali
6,377,840 B1 4/2002 Gritsenko et al.
6,385,486 B1 * 5/2002 John et al. 600/544
6,388,240 B2 5/2002 Schulz et al.
6,397,091 B2 5/2002 Diab et al.
6,397,099 B1 5/2002 Chance
6,397,845 B1 6/2002 Burton
6,416,480 B1 7/2002 Nenov
6,430,437 B1 8/2002 Marro
6,430,525 B1 8/2002 Weber et al.
6,456,862 B2 9/2002 Benni
6,463,310 B1 10/2002 Swedlow et al.
6,463,311 B1 10/2002 Diab
6,470,199 B1 10/2002 Kopotic et al.
6,473,632 B1 10/2002 Myers
6,481,899 B1 11/2002 Quast et al.
6,487,343 B1 11/2002 Lewandowski et al.
6,496,724 B1 12/2002 Levendowski et al.
6,497,658 B2 12/2002 Roizen et al.
6,501,975 B2 12/2002 Diab et al.
6,505,059 B1 1/2003 Kollias et al.
6,511,424 B1 1/2003 Moore-Ede et al.
6,515,273 B2 2/2003 Al-Ali
6,516,209 B2 2/2003 Cheng et al.
6,516,214 B1 2/2003 Boas
6,519,487 B1 2/2003 Parker
6,525,386 B1 2/2003 Mills et al.
6,526,300 B1 2/2003 Kiani et al.
6,526,309 B1 2/2003 Chance
6,537,228 B1 3/2003 Lambert
6,541,756 B2 4/2003 Schulz et al.
6,542,764 B1 4/2003 Al-Ali et al.
6,542,772 B1 4/2003 Chance
6,549,284 B1 4/2003 Boas et al.
6,564,076 B1 5/2003 Chance
6,567,165 B1 5/2003 Tsuchiya et al.
6,575,902 B1 6/2003 Burton
6,577,884 B1 6/2003 Boas
6,580,086 B1 6/2003 Schulz et al.
6,584,336 B1 6/2003 Ali et al.
6,587,703 B2 7/2003 Cheng et al.
6,591,123 B2 7/2003 Fein et al.
6,594,513 B1 7/2003 Jobsis et al.
6,594,518 B1 7/2003 Benaron et al.
6,595,316 B2 7/2003 Cybulski et al.
6,597,931 B1 7/2003 Cheng et al.
6,597,932 B2 7/2003 Tian et al.
6,597,933 B2 7/2003 Kiani et al.
6,597,944 B1 * 7/2003 Hadas 600/546
6,599,281 B1 7/2003 Struys et al.
6,606,511 B1 8/2003 Ali et al.
6,609,024 B1 8/2003 Ryu et al.
6,615,065 B1 * 9/2003 Barrett et al. 600/340
6,618,614 B1 9/2003 Chance
6,631,291 B2 10/2003 Viertio-Oja et al.
6,632,181 B2 10/2003 Flaherty et al.
6,639,668 B1 10/2003 Trepagnier
6,640,116 B2 10/2003 Diab
6,643,530 B2 11/2003 Diab et al.

(56) **References Cited**

U.S. PATENT DOCUMENTS

6,650,917 B2 11/2003 Diab et al.
6,654,624 B2 11/2003 Diab et al.
6,654,632 B2 11/2003 Lange et al.
6,658,276 B2 12/2003 Kianl et al.
6,661,161 B1 12/2003 Lanzo et al.
6,662,033 B2 12/2003 Casciani et al.
6,665,560 B2 12/2003 Becker et al.
6,667,803 B1 12/2003 Flessland et al.
6,671,530 B2 12/2003 Chung et al.
6,671,531 B2 12/2003 Al-Ali et al.
6,675,031 B1 1/2004 Porges et al.
6,678,543 B2 1/2004 Diab et al.
6,684,090 B2 1/2004 Ali et al.
6,684,091 B2 1/2004 Parker
6,687,524 B1 2/2004 Svejk
6,697,656 B1 2/2004 Al-Ali
6,697,657 B1 2/2004 Shehada et al.
6,697,658 B2 2/2004 Al-Ali
RE38,476 E 3/2004 Diab et al.
6,699,194 B1 3/2004 Diab et al.
6,701,170 B2 3/2004 Stetson
6,708,048 B1 3/2004 Chance
6,708,049 B1 3/2004 Berson et al.
6,711,426 B2 3/2004 Benaron et al.
6,714,804 B2 3/2004 Al-Ali et al.
RE38,492 E 4/2004 Diab et al.
6,721,582 B2 4/2004 Trepagnier et al.
6,721,585 B1 4/2004 Parker
6,725,075 B2 4/2004 Al-Ali
6,728,560 B2 4/2004 Kollias et al.
6,728,564 B2 4/2004 Lahteenmaki
6,731,975 B1 5/2004 Viertio-Oja
6,735,458 B2 5/2004 Cheng et al.
6,735,459 B2 5/2004 Parker
6,745,060 B2 6/2004 Diab et al.
6,748,259 B1 6/2004 Benaron et al.
6,748,263 B2 6/2004 Griffiths et al.
6,751,499 B2 6/2004 Lange et al.
6,757,558 B2 6/2004 Lange et al.
6,760,607 B2 7/2004 Al-Ali
6,768,920 B2 7/2004 Lange et al.
6,770,028 B1 8/2004 Ali et al.
6,771,994 B2 8/2004 Kiani et al.
6,792,300 B1 9/2004 Diab et al.
6,795,724 B2 9/2004 Hogan
6,801,648 B2 10/2004 Cheng
6,801,797 B2 10/2004 Mannheimer et al.
6,801,803 B2 10/2004 Viertio-Oja
6,813,511 B2 11/2004 Diab et al.
6,816,741 B2 11/2004 Diab
6,822,564 B2 11/2004 Al-Ali
6,826,419 B2 11/2004 Diab et al.
6,830,047 B2 12/2004 Heitmeier et al.
6,830,711 B2 12/2004 Mills et al.
6,836,502 B2 12/2004 Canady et al.
6,839,583 B1 1/2005 Lewandowski et al.
6,850,787 B2 2/2005 Weber et al.
6,850,788 B2 2/2005 Al-Ali
6,852,083 B2 2/2005 Caro et al.
6,861,639 B2 3/2005 Al-Ali
6,892,006 B2 5/2005 Lewandowski et al.
6,898,452 B2 5/2005 Al-Ali et al.
6,907,280 B2 6/2005 Becerra et al.
6,920,345 B2 7/2005 Al-Ali et al.
6,931,268 B1 8/2005 Kiani-Azarbayjany et al.
6,934,570 B2 * 8/2005 Kiani et al. 600/324
6,934,579 B2 8/2005 Mantzxaridis et al.
6,939,305 B2 9/2005 Flaherty et al.
6,943,348 B1 9/2005 Coffin, IV
6,950,687 B2 9/2005 Al-Ali
6,950,698 B2 9/2005 Sarkela et al.
6,956,650 B2 10/2005 Boas et al.
6,958,815 B2 10/2005 Bevilacqua et al.
6,961,598 B2 11/2005 Diab
6,970,792 B1 11/2005 Diab
6,975,901 B2 12/2005 Philip
6,979,812 B2 12/2005 Al-Ali
6,985,763 B2 1/2006 Boas et al.
6,985,764 B2 1/2006 Mason et al.
6,993,371 B2 1/2006 Kiani et al.
6,993,380 B1 1/2006 Modarres
6,996,427 B2 2/2006 Ali et al.
6,999,904 B2 2/2006 Weber et al.
7,003,338 B2 2/2006 Weber et al.
7,003,339 B2 2/2006 Diab et al.
7,010,341 B2 3/2006 Chance
7,015,451 B2 3/2006 Dalke et al.
7,024,233 B2 4/2006 Ali et al.
7,027,849 B2 4/2006 Al-Ali
7,030,749 B2 4/2006 Al-Ali
7,035,744 B2 4/2006 Cheriet et al.
7,039,449 B2 5/2006 Al-Ali
7,041,060 B2 5/2006 Flaherty et al.
7,044,918 B2 5/2006 Diab
7,047,054 B2 5/2006 Benni
7,047,055 B2 5/2006 Boas et al.
7,047,056 B2 5/2006 Hannula et al.
7,054,680 B1 5/2006 Genger et al.
7,067,893 B2 6/2006 Mills et al.
7,072,701 B2 * 7/2006 Chen et al. 600/331
7,085,597 B2 8/2006 Fein et al.
7,092,748 B2 8/2006 Valdes et al.
7,096,052 B2 8/2006 Mason et al.
7,096,054 B2 8/2006 Abdul-Hafiz et al.
7,132,641 B2 11/2006 Schulz et al.
7,139,603 B2 11/2006 Chance
7,142,901 B2 11/2006 Kiani et al.
7,149,561 B2 12/2006 Diab
7,186,966 B2 3/2007 Al-Ali
7,190,261 B2 3/2007 Al-Ali
7,209,861 B2 4/2007 Hively
7,215,984 B2 5/2007 Diab
7,215,986 B2 5/2007 Diab
7,220,240 B2 5/2007 Struys et al.
7,221,971 B2 5/2007 Diab
7,221,975 B2 5/2007 Lindstrom
7,225,006 B2 5/2007 Al-Ali et al.
7,225,007 B2 5/2007 Al-Ali
7,225,013 B2 5/2007 Geva et al.
RE39,672 E 6/2007 Shehada et al.
7,228,169 B2 6/2007 Viertio-Oja
7,229,430 B2 6/2007 Hickle et al.
7,231,246 B2 6/2007 Rautee et al.
7,239,385 B2 7/2007 Schmitz et al.
7,239,901 B2 7/2007 Gritsenko
7,239,905 B2 7/2007 Kiani-Azarbayjany et al.
7,239,988 B2 7/2007 Hasson et al.
7,245,953 B1 7/2007 Parker
7,248,909 B2 7/2007 Lee et al.
7,254,429 B2 8/2007 Schurman et al.
7,254,431 B2 8/2007 Al-Ali
7,254,433 B2 8/2007 Diab et al.
7,254,434 B2 8/2007 Schulz et al.
7,254,500 B2 8/2007 Makeig et al.
7,272,425 B2 9/2007 Al-Ali
7,274,955 B2 9/2007 Kiani et al.
D554,263 S 10/2007 Al-Ali
7,277,741 B2 10/2007 Debreczeny et al.
7,277,831 B1 10/2007 Pawelzik et al.
7,280,858 B2 10/2007 Al-Ali et al.
7,288,066 B2 10/2007 Drew
7,289,835 B2 10/2007 Mansfield et al.
7,289,837 B2 10/2007 Mannheimer et al.
7,292,883 B2 11/2007 De Felice et al.
7,295,866 B2 11/2007 Al-Ali
7,313,427 B2 12/2007 Benni
7,328,053 B1 2/2008 Diab et al.
7,332,784 B2 2/2008 Mills et al.
7,333,647 B2 2/2008 Boas et al.
7,340,287 B2 3/2008 Mason et al.
7,341,559 B2 3/2008 Schulz et al.
7,343,186 B2 3/2008 Lamego et al.
7,343,187 B2 3/2008 Stetson
7,349,726 B2 3/2008 Casciani et al.

(56) **References Cited**

U.S. PATENT DOCUMENTS

D566,282	S	4/2008	Al-Ali et al.
7,355,512	B1	4/2008	Al-Ali
7,355,688	B2	4/2008	Lash et al.
7,356,365	B2	4/2008	Schurman
D568,479	S	5/2008	Mao et al.
7,371,981	B2	5/2008	Abdul-Hafiz
7,373,193	B2	5/2008	Al-Ali et al.
7,373,194	B2	5/2008	Weber et al.
7,373,198	B2	5/2008	Bibian et al.
7,376,453	B1	5/2008	Diab et al.
7,376,454	B2	5/2008	Casciani et al.
7,377,794	B2	5/2008	Al-Ali et al.
7,377,899	B2	5/2008	Weber et al.
7,383,070	B2	6/2008	Diab et al.
7,392,074	B2	6/2008	Isaacson et al.
7,415,297	B2	8/2008	Al-Ali et al.
7,415,298	B2	8/2008	Casciani et al.
7,427,165	B2	9/2008	Benaron et al.
7,428,432	B2	9/2008	Ali et al.
7,428,434	B2	9/2008	Tromberg et al.
7,438,683	B2	10/2008	Al-Ali et al.
7,440,787	B2	10/2008	Diab
7,454,240	B2	11/2008	Diab et al.
7,457,652	B2	11/2008	Porges et al.
7,467,002	B2	12/2008	Weber et al.
7,469,157	B2	12/2008	Diab et al.
7,471,969	B2	12/2008	Diab et al.
7,471,971	B2	12/2008	Diab et al.
7,474,245	B1	1/2009	Wang et al.
7,478,108	B2	1/2009	Townsend et al.
7,483,729	B2	1/2009	Al-Ali et al.
7,483,730	B2	1/2009	Diab et al.
7,483,731	B2	1/2009	Hoarau et al.
7,486,977	B2 *	2/2009	Sweitzer et al. 600/323
7,489,958	B2	2/2009	Diab et al.
7,496,391	B2	2/2009	Diab et al.
7,496,393	B2	2/2009	Diab et al.
7,496,400	B2	2/2009	Hoskonen et al.
D587,657	S	3/2009	Al-Ali et al.
7,499,740	B2	3/2009	Nordstrom et al.
7,499,741	B2	3/2009	Diab et al.
7,499,835	B2	3/2009	Weber et al.
7,500,950	B2	3/2009	Al-Ali et al.
7,509,154	B2	3/2009	Diab et al.
7,509,494	B2	3/2009	Al-Ali
7,510,849	B2	3/2009	Schurman et al.
7,515,948	B1	4/2009	Balberg et al.
7,522,949	B2	4/2009	Berson et al.
7,526,328	B2	4/2009	Diab et al.
7,530,942	B1	5/2009	Diab
7,530,949	B2	5/2009	Al Ali et al.
7,530,955	B2	5/2009	Diab et al.
7,563,110	B2	7/2009	Al-Ali et al.
7,596,398	B2	9/2009	Al-Ali et al.
7,610,082	B2	10/2009	Chance
7,618,375	B2	11/2009	Flaherty
D606,659	S	12/2009	Kiani et al.
7,647,083	B2	1/2010	Al-Ali et al.
D609,193	S	2/2010	Al-Ali et al.
D614,305	S	4/2010	Al-Ali et al.
RE41,317	E	5/2010	Parker
7,729,733	B2	6/2010	Al-Ali et al.
7,734,320	B2	6/2010	Al-Ali
7,761,127	B2	7/2010	Al-Ali et al.
7,761,128	B2	7/2010	Al-Ali et al.
7,764,982	B2	7/2010	Dalke et al.
D621,516	S	8/2010	Kiani et al.
7,791,155	B2	9/2010	Diab
7,801,581	B2	9/2010	Diab
7,822,452	B2	10/2010	Schurman et al.
RE41,912	E	11/2010	Parker
7,844,313	B2	11/2010	Kiani et al.
7,844,314	B2	11/2010	Al-Ali
7,844,315	B2	11/2010	Al-Ali
7,865,222	B2	1/2011	Weber et al.
7,873,497	B2	1/2011	Weber et al.
7,880,606	B2	2/2011	Al-Ali
7,880,626	B2	2/2011	Al-Ali et al.
7,891,355	B2	2/2011	Al-Ali et al.
7,894,868	B2	2/2011	Al-Ali et al.
7,899,507	B2	3/2011	Al-Ali et al.
7,899,518	B2	3/2011	Trepagnier et al.
7,904,132	B2	3/2011	Weber et al.
7,909,772	B2	3/2011	Popov et al.
7,910,875	B2	3/2011	Al-Ali
7,919,713	B2	4/2011	Al-Ali et al.
7,937,128	B2	5/2011	Al-Ali
7,937,129	B2	5/2011	Mason et al.
7,937,130	B2	5/2011	Diab et al.
7,941,199	B2	5/2011	Kiani
7,951,086	B2	5/2011	Flaherty et al.
7,957,780	B2	6/2011	Lamego et al.
7,962,188	B2	6/2011	Kiani et al.
7,962,190	B1	6/2011	Diab et al.
7,976,472	B2	7/2011	Kiani
7,988,637	B2	8/2011	Diab
7,990,382	B2	8/2011	Kiani
7,991,446	B2	8/2011	Ali et al.
8,000,761	B2	8/2011	Al-Ali
8,008,088	B2	8/2011	Bellott et al.
RE42,753	E	9/2011	Kiani-Azarbayjany et al.
8,019,400	B2	9/2011	Diab et al.
8,028,701	B2	10/2011	Al-Ali et al.
8,029,765	B2	10/2011	Bellott et al.
8,036,728	B2	10/2011	Diab et al.
8,046,040	B2	10/2011	Ali et al.
8,046,041	B2	10/2011	Diab et al.
8,046,042	B2	10/2011	Diab et al.
8,048,040	B2	11/2011	Kiani
8,050,728	B2	11/2011	Al-Ali et al.
8,103,328	B2 *	1/2012	Turner et al. 600/383
RE43,169	E	2/2012	Parker
8,118,620	B2	2/2012	Al-Ali et al.
8,126,528	B2	2/2012	Diab et al.
8,128,572	B2	3/2012	Diab et al.
8,130,105	B2	3/2012	Al-Ali et al.
8,145,287	B2	3/2012	Diab et al.
8,150,487	B2	4/2012	Diab et al.
8,175,672	B2	5/2012	Parker
8,180,420	B2	5/2012	Diab et al.
8,182,443	B1	5/2012	Kiani
8,185,180	B2	5/2012	Diab et al.
8,190,223	B2	5/2012	Al-Ali et al.
8,190,227	B2	5/2012	Diab et al.
8,203,438	B2	6/2012	Kiani et al.
8,203,704	B2	6/2012	Merritt et al.
8,224,411	B2	7/2012	Al-Ali et al.
8,228,181	B2	7/2012	Al-Ali
8,229,533	B2	7/2012	Diab et al.
8,233,955	B2	7/2012	Al-Ali et al.
8,244,325	B2	8/2012	Al-Ali et al.
8,255,026	B1	8/2012	Al-Ali
8,255,027	B2	8/2012	Al-Ali et al.
8,255,028	B2	8/2012	Al-Ali et al.
8,260,577	B2	9/2012	Weber et al.
8,265,723	B1	9/2012	McHale et al.
8,274,360	B2	9/2012	Sampath et al.
8,301,217	B2	10/2012	Al-Ali et al.
8,310,336	B2	11/2012	Muhsin et al.
8,315,683	B2	11/2012	Al-Ali et al.
RE43,860	E	12/2012	Parker
8,337,403	B2	12/2012	Al-Ali et al.
8,346,330	B2	1/2013	Lamego
8,353,842	B2	1/2013	Al-Ali et al.
8,355,766	B2	1/2013	MacNeish, III et al.
8,359,080	B2	1/2013	Diab et al.
8,364,223	B2	1/2013	Al-Ali et al.
8,364,226	B2	1/2013	Diab et al.
8,374,665	B2	2/2013	Lamego
8,385,995	B2	2/2013	Al-Ali et al.
8,385,996	B2	2/2013	Smith et al.
8,388,353	B2	3/2013	Kiani et al.
8,396,526	B2 *	3/2013	Benni 600/323
8,399,822	B2	3/2013	Al-Ali

(56) **References Cited**

U.S. PATENT DOCUMENTS

8,401,602	B2	3/2013	Kiani	
8,405,608	B2	3/2013	Al-Ali et al.	
8,414,499	B2	4/2013	Al-Ali et al.	
8,418,524	B2	4/2013	Al-Ali	
8,423,106	B2	4/2013	Lamego et al.	
8,428,674	B2 *	4/2013	Duffy et al.	600/323
8,428,967	B2	4/2013	Olsen et al.	
8,430,817	B1	4/2013	Al-Ali et al.	
8,437,825	B2	5/2013	Dalvi et al.	
8,452,364	B2 *	5/2013	Hannula et al.	600/322
8,455,290	B2	6/2013	Siskavich	
8,457,703	B2	6/2013	Al-Ali	
8,457,707	B2	6/2013	Kiani	
8,463,349	B2	6/2013	Diab et al.	
8,466,286	B2	6/2013	Bellott et al.	
8,471,713	B2	6/2013	Poeze et al.	
8,473,020	B2	6/2013	Kiani et al.	
8,483,787	B2	7/2013	Al-Ali et al.	
8,489,364	B2	7/2013	Weber et al.	
8,498,684	B2	7/2013	Weber et al.	
8,509,867	B2	8/2013	Workman et al.	
8,515,509	B2	8/2013	Bruinsma et al.	
8,523,781	B2	9/2013	Al-Ali	
8,529,301	B2	9/2013	Al-Ali et al.	
8,532,727	B2	9/2013	Ali et al.	
8,532,728	B2	9/2013	Diab et al.	
8,547,209	B2	10/2013	Kiani et al.	
8,548,548	B2	10/2013	Al-Ali	
8,548,550	B2	10/2013	Al-Ali et al.	
2002/0019588	A1	2/2002	Marro et al.	
2002/0029005	A1	3/2002	Levendowski et al.	
2002/0082513	A1	6/2002	Ennen et al.	
2002/0085174	A1	7/2002	Bolger et al.	
2002/0091335	A1 *	7/2002	John et al.	600/544
2002/0123693	A1	9/2002	Lange et al.	
2002/0183634	A1	12/2002	Rantala et al.	
2002/0188216	A1	12/2002	Kayyali et al.	
2003/0069516	A1	4/2003	Becker et al.	
2003/0145854	A1	8/2003	Hickle	
2003/0158587	A1	8/2003	Esteller et al.	
2003/0204148	A1	10/2003	Lange et al.	
2003/0225323	A1 *	12/2003	Kiani et al.	600/323
2004/0030258	A1 *	2/2004	Williams et al.	600/544
2004/0073098	A1	4/2004	Geva et al.	
2004/0073129	A1	4/2004	Caldwell et al.	
2004/0082876	A1	4/2004	Viertio-Oja et al.	
2004/0167418	A1	8/2004	Nguyen et al.	
2004/0193068	A1	9/2004	Burton et al.	
2004/0243017	A1	12/2004	Causevic	
2004/0267153	A1	12/2004	Bergethon	
2005/0010116	A1	1/2005	Korhonen et al.	
2005/0059899	A1	3/2005	Merilainen et al.	
2005/0081847	A1	4/2005	Lee et al.	
2005/0090754	A1	4/2005	Wolff et al.	
2005/0113704	A1	5/2005	Lawson et al.	
2005/0119547	A1	6/2005	Shastri et al.	
2005/0217674	A1	10/2005	Burton et al.	
2005/0277819	A1 *	12/2005	Kiani et al.	600/324
2006/0084852	A1 *	4/2006	Mason et al.	600/344
2006/0100538	A1	5/2006	Genger et al.	
2006/0116556	A1	6/2006	Duhamel	
2006/0167368	A1	7/2006	Sarkela	
2006/0189861	A1	8/2006	Chen et al.	
2006/0217628	A1	9/2006	Huiku	
2006/0235315	A1	10/2006	Akselrod	
2006/0241356	A1	10/2006	Flaherty	
2006/0241562	A1	10/2006	John et al.	
2006/0293608	A1	12/2006	Rothman et al.	
2007/0010755	A1	1/2007	Sarkela et al.	
2007/0010756	A1	1/2007	Viertio-Oja	
2007/0010795	A1	1/2007	Sarkela et al.	
2007/0185407	A1	8/2007	Xu et al.	
2007/0208269	A1 *	9/2007	Mumford et al.	600/546
2007/0244721	A1	10/2007	Sackner-Bernstein et al.	
2007/0249952	A1	10/2007	Rubin et al.	
2008/0017800	A1	1/2008	Benni	
2008/0221461	A1 *	9/2008	Zhou et al.	600/485
2008/0234597	A1	9/2008	Becker et al.	
2008/0255469	A1	10/2008	Shieh et al.	
2008/0285029	A1	11/2008	Benni et al.	
2008/0294063	A1	11/2008	Bibian et al.	
2008/0300469	A1	12/2008	Kuo et al.	
2008/0300473	A1	12/2008	Benni	
2008/0300474	A1	12/2008	Benni et al.	
2009/0018427	A1	1/2009	Causevic et al.	
2009/0018429	A1	1/2009	Saliga et al.	
2009/0036799	A1	2/2009	Sandhu et al.	
2009/0088619	A1 *	4/2009	Turner et al.	600/383
2009/0108205	A1	4/2009	Duffy et al.	
2009/0182209	A1	7/2009	Benni	
2009/0281403	A1	11/2009	Benni	
2010/0049018	A1 *	2/2010	Duffy et al.	600/323
2010/0063438	A1 *	3/2010	Bengtsson	604/66
2010/0130840	A1 *	5/2010	Isaacson	600/323
2012/0088984	A1 *	4/2012	Al-Ali et al.	600/301

FOREIGN PATENT DOCUMENTS

EP	638193	2/1995
EP	1250886	10/2002
EP	1624798	11/2004
EP	1779257	5/2007
WO	WO 91/09372	6/1991
WO	WO 91/19453	12/1991
WO	WO 92/02176	2/1992
WO	WO 93/21615	10/1993
WO	WO 99/08589	2/1999
WO	WO 00/21432	4/2000
WO	WO 00/21435	4/2000
WO	WO 00/56211	9/2000
WO	WO 00/56212	9/2000
WO	WO 01/30414	5/2001
WO	WO 2004/028362	4/2004
WO	WO 2004/054441	7/2004
WO	WO 2007/059248	5/2007
WO	WO 2007/140535	12/2007
WO	WO 2007/140536	12/2007
WO	WO 2007/149553	12/2007
WO	WO 2008/015449	2/2008
WO	WO 2008/040846	4/2008
WO	WO 2008/043365	4/2008
WO	WO 2008/109694	9/2008
WO	WO 2008/109699	9/2008
WO	WO 2008/119029	10/2008
WO	WO 2008/119031	10/2008
WO	WO 2008/122082	10/2008
WO	WO 2008/138340	11/2008

OTHER PUBLICATIONS

International Search Report for International Application No. PCT/US2011/053540, date of mailing: May 3, 2012, in 14 pages.

International Preliminary Report on Patentability for International Application No. PCT/US2011/053540, date of mailing: Apr. 2, 2013, in 9 pages.

* cited by examiner

FIG. 1A

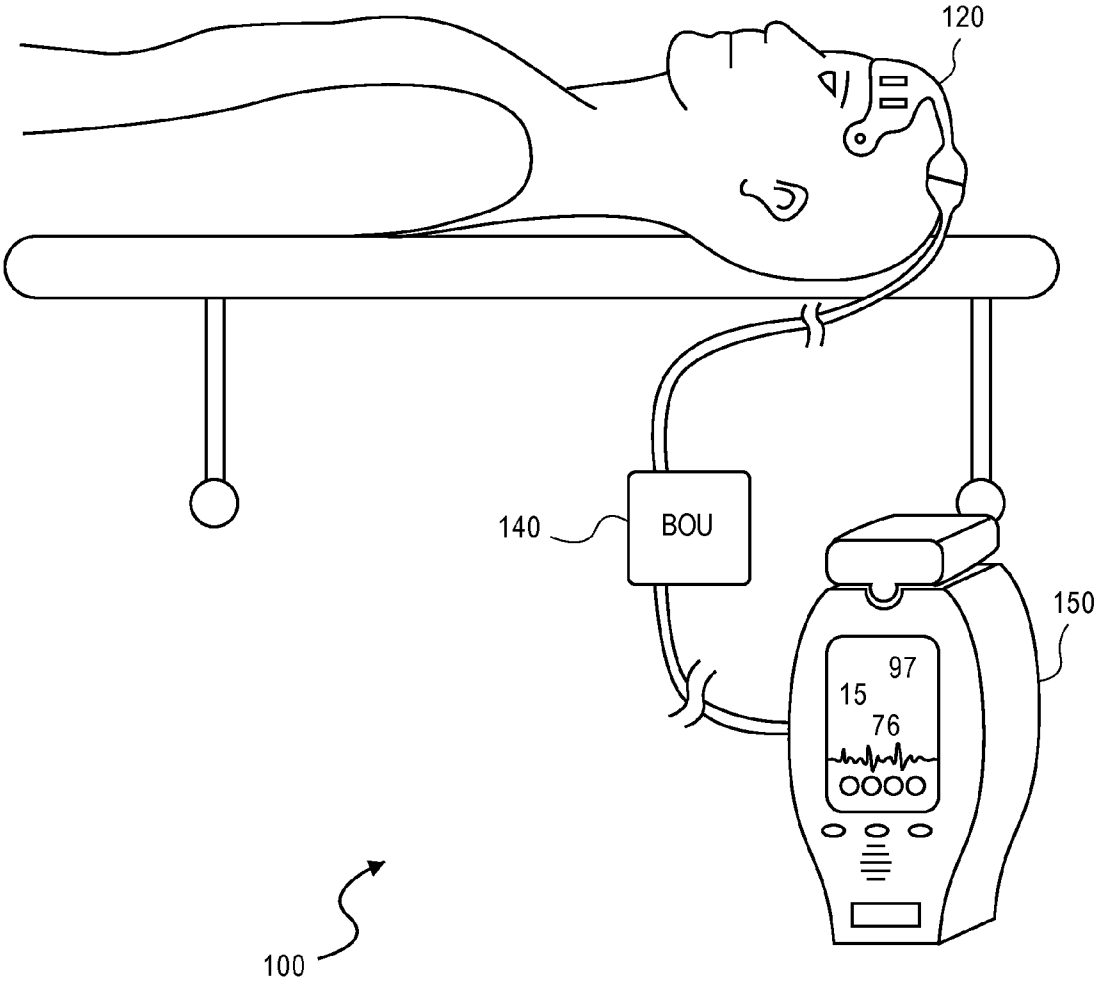

FIG. 1B

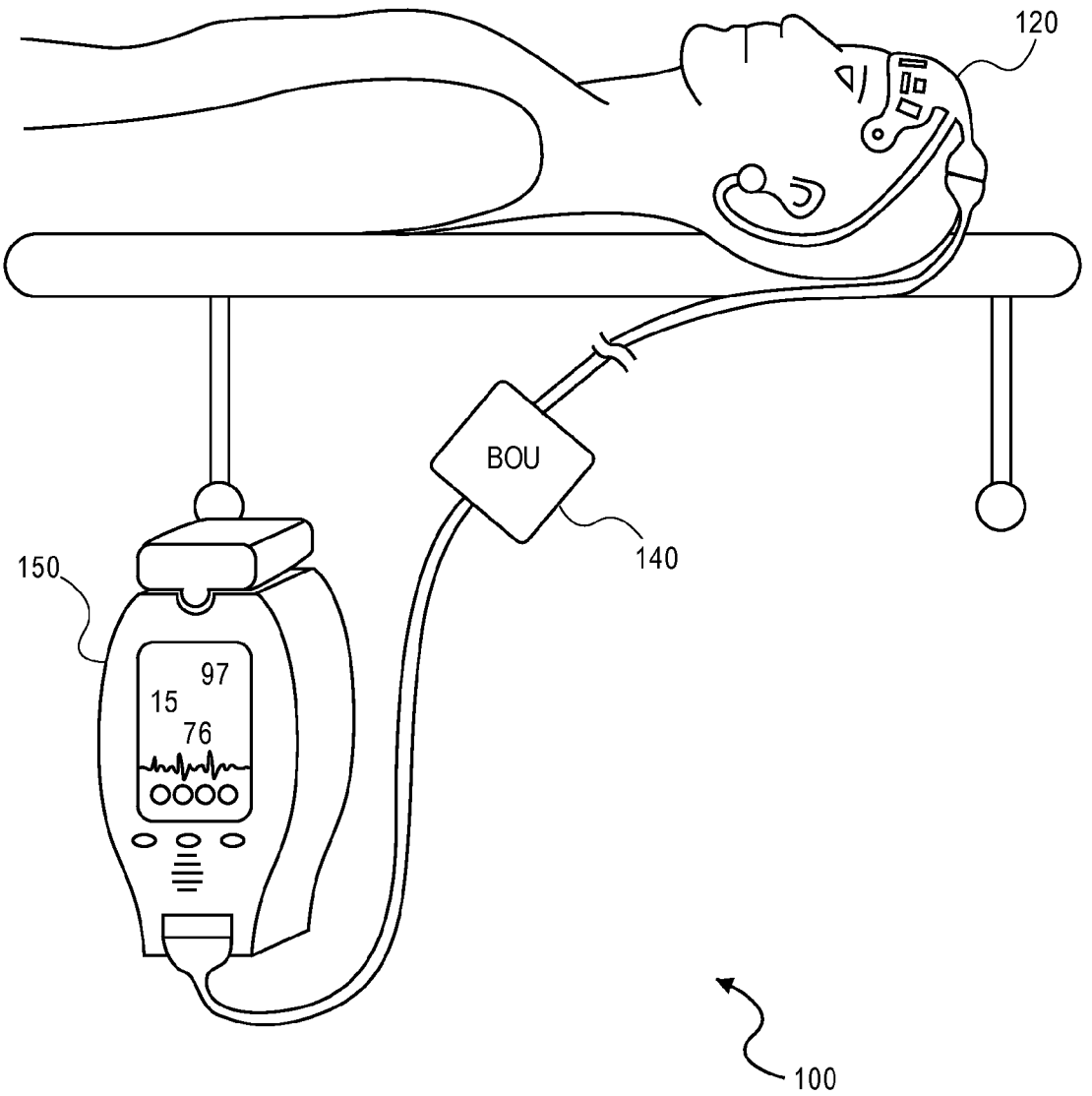

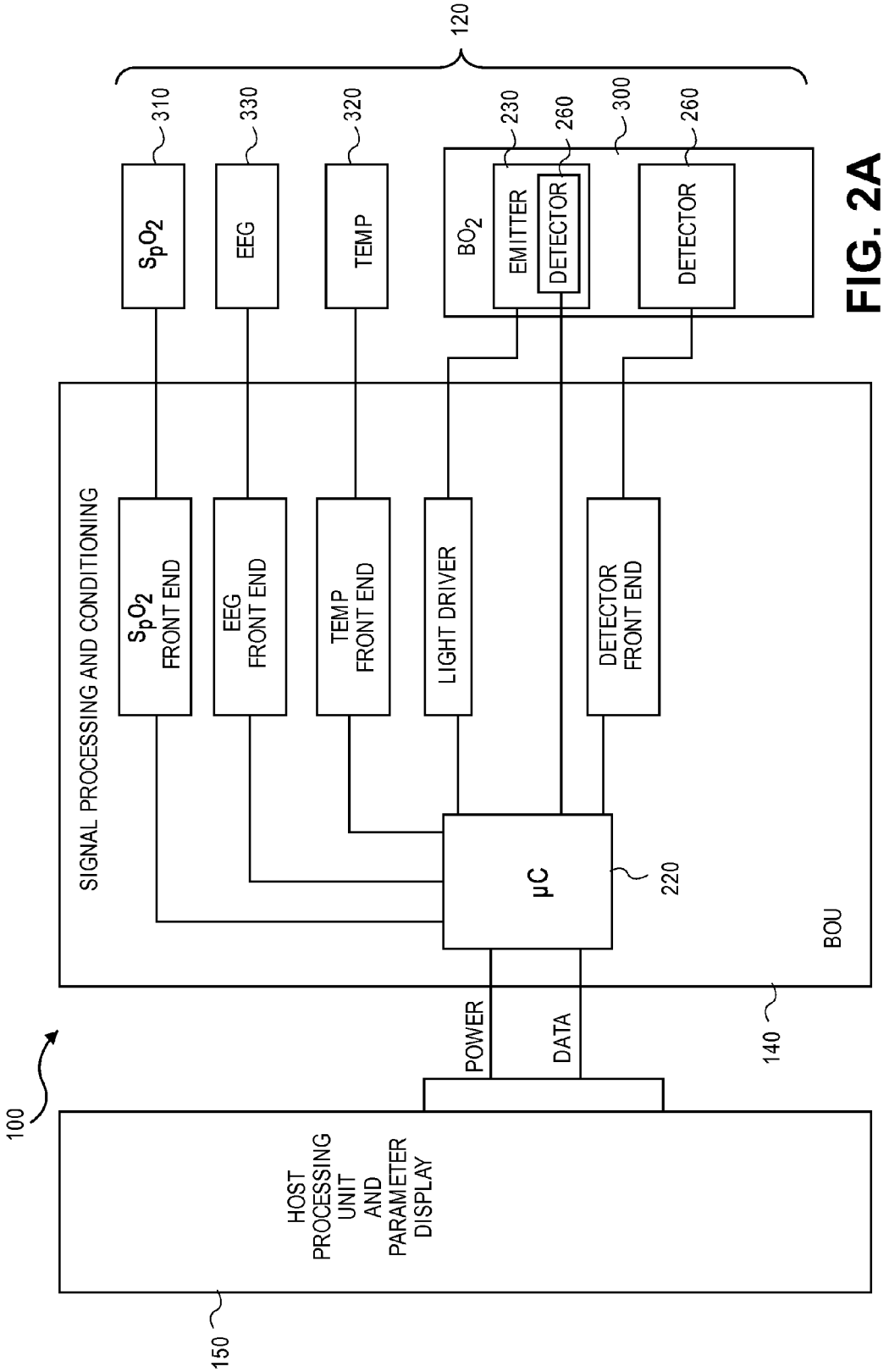
120
310
330
320
230
260
300
260
S_pO_2
EEG
TEMP
BO_2
EMITTER
DETECTOR
DETECTOR
SIGNAL PROCESSING AND CONDITIONING
S_pO_2 FRONT END
EEG FRONT END
TEMP FRONT END
LIGHT DRIVER
DETECTOR FRONT END
µC
220
BOU
140
POWER
DATA
100
HOST PROCESSING UNIT AND PARAMETER DISPLAY
150

FIG. 2A

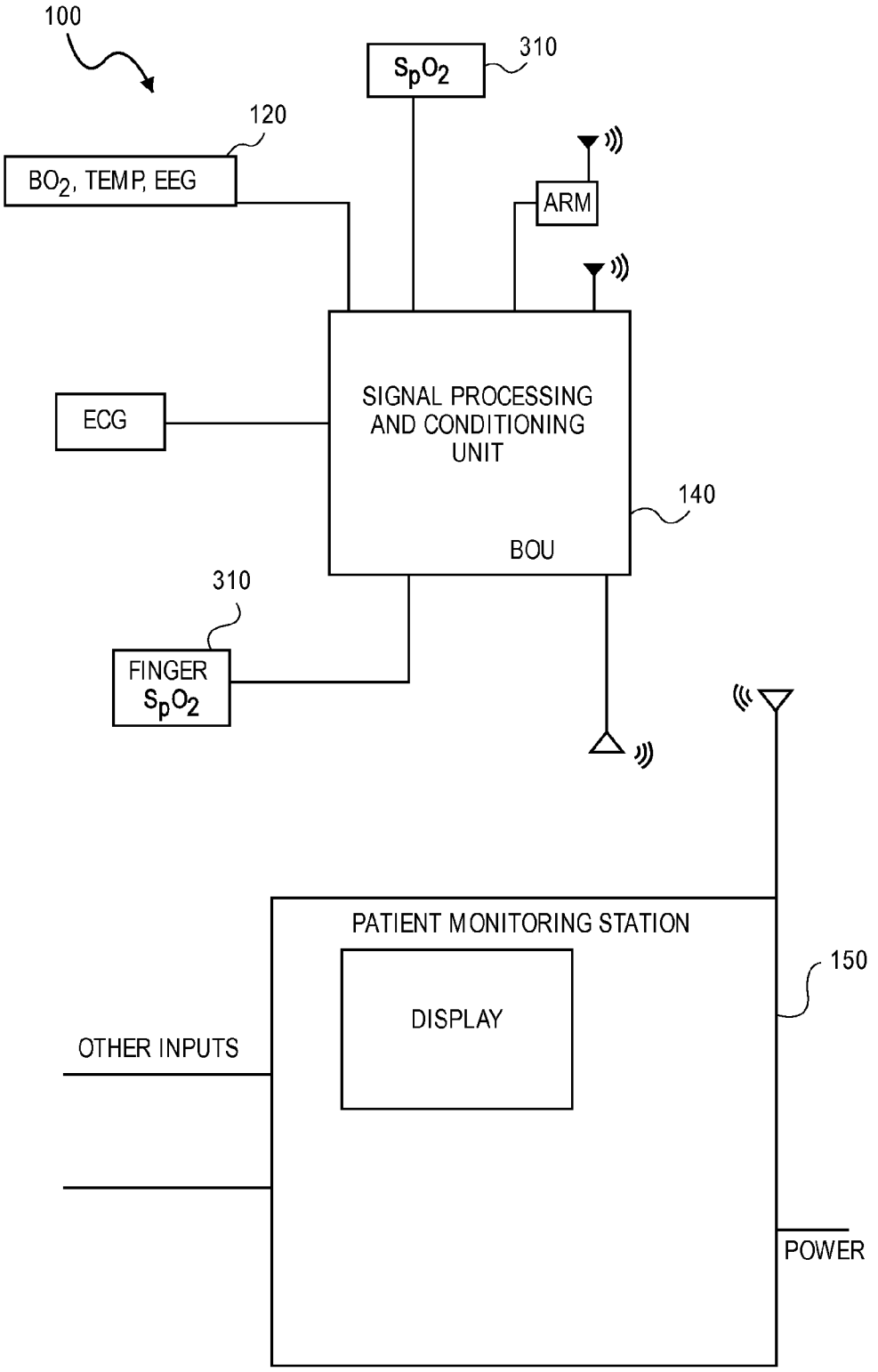
100
S_pO_2
310
120
BO_2, TEMP, EEG
ARM
SIGNAL PROCESSING AND CONDITIONING UNIT
ECG
140
BOU
310
FINGER S_pO_2
PATIENT MONITORING STATION
DISPLAY
150
OTHER INPUTS
POWER

FIG. 2B

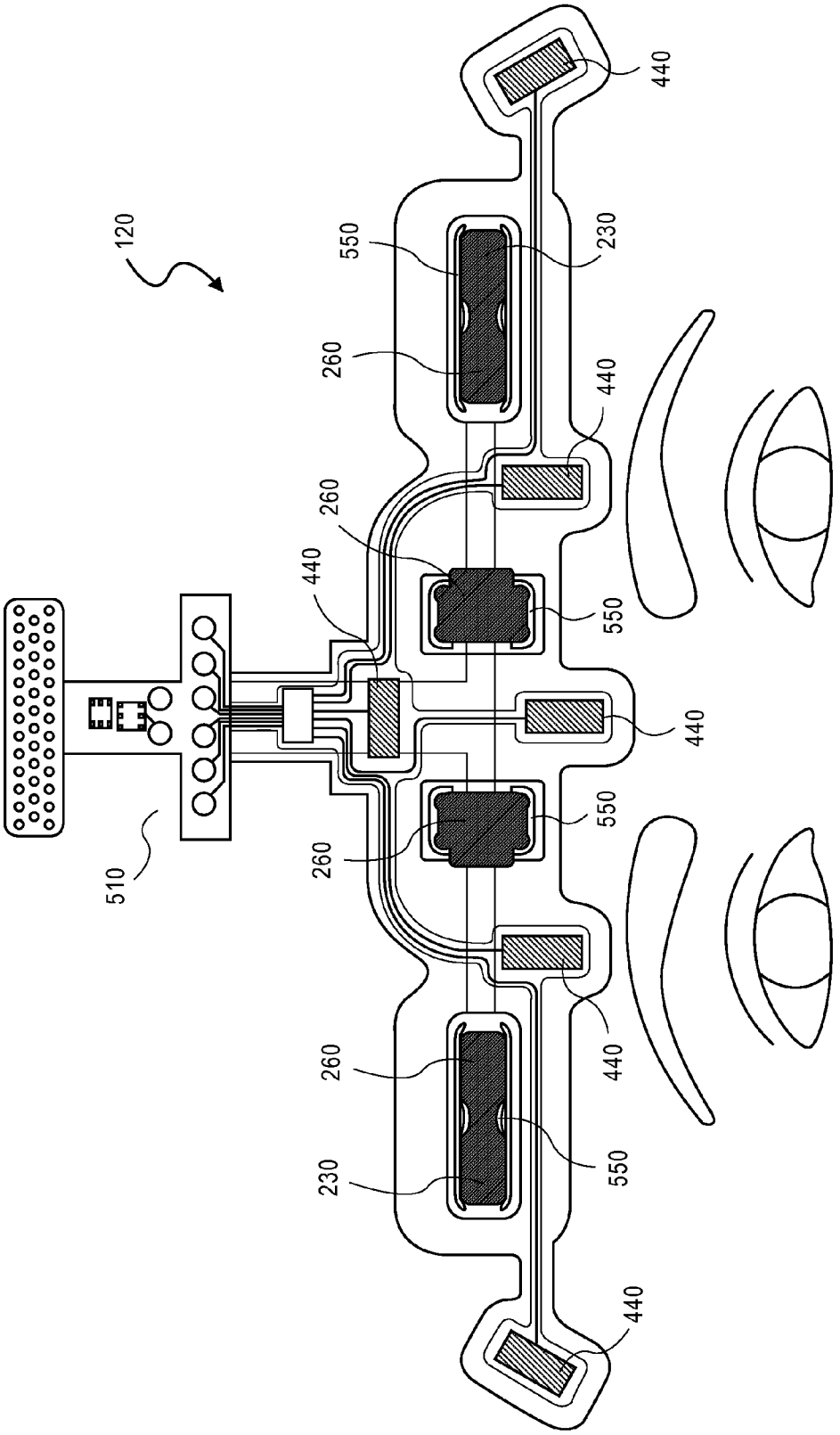
120
510
440
550
230
260
440
260
440
550
440
550
260
440
260
550
230
440

FIG. 3A

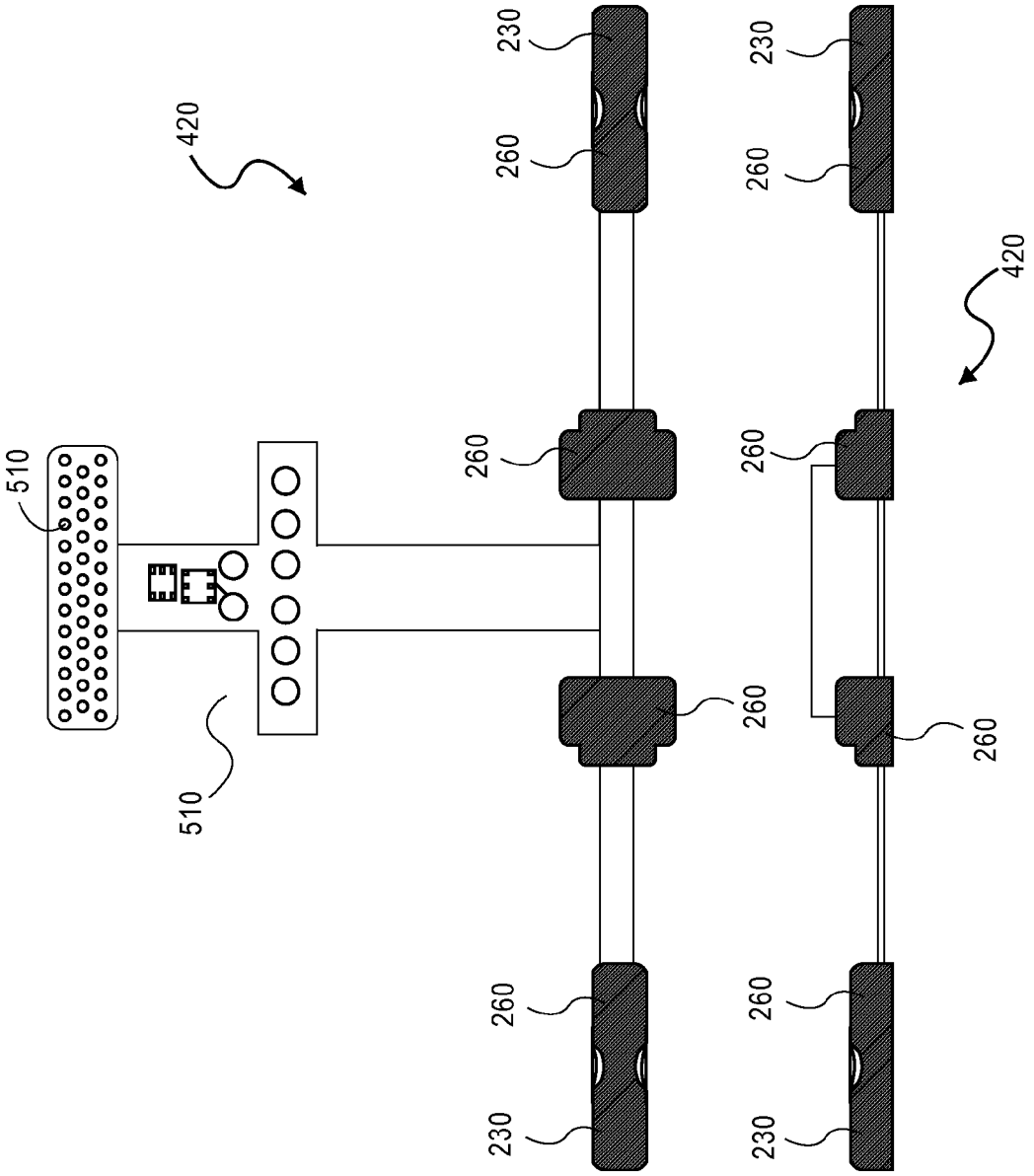

FIG. 3B

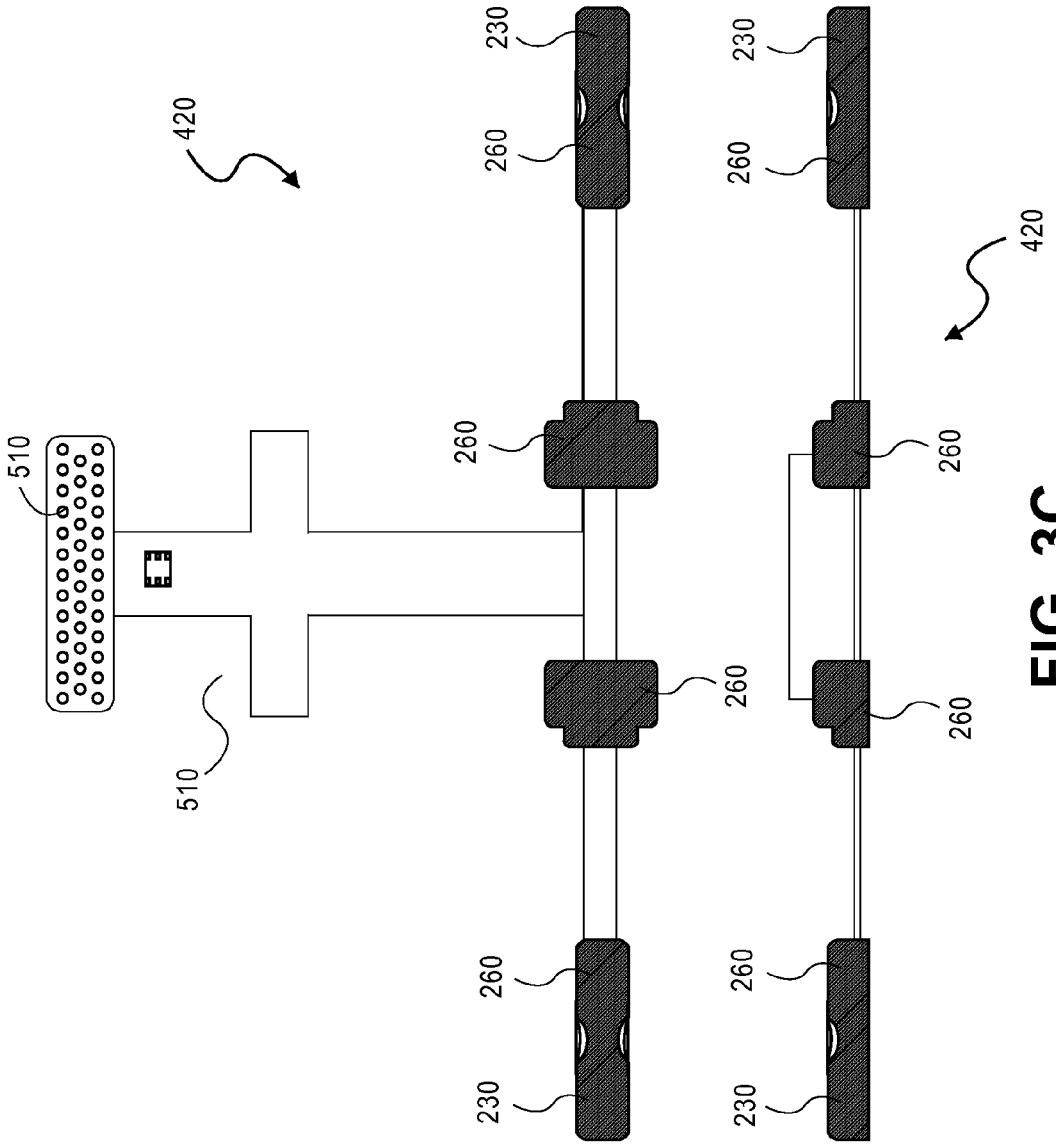

FIG. 3C

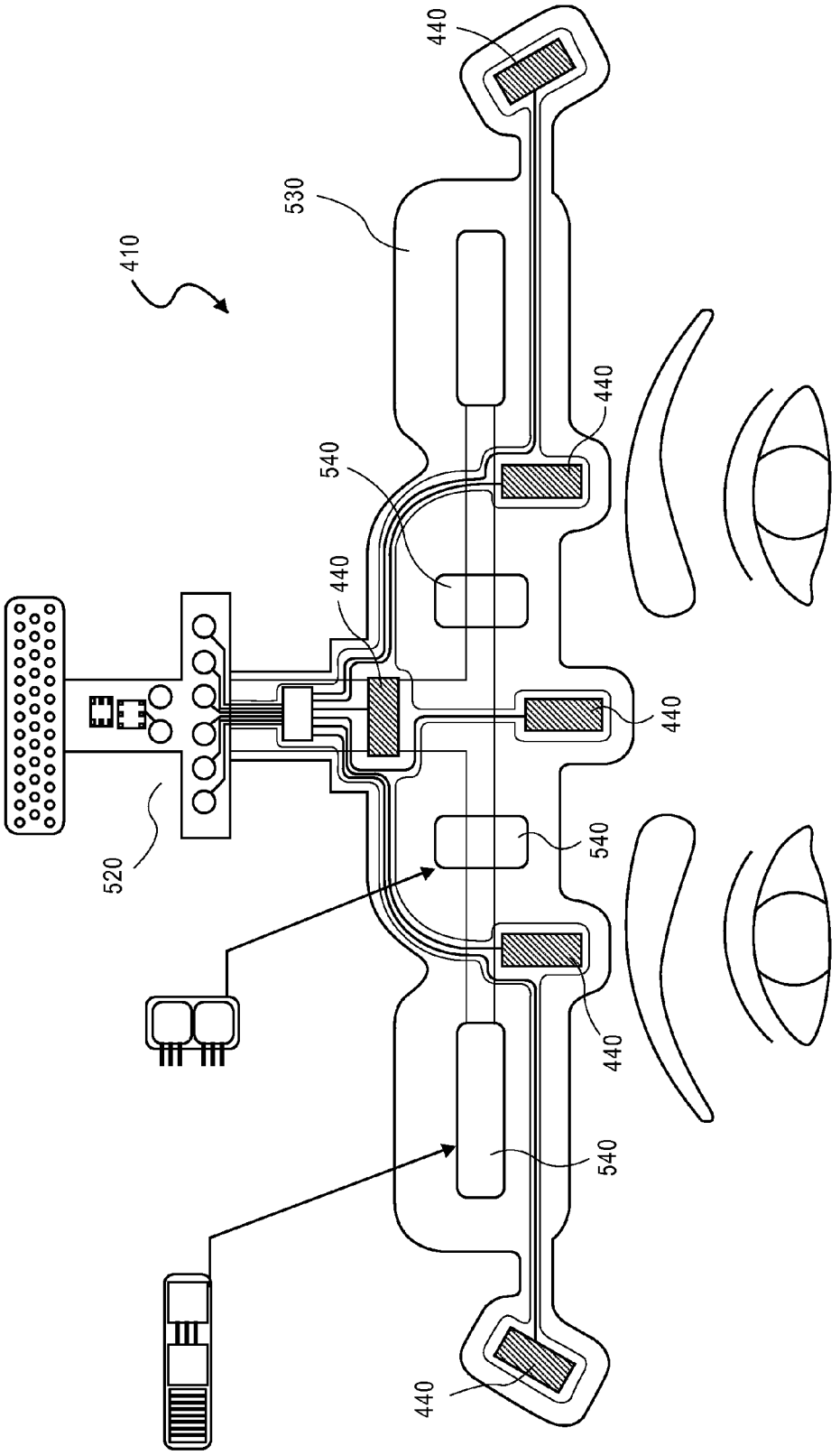

FIG. 3D

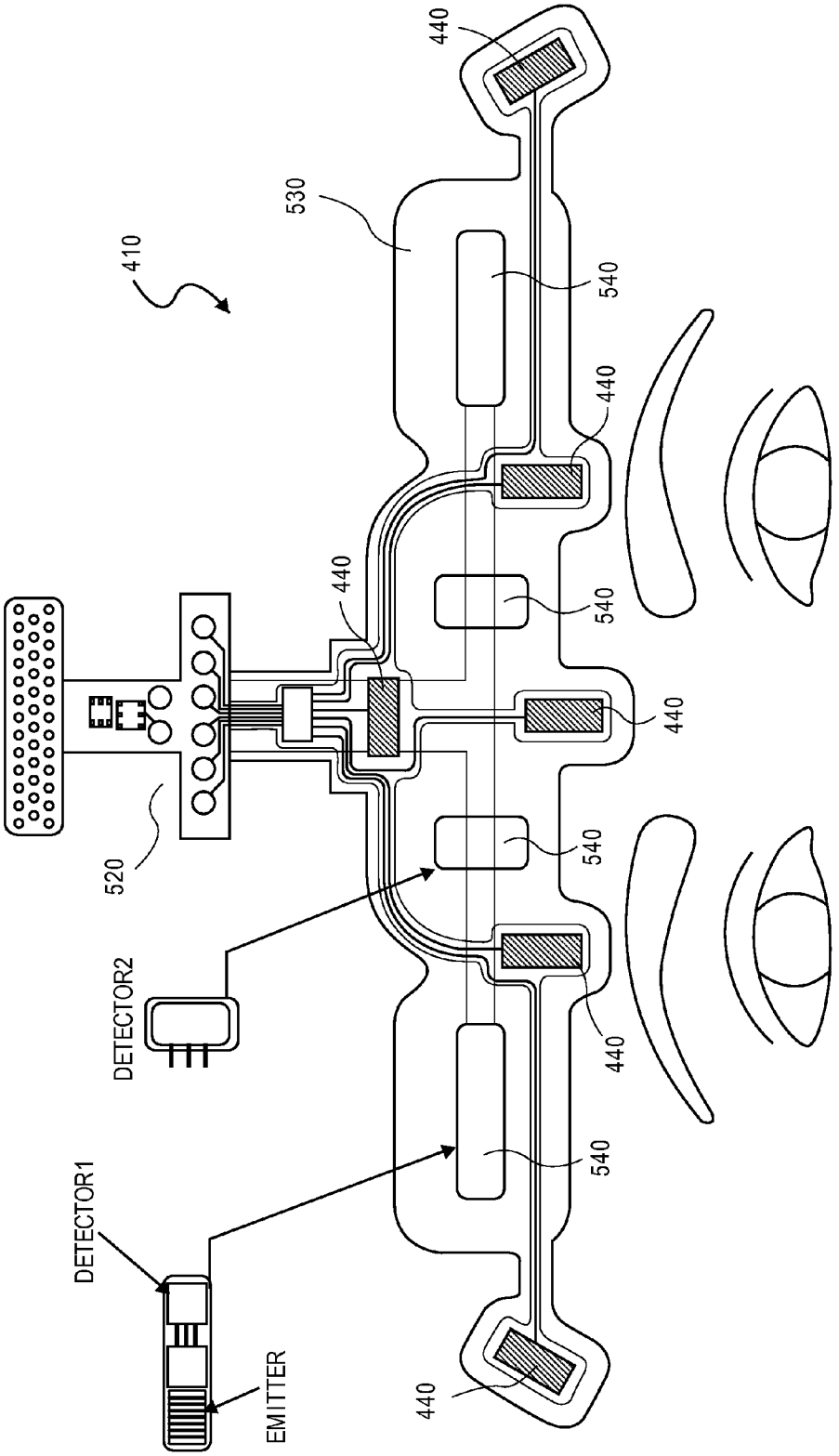

FIG. 3E

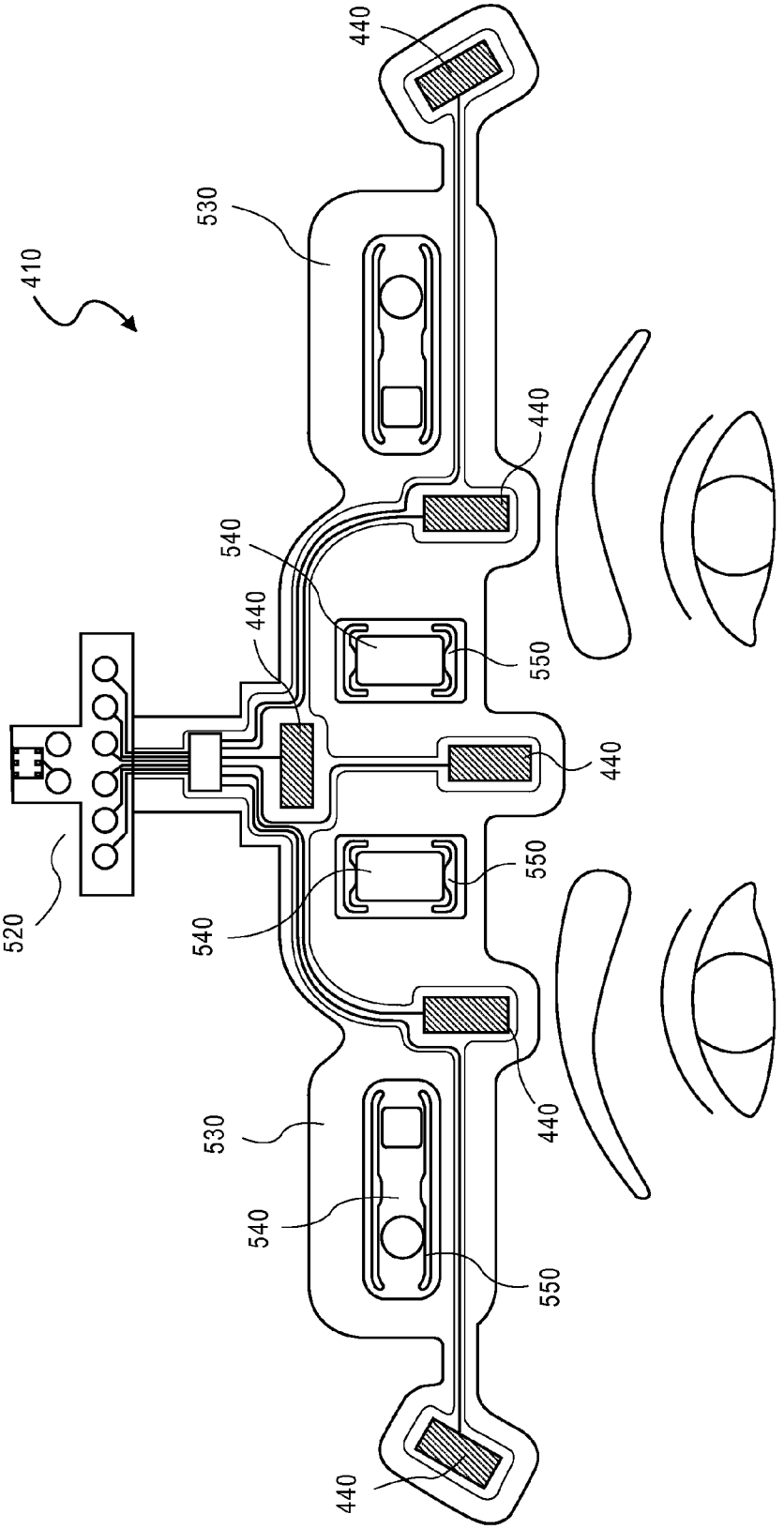

FIG. 3F

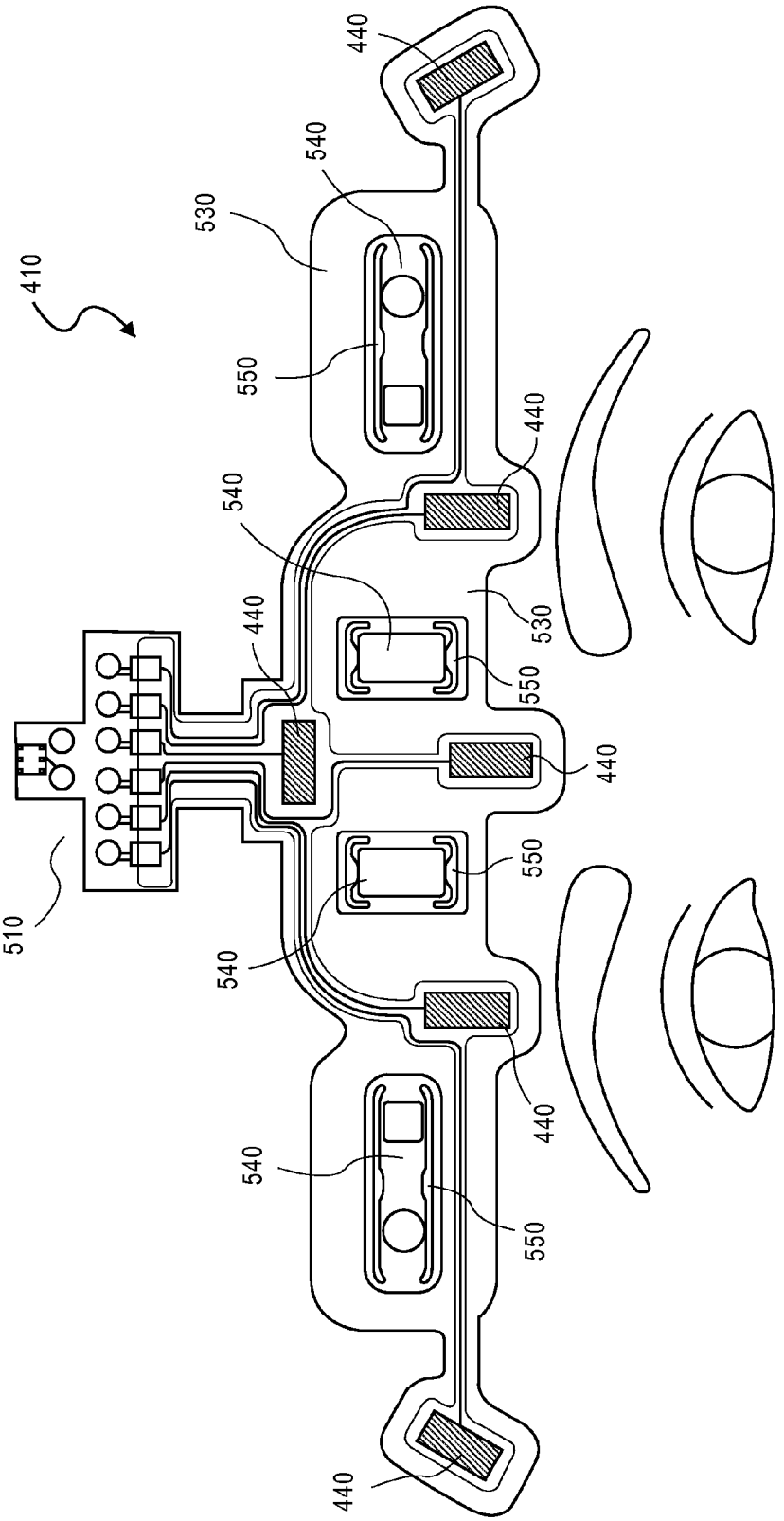

FIG. 3G

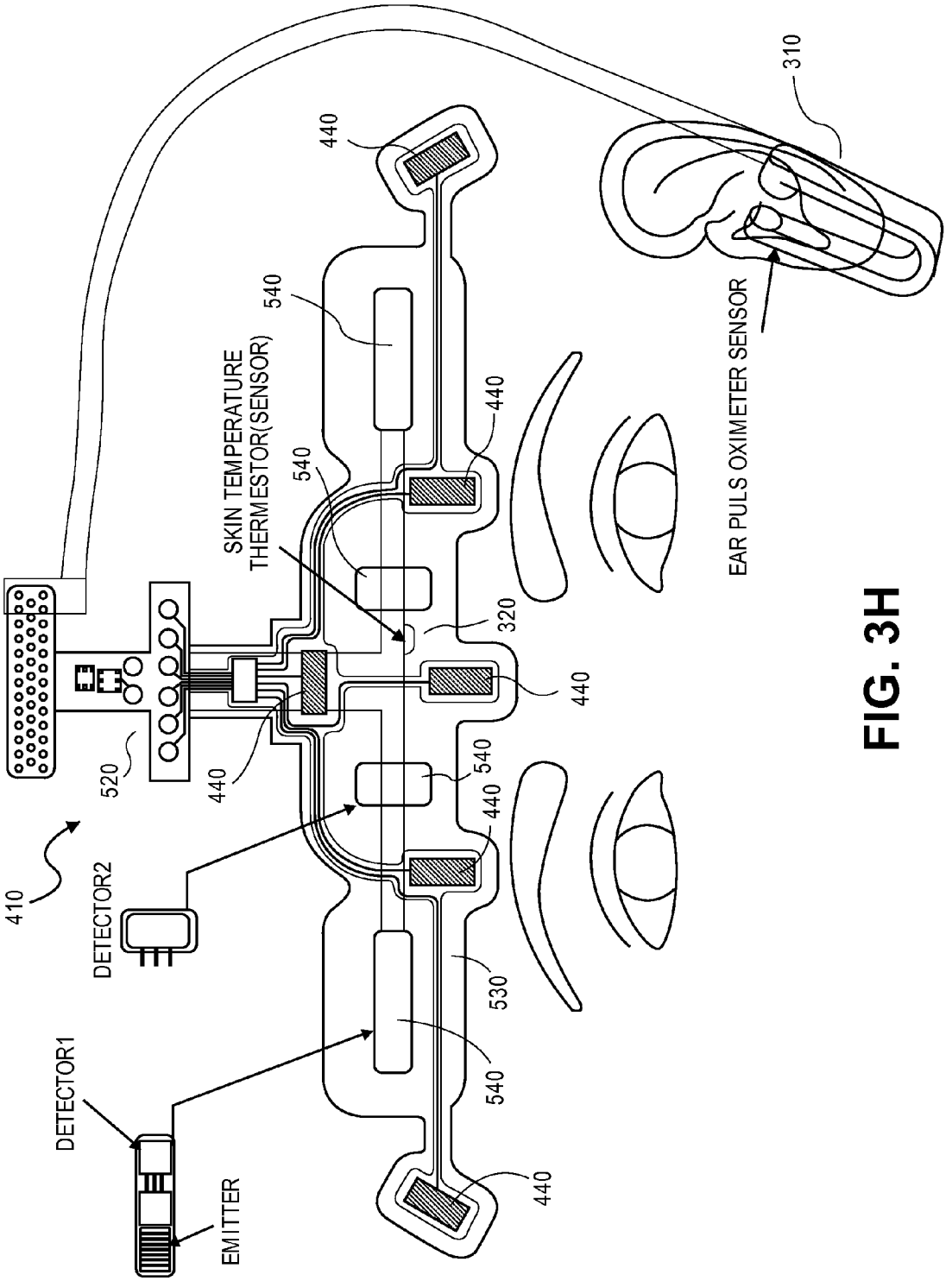
310
EAR PULS OXIMETER SENSOR
440
540
SKIN TEMPERATURE
THERMESTOR(SENSOR)
320
520
410
DETECTOR2
DETECTOR1
EMITTER
530

FIG. 3H

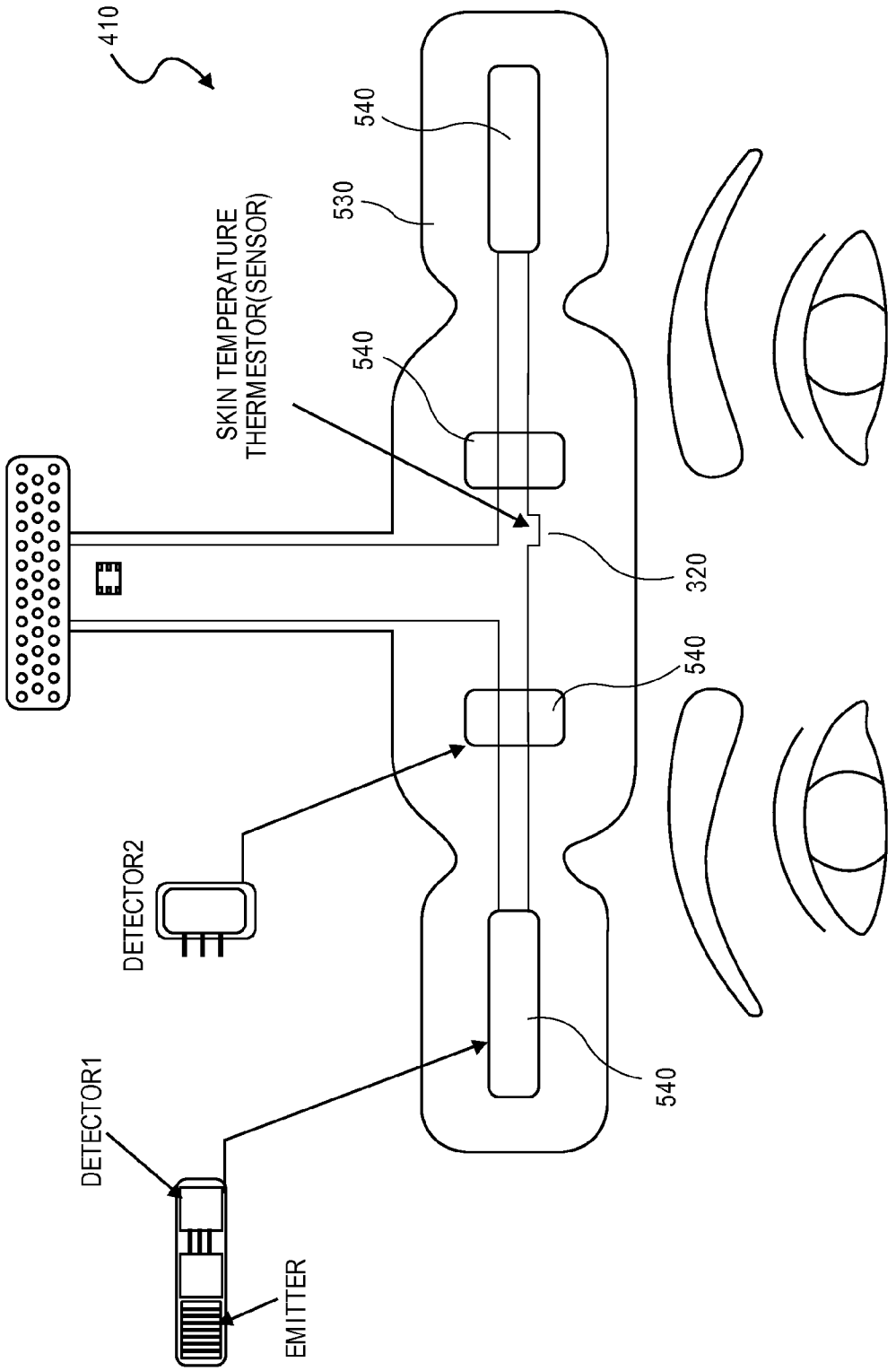
410
540
530
540
SKIN TEMPERATURE
THERMESTOR(SENSOR)
320
540
DETECTOR2
DETECTOR1
540
EMITTER

FIG. 3I

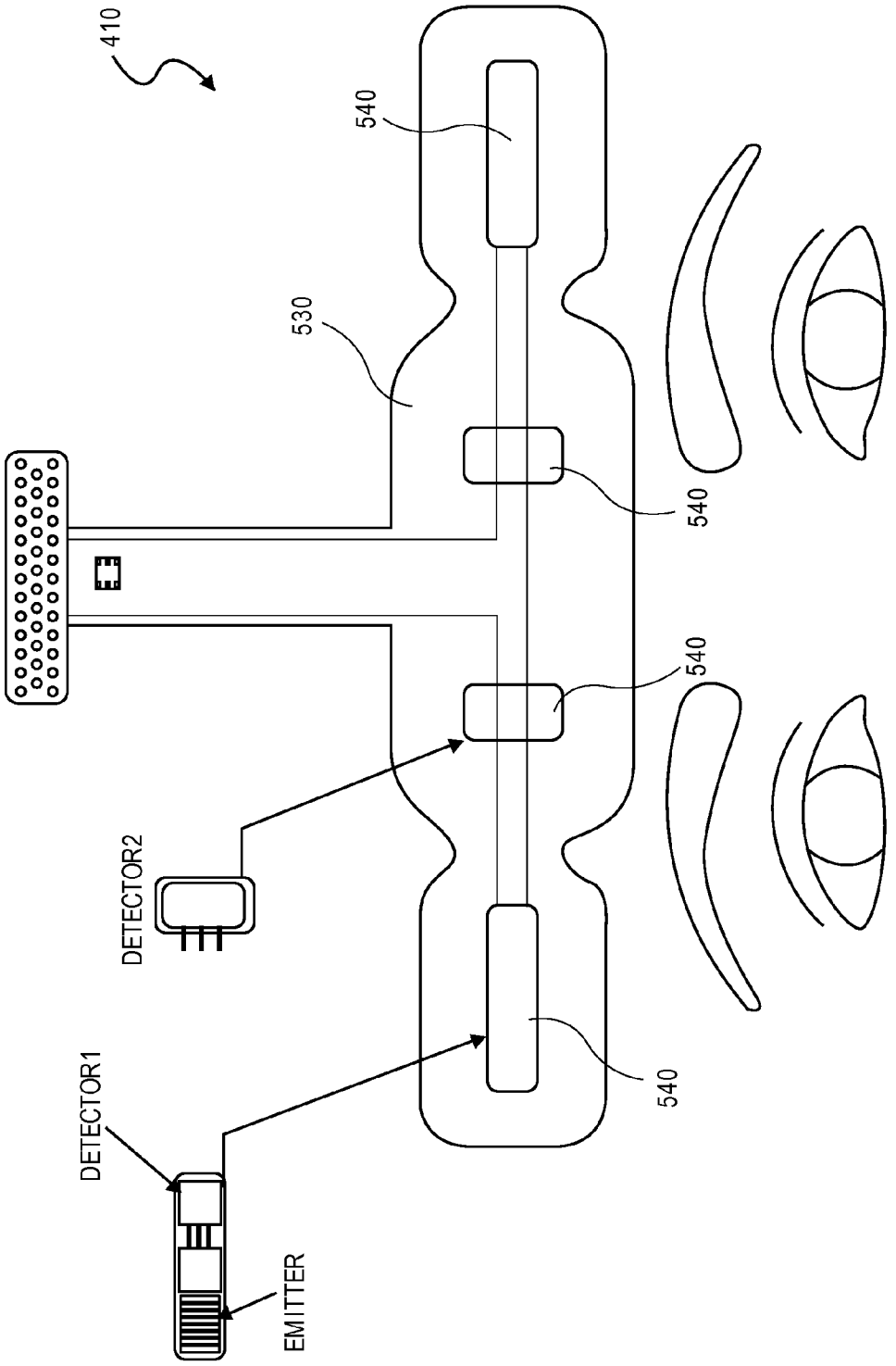

FIG. 3J

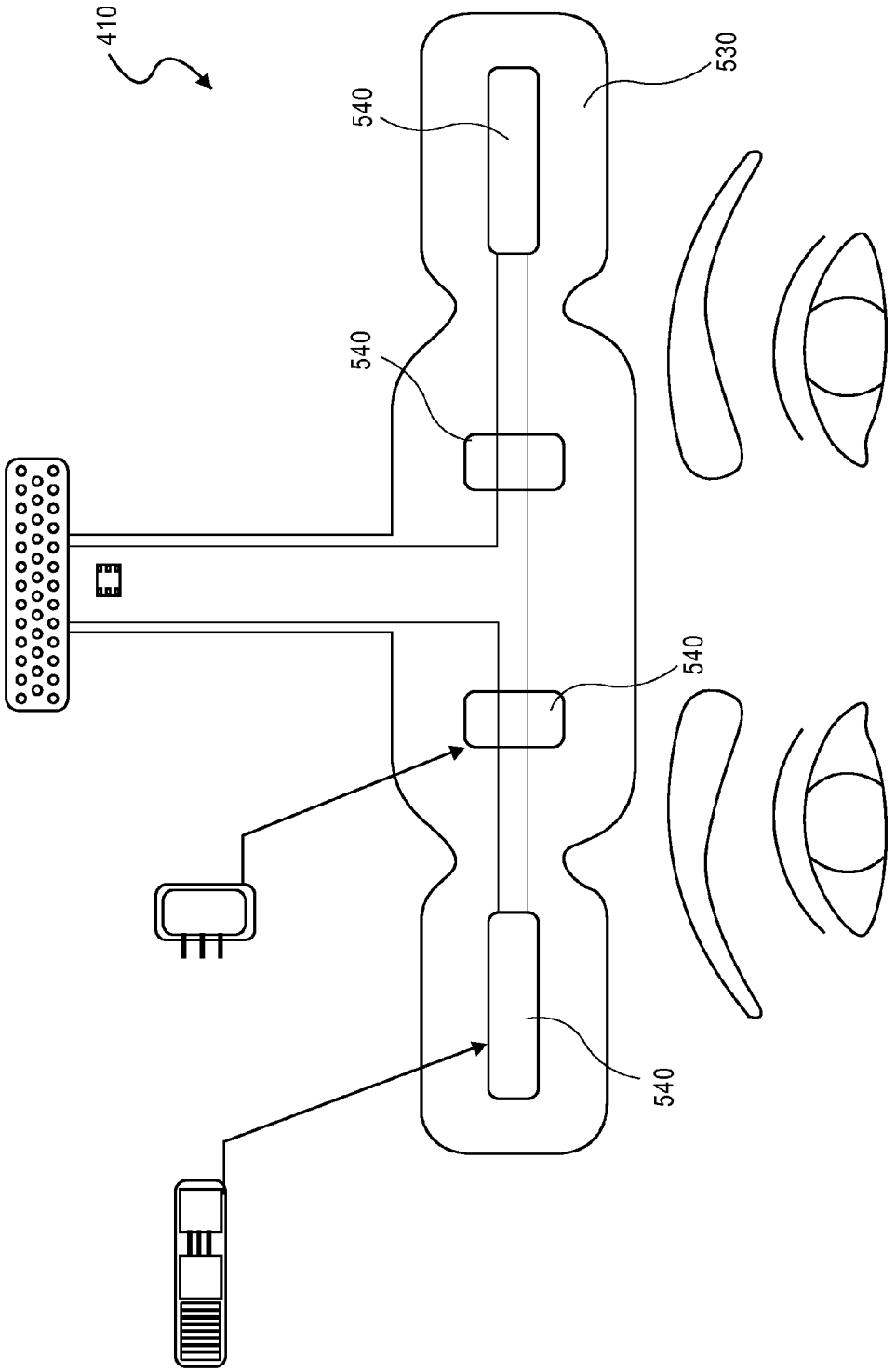

FIG. 3K

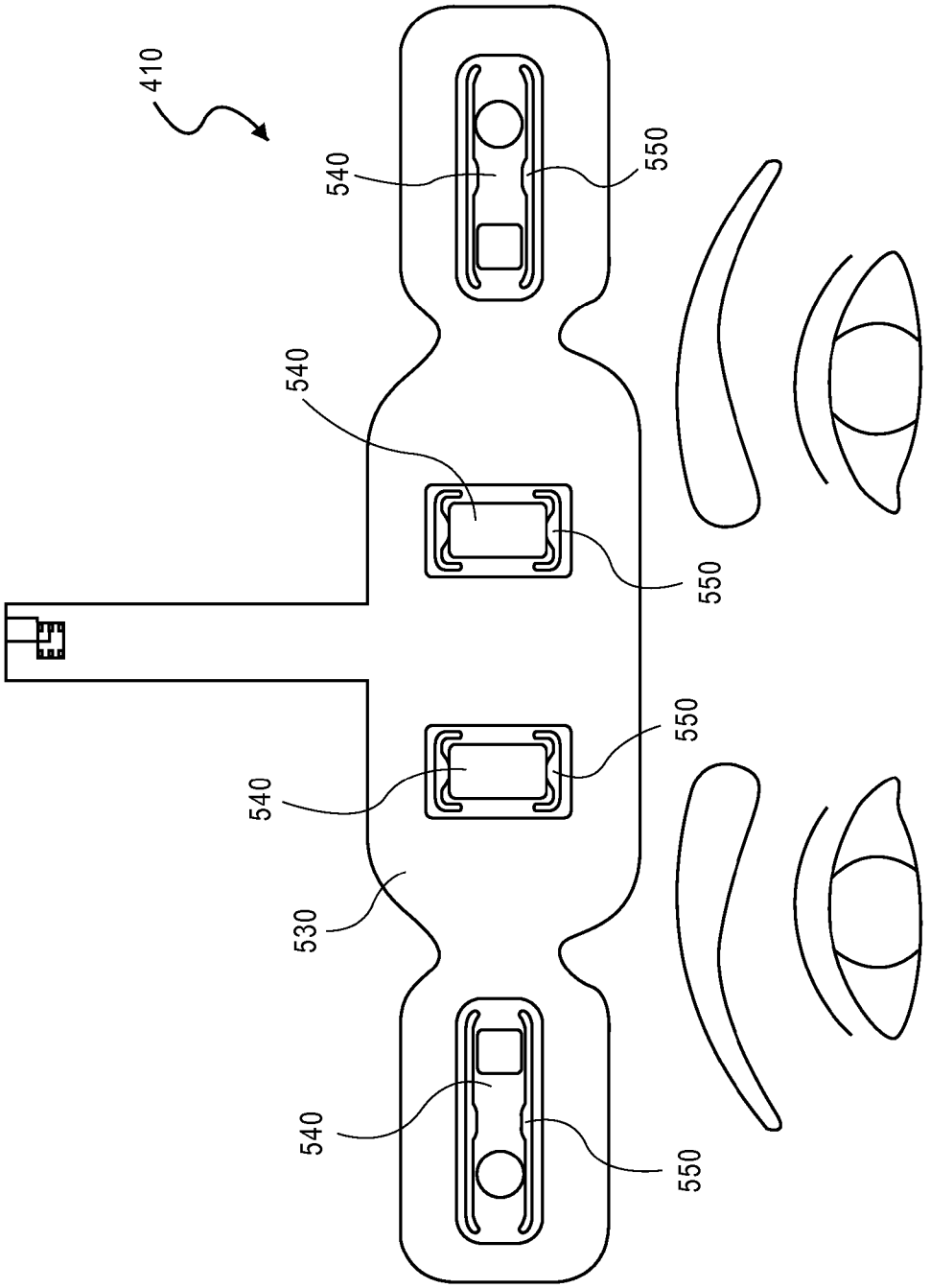

FIG. 3L

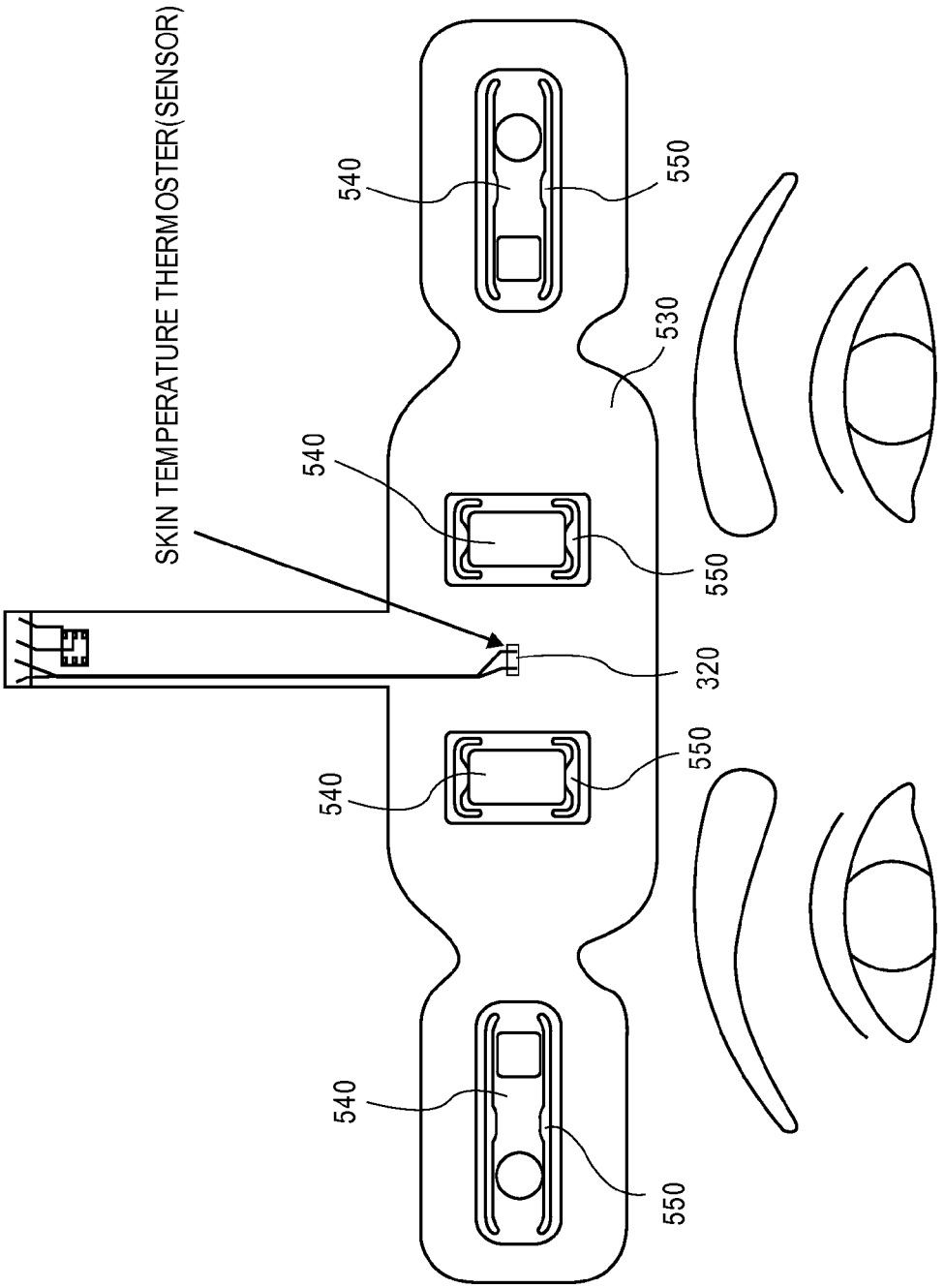
SKIN TEMPERATURE THERMOSTER(SENSOR)
540
550
530
540
550
320
550
540
540
550

FIG. 3M

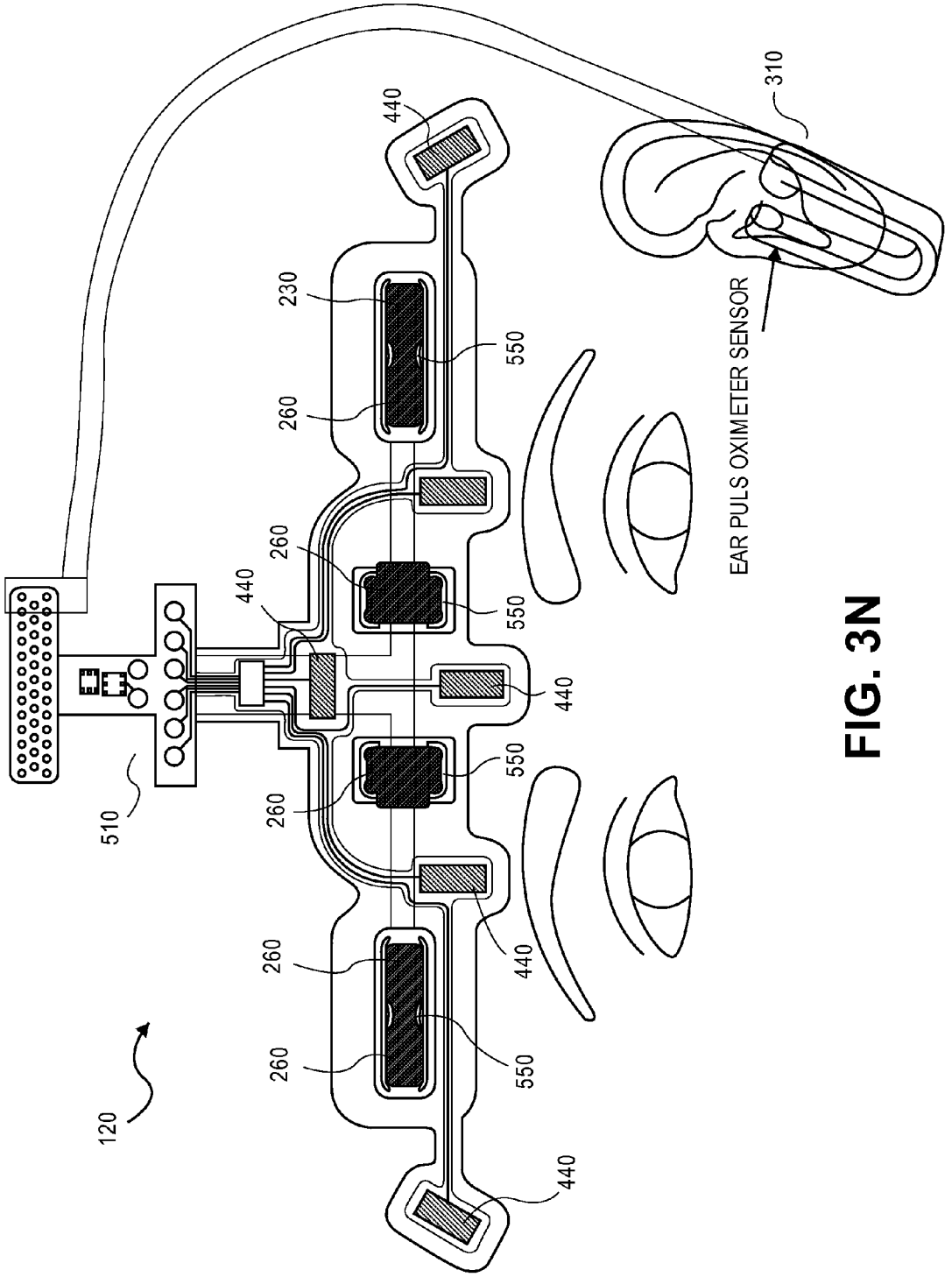
310
EAR PULS OXIMETER SENSOR
440
230
550
260
260
440
550
440
550
260
510
260
440
260
550
120
440

FIG. 3N

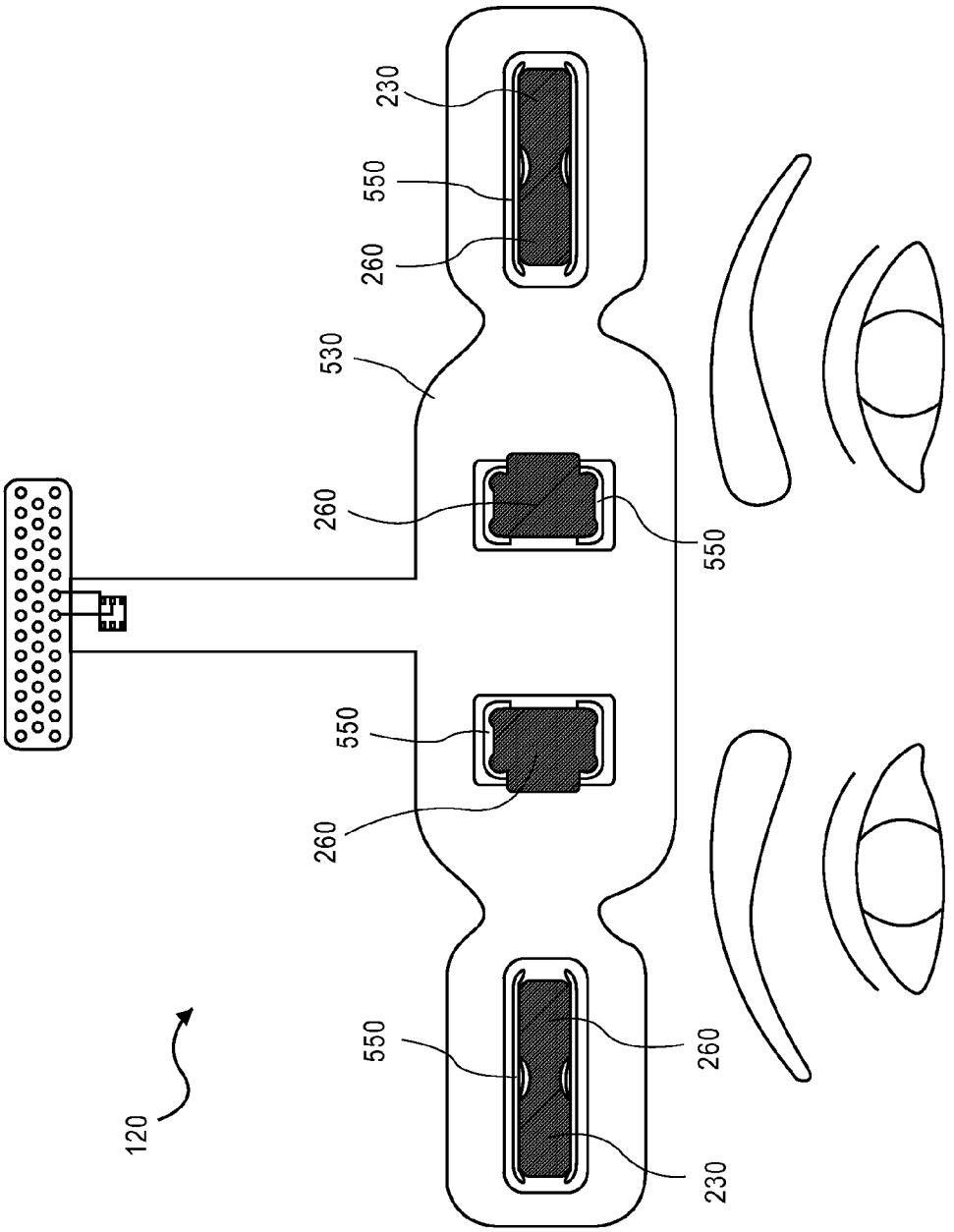

FIG. 3O

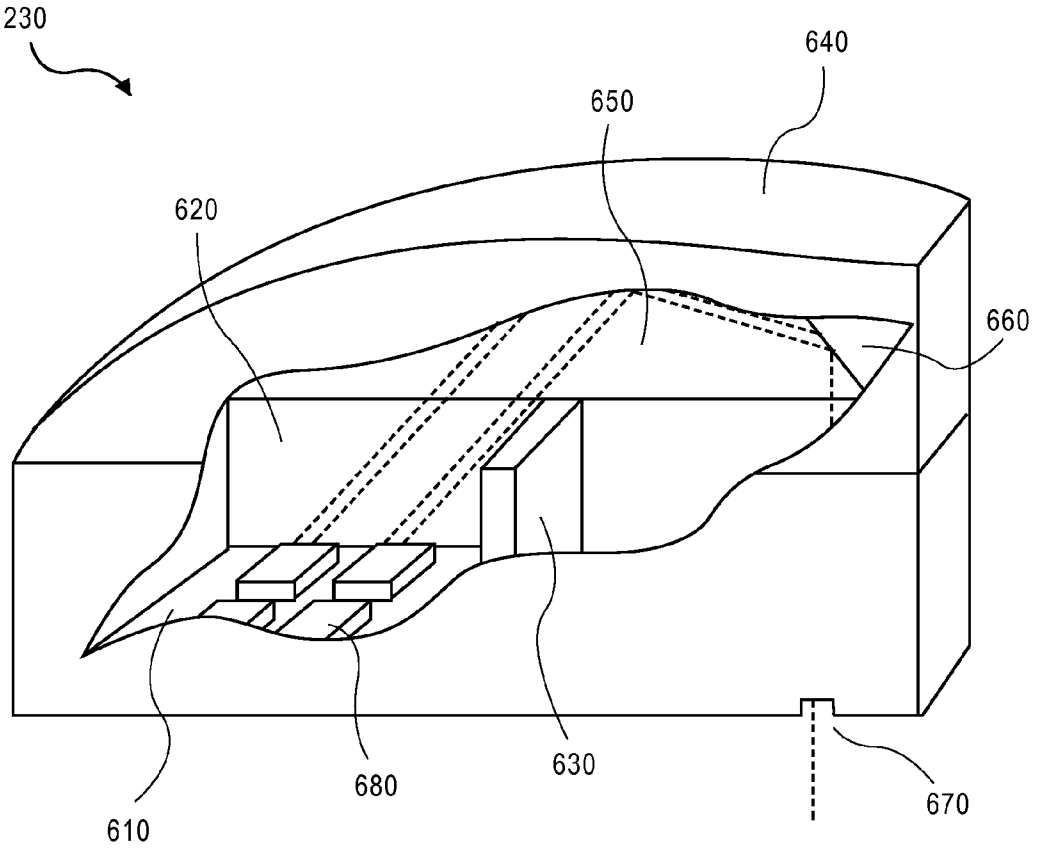

FIG. 4A

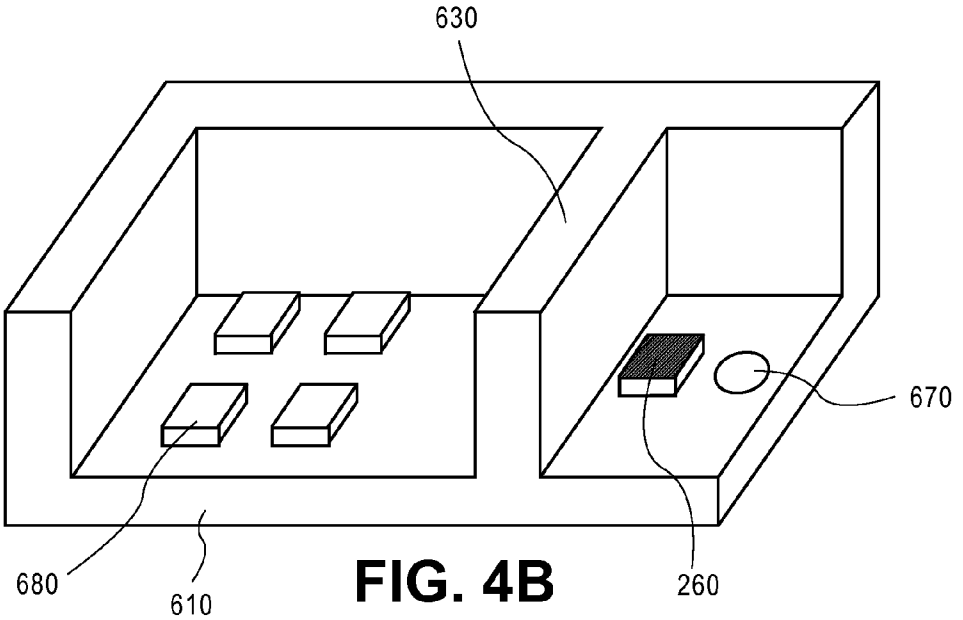
630
670
680
610
260

FIG. 4B

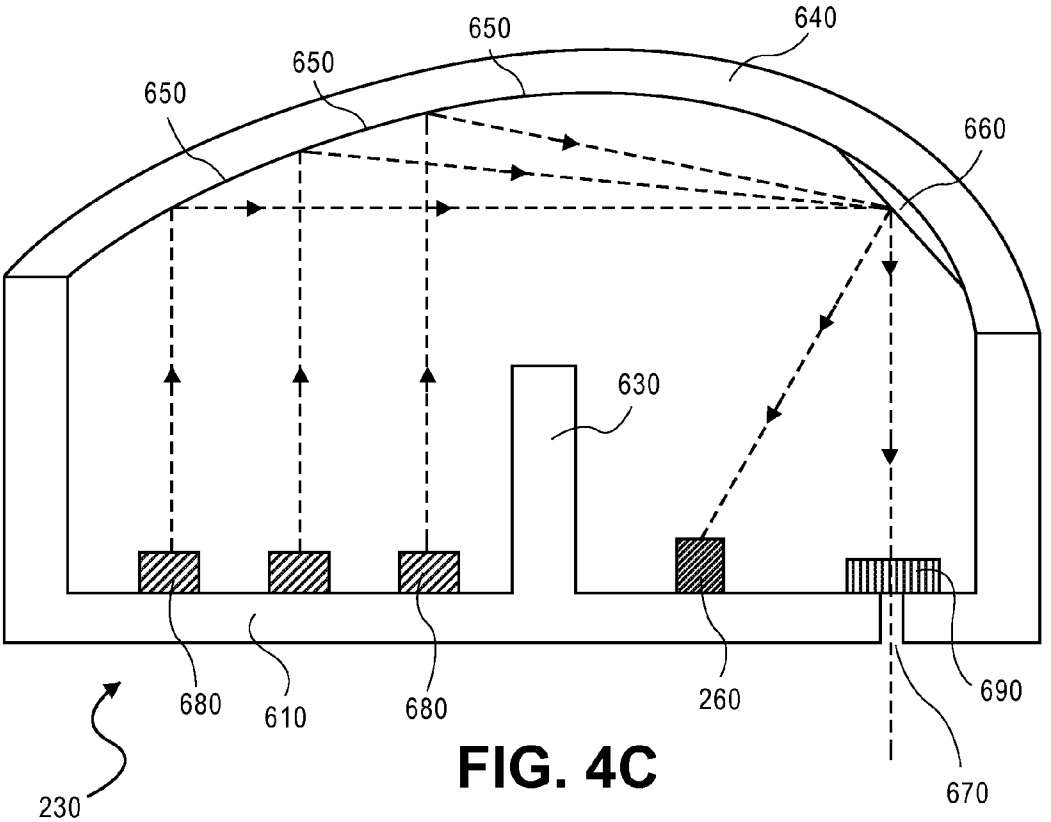
650
650
650
640
660
630
680
610
680
260
690
670
230

FIG. 4C

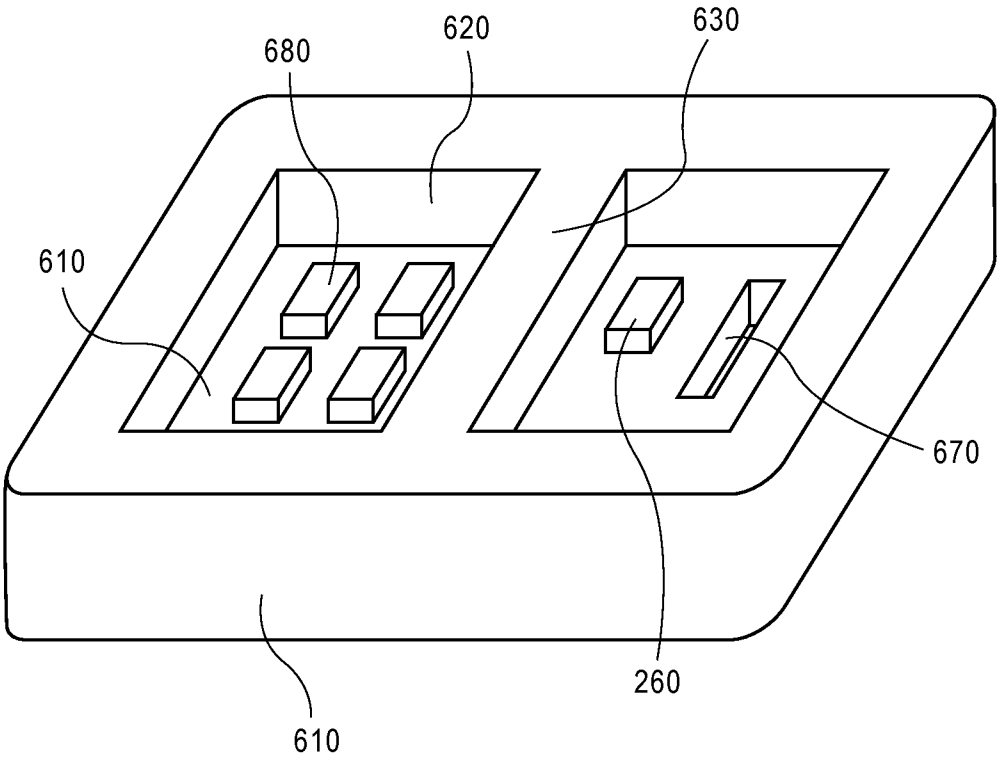

FIG. 4D

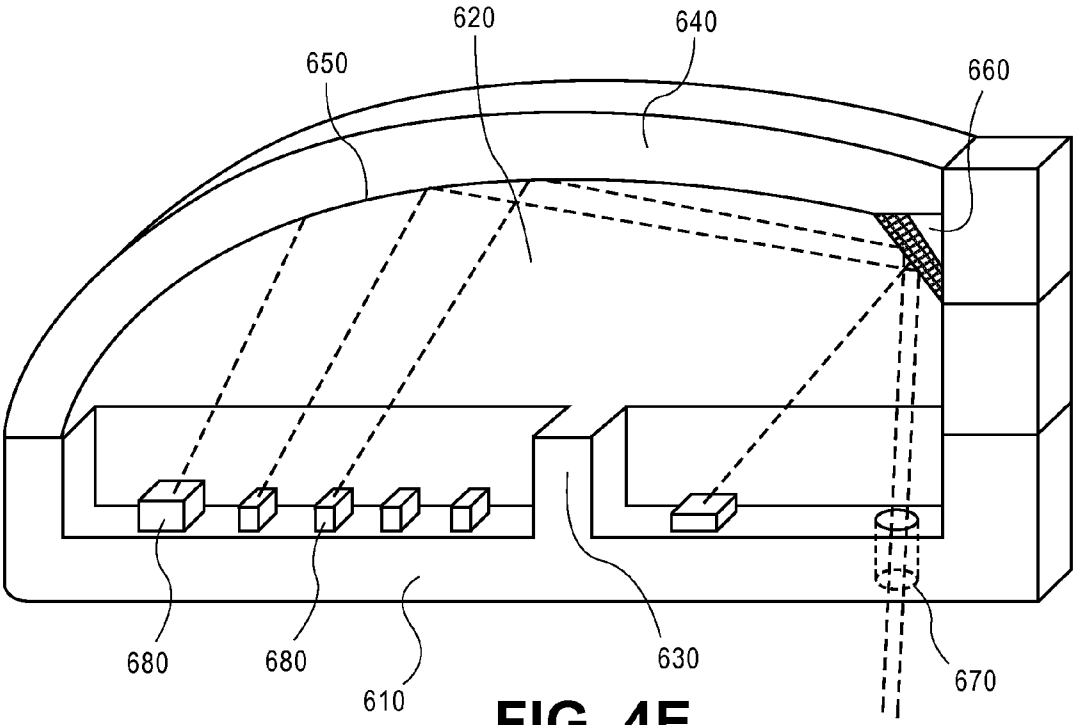

FIG. 4E

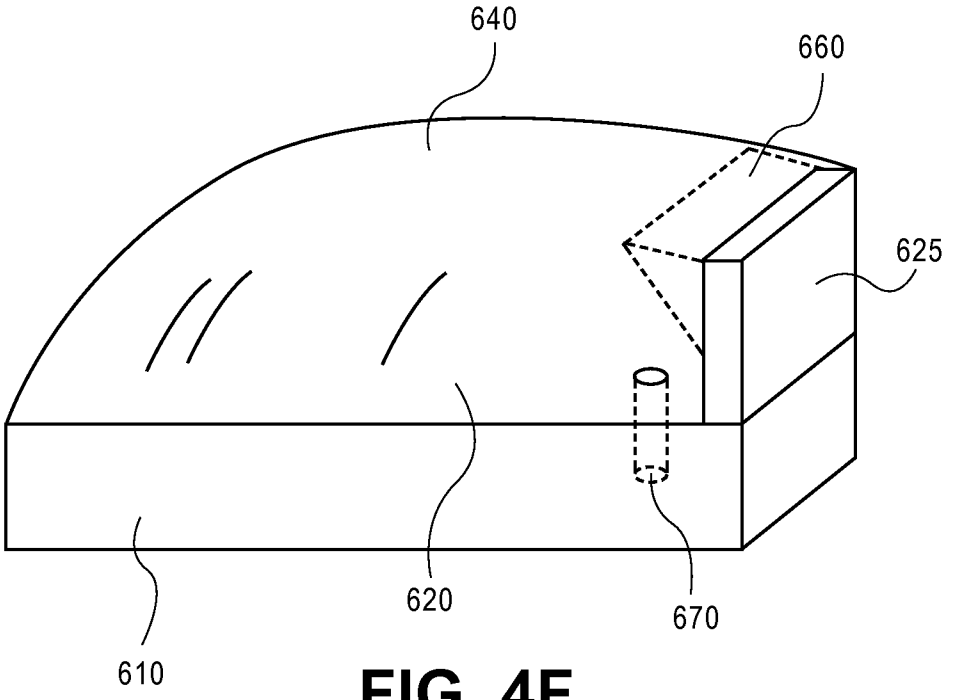

FIG. 4F

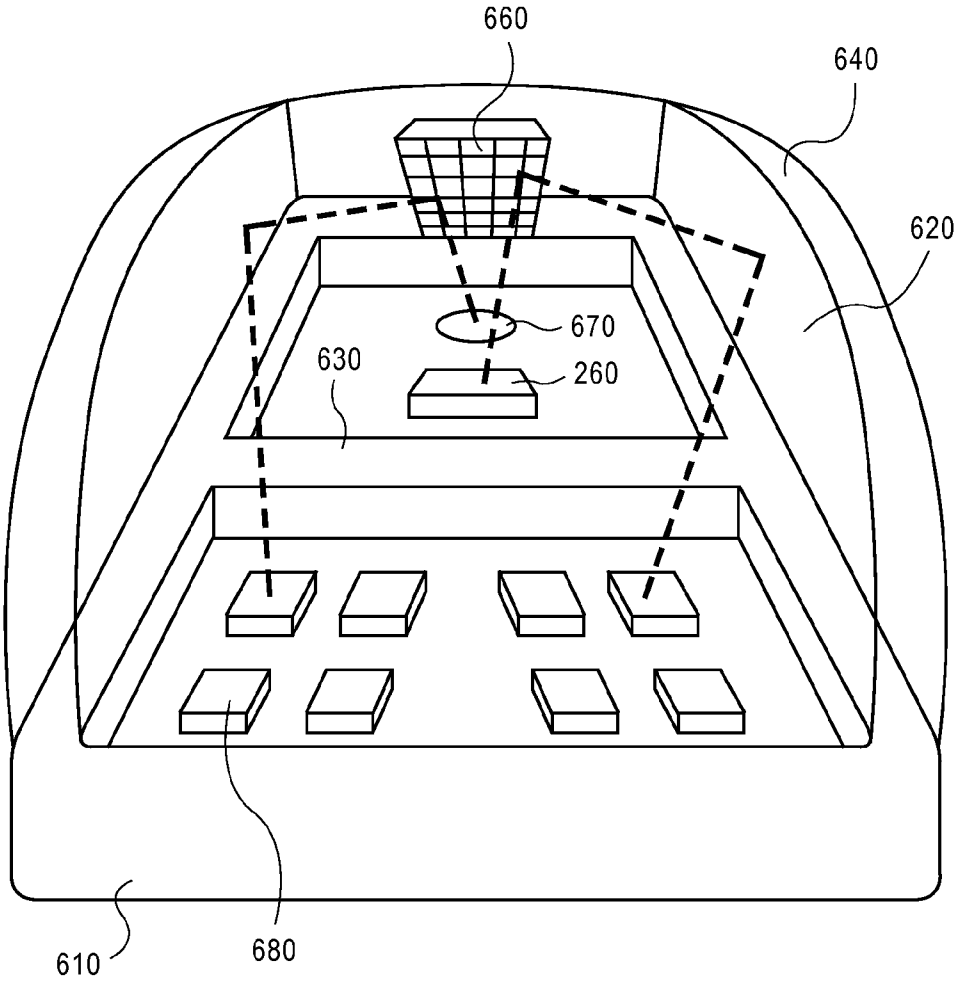

FIG. 4G

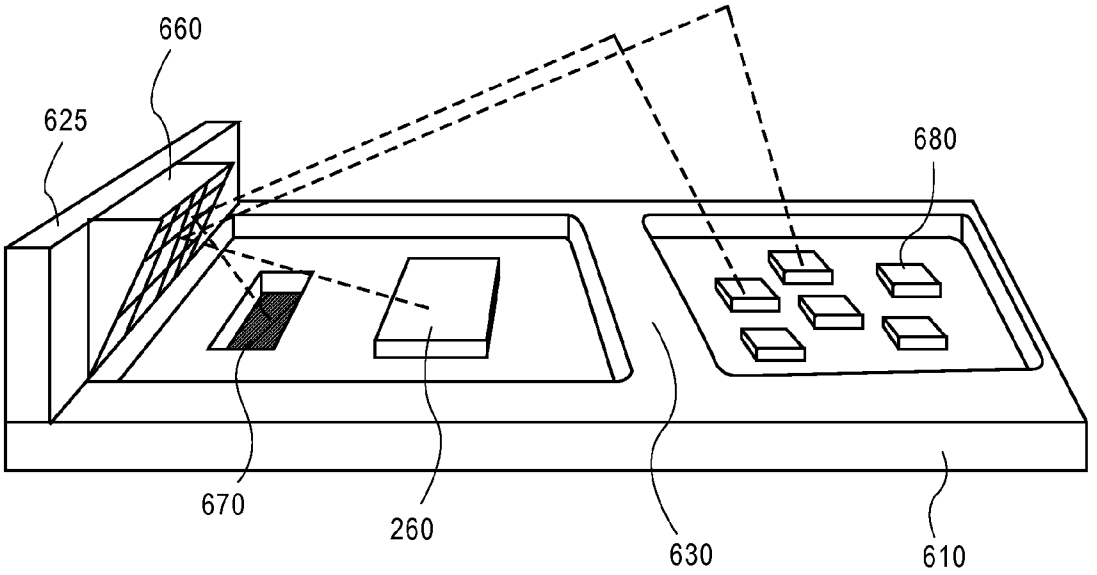

FIG. 4H

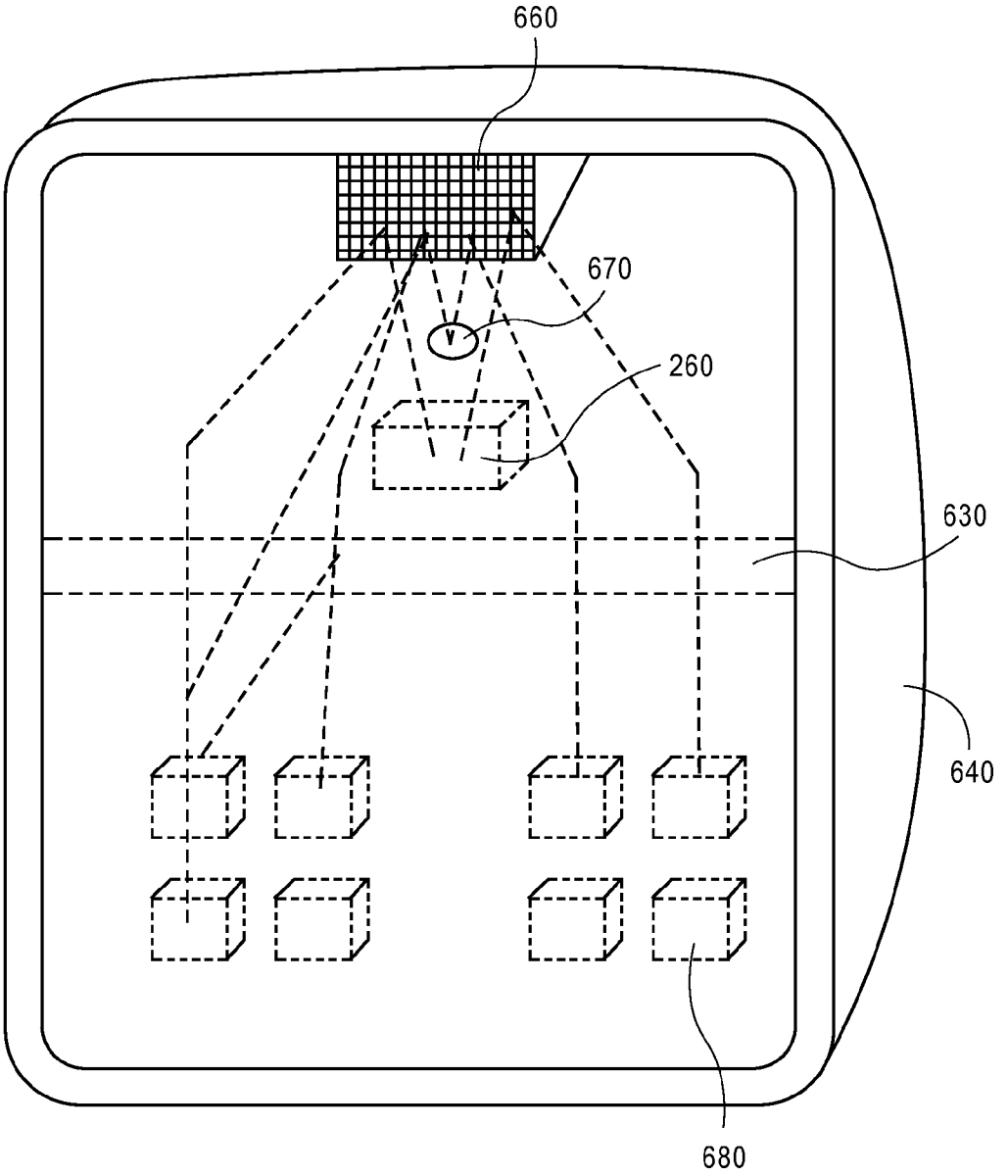

FIG. 4I

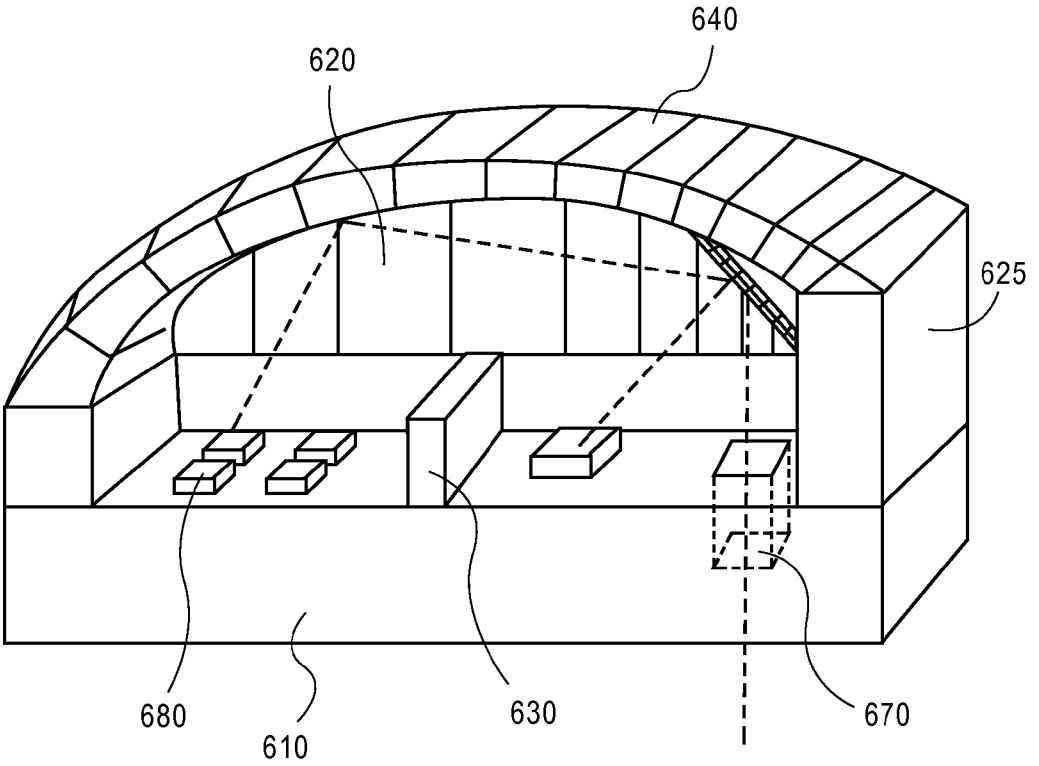

FIG. 4J

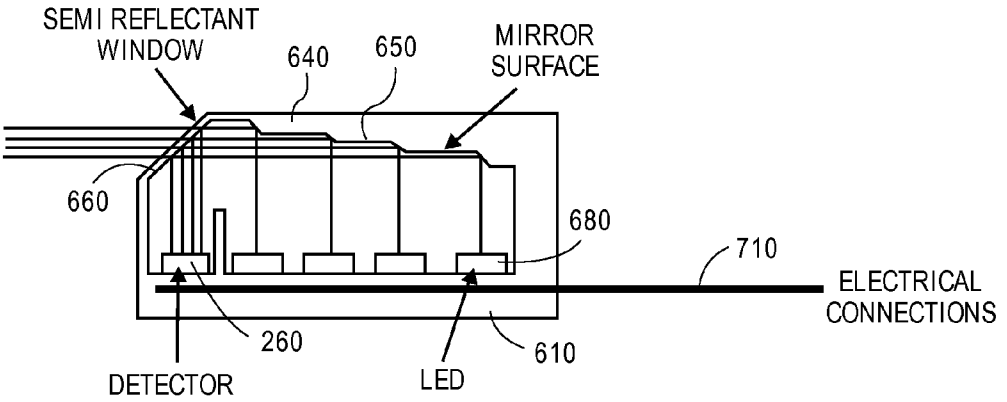

FIG. 4K

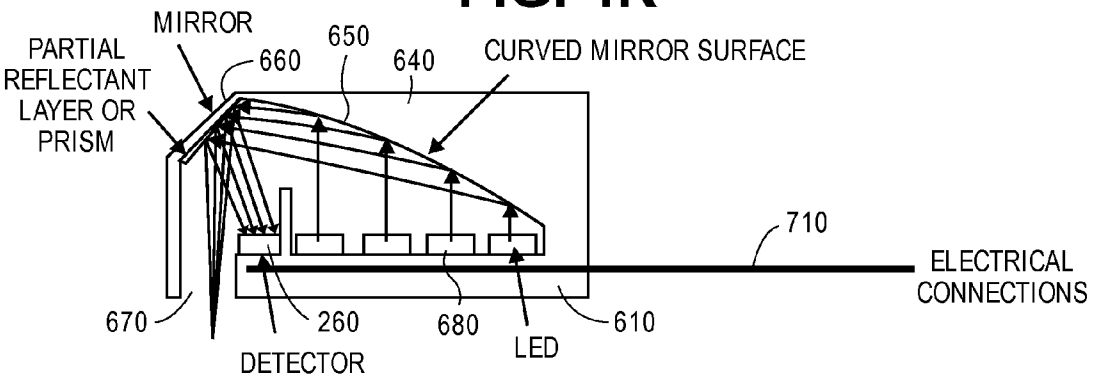

FIG. 4L

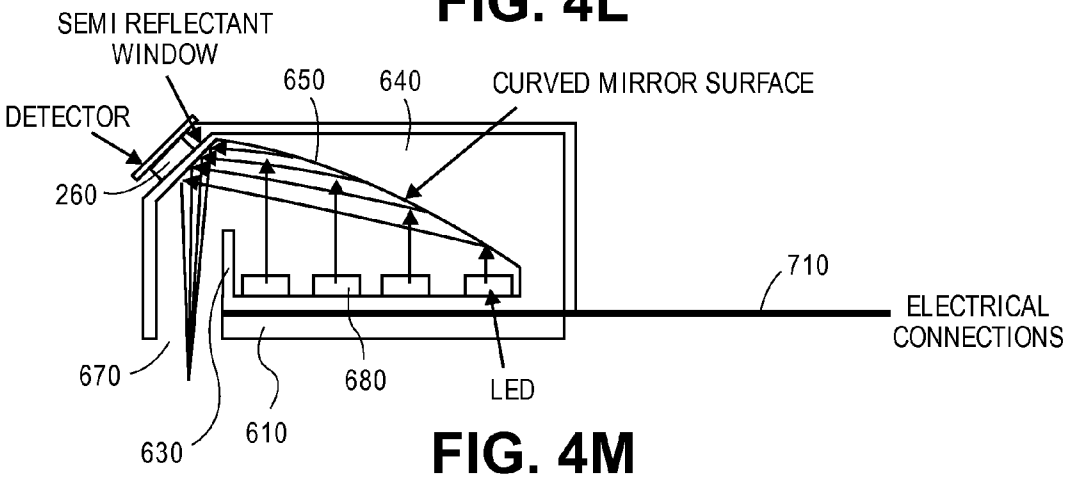

FIG. 4M

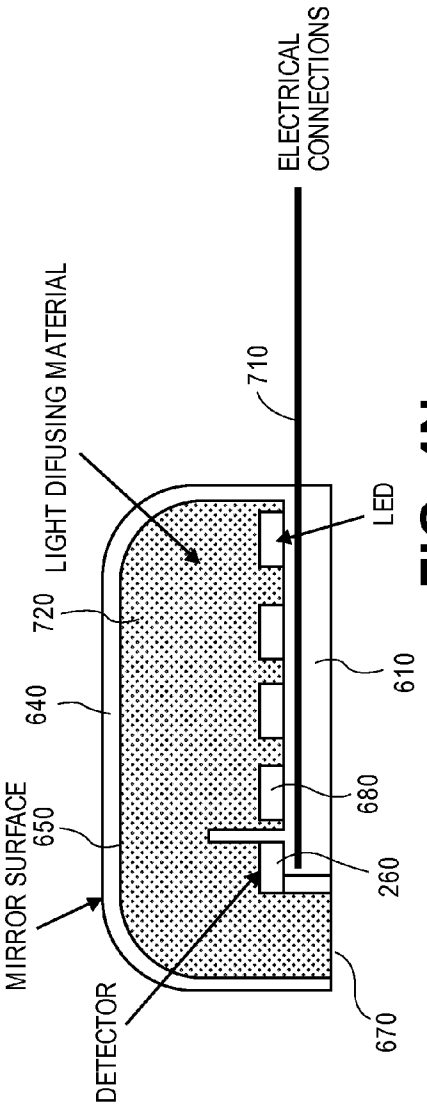
ELECTRICAL CONNECTIONS
710
LIGHT DIFUSING MATERIAL
720
640
MIRROR SURFACE
650
DETECTOR
LED
610
680
260
670

FIG. 4N

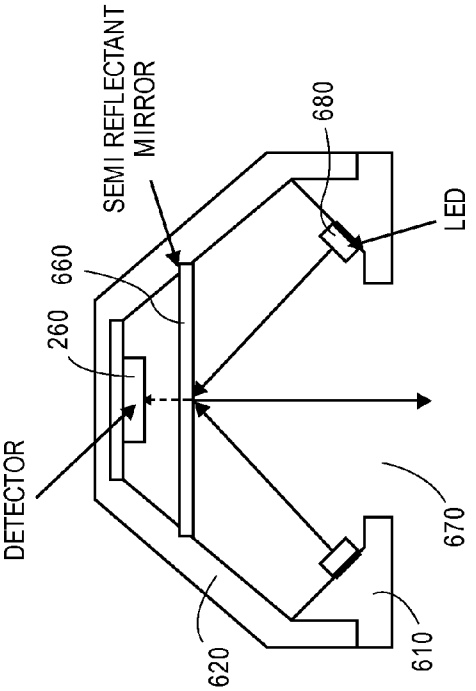
SEMI REFLECTANT MIRROR
680
LED
660
260
DETECTOR
670
620
610

FIG. 4O

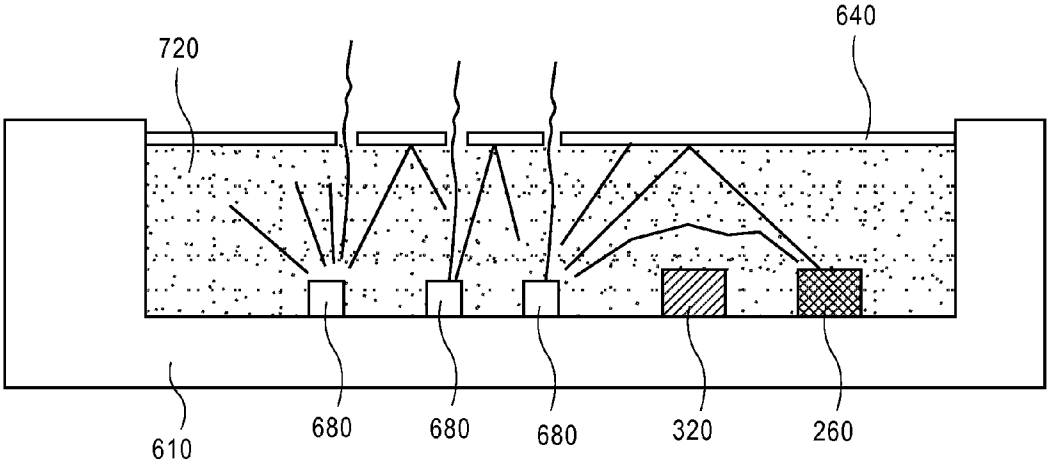

FIG. 4P

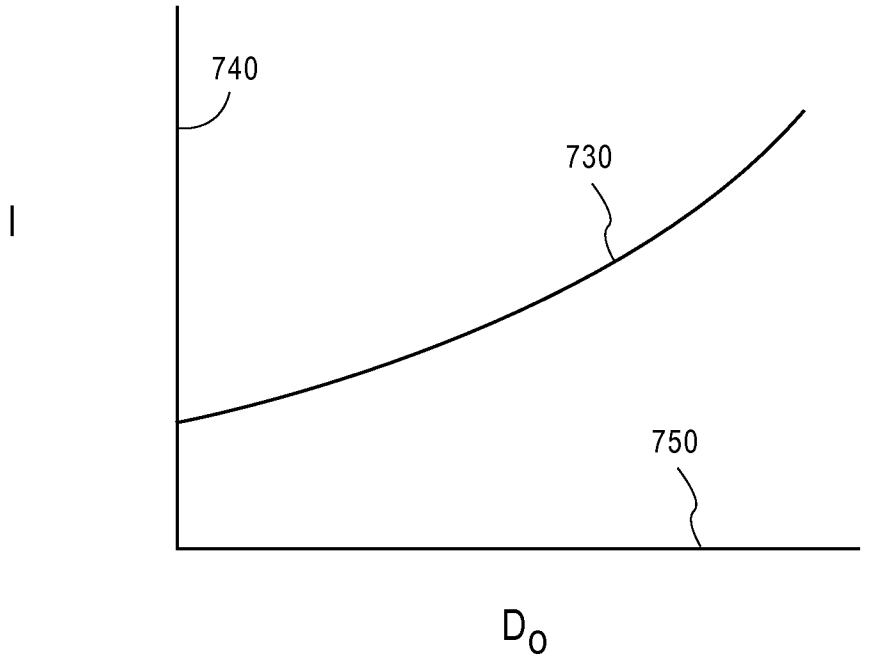

FIG. 5

FIG. 6

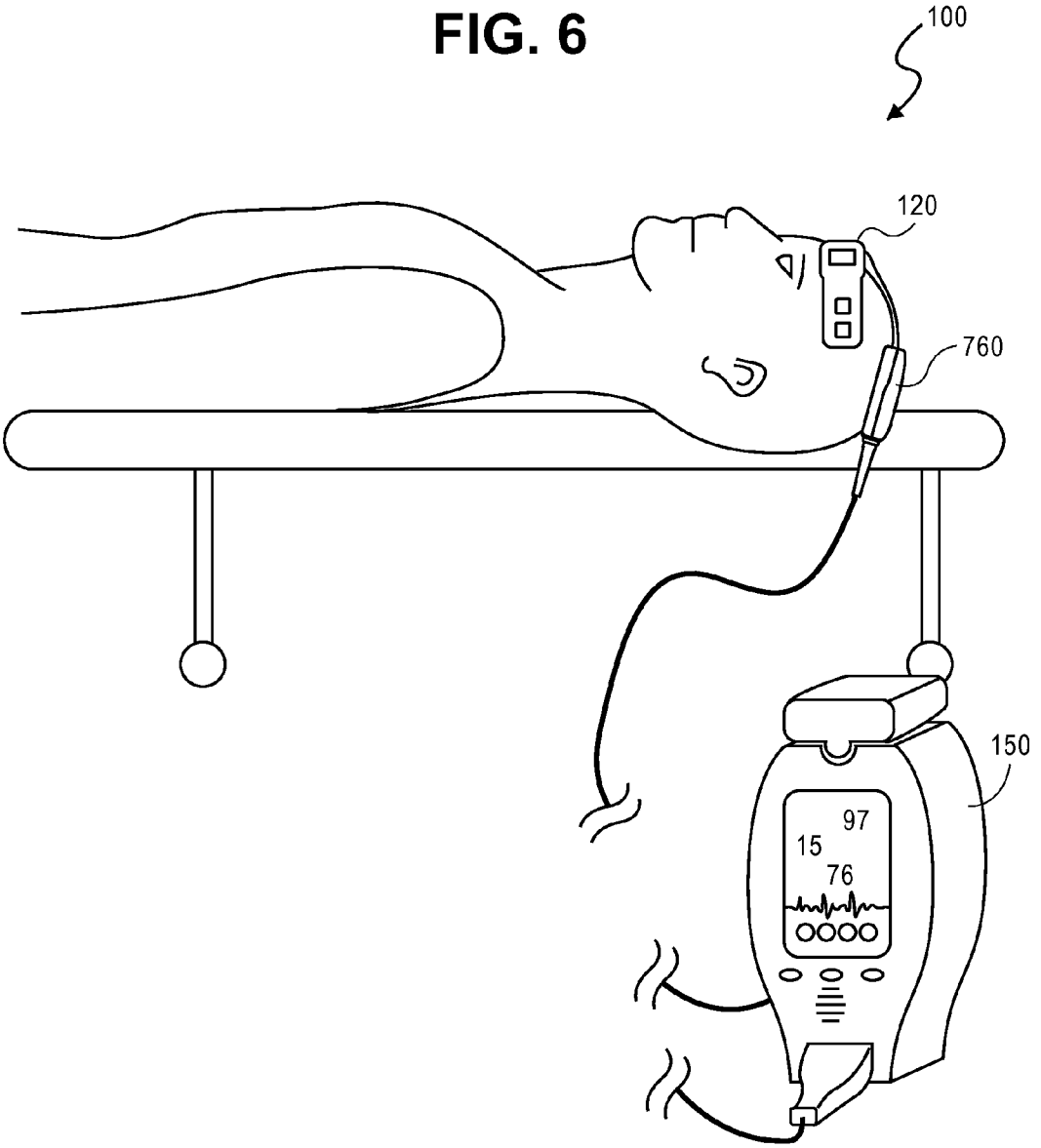

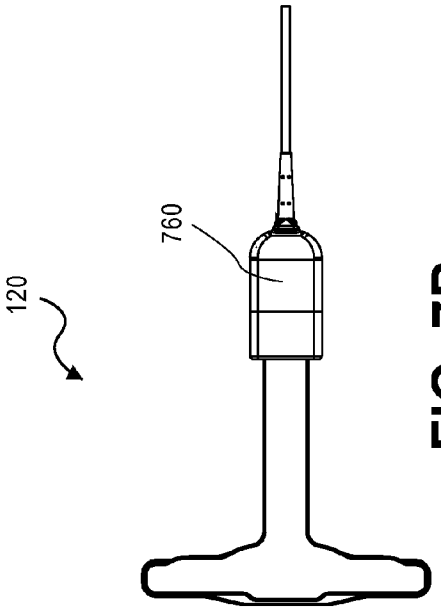

FIG. 7B

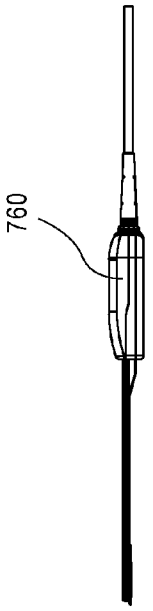

FIG. 7C

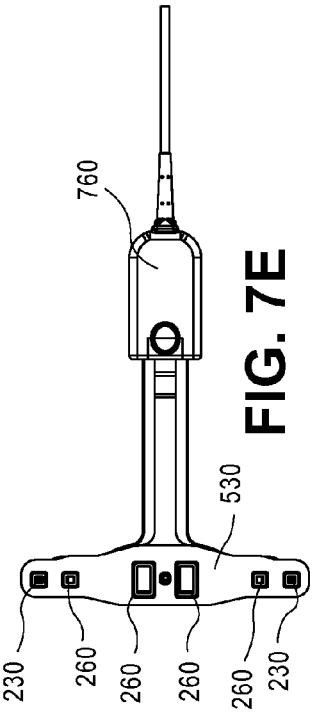

FIG. 7E

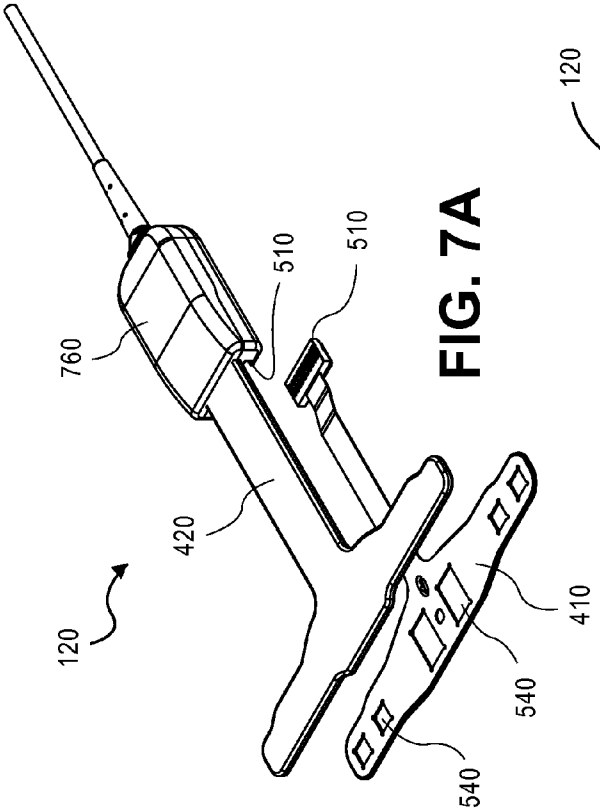

FIG. 7A

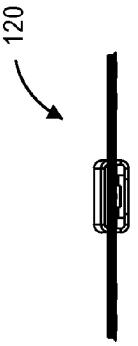

FIG. 7D

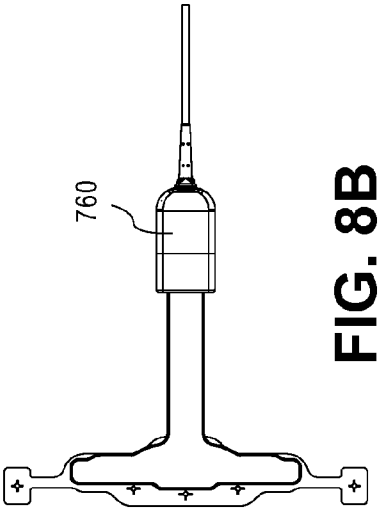

FIG. 8B

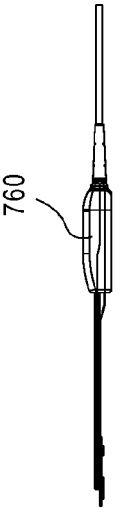

FIG. 8C

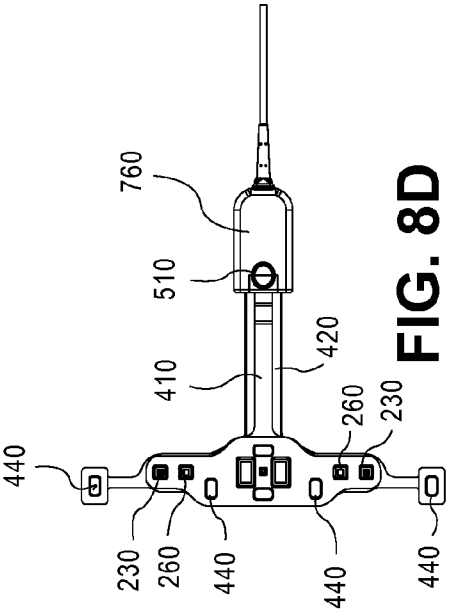

FIG. 8D

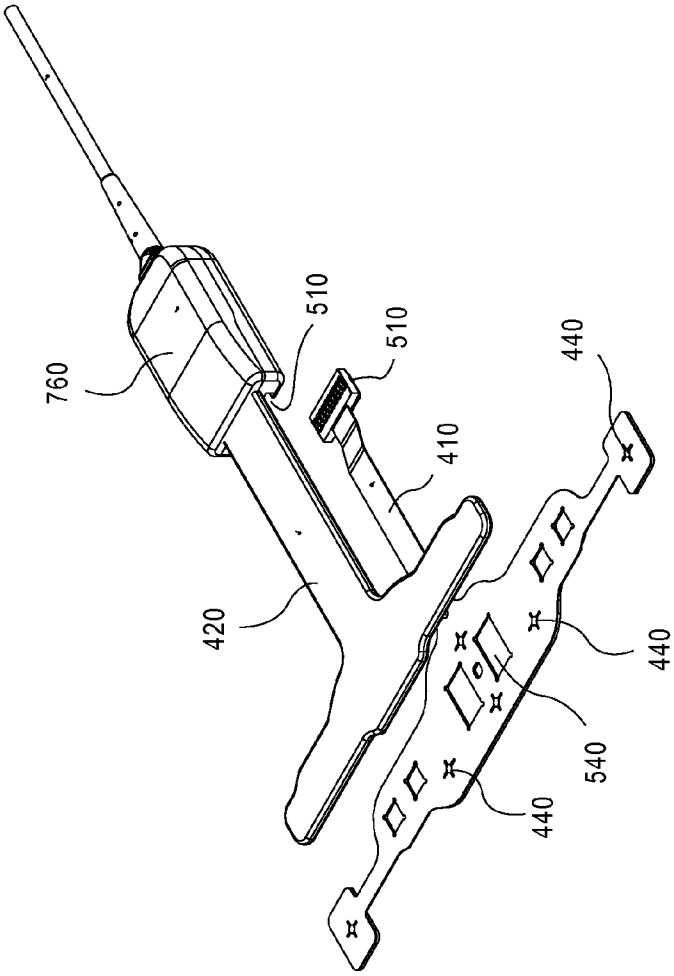

FIG. 8A

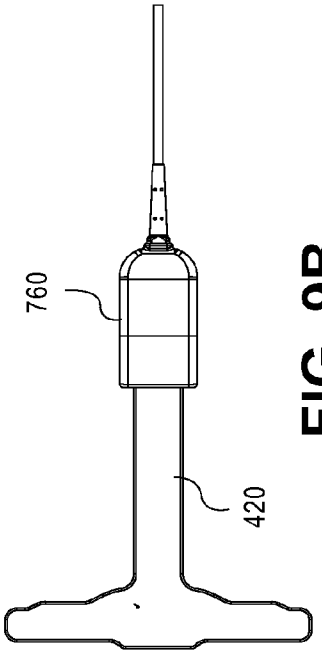

FIG. 9B

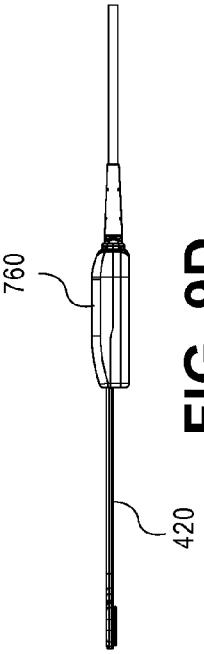

FIG. 9D

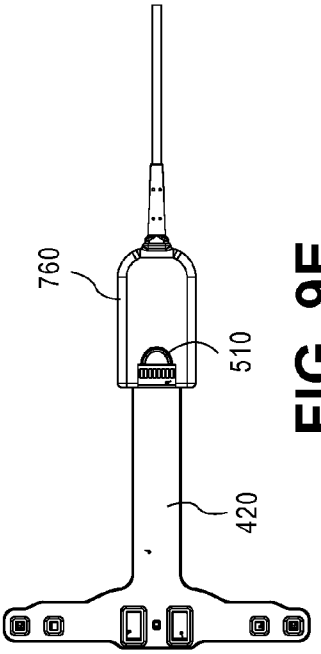

FIG. 9E

FIG. 9C

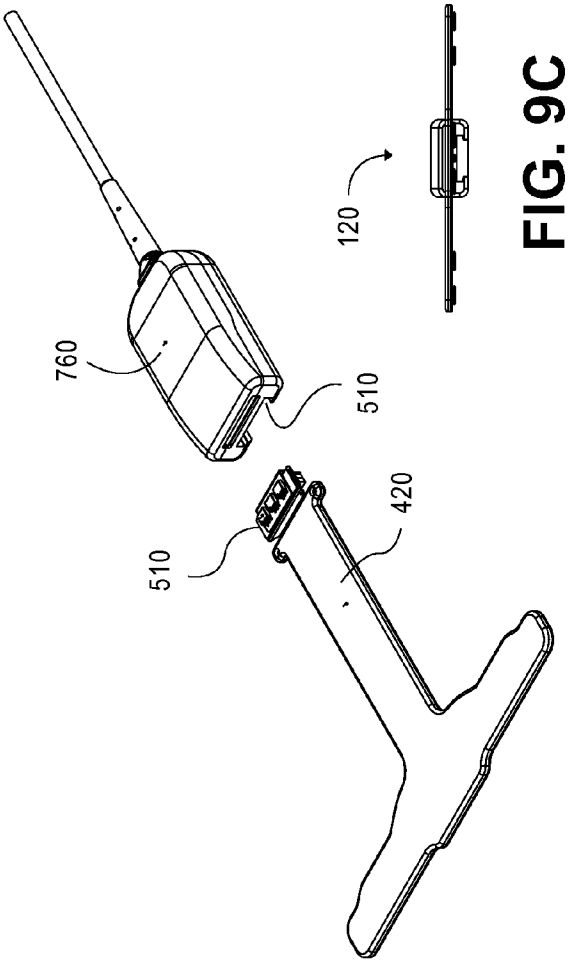

FIG. 9A

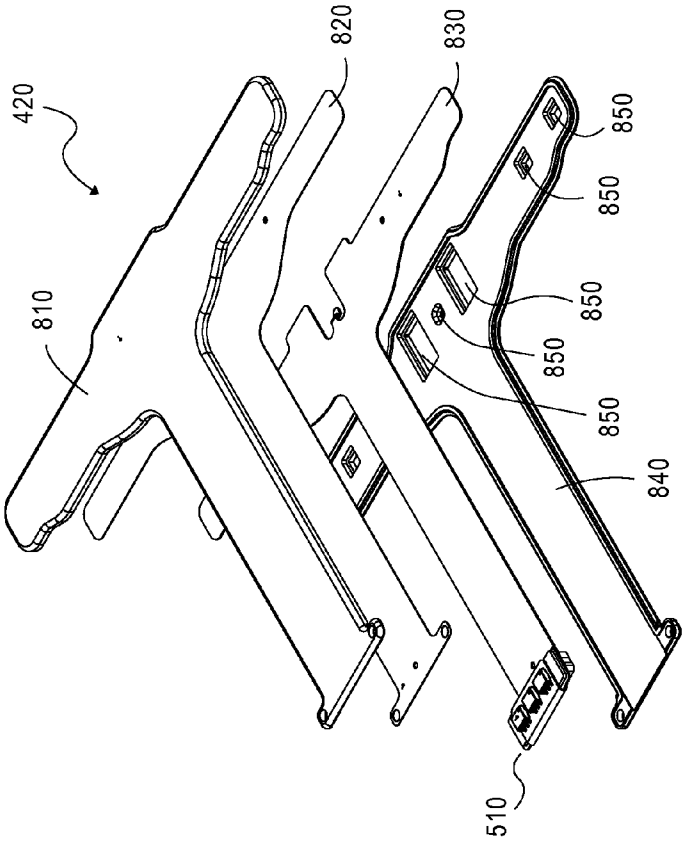

FIG. 10D

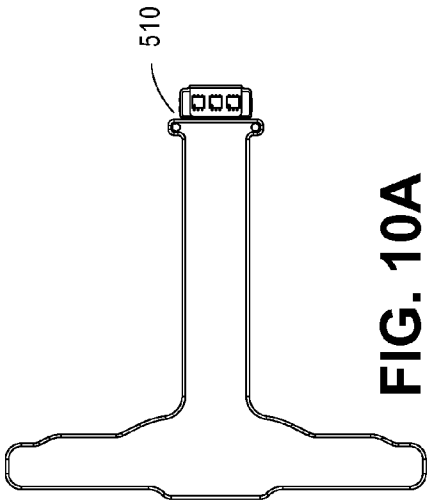

FIG. 10A

FIG. 10B

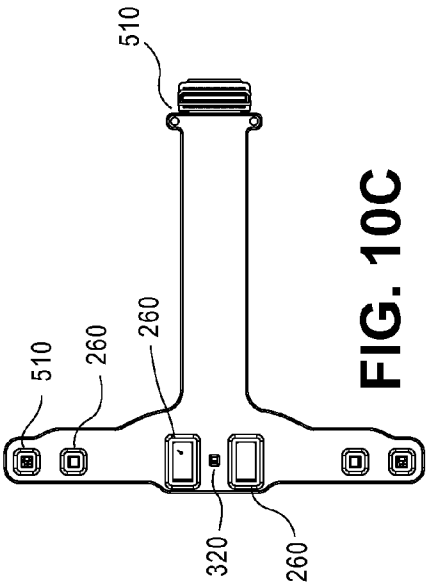

FIG. 10C

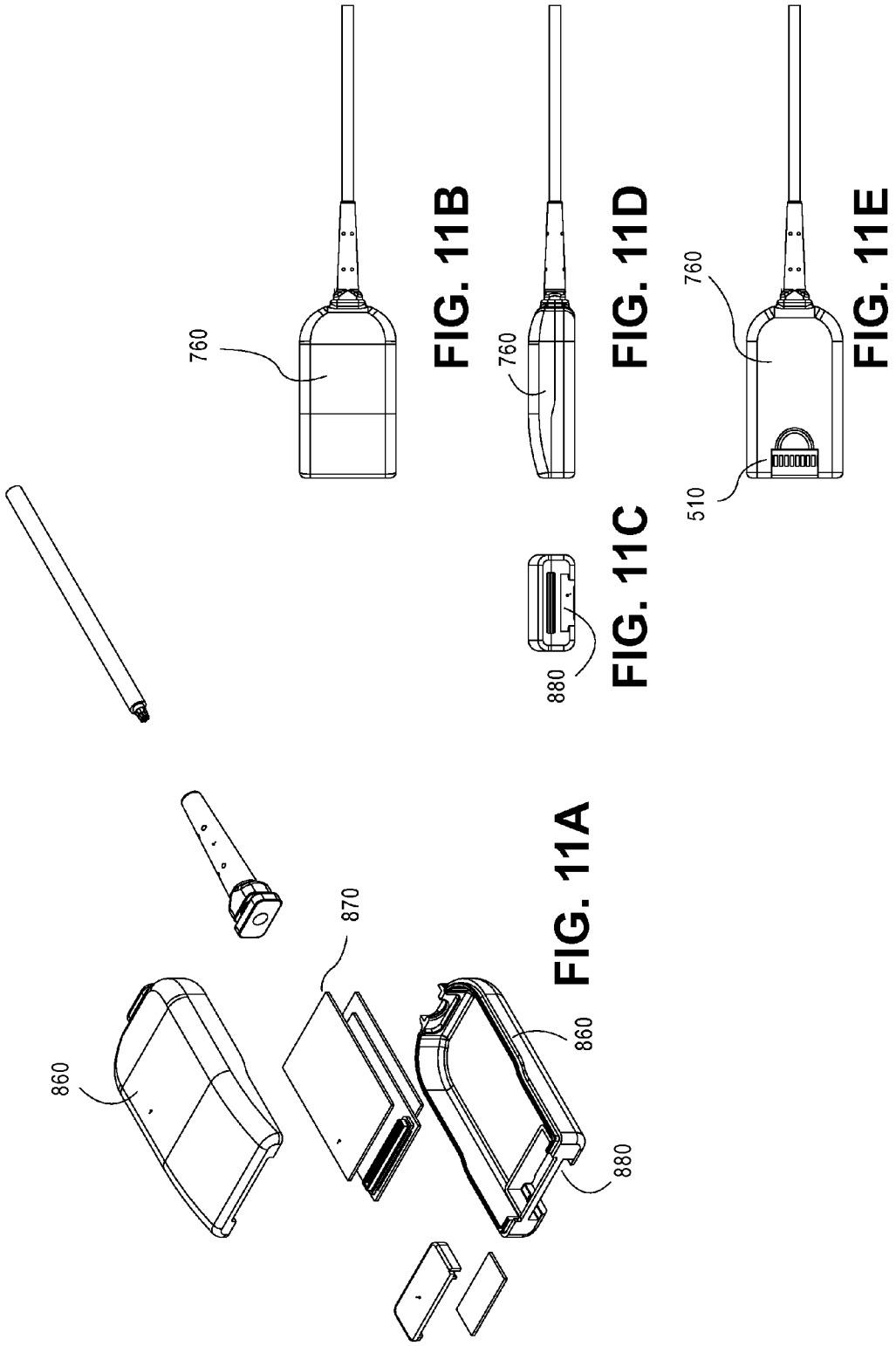

FIG. 11B

FIG. 11D

FIG. 11E

FIG. 11C

FIG. 11A

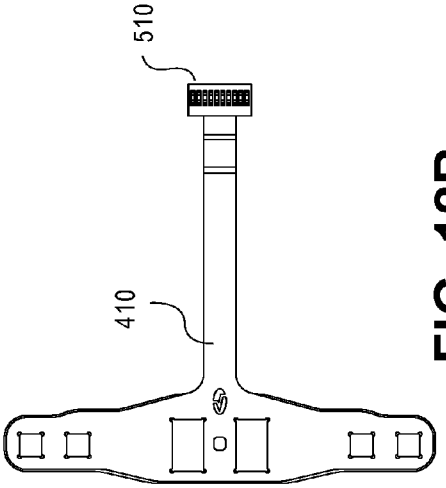

FIG. 12B

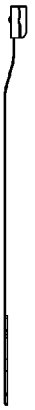

FIG. 12C

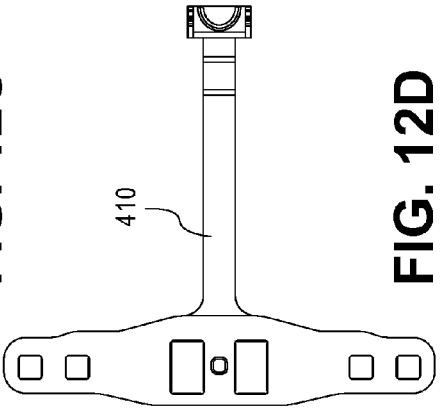

FIG. 12D

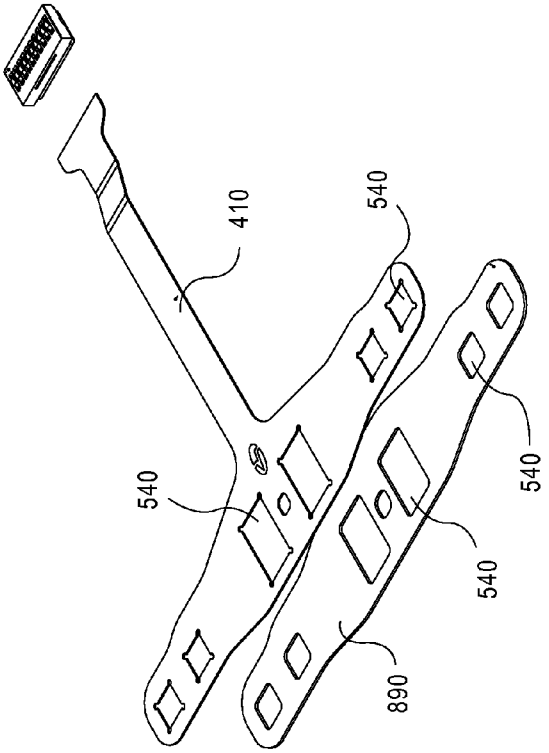

FIG. 12A

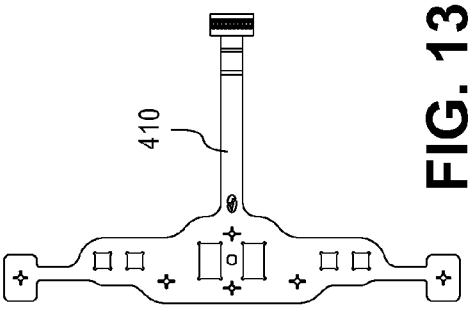

FIG. 13B

FIG. 13C

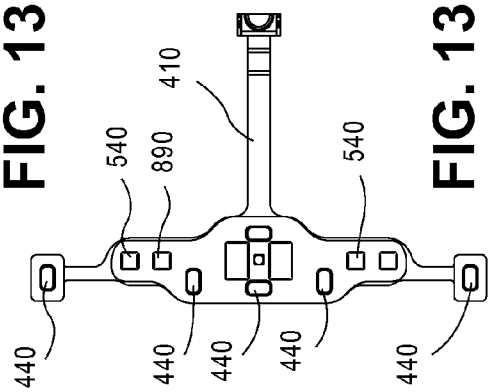

FIG. 13D

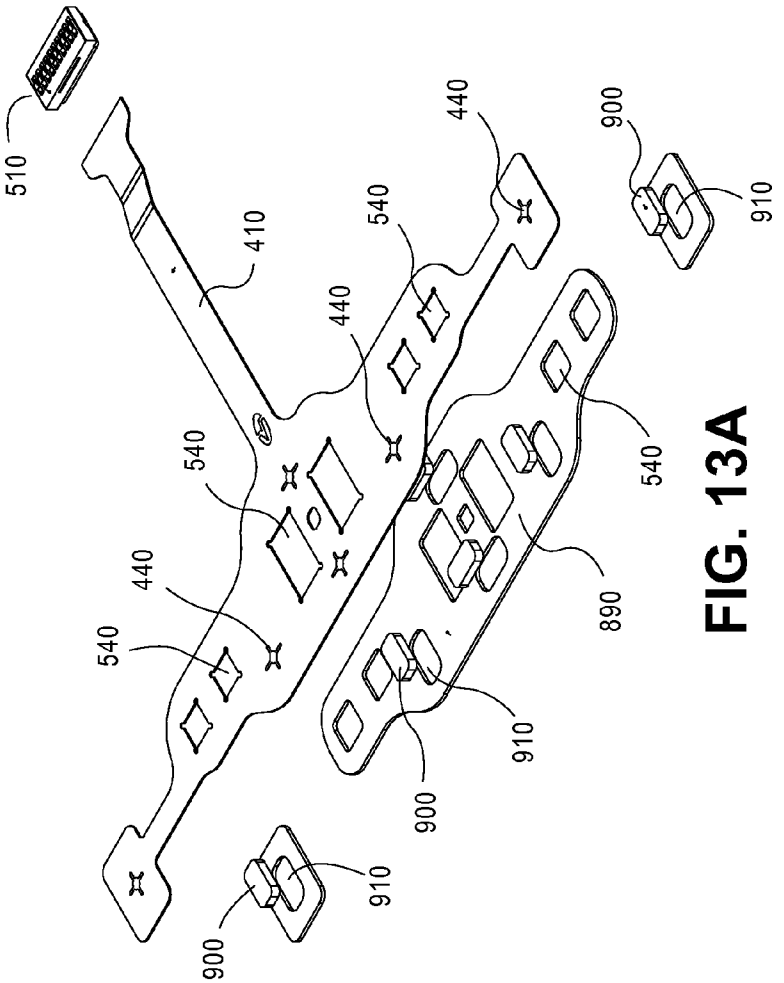

FIG. 13A

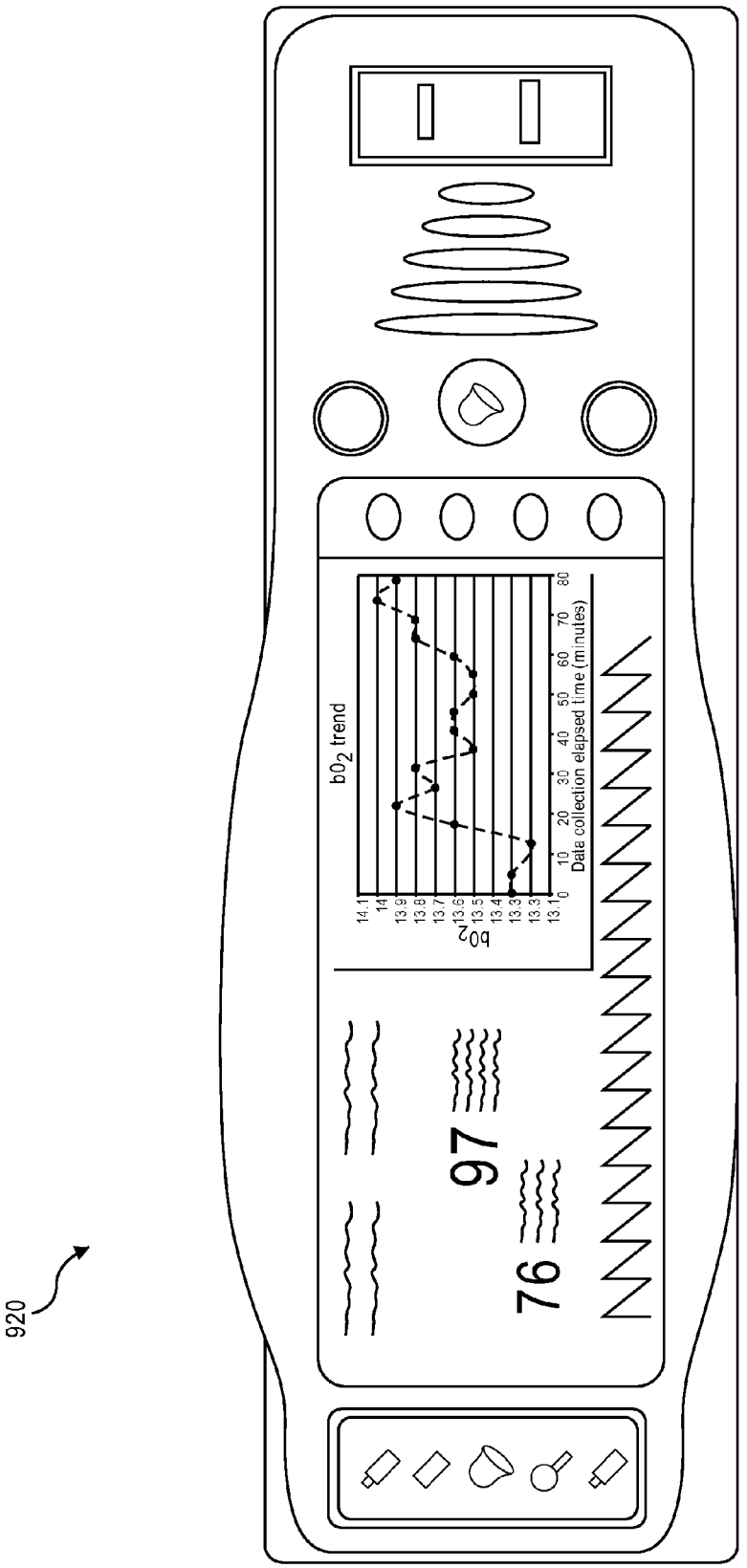
920
bO2 trend
bO2
14.1
14
13.9
13.8
13.7
13.6
13.5
13.4
13.3
13.2
13.1
0
10
20
30
40
50
60
70
80
Data collection elapsed time (minutes)
97
76

FIG. 14

DEPTH OF CONSCIOUSNESS MONITOR INCLUDING OXIMETER

PRIORITY CLAIM

This application claims the benefit of priority under 35 U.S.C. §119(e) of the following U.S. Provisional Patent Application No. 61/387,457, titled "Depth of Consciousness Monitor Including Oximeter," filed on Sep. 28, 2010, and incorporates that application by reference herein in its entirety.

REFERENCE TO RELATED APPLICATIONS

This application is related to U.S. Provisional Patent Application No. 61/387,426, titled "Magnetic Electrical Connector For Patient Monitors," filed on Sep. 28, 2010, and incorporates that application by reference herein in its entirety.

FIELD OF THE DISCLOSURE

The present disclosure relates to the field of oximetry. More specifically, the disclosure relates to oximetry technologies for depth of consciousness monitoring.

BACKGROUND OF THE DISCLOSURE

General anesthesia is often used to put patients to sleep and block pain and memory during medical or diagnostic procedures. While extremely useful to caregivers, general anesthesia is not risk free, and thus, caregivers seek to maintain a depth of consciousness consistent with the needs of a particular medical procedure. In short, there is a desire to avoid over and under dosing. However, as a patient's depth of consciousness may change from minute to minute, caregivers often employ a host of monitoring technologies to attempt to periodically, sporadically, or continually ascertain the wellness and consciousness of a patient. For example, caregivers may desire to monitor one or more of a patient's temperature, electroencephalogram or EEG, brain oxygen saturation, stimulus response, electromyography or EMG, respiration, body oxygen saturation or other blood analytes, pulse, hydration, blood pressure, perfusion, or other parameters or combinations of parameters. For many of the foregoing, monitoring technologies are individually readily available and widely used, such as, for example, pulse oximeters, vital signs monitors, and the like.

In their depth of consciousness monitoring, caregivers may also use recording devices to acquire EEG signals. For example, caregivers place electrodes on the skin of the forehead to detect electrical activity produced by the firing of neurons within the brain. From patterns in the electrical activity, caregivers attempt to determine, among other things, the state of consciousness of the brain. Caregivers may also use cerebral oximeters to determine the percentage of oxygenation of the hemoglobin in the cerebral cavity inside the skull. Cerebral oximetry is different from conventional pulse oximetry, which detects the oxygenation of blood in the body arteries. However, like pulse oximetry, caregivers place sensors on the body, in this case on the forehead, that emit radiation and detect the radiation after attenuation by body tissue. This attenuated signal includes information relating to the blood oxygenation of the brain. Directly measuring the blood oxygenation of the brain, or at least measuring physiological parameters indicative of the blood oxygenation of the brain, provides information about the state of brain function, such as, for example, brain oxygen consumption, not

available by measurement parameters that determine only the oxygenation of the blood feeding the brain or by monitoring the brain's electrical activity.

Today, there are several approaches to implementing a cerebral oximeter. One approach includes placing emitters on the forehead and spacing detectors on the forehead at different distances from the emitters. The emitters emit radiation at two or four different wavelengths and the detectors output signals representing the detected attenuated radiation. An instrument compares a DC signal from the different detectors and uses the difference as a basis for measurement. The underlying assumption appears to be that the closer detector provides an indication of oxygen saturation of the tissue outside the cerebral cavity, while the further detector provides an indication of the oxygen saturation of the tissue outside and inside the cerebral cavity. Subtraction of the two is hoped to provide an indication of just cerebral oxygenation. In any event, caregivers use a rising or falling trend in this difference to make deductions about the cerebral oxygen status in the patient. In some cases, instruments employing four wavelength systems also seek an output value of oxygenation, as opposed to just a trend of the difference signal. The foregoing approaches appear to be consistent with commercially available instruments from Somanetics Corporation of Troy, Mich. and CAS Medical Systems, Inc. of Branford Conn. A significant drawback to each of these approaches includes the cost of the instrumentation and sensors is often prohibitively high.

Another approach to a cerebral oximeter includes deep tissue imaging. For example, this type of research exposes high frequency light to the forehead and attempts to measure time of arrival and scattering/absorption coefficients. While primarily still in a research phase, it appears that the instrumentation could be less expensive than that disclosed above, perhaps even half the cost. However, even at that savings, this type of cerebral oximeter is still primarily in the research and development phase and still relatively costly. For example, the multiple optical benches provided in a single instrument generally associated with this type of design could cost more than three thousand dollars each.

Complicating the foregoing discussion is the realization that there is limited space on a patient's head for each of the different sensors. Particularly, where the forehead is the optimal measurement site in which to position EEG and brain oximetry sensors, drawbacks occur. For example, given the forehead's relatively small size, the forehead provides space for placement of a few sensors at the same time.

SUMMARY OF THE DISCLOSURE

Based on at least the foregoing, the present disclosure seeks to overcome some or all of the drawbacks discussed above and provide additional advantages over any prior technologies. The present disclosure describes embodiments of noninvasive methods, devices, and systems for monitoring depth of consciousness through brain electrical activity and the oxygenation of the brain. Additional embodiments include monitoring of heartbeat, arterial oxygenation, venous oxygenation, temperature, and other physiological patient characteristics. For example, the present disclosure includes a combination forehead sensor having EEG and brain oximetry components. In an embodiment, the EEG components include electrical leads and the brain oximetry components include a plurality of light sources and detectors. Moreover, in an embodiment the forehead sensor includes a multisite forehead sensor configured to be positioned above the eyebrows of a patient with connecting devices and cables traveling over

the head and conveniently away from the body. Such positioning provides an ergonomic sensor along with increased safety from potential inadvertent interference by the patient or caregiver.

In an embodiment, a light source system of the sensor includes low cost optical benches having self contained internal emission detectors, light integrators or prisms, mirrors and the like. For example, in an embodiment, a light source includes a cap configured to reflect light toward a splitting mirror focusing light to both an internal emission detector for evaluation of the intensity of the emitted light and an aperture for directing the light into the patient's tissue. The light source may also include opaque or other surfaces or walls configured to appropriately direct emitted light.

Further embodiments may transform a commercially available pulse oximeter into a brain oximetry unit. For example, a processing device may advantageously connect to a sensor or other data input connection of a pulse oximeter to, for example, acquire power and open communication between the devices. In an embodiment, the sensor would include components for measuring the attenuation thereof. In an embodiment, the sensor would output a signal that represents the attenuated light. This signal would be similar to the output of a conventional pulse oximeter sensor in that both attempt to be indicative of light attenuation.

The signal could then be transmitted to the pulse oximeter for processing, conditioning and displaying of the brain oxygenation on a monitor of the pulse oximeter. A conventional pulse oximeter would be readily adaptable to process and display information from a brain oximeter sensor because the signals output by sensors of both devices are similar in nature (as both are output from photodiode light detectors detecting light attenuated by tissue). Modifications to the oximeter may advantageously include the algorithms used to analyze the signal from the sensors as cerebral oximeters may advantageously use different wavelengths, frequencies, and different comparing and analysis techniques to determine oxygenation. However, one of ordinary skill will recognize from the disclosure herein that algorithm changes often are much more straightforward and price competitive than significant hardware changes. This is especially the case when updating an already-installed base of monitors.

In another embodiment, a forehead sensor for monitoring the depth of consciousness of a patient is disclosed comprising a brain oxygenation sensor that includes at least one light source and two detectors, an eeg sensor that includes electrical leads that make contact with the skin of the patient's forehead, a reusable portion that houses the light source and detectors of the brain oxygenation sensor and a disposable portion that houses a plurality of EEG electrodes and is removably connectable to the reusable portion. The connector of the forehead sensor may also connect to the disposable portion and the reusable portion and house the majority of the curicutiry and processing components for the EEG sensor and the brain oxygenation sensor. In embodiment, an interface between the connector and the disposable portion may allow the disposable portion to be removably attached to the connector. The light source or detector may also have a lip around their edge. In an embodiment, the reusable portion is directly connected to the disposable portion.

In an embodiment, a system for monitoring the depth of consciousness of a patient is disclosed comprising a forehead sensor that includes a brain oxygenation sensor and a conventional pulse oximeter loaded with software for displaying data related to the blood oxygenation level of the brain cavity data processed by the forehead sensor. In an embodiment, the conventional pulse oximeter may provide power to the sensor and be capable of communicating data with the sensor or provide the drive signal and process the signal from the detector of the brain oxygenation sensor. The forehead sensor may also contain all of the components for processing the sign from detectors of the brain oxygenation sensor.

In another embodiment, a light source for a brain oxygenation sensor is disclosed comprising a substrate, emitters attached to the substrate for emitting light with at least two different wavelengths, a detector for detecting emitted light before it is attenuated by tissue, a cap connected to the substrate, and an aperture for the emitted light to exit the light source and enter the tissue site. The emitters may be LED's. In an embodiment a light diffusing material may be placed between the emitters and tissue site to scatter light. The light diffusing material may also be between the emitters and the detector and be made from a glass or epoxy that fills in around the emitters and detector. In an embodiment, the cap may be reflective or non-reflective. In another embodiment, a splitting mirror may direct light either to the detector or the aperture. In a further embodiment, a temperature sensor may be connected to the substrate.

For purposes of summarizing the disclosure, certain aspects, advantages and novel features of the disclosure have been described herein. Of course, it is to be understood that not necessarily all such aspects, advantages or features will be embodied in any particular embodiment of the disclosure.

BRIEF DESCRIPTION OF THE DRAWINGS

The following drawings and the associated descriptions are provided to illustrate embodiments of the present disclosure and do not limit the scope of the claims.

FIG. **1**A illustrates an embodiment of a forehead sensor communicating with a brain oximetry unit, which in turn communicates with a pulse oximeter now configured to monitor a state of consciousness through brain oxygenation.

FIG. **1**B illustrates an embodiment of the forehead sensor of FIG. **1**A including an ear pulse oximetry sensor.

FIG. **2**A-**2**B illustrate block diagrams of embodiments of the brain oximetry unit of FIG. **1**A.

FIGS. **3**A-**3**O illustrate various embodiments of the forehead sensor of FIG. **1**A.

FIGS. **3**A, **3**N, and **3**O illustrate embodiments of the forehead a sensor including reusable and disposable portions mated together.

FIGS. **3**B-**3**C illustrate embodiments of the reusable portion including various cerebral oximetry sensor components.

FIGS. **3**D-**3**M illustrate embodiments of the disposable portion including EEG, temperature and other parameter measuring components.

FIGS. **4**A-**4**O illustrate various embodiments and views of light sources of the forehead sensor of FIG. **1**A.

FIG. **4**A-D illustrate perspective and side views of a light source of the cerebral oximeter according to embodiments of the present disclosure.

FIG. **4**E illustrates a perspective view of the light source including light paths of a multi-faceted directing mirror according to an embodiment of the present disclosure.

FIG. **4**F-G illustrate more perspective views of the light source.

FIG. **4**H illustrates a further perspective view of the light source without a cap according to an embodiment of the present disclosure.

FIG. **4**I illustrates a bottom view of the light source towards the top reflective covering according to an embodiment of the present disclosure.

FIG. **4**J illustrates a perspective view of the light source with the reflective cover being composed of many portions according to an embodiment of the present disclosure.

FIGS. **4**K-**4**M illustrate side views of the light source including a semi-reflectant mirror according to an embodiment of the present disclosure.

FIG. **4**N illustrates a side view of the light source including a light diffusing material filling inside a cap according to an embodiment of the present disclosure.

FIG. **4**O illustrates a side view of the light source with an angled substrate according to an embodiment of the present disclosure.

FIG. **4**P illustrates a side view of the light source with a relatively flat cap.

FIG. **5** illustrates an exemplary graph showing the calibrated relationship of the emission detector output to the calibrated intensity of the emitter output according to an embodiment of the present disclosure.

FIG. **6** illustrates an embodiment of a forehead sensor communicating with a brain oximetry unit contained inside a connector, which in turn communicates with a pulse oximeter configured to monitor and/or display a state of consciousness through brain oxygenation.

FIGS. **7**A-**7**E illustrate various embodiments and views of the forehead sensor of FIG. **6**.

FIG. **7**A illustrates a perspective view of the sensor and connector with the disposable portion of the forehead sensor detached from the connector.

FIG. **7**B illustrates a top view of the forehead sensor with the disposable and reusable portion of the sensor connected.

FIG. **7**C illustrates a side view of the forehead sensor with both the disposable and reusable portion of the sensor connected.

FIG. **7**D illustrates a front view of the forehead sensor with both the disposable and reusable portion of the sensor connected.

FIG. **7**E illustrates a bottom view of the forehead sensor with the disposable and reusable portion connected.

FIGS. **8**A-**8**D illustrate various embodiments and views of the forehead sensor that include an EEG sensor.

FIG. **8**A illustrates a perspective view of the sensor and connector with the disposable portion of the forehead sensor detached from the connector.

FIG. **8**B illustrates a top view of the forehead sensor with the disposable and reusable portion of the sensor connected.

FIG. **8**C illustrates a side view of the forehead sensor with both the disposable and reusable portion of the sensor connected.

FIG. **8**D illustrates a bottom view of the forehead sensor with the disposable and reusable portion connected.

FIGS. **9**A-**9**E illustrate various embodiments and views of the reusable portion of the forehead sensor.

FIG. **9**A illustrates a perspective view of the reusable portion and connector of the forehead sensor with the reusable portion detached from the connector.

FIG. **9**B illustrates a top view of the reusable portion of the forehead sensor.

FIG. **9**C illustrates a side view reusable portion of the forehead sensor.

FIG. **9**D illustrates a front view of the reusable portion of the forehead sensor.

FIG. **9**E illustrates a bottom view of the reusable portion of the forehead sensor.

FIGS. **10**A-**10**D illustrate various embodiments and views of the reusable portion of the forehead sensor.

FIG. **10**A illustrates a top view of the reusable portion of the forehead sensor.

FIG. **10**B illustrates a side view reusable portion of the forehead sensor.

FIG. **10**C illustrates a bottom view of the reusable portion of the forehead sensor.

FIG. **10**D illustrates an exploded perspective view showing an embodiment of the various layers of the reusable portion of the forehead sensor.

FIGS. **11**A-**11**E illustrate various embodiments and views of the connector of the forehead sensor.

FIG. **11**A illustrates an exploded perspective view of the various components of the connector.

FIG. **11**B illustrates a top view of the connector.

FIG. **11**C illustrates a front view of the connector.

FIG. **11**D illustrates a side view of the connector.

FIG. **11**E illustrates a bottom view of the connector.

FIGS. **12**A-**12**D illustrate various embodiments and views of the disposable portion of the forehead sensor.

FIG. **12**A illustrates a perspective view of the disposable portion of the forehead sensor with a detached adhesive layer.

FIG. **12**B illustrates a top view of the disposable portion of the forehead sensor.

FIG. **12**C illustrates a side view of the disposable portion of the forehead sensor.

FIG. **12**D illustrates a bottom view of the disposable portion of the forehead sensor that includes an attached adhesive layer.

FIGS. **13**A-**13**D illustrate various embodiments and views of the disposable portion of the forehead sensor that include an EEG sensor.

FIG. **13**A illustrates an exploded perspective view of the disposable portion of the forehead sensor with a detached adhesive layer.

FIG. **13**B illustrates a top view of the disposable portion of the forehead sensor.

FIG. **13**C illustrates a side view of the disposable portion of the forehead sensor.

FIG. **13**D illustrates a bottom view of the disposable portion of the forehead sensor that includes an attached adhesive layer.

FIG. **14** illustrates an embodiment of an exemplary display showing potential brain oximetry parameters that could be displayed in an embodiment of the brain oximetry sensor.

DETAILED DESCRIPTION

The present disclosure generally relates to patient monitoring devices. In order to provide a complete and accurate assessment of the state of a patient's various physiological systems, in an embodiment, a sensor may advantageously monitor one, multiple or combinations of EEG, cerebral oximetry, temperature, pulse oximetry, and other physiological parameters. In various embodiments, the sensor includes a disposable portion and reusable portion. For example, the disposable portion may advantageously include components near a measurement site surface (the patient's skin), including, for example, an EEG, a temperature sensor, tape, adhesive elements, positioning elements, or the like. On the other hand, the reusable portion may advantageously include more expensive or other components, circuitry or electronics, which, in some embodiments include for example time-of-use restrictions for quality control or the like. The reusable portion, can be used multiple times for a single patient, across different patients, or the like, often depending upon the effectiveness of sterilization procedures. The reusable components may include, for example, cerebral oximetry components, pulse oximetry components and other components to measure other various parameters.

In an embodiment, the disposable portion of the sensor may include an inductance connection or other electrical connection to the reusable portion of the sensor, and the signal from both sensors could thereby be transmitted through a common cable to a brain oximetry unit. In an embodiment, the brain oximetry unit may include an analog to digital converter, various electrical filters, and a microcontroller for processing and controlling the various sensor components.

In an embodiment, a brain oximetery unit or additional signal processing unit could communicate with the forehead sensor disclosed herein and one or more host display and patient monitoring stations. In an embodiment, the patient monitoring station may be a pulse oximeter. In an embodiment, the pulse oximeter may perform integrated display, data monitoring and processing of patient parameters including a connection for power and data communication. In an embodiment, some or all communication may be through wired, wireless, or other electrical connections. In an embodiment, the brain oximetry unit may advantageously be housed in a portable housing. In such embodiments, the unit may advantageously be physically associated with a monitored patient, such as, for example, attached in an arm band, a patient bed pouch, a hood or hat, a pocket of a shirt, gown, or other clothing, or the like. In other embodiments, the unit may be entirely or partially housed in a cable connector. In an embodiment, the signal processing and condition unit could also monitor patient parameters through other sensors including, for example, ECG, Sp02 from the earlobe, finger, forehead or other locations, blood pressure, respiration through acoustic or other monitoring technologies, or other clinically relevant physiological parameters.

In an embodiment, the pulse oximeter communicates with a sensor, such as a forehead sensor including one or more light sources configured to emit light at a patient's forehead. In an embodiment, the light source may include one or more emitters or emitter systems, such emitters or emitter systems may be embedded into a substrate. In various embodiments, the emitters could be either light emitting diodes ("LEDs"), lasers, superluminescent LEDs or some other light emitting components. These components could be arranged in any pattern on the substrate and could be either a single light emitting source or several light emitting sources. In an embodiment, the emitting components could emit light that deflects off of reflective surfaces associated with a cap of the substrate. The reflective cover could be any number of shapes or sizes and could be constructed to direct light to specific points or a point on the cap or substrate.

In an embodiment, a multi-faceted splitting mirror could reflect light to an opening in the substrate that would allow the light to escape and be emitted to an emission detector in an embodiment also housed in the light source substrate. The emission detector may advantageously sample the light providing feedback usable to create an optical bench or at least optical bench properties of the light source, including, for example, determinations of intensity, wavelength, or the like. In an embodiment, the light source may include a polarized filter for adjusting the emitter light, in some embodiments before exiting an opening in the emitter or being detected by the emission detector.

In an embodiment, a caregiver could analyze physiological information collected from the various sensors including a patient's temperature, EEG, brain oxygen saturation, stimulus response, electromyography or EMG, respiration monitor using acoustic sensor applied to the through, body oxygen saturation, glucose concentration, or other blood analytes, pulse, hydration, blood pressure, perfusion, or other parameters or combinations of parameters to determine relevant information about the state of a patient's well being. In another embodiment, a caregiver may advantageously analyze information collected from the various sensors to more completely assess the overall depth of a patient's sedation and obtain an assessment superior to an assessment derived from monitoring a single or a few of the parameters mentioned above.

Reference will now be made to the. Figures to discuss embodiments of the present disclosure.

FIG. **1**A and **1**B illustrate examples of a patient monitoring system **100**. In certain embodiments, the patient monitoring system **100** measures several physiological parameters including cerebral electrical activity, temperature, cerebral oxygenation, including venous and arterial oxygenation, arterial oxygenation at various other points on the body, various other blood analytes including total hemoglobin, glucose, lipids, stimulus response, electromyography or EMG, respiration, pulse, hydration, blood pressure, perfusion, or other parameters or combination of other physiologically relevant patient characteristics. The information from these physiological parameters can be evaluated using trend analysis, absolute and relative measures of certain parameters, combined or alone to evaluate the total wellness and current state of a patient at any point in time.

The patient monitoring system can include multiple or a single sensor **120**, a brain oximetry unit **140**, and a pulse oximeter **150**. The sensor **120** can be any variety of shapes and sizes, and could be applied to a variety of measurement sites on a patient's skin including any location on the forehead and temples or other location of the head. Also, electrodes designed to be placed at a measurement site covered with a patient's hair may advantageously be implemented in order to apply the sensor to any part of a patient's head that is covered with hair. A caregiver or patient may fasten the sensor to the patient's head with a variety of mechanism including adhesive, straps, caps, combinations of the same, or other devices for fastening sensors to a patient's body or skin known in the art.

In an embodiment, the patient monitoring system **100** advantageously utilizes wireless communication to provide a portable unit to accommodate an ambulatory patient, or other patient in transit. For example, in one embodiment, the brain oximetry unit **140** may be attached to an arm band or included in an arm band or other device that is wearable by the patient, including in a cap, a hood, a sling or a pocket of a garment. In an embodiment, the sensor would communicate with the arm band brain oximetry unit **140** with a hard wired connection or a wireless connection for convenience and flexibility of the patient obtained by eliminating excess wires.

In an embodiment, the portable brain oximetry unit **140**, such as an armband brain oximetry unit **140**, could also communicate wirelessly with the pulse oximeter **150**. This would allow the brain oximetry unit **140** to be transported between various caregiving facilities, each with their own stationary pulse oximeters **150** without unhooking and reinserting hard-wired electrical connections. Instead, a brain oximetry unit **140** could establish a wireless communication link with a stationary pulse oximeter **150** as the brain oximetry unit **140** is brought into proximity of the pulse oximeter **150**. In an embodiment, the devices could establish the connection automatically and patient data may be automatically sent from the brain oximetry unit **140** to the pulse oximeter **150** or the connection may require input from a caregiver in the user interface of either of the devices. This will advantageously facilitate portability and seamless monitoring of a patient while being transported, for example, from an ambulance to a hospital room or from room to room in a hospital.

In an embodiment, the pulse oximeter **150** may be a multi-parameter patient monitoring station or other host device capable of monitoring a wide variety of vital signs and blood constituents and other parameters or combinations of parameters such as those monitors commercially available from Masimo Corporation of Irvine, Calif., and disclosed herein with reference to U.S. Pat. Nos. 6,584,336, 6,661,161, 6,850,788, and 7,415,297, among others assigned to Masimo Corporation, and U.S. Patent Publication No. 2006/0211924, 2010/0030040, among others assigned to Masimo Corporation or Masimo Laboratories, Inc. of Irvine Calif.

FIG. **1**B illustrates an embodiment of the patient monitoring system **100** with a pulse oximeter **150** attached to a sensor **120** or through some physical electrical conduction connection, wireless, or other suitable electrical connection to the pulse oximeter **150**. This will advantageously provide additional information about the state of the arterial oxygenation of the blood being transported to the head. In an embodiment, the pulse oximeter **150** branches off the wiring from the sensor **120**.

In an embodiment, a caregiver or the patient may attach the brain oximetry unit **140** directly to the patient's arm or other part or clothing of the patient through an armband with straps or some other means known in the art to connect a portable monitoring unit to a patient. In an embodiment, a brain oximetry unit **140** may be integrated into a hat or other headgear wearable by the patient or some other structure near the patient. In an embodiment, brain oximetry unit **140** can rest on a table or other surface near the patient.

In some embodiments, a brain oximetry unit **140** can be integrated with the pulse oximeter **150**. Alternatively, the brain oximetry unit **140** could be a module that is docked or somehow associated with a multi-parameter patient monitoring station.

FIG. **2**A and **2**B show block diagrams of various embodiments of the brain oximetry unit **140**, sensors **120**, and pulse oximeter **150**. In an embodiment, the brain oximetry unit **140** may utilize a processor **220** which may be a micro-controller or other processor, which may control or coordinate some or all of the functions of the various emitters **230** and detectors **260** and other sensors **120** and in an embodiment, may coordinate, process or condition, or manipulate the electronic data in some other manner, before communicating the data to the pulse oximeter **150**. Also, the processor **220** may receive instructions or data control messages from the pulse oximeter **150** to provide the appropriate conditioning and controlling of the various front end components of the various sensors **120** associated the pulse oximeter **150**. In an embodiment, data transmitted between the brain oximetry unit **140**, the pulse oximeter **150**, the sensors **120** and any other associated components of a patient monitoring system **100** may be communicated by the devices using electrical wires, wireless communication, optical communication, RFID, LAN networks, or other electronic devices for communicating data known in the art.

The brain oximetry unit **140** may also include various front end components for the various sensors **120** that may be associated with the brain oximetry unit **140**. In an embodiment, front end components may translate and transmit instructions and control signals for driving the various sensors. In an embodiment, the front end components may translate, process, or transmit instructions and control signals to the emitting or light producing components of the sensor. The front end components may also receive and transmit data acquired by the detectors of the sensors to the microcontroller **220** or other processor **220**.

These front end components could include front end components for a variety of sensors **120** including for sensors that detect blood oxygenation, EEG, ECG, temperature, acoustic respiration monitoring ("ARM") sensors, such as those available from Masimo Corporation of Irvine, Calif., acoustic throat respiratory sensor, and brain oxygenation. In an embodiment, a caregiver could advantageously utilize a device with the ability to monitor the plurality of above mentioned parameters to more accurately determine a depth of a patient's sedation. In an embodiment, a front end component that would be associated with a sensor **120** that detects brain oxygenation may have a sub component dedicated to driving emitters **230** associated with a light source of the brain oxygenation sensor and a sub-component associated with the detector **230** or detectors **230** of the brain oxygenation sensor **300** for receiving and transmitting the detected signals that pass through various body tissues.

In an embodiment, one of the various sensors associated with the front end components of the brain oximetry unit could be, for example, a blood oxygenation sensor **310** which may be placed at various measurement sites on a patient's skin, including the earlobe, finger, forehead or other places known in the art suitable for detecting blood oxygenation. Many suitable pulse oximeter sensors **310** are known in the art such as those blood oxygenation sensors **310** commercially available from Masimo Corporation of Irvine, Calif., and disclosed herein with reference to U.S. Pat. Nos. 5,638,818, 6,285,896, 6,377,829, 6,580,086, 6,985,764, 7,341,559, or others.

In an embodiment, another sensor **120** that may be associated with a front end component of the brain oximetry unit **140** could be a temperature sensor **320**. The temperature sensor **320** could detect the temperature of the skin, the temperature inside the ear, the temperature under the tongue, or any other temperature measurement method known in the art. In an embodiment, the temperature sensor **320** could be any suitable thermistor, or any other temperature sensor **320** known in the art capable of detecting a surface temperature of a patient's skin. Additional temperature sensor may advantageously provide feedback to the unit **140** regarding the performance or temperature of one, combinations of, or all of the emitters **230**.

An EEG sensor **330** may also be associated with the front end components of the cerebral oximeter **140**. In an embodiment, the EEG sensor **330** may be any of a variety of EEG sensors **330** known in the art. An EEG sensor **330** could be applied to a patient at any of a multitude of locations and measurement sites on the skin of the head of a patient. In an embodiment, the EEG sensor **330** may include electrode leads that may be placed on a measurement site in contact with the skin of the patient. In an embodiment, the EEG **330** may monitor the electrical activity of a patient's brain through any number of electrodes, electrode leads, and channels or other systems known in the art.

In an embodiment, the EEG sensor **330** may monitor and collect data from a patient's brain using 4 channels and 6 electrodes. In another embodiment, the EEG **330** may use 3 channels and 5 electrodes. In another embodiment, any variety or combination of sensors maybe be used that are suitable for obtaining an EEG signal, for example, such a system is disclosed in U.S. Pat. Nos. 6,016,4444, 6,654,626, 6,128,521, or the like.

A brain oxygenation sensor **300** may also be associated with the front end components of the brain oximetry unit **140**. In an embodiment, the brain oxygenation sensor **300** includes a light source **230**, and a detector **260**. The light source **230** of the brain oxygenation sensor **300** includes emitter(s) that

would emit light, sonic or other radiation into the forehead at one, two or other plurality of measurement sites located on the skin of the patient at a plurality of predetermined wavelengths. In an embodiment, the brain oxygenation sensor **300** would include a detector **260** with photodiodes or other radiation detection devices to detect the radiation emitting from the patient at a one or two or a plurality of measurement sites on the skin of the head of a patient. Many suitable brain oxygenation sensors **300** and cerebral oximeters are known in the art including those disclosed in U.S. Pat. Nos. 7,072,701, 7,047,054, or similar sensors.

In an embodiment, the light source **230** of the brain oxygenation sensor **300** may include an emission detector **260**. In an embodiment, the emission detector **260** would detect the light emitted from the light source **230** before passing through or contacting the measurement site of the patient. In an embodiment, an output from the emission detector **230** would be communicated to the micro-controller **220** in the brain oximetry unit **140**, the processing unit in the cerebral oximeter **140** or, some other processing component associated with the patient monitoring system **100** in order to calculate an approximate output intensity of the light emitted by the emitter(s) **230**. The micro-controller **220** or other processor **220** could calculate the output intensity based on the output of the emission detector **260** by comparing the data to calibration data. In an embodiment, the calibration data could include measurement of intensity of light emitted from the emitter(s) **230** and corresponding measurements of output from the emission detector **260**. This data could then be correlated to real time output from the emission detector **260** while the oxygenation sensor **230** is in use to determine an actual or approximate intensity of light or radiation being emitted by the emitter(s) **230** utilizing a calibration curve or other suitable calculation or processing method. In an embodiment, the calibration data may be stored in an EPROM or other memory module in the brain oximetry unit **140**, the pulse oximeter **150**, or other patient processing module associated with the patient monitoring system **100**.

In an embodiment, the detector **260** will detect light or other radiation emitted from the light source **230** after, in an embodiment, some of the light has entered the measurement site on the patient and has been attenuated by a patient's tissue. In an embodiment, the detector **260** could be any number of detectors known in the art for detecting light or other radiation including photodiodes or other types of light or radiation detectors. In one embodiment, the detector **260** may convert detected light or other radiation into a signal, for example, an electrical output signal, which may represent the intensity or other attributes of the radiation. In an embodiment, the signal from the detector **260** may be sent to a brain oxygenation detector **260** front end located in the brain oximetry unit **140** for processing, conditioning or transmitting to the pulse oximeter **150** or other patient monitoring processor. In one embodiment, the signal may be converted into a digital format by an analog to digital converted located in either the brain oximetry unit **140** or the pulse oximeter **150**. In an embodiment, the data from the detector **260** of the brain oxygenation sensor **300** may be processed to determine the cerebral oxygenation of a patient's brain tissue. In an embodiment, the processing of the data may include determining the changes of intensity between various wavelengths of emitted and detected light of the cerebral oxygenation sensor **300**.

In an embodiment, the cerebral oximeter **150** or multiparameter patient monitor acquires data from the brain oximetry unit **140** or sensor **120** derived from physiologically relevant parameters. In an embodiment, the pulse oximeter **150** could give visual quantitative or qualitative assessments of the patient's well being based on one or more of the various parameters or physiological attributes measured.

In an embodiment, a caregiver may utilize various physiological parameters to make a quantitative assessment of the patient's depth of sedation as indicated by an index based on for example, a patient's temperature, electroencephalogram or EEG, brain oxygen saturation, stimulus response, electromyography or EMG, respiration based on acoustic through sensors, body oxygen saturation or other blood analytes, pulse, hydration, blood pressure, perfusion, or other parameters or combinations of parameters. In another embodiment, various aspects of sedation could be assessed quantitatively or qualitatively based on a visual representation of the patient's sedation in the aspects including hypnosis, responsiveness, muscle relaxation or other clinically relevant facets of depth of anesthesia.

In an embodiment, the pulse oximeter **150** may supply power to brain oximetry unit **140** over a single line and data would be transferred back and forth between the brain oximetry unit **140** and pulse oximeter **150** over a separate line or lines. In another embodiment, both power and data could be transmitted over the same line or the same wire with multiple lines in the wire. In another embodiment, data and power could be transmitted wirelessly or through an inductance connection between the patient monitoring station and the signal processing unit or any other suitable connections or transmission techniques known in the art. Induction or magnetic connections are also disclosed in U.S. patent application Ser. No. 13/246,768, titled "Magnetic Electrical Connector for Patient Monitors," filed herewith on Sep. 27, 2011.

In an embodiment, the functionality of the brain oximetry unit **140** could be optionally controlled by the pulse oximeter **150**. In an embodiment, the data and qualitative and quantitative assessments of a patient's wellness being could be displayed on either or both the brain oximetry unit **140** and pulse oximeter **150**. Also, audible alarms and other indicators could be displayed on either or both the brain oximetry unit **140** and pulse oximeter **150** in response to various threshold breaches based on the assessment of the patient's wellness determined from the various monitored parameters.

FIGS. **3A-3F** illustrate several embodiments of the sensor **120**. FIG. **3A** shows an embodiment of the sensor **120** wherein disposable **410** and reusable portions **420** of the sensor **120** are connected and overlayed on top of one another. FIG. **3A** shows six EEG electrodes **440** with two reference electrodes and four active channel electrodes. FIG. **3A** also shows the light source **230** and detector **260** components of the brain oxygenation sensor **300**. Any number of suitable light sources **230** and detectors **260** may be incorporated into the forehead sensor **120**. All or some of the above mentioned sensor components including the EEG leads **440** and the brain oxygenation emitter **230** and detector **260** components may be linked to a single chip for transmission of acquired signals and drive signals or each component may be linked to its own individual chip through wires, or printed circuits, or other suitable electrical connections.

In one embodiment, the light source **230** may include one or more emitters. In one embodiment, the emitter could be a laser, or any suitable apparatus for emitting near-infrared or other spectrum of light including LEDS, super luminescent LEDs, or some other light emitting components. In one embodiment, the light source **230** may be incorporated with the brain oximetry unit **140** and the light or other radiation could be emitted from the light source **230** onto a fiber optic cable which would transmit the light from the light source **230** to the measurement site. In another embodiment, the emitter (s), including, for example, a laser or LED emitter(s), is

embedded in the emitter **230** directly in the forehead sensor. Other fiber optics may be used after emission of the light from the light source to equalize the intensity and distribution of the radiation over a cross sectional area of a beam of emitted light after it exits the emitter and before it enters the measurement site of the patient.

The detector **260** of the brain oxygenation sensor **300** may be any suitable device for detecting radiation including any combination of various photodiodes including InGas and Si photodiodes. In an embodiment, the detector **260** is a photodiode connected directly to the forehead sensor **120**. In another embodiment, the forehead sensor **120** collects light that has passed through patient tissue with a fiber optic cable or other similar apparatus that is positioned at an appropriate measurement site, for example on the patient's forehead. In an embodiment, the fiber optic cable could then transmit the collected light to the detector **260** of the brain oxygenation sensor **300**.

The EEG electrodes **440** may be any suitable electrodes for detecting the electro-potentials on the surface of the skin of a patient's head. In one embodiment, EEG electrodes **440** comprise a metal or other suitable conductor and utilize leads contacting the surface of the skin. In another embodiment, the electrodes **440** are gelled electrodes that make contact through the skin via gel and have metal leads that come into contact with the gel. In still yet another embodiment, the EEG electrodes **440** may be glued to the forehead with any suitable patient dermal adhesive for connecting the EEG electrodes **440** and may have electrical conductivity. In an embodiment, potentials from the EEG electrodes **440** are transmitted to the brain oximetry unit **140** for further conditioning, transmitting or processing.

FIGS. **3**B and **3**C show embodiments of a reusable portion **420** of the sensor **120**. In an embodiment, the reusable portion **420** includes the potentially more expensive components, including, for example, the sensor light source(s) **230** and detector(s) **260**. The reusable portion **420** may also include the temperature sensor **320**. The temperature sensor **320** may be any suitable sensor that can detect the temperature of the surface of the skin or other patient temperatures. In an embodiment, the temperature sensor **320** may include a thermistor associated with the reusable portion **420** of the sensor **120**.

In an embodiment, the reusable portion **420** includes an interface **510** that couples the reusable portion **420** of the sensor to the brain oximetry unit **140**. The interface **510** may be any suitable electrical or data connection or communication port or device including, for example, a pin connector and receiver. Various other communication or electrical connections known in the art may be utilized. In an embodiment, the interface **510** is an inductance connection utilizing transformers to couple a data and electrical connection across an insulator. In another embodiment, the interface **510** provides a data or electronic coupling between the reusable portion **420** and the disposable portion **410** of the sensor.

FIGS. **3**D-**3**O illustrate various embodiments of a disposable portion **410** of a forehead sensor **120** that, in an embodiment, attaches to a measurement site of a patient's head and provides a base **520** to which the reusable portion **420** may be docked, mated or connected. FIGS. **3**D-**3**E illustrate an embodiment of a single chip disposable portion **410** of the sensor **120**. The disposable portion **410** houses the components of the sensor **120** that may be less expensive than at least some of the components contained in the reusable portion **420** of the sensor **120** and therefore may be disposed after a single or multiple uses, either on the same patient or different patients. The disposable portion **410** of the sensor **120** includes a tape substrate **530** that provides a base or substrate to which at least some of the components of the disposable portion **410** may adhere or be integrated. In an embodiment, the tape **530** can be constructed from any suitable disposable material that will effectively hold the components includes in the disposable portion **410** to a patient's forehead or other measurement site. In an embodiment, the tape **530** includes a suitable dermal adhesive on a patient side of the disposable portion **410** for temporary adhesion of the sensor **120** to a patient's skin.

In an embodiment, the disposable portion **410** of the sensor **120** may incorporate various disposable components which may include, EEG electrodes **440**. In one embodiment, the EEG electrodes **440** may be fastened to the tape **530** of the disposable portion **410**. In an embodiment, the EEG electrodes **440** could be embedded in the tape **530** by any known adhesive in the sensor arts or any other suitable means for connecting the EEG electrodes **440** that would allow the EEG electrode **440** leads to be exposed on a patient side of tape **530** in an appropriate position to come in close proximity to a measurement site of a patient's skin. In an embodiment, EEG electrodes **440** may be gelled so that the gel contacts the electrodes and a measurement site of a patient's skin to provide an electrical path between the measurement site of the patient's skin and the EEG electrodes **440**. In an embodiment, the leads of the EEG electrodes **440** are connected to a single chip by wires or other suitable electrical connections, such a as a printed circuit.

FIGS. **3**H, **3**I, and **3**M, illustrate a temperature sensor **320** associated with the tape of the disposable portion **410** of the sensor **120**. In an embodiment, the temperature sensor **320** is a thermistor with the thermistor leads exposed on a patient contacting side of the tape **530**, in order to facilitate the contacting of the leads of temperature sensor **320** to a measurement site of a patient's skin. In an embodiment, the temperature sensor **320** is connected to single chip through wires or other suitable electrical connections such as a flexible printed circuit. In an embodiment, the temperature sensor **320** may be located anywhere on the tape **530**, the disposable portion **410**, or the reusable portion **420** of the sensor. In an embodiment, the leads for the temperature sensor **320** may be near the center of tape **530** or anywhere on the periphery of tape **530**.

In an embodiment, the disposable portion **410** of sensor **120** may mate and connect to or overlay the reusable portion **420** of the sensor **120**. In an embodiment, the non-patient side of the tape **530** could mate or connect to the reusable portion **420** of the sensor **120** through some suitable adhesive on the tape **530** or some physical connection or mating means. In an embodiment, the disposable portion **410** of the sensor **120** may also contain one or several sensory compartments **540**. The sensory compartments **540** may contain a transparent window or a space for the light source **230** or the detectors **260** of the reusable portion **420** of the sensor **120** to emit and detect emitted light through the space or transparent window.

In one embodiment, the light source(s) **230** and detector(s) **260** of the reusable portion **420** may align with the sensory compartments **540** while the reusable **420** and disposable **410** portions physically connect at places other than the sensory compartments **540** and light sources **230** and detectors **260**. In an embodiment, the light sources **230** and detectors **260** of the reusable portion **420** of the sensor **120** may physically snap into or somehow removably mate with the sensory compartments **540** of the disposable portion **410** of the sensor **120**. In one embodiment, the windows of the sensory compartments **540** may contain certain filters to optimize the wavelengths

intensity, or other characteristics of the light that passes through the windows in the sensory compartments **540**.

In still other embodiments, care may be taken to ensure sterilization of the reusable components is more straightforward, such as, for example, implementing matable electrical connections through magnetic, optical or other coupling mechanisms that can be mostly or entirely housed in separate housings that are easily sterilized and mostly void of cavities or the like that can trap contamination.

FIGS. **3**A, and **3**N show an embodiment with the disposable portion **410** of the sensor electrically connected directly to the reusable portion **420** of the sensor **120** through an interface **510**. In an embodiment, the interface **510** may be any suitable electrical connection such as a pin connector, a snap in lead connector, an optical connection or an inductance connection.

FIGS. **3**H and **3**N show an embodiment of the sensor **120** with a pulse oximeter sensor **310** associated with the sensor **120**. The pulse oximeter sensor **310** shown in FIGS. **3**H and **3**N is an ear pulse oximeter sensor **310** that emits and detects radiation to determine the oxygenation of the blood travelling through the arteries of the ear. Many suitable ear pulse oximeter sensors **310** are known in the art such as those sensors commercially available from Masimo Corporation and disclosed herein with reference to U.S. Pat. No. 7,341,599. In another embodiment, the pulse oximeter sensor **310** may be a forehead pulse oximeter sensor **310** or any other suitable pulse oximeter known in the art or disclosed herein. The pulse oximeter sensor **310** may be connected to the sensor through electrical wires, wirelessly or other suitable electrical or data connection. Data collected from the pulse oximeter sensor **310** may be transmitted to the brain oximetry unit **140** or pulse oximeter **150** or both for conditioning, or processing.

FIG. **3**G illustrates a multi chip embodiment of the disposable portion **410** of the sensor. In an embodiment, the various EEG electrodes **440** each connect to a separate chip that transmits the detected signal to the interface **510**. In an embodiment, the chip transmits the signal to various inductors integrated into interface **510** which transmit the signal to inductors integrated into the reusable portion of the interface **510**.

FIGS. **3**A, and **3**N-**3**O show the reusable portion **420** of the sensor **120** associated with or physically mated with the disposable portion **410** of the sensor **120**. In an embodiment, the reusable **420** and disposable portions **410** of the sensor **120** physically mate at mating sections on the disposable **410** and reusable **420** portions. In one embodiment, the mating sections are located near the light source **230** and detectors **260** on the reusable portion **420** and the sensory compartments **540** on the disposable portion **410**. In an embodiment, the mating sections have rims **550** into which cerebral oximeter **300** emitters **230** and detectors **260** may be placed, snapped into or mated. Rims **550** may be any suitable plastic or other flexible material, including metal that would allow the emitter **230** and detector **260** to press or squeeze fit into place. This would allow the rims to physically hold the emitters **230** and detectors **260** in the proper orientation.

FIGS. **4**A-**4**O illustrate various embodiments of a light source **230** that may be utilized in a cerebral oximeter sensor **300**. FIG. **4**A shows an embodiment of the light source **230** which includes a substrate **610**, guide walls **620**, a dividing wall(s) **630**, a cap **640**, reflective portions **650** on the cap, a splitting mirror **660**, and an aperture **670**. In an embodiment, the light source **230** includes a substrate **610** to provide a base to associate or attach the remaining components. In an embodiment, the light source **230** includes at least one or a plurality of emitters **680**, guide walls **620** attached to the substrate **610**, and a dividing wall **630** rising from the substrate **610**.

FIG. **4**B shows a perspective view of the light source **230** substrate **610** without the cap **640** and one of the guide walls **620**, a dividing wall **630**, four emitters **680**, an emission detector **260** and an aperture **670**. In an embodiment, the dividing wall **630** prevents light emitted from the emitters **680** from directly contacting the emission detector **260** or directly exiting through the aperture **670**. In an embodiment, the aperture **670** and emission detector **260** may be located anywhere on the side of the dividing wall **630** opposite the side associated with the emitters **680**. In one embodiment, the detector **260** is close to the dividing wall **630** and the aperture **670** is spaced further from the dividing wall **630** than emission detector **260**. The aperture **670** can be any suitable opening, slot, space, or gap in the substrate **610** of the light source **230**, in order to allow at least some of the light reflected from the cap **640** or guide walls **620** to pass through the substrate **610** and exit the light source **230**. In an embodiment, the aperture **670** may be a transparent section filled with material that may have optical properties, including a filter or the like.

FIGS. **4**C and **4**E illustrate an embodiment of the light source **230** with the substrate **610**, emitters **680**, cap **640**, the splitting mirror **660**, the dividing wall **630**, the emission detector **260**, the aperture **670** and the polarizer **690** in light path of the light exiting aperture **670**. FIGS. **4**C and **4**E illustrate an example of one possible embodiment of the variety of potential light paths taken by light emitted from the emitters **680**. First, the light is emitted from the emitters **680** and subsequently may be reflected or deflected by the cap **640** towards the splitting mirror **660**. Next, as the splitting mirror **660** includes many smaller reflective components that are angled in different directions, a light beam hitting the splitting mirror **660**, depending on its cross sectional area, may broken into multiple beams. The reflective components will be angled either to direct some of the light taking a certain path toward the emission detector **260** and some of the light taking a path leading to the aperture **670** and out of the light source **230**. In an embodiment, these smaller reflective components of the splitting mirror **660** may be randomly spaced on the angled mirror to provide an even distribution or sampling of emitted light from the various emitters **680** to both the emission detector **260** and the aperture **670**. The cap **640** may have a reflective coating or be made of a reflective material in order to reflect light the emitters toward the splitting mirror **660**.

In an embodiment, the cap **640** may have a curvature similar to the curvature illustrated in FIGS. **4**A, **4**C, **4**E-**4**G, and **4**M and also a similar substrate **610**, guide walls **620**, splitting mirror **660**, aperture **670**, and emission detector **260** geometry to direct light emitted from the emitters **680** to the emission detector **260** and the aperture **670**. This is accomplished by calculating the various angles and light paths of the curvature of the cap, the various angles of the splitting mirror **660**, and the reflective components and the various distances between the various components to maintain optimal light paths as described herein.

FIG. **4**D shows an embodiment of the substrate **620** without the cap **640**. In an embodiment, the substrate **610** can be manufactured by etching out depressions in a block of material to create the guide walls **620**, the dividing wall **630**, and the depressions for the emitter(s) **230**, emission detector **260**, and aperture **670**. The substrate **610** may be made of any suitable material. In one embodiment, the substrate **610** is made from a material that provides an even distribution of temperature such as a ceramic material. FIG. **4**F shows an outside view of the light source **230** with dotted lines repre-

senting the splitting mirror **660** and the aperture **670** associated with the substrate **610** of the light source **230**. In an embodiment, the cap **640** includes back guide wall **625** attached to the cap **640**, the substrate **610**, and the splitting mirror **660**.

FIGS. **4**G and **4**H, and **4**I show embodiments of the light source **230** from different perspectives. In an embodiment, the cap **640** is supported at least in part by the guide walls **620** that extend down from the cap **640** to the substrate **610**. In an embodiment, the cap **640** is dome shaped. FIG. **4**I illustrates a light source **260** with eight emitters **680**. Also shown is an embodiment of the splitting mirror **660** with several different directing reflecting surfaces positioned in different orientations to angle the light rays either toward the aperture **670** or the emission detector **260**. FIG. **4**H shows the splitting mirror **660** as viewed from below the substrate **610**. The dotted lines represent the outline of the cap **640**, the aperture **670**, and the emission detector **260**.

FIGS. **4**J and **4**K illustrate an embodiment of the cap **640** that is divided into different sections, with each section tilted at a predetermined angle to facilitate directing of the light paths from light emitted from the emitter(s) **680** to be directed toward the splitting mirror **660** which would then direct the light to the emission detector **260** or the aperture **670**. In an embodiment, the sections of the cap **640** may be arced to form the guide walls **620**. Also, the cap **640** may include straight segments that are attached to the guide walls **620**. In an embodiment, the splitting mirror **660** may be formed in the cap **640**, be the material of the cap **640**, be fastened to the cap **640**, partially to the cap **640**, to the guide walls **620** or to the substrate **610** or any combination thereof.

FIG. **4**K illustrates the aperture **670** in the form of a semi-reflectant splitting mirror **660** that allows some of the light to pass through the mirror **660** and reflects the rest of the light to emission detector **260**. In this embodiment, the aperture is behind the splitting mirror **660**.

FIG. **4**L illustrates an embodiment of the light source **230** with a splitting mirror **660** that includes both a semi-reflectant component and a completely or more strongly reflective component. In one embodiment, the splitting mirror **660** includes a first semi-reflectant mirror positioned at a first angle that reflects a portion of the emitted light to the emission detector **260** or the aperture **670**. The second reflective surface reflects the remaining light toward the aperture **670** or the emission detector **260**, and in an embodiment, to the opposite of the two components that the first reflective surface direct the light.

FIGS. **4**K-**4**M also illustrate electrical connections **710** that power the emitters **680** and receive data from the emission detector **260** and are associated with or printed on the side of the substrate **610** or other components of the light source **260**. These electrical connections **710** can be any suitable electrical connection and may be printed on any component of the light source **230** including the inside or outside of the cap **640**.

FIG. **4**M illustrates an embodiment with light source **230** that includes a semi-reflectant mirror **660** with the emission detector **260** located behind the semi-reflectant mirror **660**. In this embodiment, the emission detector **260** samples light that passes through the semi-reflectant mirror **660** and the aperture **670** emits light that is reflected from the semi-reflectant mirror **660**.

FIG. **4**N illustrates an embodiment of the light source **230** where at least a part of the space defined by the cap **640**, the substrate **610** and the guide walls **620** are filled with light diffusing material **720**. The light diffusing material **720** could be any suitable light diffusing material **720** known in the art including an epoxy or other plastic material, fiber optics, any epoxy mixed with beads or other materials. In an embodiment, the light diffusing material **720** may cause the light emitted from the emitters **680** to become increasingly evenly distributed in the domains of at least range and intensity, as the path length of the light emitted from the emitter(s) **680** increases. In an embodiment, the light diffusing material **720** will more evenly distribute the intensity and range of the light that is incident on the emission detector **260** and the light exiting the light source through the aperture **670**.

FIG. **4**O illustrates another embodiment of the light source **230** with emitters **680** on far sides of the substrate **610** and angled towards a semi reflectant mirror **660** attached to the cap **640** or guide walls **620**. In this embodiment, when the light is emitted onto the semi-reflectant mirror **660**, some of the rays will pass directly through the semi-reflectant mirror **660** and be detected by the emission detector **260**. The other rays that do not pass directly through semi-reflectant mirror **660** will be reflected. A portion of the reflected rays that have the appropriate incident angle on the semi-reflectant mirror **660** will exit the light source **230** through the aperture **670** after reflecting off the semi-reflectant mirror **660**.

FIG. **4**P illustrates another embodiment of the light source **230** that may not require splitting mirror **660**. In this embodiment, light rays are instead directed to the detector **260** and the apertures **670** by the diffusion and scattering of the light through light diffusing material **720**. The light diffusing material **720** may be any suitable diffuser for dispersing light throughout the inside of the light source **230** including glass, epoxy fill, glass beads, plastic, and any other diffuser, scatterer, mixer or combination known in the art. The light diffusing material **720** may be filled in around emitters **680** or may be a component in front of or around the emitters **680**.

Additionally the cap **640** may reflect light diffused throughout the cavity back towards detector **260**. The cap **640** may be reflective or non-reflective. In an embodiment, the cap **640** absorbs light so that the detector **260** senses light that has passed through the diffuser and has not reflected off the cap **260**, so that it will be similar in quality, for example, intensity, to the light emitted through the apertures **670**. The cap **640** may be made of a suitable metal including, for example, copper and/or gold. In an embodiment, the cap **640** is relatively straight and does not have a rounded profile in order to reduce the cost and complexity of manufacturing and reduce the bulkiness of the light source **230**. This is advantageous as a bulkier, larger sensor will add weight and make the sensor **120** more cumbersome on a patient's forehead.

In this embodiment, the apertures **670** may be directly above the emitters **680** or to the left and right of the emitters **680** so that the emitters will emit light directly outside the aperture **670** and most of the light will not have been reflected off of the cap **640** or other inside surfaces of the light source **230** before exiting the light source **230**. This will provide for simpler construction of the light source **230** and other advantages.

The emitters **680** in an embodiment, may be LEDs, or any other suitable light emitting device known in the art. Also, in an embodiment, the temperature sensor **320** will provide feedback for regulating the intensity of the emitters **680** in addition to the information obtained from the detector **260** inside light source **230**. The operator, therefore, will be able to maintain and determine an accurate intensity for the emitters **680**, leading to more accurate results when processing the signals detected by the detectors **260** of the brain oxygenation sensor **300**. In an embodiment, the embodiments disclosed with reference to FIG. **4** comprise an optical bench whose manufacturing costs are significantly lower than those available to design manufacturers today. Diffusing, scattering, reflecting or mixing material, or combinations thereof, may

advantageously be used to integrate emitted light, thereby providing an optical bench from comparatively low cost manufacturing materials.

FIG. **5** illustrates an embodiment of the calibration curve **730** used to determine the intensity of the light emitted from the light source **230** though the aperture **670**. In one embodiment, the intensity **740** of the emitted light is mapped with respect to the output **750** of the emission detector **260** of the light source **230**. Measuring the output of emission detector **260** will allow the patient monitoring system **100** to calculate a close approximation of the intensity **740** of light being simultaneously emitted from the light source **230** through the aperture **670**.

FIG. **6** illustrates another embodiment of the patient monitoring system that incorporates that brain oximetry unit **140** into a connector **760** for the sensor **120**. This advantageously allows for a streamlined profile and reduced manufacturing costs of the brain oximetry unit **140** and associated wires. In this embodiment, the circuitry for driving the front end and controlling the drive signal of the brain oxygenation sensor **300** may be in the brain oximetry unit **140** which may advantageously be partially or entirely housed by the connector **760**, or may advantageously be partially or entirely housed by the pulse oximeter **150** or other multi-parameter patient monitor. Additionally, the circuitry for processing the signals detected by the detectors **260** of brain oxygenation sensor **300** may also be partially or entirely housed by the connector **760**.

In an embodiment, the connector **760** may also house various other components that control and process the signals from various sensors associated with a patient monitoring system **100**. For example, the connector **760** may house the circuitry for a blood oxygenation sensor **310** in, for example, an embodiment where the sensor **120** incorporates an ear blood oxygenation sensor or other blood oxygenation sensor **310**. In another embodiment, the circuitry for processing, detecting and/or driving the signals for the temperature sensor **320**, or EEG sensor **330** may advantageously be incorporated into the sensor connector **760**.

Also, the signal processing and conditioning circuitry processor for a patient sedation monitor capable of monitoring the EEG signals of a patient and providing feedback on the depth of sedation or awareness of a patient undergoing anesthesia may be partially or entirely incorporated into the connector. Sedation brain function monitors, including those similar to the SEDLine sedation monitor commercially available from Masimo Corporation of Irvine, Calif., and disclosed herein with reference to U.S. Pat. Nos. 6,128,521, 6,301,493, 6,317,627, 6,430,437, among others assigned to Masimo Corporation. The connector **760** may house the circuit board, with six channels for six detectors and the SEDLine algorithm. In this embodiment, a conventional pulse oximeter may include upgraded programming to recognize the connection of a brain oximetry unit **140**, whether separate or housed inside connector **760**, and provide communication and power to the unit **140**. The unit **140** performs the processing and other functionality for the sensor **120**, including storing various algorithms for the associated sensors **120**.

Integration of all or the majority of the associated circuitry and processing components of several different patient monitoring sensors **120** in a single connector **760** advantageously provides a caregiver a simple device that can be attached to the patient's forehead or other areas on the patient, to provide minimal discomfort to the patient and minimal amount of wires and connections to cause electrical interference with instruments in the hospital environment. Additionally, the caregiver will need to spend less time hooking various sensors to a patient where each would otherwise require its own associated monitoring station. Furthermore, this integration of sensor **120** processing components allows some of the processing components to have shared functionality and therefore saves considerably on manufacturing costs. For example, memory chips, processors, or other electrical components may be shared by the various sensors in the connector **760**.

FIGS. **7-13** illustrate various embodiments of the construction of the sensor **120**. FIGS. **7A-7E** illustrate an embodiment of the sensor without the EEG sensor **330** incorporated and includes the disposable portion **410**, reusable portion **420**, interface **510**, connector **760**, sensor compartments **540**, light sources **230** and detectors **260**. The part of the interface **510** on the disposable portion **410** slides into the interface **510** on the reusable portion **420**. The interface **510** on the reusable portion **420** may be integrated into the connector **760** or may be separate and located elsewhere on the body of the sensor. In an embodiment, the interface **510** on the disposable portion **410** may slide into the interface **510** on the reusable portion **420** and lock or be somehow be held into place until it needs to be removed.

The interface **510** may include an EEPROM or other memory device from an authorized manufacturer in order to provide quality control. Also, the interface **510** may also include software programming or functionality for determining how many uses it has gone through, how many times it has been used or applied to a patient, or the date of manufacture to determine if it has expired. Also, the interface **510** may include an EEPROM for storing information unique to the electrodes that can be read by the patient monitoring system **100** or pulse oximeter **150**. The pulse oximeter **150** or patient monitoring system **100** can then determine how many electrodes are contained on the disposable portion **410**, for example, and other information.

FIG. **7E** illustrates the placement of the light sources **230** and the detectors **260** for the brain oxygenation sensor **300**. The light source **230** may be at the outer end of the sensor **120** and emits light into the cerebral cavity of a patient. The two detectors **260** closest to each light source **230** detect light emitted from the light source **230**. For example, the right side light source **230** emits light into the head of a patient and some of the light is returned to the detector **260** closest to the light source **230** and some returns to the detector that is just to the right of the center of the sensor **120**. The path that the light travels through the head of a patient to the closer detector generally does not enter the cerebral cavity and travels as deep as the skull. The light path taken by light detected by the further detector **260** generally enters the cerebral cavity. In an embodiment, the signal from the first detector **260** can be subtracted from the second detector **260** in order to provide the information necessary to calculate the cerebral oxygenation as disclosed herein.

FIGS. **8A-8D** illustrate an embodiment of the sensor **120** with the EEG sensor **330** integrated into the sensor **120**. In this embodiment, the disposable portion includes the EEG electrodes **440**, which are electrically connected to the connector **760** through wires integrated into the body of the disposable portion **410**. In another embodiment, the disposable portion **410** includes the EEG electrodes **440** for electrical contact with a patient's skin. In this embodiment, the disposable portion may not include any wiring except for electrically connecting the EEG electrodes **440** to the reusable portion **420**.

FIGS. **9A-9E** illustrate an embodiment of the reusable portion **420** that allows the reusable portion to be disconnected from connector **760**. In other embodiments, the reusable portion **430** may be permanently connected to the con-

nector **760**. In an embodiment, the reusable portion **420** may be more difficult to disconnect from connector **760** than the disposable portion **410**, and may require the operator to open or disassemble at least a part of connector **760**.

FIG. **9**E illustrates an embodiment of the reusable portion **420** with light sources **230** and detectors **260** some or all of which may take advantage of several features to allow light piping. In an embodiment, the detectors **260** and light sources **230** may have a raised lip **800** that contacts the skin to create a barrier that prevents light from escaping from the light source **230** or detector **260** to the ambient. In an embodiment, the raised lip **800** may be black and absorbent, or reflective. The light sources **230** and detectors **260** may also have a valley or depression on the glass or other transparent or near transparent parts that increases in depth towards the middle of the component. This valley or depression will also advantageously assist with light piping as greater and firmer contact will be made around the edge of the light source **230** or detector **260** allowing less light to escape to the ambient from the light source **230** or emanating from the skin to the detector **230**.

FIGS. **10**A-**10**D illustrate various embodiments of the reusable portion **420** of the sensor **120**. In an embodiment, the reusable portion **420** has multiple layers that are overlaid and connected together. In an embodiment, the layers include a top flexible sleeve **810**, a flex circuit support **820**, a flex circuit **830** and a bottom flexible sleeve **840**. In an embodiment, the top and bottom flex circuit sleeves **810**, **840**, may be bonded together or connected together either at the edges or through other means known in the art with the flex circuit support **820** and flex circuit **830** inside and in-between. The top flexible sleeve **810** may be made of silicone or another suitable material and may be white or another color. The bottom flexible sleeve **840** may be made from silicon or other material and may be black. The flex circuit support **820** may be made from cyrlex, polyester or another suitable material and provides support for flex circuit **830**. Flex circuit **830** may include EEPROM(s), the flexible circuit, the light sources **230** and detectors **260** for the brain oxygenation sensor **300** and the interface **510**. The bottom sleeve includes recesses **850** for the light sources **230**, detectors **260** and temperature sensor **320**.

FIGS. **11**A-**11**E illustrate an embodiment of the connector **760**. The connector **760**, in this embodiment, includes a housing **860** that houses the components of the connector **760**, including for example, printed circuit boards **870** for various functions, such as, for example, SEDLine monitoring, brain oximetry, pulse oximetry, other blood parameter or physiological parameter calculators, combinations of the same or the like. The connector **760** also includes the interface **510** for the disposable portion **410** and reusable portion **420**. The interface **510** in the connector **760** includes a slot **880** for interface **510** on the disposable portion **410**.

FIGS. **12**A-**12**D illustrate an embodiment of the disposable portion **410** that does not include the components for the EEG sensor **330** but includes the components for the brain oxygenation sensor **300**. In this embodiment, the sensor **120** includes the sensory compartments **540** and the interface **510** which may include an EEPROM for security. In an embodiment, the disposable portion **410** includes an adhesive layer **890** that includes a layer of adhesive and a base material to attach the adhesive layer to the main body of the disposable portion **410**. The adhesive layer **890** includes the adhesive for attaching the sensor **120** to the patient's skin. In an embodiment, where the disposable portion **410** does not have the EEG sensor **330** components, the disposable portion **410** will not contain any wires or any other electrical components allowing it to be inexpensively manufactured.

FIGS. **13**A-**13**D illustrate an embodiment of the disposable portion **410** that includes the EEG sensor **330** components. In this embodiment, the disposable portion has the EEG electrodes **440** and wiring for the EEG electrodes **440**. The EEG electrodes **440** may include pads **900** for contact with the patient's skin. The pads **900** fit into openings **910** in the adhesive layer **890** in order to make direct contact with the skin.

FIG. **14** illustrates an example of a display **920** that may be utilized for the sensor **120**. Shown is the brain oxygenation level (bO_2), the heart rate, blood oxygenation, and the sedation level from the SEDLine brain function monitor. As other sensors have been described or could be integrated into the sensor **120** additional parameters may be shown on the display **920**.

Although the foregoing disclosure has been described in terms of certain preferred embodiments, other embodiments will be apparent to those of ordinary skill in the art from the disclosure herein. Additionally, other combinations, omissions, substitutions and modifications will be apparent to the skilled artisan in view of the disclosure herein. Accordingly, the present disclosure is not intended to be limited by the reaction of the preferred embodiments, but is to be defined by reference to the appended claims.

Additionally, all publications, patents, and patent applications mentioned in this specification are herein incorporated by reference to the same extent as if each individual publication, patent, or patent application was specifically and individually indicated to be incorporated by reference.

What is claimed is:

1. A forehead sensor for monitoring the depth of consciousness of a patient comprising:

a first brain oxygenation sensor including:

a first light source package configured to transmit optical radiation towards a cerebral cavity of a patient,

a first detector located on the forehead sensor at a first distance from the first light source package, and

a second detector located on the forehead sensor at a second distance from the first light source package, wherein the first distance is closer to the first light source package than the second distance;

an EEG sensor including electrodes configured to detect electrical signals proximate skin of the forehead of the patient;

a reusable portion configured to house the first brain oxygenation sensor; and

a disposable portion configured to house the EEG sensor and is configured to be removably connectable to the reusable portion.

2. The forehead sensor of claim **1** comprising:

circuitry and processing components for the EEG sensor and the first brain oxygenation sensor; and

a connector configured to connect the disposable portion and the reusable portion, the connector also configured to house a larger portion of the circuitry and processing components.

3. The forehead sensor of claim **2** comprising an interface between the connector and the disposable portion, the interface configured to removably attach the disposable portion to the connector.

4. The forehead sensor of claim **1** wherein the first light source package includes a barrier configured to retain light.

5. The forehead sensor of claim **1** wherein at least one of the first detector or the second detector includes a barrier configured to retain light.

6. The forehead sensor of claim **1** wherein the reusable portion is directly connected to the disposable portion.

7. The forehead sensor of claim 1, comprising a second brain oxygenation sensor including:

a second light source package configured to transmit optical radiation towards the cerebral cavity of the patient;

a third detector located on the forehead sensor at a third distance from the second light source package; and

a fourth detector located on forehead sensor at a fourth distance from the second light source package, wherein the third distance is closer to the second light source package than the fourth distance.

8. The forehead sensor of claim 7, wherein the first brain oxygenation sensor is located at a first end of the forehead sensor and the second brain oxygenation sensor is located at a second end of the forehead sensor.

9. A light source for a brain oxygenation sensor, the brain oxygenation sensor comprising:

a substrate;

a plurality of emitters, attached to the substrate, configured to emit light with at least two different wavelengths towards a tissue site of a patient;

a first detector configured to detect emitted light before it is attenuated by the tissue site of the patient to monitor the intensity of the emitted light;

a cap configured to integrate the emitted light within the light source;

an aperture for at least some of the emitted light to exit the light source towards the tissue site of the patient;

a second detector configured to detect light attenuated by the tissue site of the patient; and

a positioning element configured to position the light source proximate to the tissue site of the patient.

10. The light source of claim 9 wherein the emitters comprise LEDs.

11. The light source of claim 9 wherein the emitters comprise incandescent lights.

12. The light source of claim 9 comprising a light diffusing material positioned within an optical path between the emitters and the tissue site, the light diffusing material configured to scatters light.

13. The light source of claim 12 wherein the light diffusing material comprises a glass or an epoxy, said material positioned proximate the emitters and the first detector.

14. The light source of claim 9 comprising a light diffusing material positioned within an optical path between the emitters and the first detector, the light diffusing material configured to scatter light.

15. The light source of claim 9 wherein the cap comprises a reflective material.

16. The light source of claim 9 wherein the cap comprises a non-reflective material.

17. The light source of claim 9 comprising a splitting mirror configured to directs light to the first detector and the aperture.

18. The light source of claim 9 comprising a temperature sensor operably connected to the substrate.

* * * * *

UNITED STATES PATENT AND TRADEMARK OFFICE

CERTIFICATE OF CORRECTION

PATENT NO. : 8,821,397 B2
APPLICATION NO. : 13/246725
DATED : September 2, 2014
INVENTOR(S) : Ammar Al-Ali et al.

It is certified that error appears in the above-identified patent and that said Letters Patent is hereby corrected as shown below:

In the Claims

In column 24 at line 11 (approx.), In Claim 12, change “scatters” to --scatter--.

In column 24 at line 24, In Claim 17, change “directs” to --direct--.

Signed and Sealed this
Twenty-fifth Day of August, 2015

Michelle K. Lee

Michelle K. Lee
Director of the United States Patent and Trademark Office