UNITED STATES PATENT AND TRADEMARK OFFICE

BEFORE THE PATENT TRIAL AND APPEAL BOARD

APPLE INC.,
Petitioner,

v.

OMNI MEDSCI, INC.,
Patent Owner.

U.S. Patent No. 9,651,533

IPR Case No.: IPR2019-00916

PATENT OWNER'S PRELIMINARY RESPONSE TO PETITION FOR *INTER PARTES* REVIEW UNDER 37 C.F.R. § 42.107

TABLE OF CONTENTS

Table of Authorities iii

List of Exhibits v

I. Introduction 1

II. The Board should deny the Petition on procedural grounds 2

- A. The District Court will resolve the validity arguments before any IPR trial concludes 4
- B. Petitioner does not identify any material differences between the Petition and the parallel '913 Petition 6

III. Claim Construction 10

- A. "*Beam*" and "*optical beam*" 10
- B. "Plurality of lenses" 11
- C. "Pulse rate" 12

IV. The '533 Patent 13

- A. The '533 Patent discloses innovative systems for making accurate non-invasive physiological measurements 13
- B. Priority Date 15

V. The Board should deny the Petition because Petitioner has failed to establish a reasonable likelihood of prevailing as to any claim 16

- A. Ground 1: Claims 5, 7-10, 13, 15-17 are not obvious over Lisogurski and Carlson 16
  - 1. The combination of Lisogurski and Carlson does not teach the Increasing Limitation: a "*light source configured to increase signal-to-noise ratio . . . by increasing a pulse rate of at least one of the plurality of semiconductor sources*" 16
  - 2. The combination of Lisogurski and Carlson does not teach a "*personal device*" 22
  - 3. The combination of Lisogurski and Carlson does not teach a "*wearable measurement device*" 26
- B. Ground 2: Claims 8-9 and 16-17 are not obvious over Lisogurski, Carlson, and Mannheimer 30

VI. Conclusion 30

Certificate of Service 32
Certificate of Compliance Pursuant to 37 C.F.R. § 42.24 33

Table of Authorities

Cases

Cheese Systems, Inc. v. Tetra Pak Cheese and Powder Systems, Inc.,
2013 WL 3984991 (Fed. Cir. 2013) 26

Comcast Cable Comms. v. Rovi Guides, Inc.,
IPR2019-00232, Paper 14 at 12-13 (PTAB May 20, 2019).....6

Cuozzo Speed Techs., LLC v. Lee,
136 S.Ct. 2131 (2016).....2

Depuy Spine, Inc. v. Medtronic Sofamor Danek,
567 F.3d 1314 (Fed. Cir. 2009) 20

Kinetic Concepts, Inc. v. Smith & Nephew, Inc.,
688 F.3d 1342 (Fed. Cir. 2012) 22

KSR Int'l Co. v. Teleflex Inc.,
550 U.S. 398 (2007).....26

NHK Spring Co., LTD v. Intri-Plex Technologies, Inc.,
IPR2018-00752, Paper 8 at 20 (PTAB Sept. 12, 2018) 4, 6

Phillips v. AWH Corp.,
415 F.3d 1303 (Fed. Cir. 2005) 5, 11

Statutes

35 U.S.C. § 314..... 1- 5, 9
35 U.S.C. § 315.....3, 5
35 U.S.C. § 316..... 2, 3, 4, 5, 6
35 U.S.C. § 324.....3
35 U.S.C. § 325.....3

Other Authorities

2011 U.S.C.C.A.N. 67, 69 3

H.R. Rep. No. 112–98, pt. 1, at 40 (2011) 3

S. Rep. No. 110–259, at 20 (2008) 3

United States Patent and Trademark Office, *Trial Practice Guide Update*, 84 Fed. Reg. 33925-33926 (July 15, 2019) 6

United States Patent and Trademark Office, *Trial Practice Guide Update*, 83 Fed. Reg. 39989 (August 13, 2018) 3, 4

List of Exhibits

No.	Description
2101	Apple Inc.'s Final Election of Asserted Prior Art, filed in *Omni MedSci, Inc. v. Apple Inc*., Case No. 2:18-cv-134-RWS (E.D. Tex), May 24, 2019
2102	Scheduling Order, filed in *Omni MedSci, Inc. v. Apple Inc*., Case No. 2:18-cv-134-RWS (E.D. Tex), June 19, 2018
2103	Reserved
2104	Reserved
2105	Reserved
2106	Reserved
2107	Claim Construction Memorandum Opinion and Order, filed in *Omni MedSci, Inc. v. Apple Inc*., Case No. 2:18-cv-134-RWS (E.D. Tex), June 24, 2019
2108	Reserved
2109	Reserved
2110	District Court Scheduling Notice, issued in *Omni MedSci, Inc. v. Apple Inc*., Case No. 2:18-cv-134-RWS (E.D. Tex), July 12, 2019
2111	Omni MedSci's Amended Final Election of Asserted Claims, served in Omni MedSci, Inc. v. Apple Inc., Case No. 2:18-cv-134-RWS (E.D. Tex), May 7, 2019

Omni MedSci, Inc. ("Patent Owner"), submits this Preliminary Response to the Petition for *Inter Partes* Review ("Petition," Paper 1) filed by Apple Inc. ("Petitioner") against claims 5, 7-10, 13, and 15-17 ("Challenged Claims") of U.S. Patent No. 9,651,533 ("the '533 Patent").

I. Introduction

The Petitioner fails to meet its burden on both procedural and substantive grounds.

Procedurally, Petitioner waited until the last possible date to file parallel IPR petitions (this Petition and a petition in IPR2019-00913) against the '533 Patent. As a result, the parallel proceedings, if instituted, will conclude long after the district court adjudicates validity of the '533 Patent in the underlying litigation. *Inter Partes* Review (IPR) was designed as an efficient **alternative** to challenging the validity of a patent in litigation. But because of Petitioner's delay, its parallel petitions act as an improper **supplement** to litigation – unnecessarily increasing cost and duplicating (triplicating) effort. The Board should deny the Petition under 35 U.S.C. § 314(a) because: A) the district court will resolve the invalidity arguments before any trial on the Petition concludes; and B) Petitioner does not identify any material differences between the redundant grounds raised in the parallel petitions, which requires an inefficient use of the Board's resources.

The Petition also fails to meet its threshold burdens on the substantive merits.

First, none of the cited references, alone or in combination, teaches: a "*light source configured to increase signal-to-noise ratio [SNR] by increasing a light intensity from at least one of the plurality of semiconductor sources and by* ***increasing a pulse rate*** *of at least one of the plurality of semiconductor sources*[1]" ("The Increasing Limitation") as required by every Challenged Claim.

Second, none of the cited references, alone or in combination, teach a "*a personal device*," – as required by every Challenged Claim.

Third, none of the cited references, alone or in combination, teach a "*a wearable measurement device*," – as required by claim 13.

Because the Petitioner fails to meet its burden on both procedural and substantive grounds, the Board should deny institution under 35 U.S.C. § 314(a).

II. The Board should deny the Petition on procedural grounds

The Board has discretion to deny institution. 35 U.S.C. § 314(a); *see Cuozzo Speed Techs., LLC v. Lee*, 136 S.Ct. 2131, 2140 (2016). The Board's discretion is informed by 35 U.S.C. § 316(b), which requires the Board to consider "the efficient administration of the Office, and the ability of the Office to timely

[1] Claim language is italicized for ease of reference.

complete proceedings." The Board will also consider whether "the same or substantially the same prior art or arguments previously were presented to the Office." 35 U.S.C. § 325(d). The Board's discretionary determination of whether or not to institute a review also considers "events in other proceedings related to the same patent, either at the Office, **in district courts**, or the ITC." United States Patent and Trademark Office, *Trial Practice Guide Update*, 83 Fed. Reg. 39989, page 10 (August 13, 2018), https://go.usa.gov/xU7GP ["2018 TPG Update"] (emphasis added). *See* 83 Fed. Reg. 39989 (Aug. 13, 2018).

Post Grant Review, including *Inter Partes* Review (IPR), was designed to be an efficient alternative to challenging patent validity in district court. *Id.* at 9. (The AIA was "designed to establish a more efficient and streamlined patent system that will improve patent quality and limit unnecessary and counterproductive litigation costs."). H.R. Rep. No. 112–98, pt. 1, at 45 (2011), 2011 U.S.C.C.A.N. 67, 69 (Post grant reviews were meant to be quick and cost effective alternatives to litigation to resolve questions of patent validity); *see also* S. Rep. No. 110–259, at 20 (2008). To this end, the America Invents Act included specific provisions addressing IPR timeliness (*e.g.*, § 315, § 316(a)(11)) and IPR scope (*e.g.*, § 314, § 316, § 325). Although the Petition is technically timely under § 315, the Board can exercise its discretion to decline to institute review based on scope considerations. *See, e.g.*, 35 U.S.C. § 314(a), § 324(a), § 325(d).

In this case, the Board should exercise its discretion, and deny institution because as explained below: A) the district court will resolve the validity arguments before any IPR trial concludes; B) the Petition contains significant overlap with Petitioner's parallel petition in IPR2019-00913. Maintaining three proceedings challenging the validity of the '533 Patent, two before the Board and one in district court, would weigh against the "efficient administration of the Office;" therefore the Board should exercise its § 314 discretion and deny institution. 35 U.S.C. § 316(b); 2018 TPG Update at 10.

A. The District Court will resolve the validity arguments before any IPR trial concludes

The PTAB has found "that the advanced state of the district court proceeding is an additional factor that weighs in favor of denying the Petition under § 314(a)." *NHK Spring Co., LTD v. Intri-Plex Technologies, Inc*., IPR2018-00752, Paper 8 at 20 (PTAB Sept. 12, 2018) (Precedential). The Board should exercise its discretion to deny the Petition under § 314(a) because the facts here are similar to those in *NHK*.

Patent Owner has asserted the '533 Patent[2] against Petitioner in district

[2] By district court rule, Patent Owner was required to reduce the number of asserted claims in the lawsuit and is currently asserting claims 5, 9, 13, 15, 16, and 17 of the '533 Patent. (Ex. 2111.)

court, and Petitioner was served with the complaint on April 10, 2018. (Ex. 1004.) In district court, Petitioner is challenging the validity of the '533 Patent as obvious over at least eight different combinations of references, including: U.S. Patent No. 9,241,676 to Lisogurski (Ex. 1011), U.S. Patent Application Publication No. 2005/0049468 to Carlson et al. (Ex. 1009), and U.S. Patent No. 5,746,206 to Mannheimer (Ex. 1008), which are the **same references** asserted in this proceeding. (Ex. 2101 at 2; Petition at 3.) The district court set a trial date of February 18, 2020 (Ex. 2102 at 2) and, on July 12, 2019, the district court confirmed that the trial will proceed as scheduled in February 2020 (Ex. 2110).

Petitioner waited until April 10, 2019, *i.e.*, the last day possible under the 1-year time bar of 35 U.S.C. § 315(b), to file the Petition in this proceeding. The institution decision in this proceeding is due within three months of this preliminary response, *i.e.*, by October 22, 2019, and if instituted, a final decision is due within a year of institution, *i.e.*, by October 22, 2020 (35 U.S.C. §§ 314, 316), eight months after trial in the district court. Additionally, the PTAB now analyzes claim construction using the same *Phillips* standard used by the Courts. *Phillips v. AWH Corp.*, 415 F.3d 1303 (Fed. Cir. 2005). Since the district court will determine the validity of the '533 Patent, using the **same claim construction standard**, and over the **same art** in February 2020, the Board should exercise its § 314 discretion

and deny institution. *See NHK Spring Co., LTD*, IPR2018-00752, Paper 8 at 20 (PTAB Sept. 12, 2018) (Precedential).

B. Petitioner does not identify any material differences between the Petition and the parallel '913 Petition

Petitioner filed parallel and substantially overlapping IPR petitions against the '533 patent but has not identified any material differences between them. The Board has denied institution of parallel proceedings filed by the same petitioner, challenging the same claims of the same patent, that fail to identify material differences between the art and arguments. *See Comcast Cable Comms. v. Rovi Guides, Inc*., IPR2019-00232, Paper 14 at 12-13 (PTAB May 20, 2019) ("We find that Petitioner does not identify sufficient differences between [the references in parallel petitions] to support the inefficiencies and costs associated with instituting on an additional petition here."). Citing 35 U.S.C. § 316(b), the Board has stated that "[t]wo or more petitions filed against the same patent at or about the same time . . . may place a substantial and unnecessary burden on the Board and the patent owner and could raise fairness, timing, and efficiency concerns." United States Patent and Trademark Office, *Office Patent Trial Practice Guide Update*, (July 15, 2019), 26 ["2019 TPG Update"]. https://www.uspto.gov/sites/default/files/documents/trial-practice-guide-update3.pdf. *See* 84 Fed. Reg. 33925-33926.

In this proceeding, Petitioner is challenging claims 5, 7-10, 13, 15-17 of the '533 Patent as obvious over three different grounds including combinations of the following references: 1) Lisogurski (Ex. 1011); 2) Carlson (Ex. 1009); and 3) Mannheimer (Ex. 1008). (Petition at 3.)

Petitioner filed a parallel petition on April 10, 2019 in IPR2019-00913 ("the '913 Petition") challenging the same claims of the '533 Patent over combinations of the following references: 1) U.S. Patent Application Publication No. 2012/0197093 to LeBoeuf et al. (Ex. 1005, "LeBoeuf/Valencell-093[3]"); 2) U.S. Patent Application Publication No. US 2010/0217099 to LeBoeuf et al. (Ex. 1006, "LeBoeuf/Valencell-099); 3) Carlson (Ex. 1009); and 4) Mannheimer (Ex. 1008).

As illustrated by the table below, Petitioner's grounds in the IPR2019-00913 Petition challenge the same claims as in this Petition, but merely replace Lisogurski (Ex. 1011) with the combination of LeBoeuf/Valencell-093 (Ex. 1005) and LeBoeuf/Valencell-099 (Ex. 1006).

---

[3] Petitioner refers to Ex. 1005 as "Valencell-093" and Ex. 1006 as "Valencell-099" which adds unnecessary confusion because "Valencell" is not the name of any inventor of either reference. LeBoeuf is the first named inventor listed on both references, so Patent Owner refers to these references as "LeBoeuf/Valencell-093" and "LeBoeuf/Valencell-099."

Claims Challenged	IPR2019-00913	IPR2019-00916
5, 7-10, 13, 15-17	(1) LeBoeuf/Valencell-093 and LeBoeuf/Valencell-099, (2) LeBoeuf/Valencell-093, LeBoeuf/Valencell-099, and Carlson	Lisogurski and Carlson
8-9 and 16-17	(1) LeBoeuf/Valencell-093, LeBoeuf/Valencell-099, and Mannheimer (2) LeBoeuf/Valencell-093, LeBoeuf/Valencell-099, Carlson,[4] and Mannheimer	Lisogurski and Mannheimer

Petitioner does not explain any material differences between Lisogurski and the LeBoeuf/Valencell-093 and LeBoeuf/Valencell-099 combination. Further, both IPR Petitions are the same in the following ways:

First, Petitioner asserts that the same claim terms – "*beam*," "*plurality of lenses*," and "*pulse rate*" – require construction. (Compare '916 Petition at 18-20 with the '913 Petition at 20-22.)

[4] Petitioner describes Ground 3 of the 913 Petition as two grounds: "with and without Carlson." (Petition at 4.)

Second, Petitioner relies on the same expert, Brian W. Anthony, in both Petitions.

Third, both Petitions rely on Carlson for satisfying the "*increasing a pulse rate*" portion of the Increasing Limitation of claims 5 and 13, *i.e.*, increasing the signal-to-noise ratio by "*increasing a pulse rate of at least one of the plurality of semiconductor sources*." (Compare '916 Petition at 27, 37-38 with the '913 Petition at 64, 67-68.)

Fourth, both Petitions rely on Mannheimer for satisfying the Arrangement Limitation of claims 8-9 and 16-17, *i.e.*, "*wherein the receiver is located a first distance from a first one of the plurality of light emitting diodes and a different, second distance from a second one of the plurality of light emitting diodes such that the receiver receives a first signal from the first light emitting diode and a second signal from the second light emitting diode*." (Compare '916 Petition at 66-68 with the '913 Petition at 69-72.)

By choosing to present six different grounds challenging the same claims without identifying any material differences in the references, Petitioner seeks review of redundant arguments, contrary to the purpose of IPR and the directive to ensure efficient use of the Board's finite resources. 35 U.S.C. § 314(a).

III. Claim Construction

Petitioner proposes construing the terms: "*beam*," "*plurality of lenses*," and "*pulse rate.*" (Petition at 18-20.) Patent Owner agrees with Petitioner's proposed construction for "*pulse rate*" but disputes its proposed construction for "[*optical*] *beam*" and "*plurality of lenses*." Petitioner proposed the same constructions for these terms in litigation, and the district court rejected Petitioner's proposed constructions in a Claim Construction Memorandum Opinion and Order issued on June 24, 2019. (Ex. 2107.) Patent Owner agrees with the district court's construction of the terms "[*optical*] *beam*" and "*plurality of lenses,*" and the Board should use the same constructions for the reasons articulated in the district court's Claim Construction Order.

A. "*Beam*" and "*optical beam*"

The '533 Patent expressly defines the term "*optical beam*" as "photons or light transmitted to a particular location in space." (Ex. 1001, 9:28-31.) While Petitioner quotes this definition, it immediately tries to change the definition by adding further limitations not part of the express definition in the patent. The district court rejected the Petitioner's attempt to limit the express definition and adopted the definition in the patent. (Ex. 2107 at 7-9.) ("Accordingly, the Court construes 'beam' as 'photons or light transmitted to a particular location in space.'") Although the district court construed the term "*beam*" alone, Patent

Owner and Petitioner both agree that this construction also applies to "*optical beam"* because the terms are synonymous and defined in the patent. Under *Phillips*, the only proper construction of "*optical beam*" is the definition in the '533 Patent. *Phillips*, 415 F.3d at 1316 ("[O]ur cases recognize that the specification may reveal a special definition given to a claim term by the patentee that differs from the meaning it would otherwise possess. In such cases, the inventor's lexicography governs.")

B. "Plurality of lenses"

Petitioner proposed construing the term "*plurality of lenses*" as used in claims 5 and 13 to mean "two or more transparent surfaces used to collimate (make parallel) or focus rays of light." (Petition at 19-20.) Petitioner proposed a similar construction in litigation, *i.e*., "a plurality of transparent surfaces used to collimate (make parallel) or focus rays of light" in litigation. (Ex. 2107 at 10.)

Patent Owner disagrees with this proposed construction. Petitioner's proposed construction improperly imports limitations from exemplary embodiments of lenses.

The term "*lens,*" as used in the '533 Patent and in the art, includes diverging and complex lenses as well as collimating and focusing lenses. (Ex. 1001 at 17:7–10, 20:12–26; Ex. 1041 at 481-482; Ex. 1046 at 712.)

As the district court held, the term "*lenses*" should be broadly understood to include all types of lenses, including diverging and complex lenses. (Ex. 2107 at 11-12, *see also* Ex. 1001, Fig. 16A, 5:11–15.) A lens may take light and focus it onto a smaller area, but it may also take light and direct it onto a larger area. *Id.* Nothing in the '533 Patent claims or descriptions limits the "*lenses*" term to the former. *Id*. Nor does the goal of increasing the signal-to-noise ratio require a focusing or collimating lens. *Id*. Rather, the '533 patent describes various exemplary ways of increasing the signal-to-noise ratio, such as increasing the light intensity at the source, differencing signals, and increasing the pulse rate of the source, but none of these examples mention, let alone require, focusing the light to increase the signal-to-noise ratio. *Id.*

Accordingly, the term "*plurality of lenses*" should be given its plain and ordinary meaning. Likewise, the district court determined that the term "*lenses*" "has its plain and ordinary meaning without the need for further construction. (Ex. 2107 at 13.)

C. "Pulse rate"

Petitioner proposed construing the term "*pulse rate*" as used in claims 5 and 13 to mean a "number of pulses of light per unit of time." (Petition at 20.) Petitioner and Patent Owner agreed to the same construction in litigation, and Patent Owner agrees with Petitioner's proposed construction of "*pulse rate*" here.

IV. The '533 Patent

A. The '533 Patent discloses innovative systems for making accurate non-invasive physiological measurements

The '533 Patent is directed to measurement systems for making accurate non-invasive physiological measurements of a material or substance. (*See e.g.*, Ex. 1001, 8:30–34; 3:66-4:32.) For example, the '533 Patent discloses using spectroscopy to inspect a sample "by comparing different features, such as wavelength (or frequency), spatial location, transmission, absorption, reflectivity, scattering, fluorescence, refractive index, or opacity." *Id*. at 8:30–34. This may entail measuring various optical characteristics of the sample as a function of the wavelength of the source light by varying the wavelength of the source light or by using a broadband source of light. *Id*. at 8:35–46.

The '533 Patent claims recite a "*light source*" that generates "*an output optical beam*," "*a receiver configured to receive and process at least a portion of the analysis output beam*" and various techniques to address challenges that arise with taking physiological measurements. The Challenged Claims include independent claims 5 and 13. Independent claim 5 is representative and reproduced below with emphasis added to the Increasing Limitation and the personal device limitation:

5. A measurement system comprising:

a light source comprising a plurality of semiconductor sources that are light emitting diodes, the light emitting diodes configured to generate an output optical beam with one or more optical wavelengths, wherein at least a portion of the one or more optical wavelengths is a near-infrared wavelength between 700 nanometers and 2500 nanometers,

the <u>light source</u> configured to <u>increase signal-to-noise ratio</u> by increasing a light intensity from at least one of the plurality of semiconductor sources and **by <u>increasing a pulse rate</u> of at least one of the plurality of semiconductor sources**;

an apparatus comprising a plurality of lenses configured to receive a portion of the output optical beam and to deliver an analysis output beam to a sample

a receiver configured to receive and process at least a portion of the analysis output beam reflected or transmitted from the sample and to generate an output signal, wherein the receiver is configured to be synchronized to the light source;

a <u>personal device</u> comprising a wireless receiver, a wireless transmitter, a display, a microphone, a speaker, one or more buttons or knobs, a microprocessor and a touch screen, the personal device configured to receive and process at least a portion of the output signal, wherein the personal device is configured to store and display the processed output signal, and wherein at least a portion of

> **the processed output signal is configured to be transmitted over a wireless transmission link**; and
>
> a remote device configured to receive over the wireless transmission link an output status comprising the at least a portion of the processed output signal, to process the received output status to generate processed data and to store the processed data.

Increasing Limitation: The '533 Patent describes various techniques for improving the signal-to-noise ratio (SNR) of the measurement. For example, the SNR may be improved by increasing the light intensity from the light source. *See, e.g.*, Ex. 1001 at 4:15–17 ("More light intensity can help to increase the signal levels, and, hence, the signal-to-noise ratio."). The source light may be pulsed, and the pulse rate may be increased to improve the signal-to-noise ratio. *See, e.g., id*. at 5:11–15 ("The light source is configured to increase signal-to-noise ratio by increasing a light intensity from at least one of the plurality of semiconductor sources and by increasing a pulse rate of at least one of the plurality of semiconductor sources.").

B. Priority Date

The '533 Patent was filed as U.S. application No. 14/875,709 on October 6, 2015 and issued on May 16, 2017. (Ex. 1001 at 1.) The '709 Application is a continuation of U.S. application No. 14/108,986 which was filed on December 17,

2013 and issued as U.S. Patent No. 9,164,032. The '709 Application also claims the benefit of, and priority to, Provisional application No. 61/747,487 that was filed on December 31, 2012. (Ex. 1001 at 1-2.)

Patent Owner accepts Petitioner's assertion that the '533 Patent's priority date for all challenged claims is December 17, 2103.

V. The Board should deny the Petition because Petitioner has failed to establish a reasonable likelihood of prevailing as to any claim

A. Ground 1: Claims 5, 7-10, 13, 15-17 are not obvious over Lisogurski and Carlson

1. The combination of Lisogurski and Carlson does not teach the Increasing Limitation: a "*light source configured to increase signal-to-noise ratio . . . by increasing a pulse rate of at least one of the plurality of semiconductor sources*"

Independent claims 5 and 13, from which all other claims at issue depend, both require: "*the* ***light source configured to increase signal-to-noise ratio*** *by increasing a light intensity from at least one of the plurality of semiconductor sources and* ***by <u>increasing a pulse rate</u> of at least one of the plurality of semiconductor sources***. . . ." (Emphasis added.)

Petitioner asserts that Lisogurski teaches increasing the firing rate (the pulse rate) to increase signal to-noise ratio. (Petition at 35-36.) However, the Lisogurski quote relied upon by Petitioner discloses "[t]he system may increase the brightness of the light sources in response to the noise to improve the signal-to-noise ratio"

(Petition at 36, quoting Ex. 1011, 9:46-52) – *i.e.*, Lisogurski teaches increasing signal-to-noise ratio "by increasing the light intensity," not "by increasing a pulse rate."

Petitioner also misleadingly asserts that: (1) Lisogurski "teaches that the sampling rate and LED firing rate can be varied for the same reasons that light brightness is varied" and quotes the following from Lisogurski: "the earlier described embodiments relating to varying light output may also apply to sampling rate;" and that (2) "Lisogurski also explains that increasing the sampling rate 'may result in more accurate and reliable physiological information.'" (Petition at 36, quoting Ex. 1011, 35:7-9 and 33:56-58.)

However, "sampling rate" has nothing to do with adjusting the firing rate of the LEDs. Instead, the sampling rate is the rate at which received signals are processed – and in particular to the rate at which the analog to digital converter samples the signals. (*See* Ex. 1011, 10:23-26 ("In some embodiments, the system may optimize power consumption by varying a sampling rate. The system may digitize a received signal using an analog to digital converter operating at a particular rate."), 34:10-12 ("In some embodiments, the sampling rate may represent the number of samples taken during an "on" period of the drive cycle modulation.").)

This difference is confirmed by the fact that Lisogurski refers to modulating the light drive signal – *i.e.* firing rate – and sampling rate as being two different things. (Ex. 1011, 10:31-32 ("In some embodiments, the system may modulate both a light drive signal and a sampling rate."), 33:47-49, 34:7-36:47.).

While Lisogurski discloses varying the firing rate to reduce power consumption, to synchronize with physiological impulses, to respond to an external trigger, or change the sampling rates—there is no reference to increasing the firing rate to improve the signal-to-noise ratio.

> **The system may vary parameters** of a light drive signal used to generate the photonic signal from a light source **such that power consumption is reduced or optimized. Parameters may include** light intensity, **firing rate**, duty cycle, other suitable parameters, or any combination thereof. In some embodiments, the system may use information from a first light source to generate a light drive signal for a second light source. In some embodiments, the **system may vary parameters in a way substantially synchronous with physiological pulses**, for example, cardiac pulses. In some embodiments, the **system may vary parameters in response to an external trigger**.
>
> ***
>
> The system may generate the light drive signal such that a parameter of the emitted one or more photonic signals varies substantially synchronously with physiological pulses of the subject. For example, the system may generate a light drive signal that varies with a period

> the same as or closely related to the period of the cardiac cycle, thus generating a cardiac cycle modulation. The system may vary parameters related to the light drive signal including drive current or light brightness, duty cycle, firing rate, modulation parameters, other suitable parameters, or any combination thereof.
>
> ***
>
> In some embodiments, the sampling rate may represent the amount of time between 'on' periods. For example, the time between 'on' periods may be the length of time of 'off' period 220 of FIG. 2A. Increasing the duration of the 'off' periods (i.e., decreasing the emitter firing rate) relates to a decreased sampling rate. Similarly, decreasing the duration of the 'off' periods (i.e., increasing the emitter firing rate) relates to an increased sampling rate.

(Ex. 1011, Abstract, 25:46-55, 35:24-31, emphasis added.)

In fact, Lisogurski **<u>teaches away</u>** from "*increas[ing] signal to-noise ratio . . .* ***by increasing a pulse rate*** *of at least one of the plurality of semiconductor source*." Specifically, Lisogurski teaches: "In some embodiments, the system **may change from a modulated light output to a constant light output in response to noise**, patient motion, or ambient light" (Ex. 1011, 9:57-60) – *i.e.*, Lisogurski does not teach increasing, but instead teaches decreasing the pulse rate from a modulated light output to a constant light output. In accordance with this teaching, an ordinary practitioner would not be inclined to modify Lisogurski "*to increase signal to-noise ratio . . .* ***by increasing a pulse rate*** *of at least one of the plurality*

of semiconductor source" as required by this claim limitation. *Depuy Spine, Inc. v. Medtronic Sofamor Danek*, 567 F.3d 1314, 1327 (Fed. Cir. 2009) (Holding a reference teaches away if it "discourage[s] investigation into the invention claimed.").

Petitioner's reliance on Carlson in combination with Lisogurski does not cure this deficiency. Ignoring the fact that Lisogurski teaches away from this claim limitation, Carlson also does not disclose "*the light source configured to increase signal-to-noise ratio . . . by increasing a pulse rate of at least one of the plurality of semiconductor sources*."

Specifically, in the text quoted by Petitioner (Petition at 37-38), Carlson only discloses that a pulse rate is chosen as part of the design process – the designer can choose a particular fixed pulse frequency to avoid ambient light and sunlight: "Carlson teaches that the pulse frequency ("*pulse rate*") is 'chosen in such a way that it is outside the frequency spectrum of sunlight and of ambient light' and it could be '1000 Hz' or 'can be chosen at any other frequency, as *e.g*. 2000 Hz or even higher.'" (Petition at 37-38, quoting Ex. 1009, [0069].)

Petitioner also asserts:

> Figure 8 of Carlson shows increasing the operating frequency F0 of the LEDs as compared to Fig. 7c. Ex. 1009, [0069]. This frequency shift, which corresponds to increasing the "pulse rate" of the emitter,

> increases "significantly the Signal-to-Noise and Signal-to-Background ratio." Ex. 1009, [0069]; Ex. 1003, ¶119.

(Petition at 38.)

However, as discussed above, this cited text of Carlson (Ex. 1009, [0069]) does not disclose "increasing a pulse rate" of at least one of the semiconductor sources while in use, but instead merely teaches choosing, while designing a product, a particular frequency to avoid certain types of light. The referenced Figure 7c merely shows a "power spectrum of physiological signals and ambient light **without** phase shifting or **modulation of the light source** of a sensor" and "a **basic signal contribution due to physiological signal and additional** signal contribution due to **ambient light**." (Ex. 1009, [0044], [0067], emphasis added.) Carlson further states: "A corresponding combined frequency spectrum is shown in Fig. [7]c, which would be detected by a photo diode without the use of any means as described above in relation to FIGS. 1 to 6." (Ex. 1009, [0067].) Hence, Figure 7c does not even address pulsing the light source, which is first addressed in Figure 8 and paragraph 69 after the discussion of Figure 7c. Thus, the light source of the measurement device does not cause an increase in the pulse rate between Figure 7c and Figure 8, as contended by Petitioner.

The combination of Lisogurski and Carlson does not teach a "*light source configured to increase signal-to-noise ratio . . . by increasing a pulse rate of at*

least one of the plurality of semiconductor sources," as claimed, and claims 5 and 13 are nonobvious over the combination. *See, e.g.*, *Kinetic Concepts, Inc. v. Smith & Nephew, Inc.*, 688 F.3d 1342, 1361 (Fed. Cir. 2012) (Petitioner must show where each claim limitation is found in the prior art.). Failure to do so defeats a claim of obviousness. *Id.*

2. The combination of Lisogurski and Carlson does not teach a "*personal device*"

Independent claims 5 and 13, from which all other claims at issue depend, both require the following:

> **a personal device** comprising a wireless receiver, a wireless transmitter, a display, a microphone, a speaker, one or more buttons or knobs, a microprocessor and a touch screen . . .
>
> the **personal device** configured to receive and process at least a portion of the output signal,
>
> wherein the **personal device** is configured to store and display the processed output signal, and wherein at least a portion of the processed output signal is configured to be transmitted over a wireless transmission link. . . .

Petitioner asserts that certain components of the monitor 104 disclosed in Lisogurski comprise a "personal device." (Petition at 49-51.) The monitor 104

components selected by Petitioner, as reflected in the annotated Figure 1 reproduced below from the Petition at 49-50, are the (1) user interface 180, which includes a user input 182, display 184, and a speaker 186, (2) back end processing circuitry 170, which includes processor 172 and memory 174, and (3) communication interface 190.

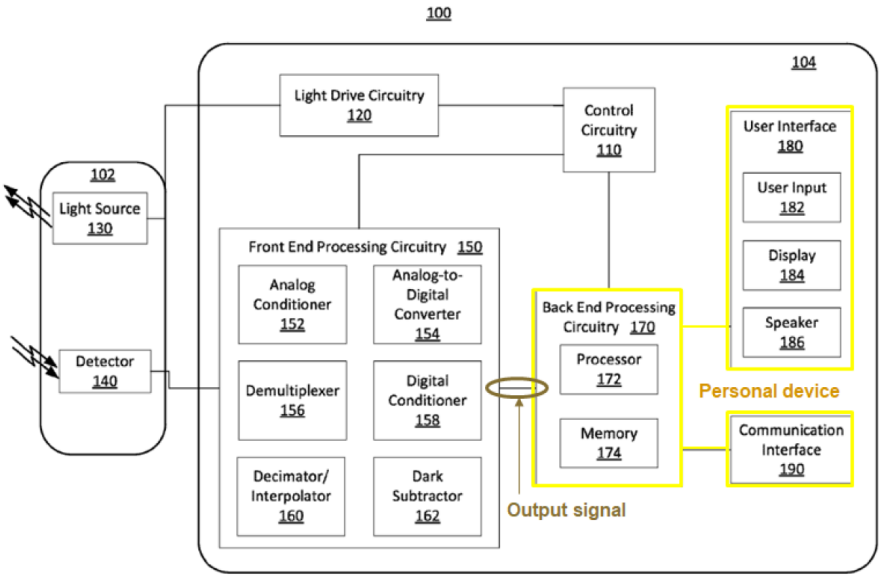

FIG. 1

Ex. 1011, Fig. 1 (annotated), Petition at 50

However, such a device is not disclosed in Lisogurski. Instead, Petitioner and its expert are using hindsight to artificially select components of a monitor 104 and assert that they are a "*personal device*," while deselecting other components, such as those encircled by Petitioner in green and below in the Figures reproduced below, and asserting they are part of a "wearable device" (Petition at 33-34, 47).

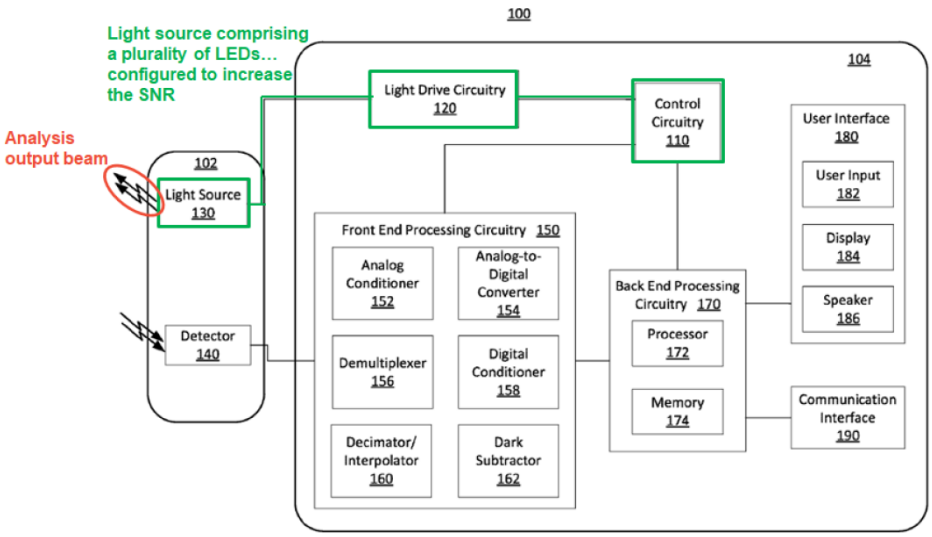

FIG. 1

Ex. 1011, Fig. 1 (annotated), Petition at 33

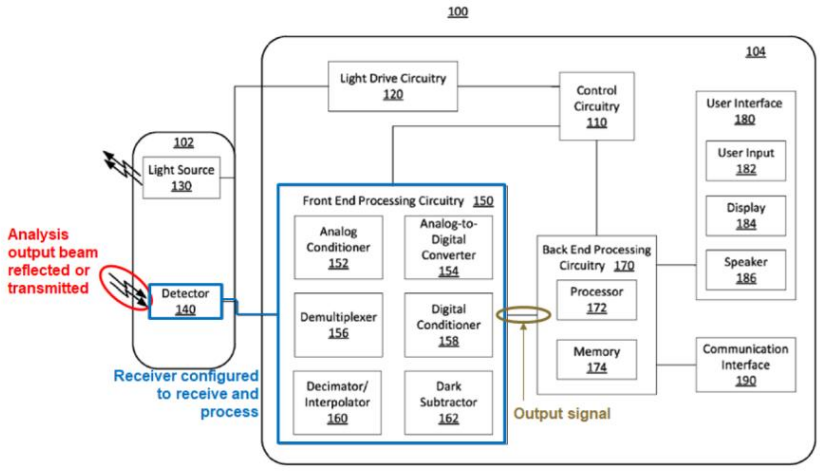

FIG. 1

Ex. 1011, Fig. 1 (annotated), Petition at 47

Lisogurski states that "monitor 314 may be implemented as [the] monitor 104" referenced by Petitioner. (Ex. 1011, 18:14-15.) This monitor 314, encircled in blue, is shown in Lisogurski FIG. 3, reproduced below.

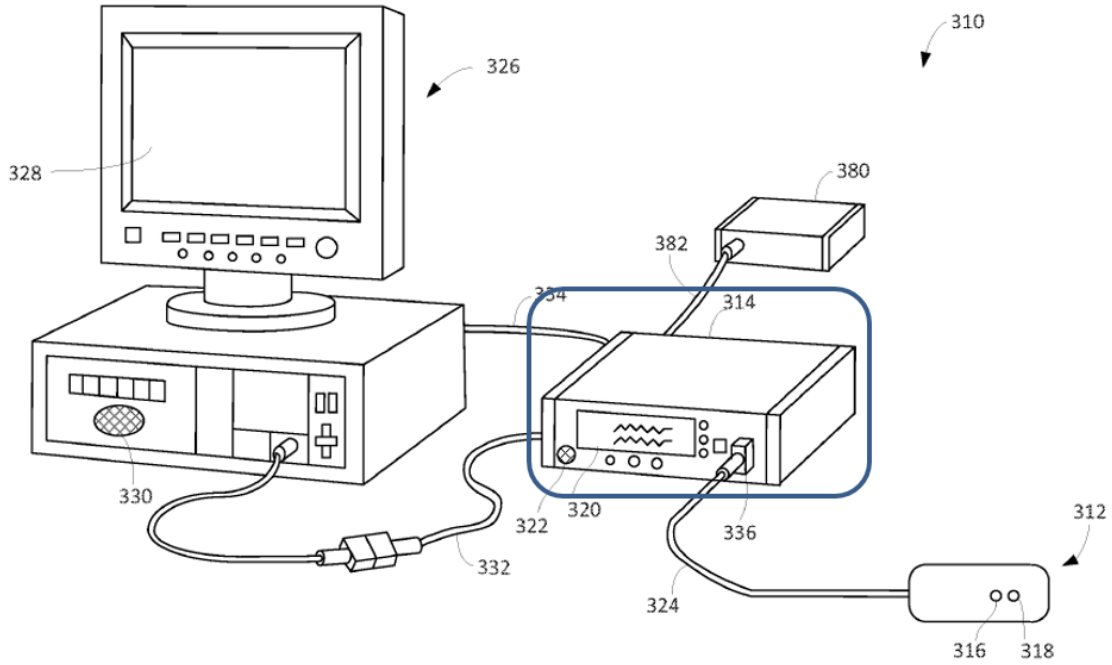

FIG. 3

Ex. 1011, FIG. 3 (annotated)

Regarding the monitor 104, Lisogurski states:

> System 100 may include a sensor 102 and a monitor 104 for generating and processing physiological signals of a subject. In some embodiments, sensor 102 and monitor 104 may be part of an oximeter.
>
> ***
>
> In the embodiment shown, monitor 104 includes control circuitry 110, light drive circuitry 120, front end processing circuitry 150, back end processing circuitry 170, user interface 180, and communication interface 190. Monitor 104 may be communicatively coupled to sensor 102.

(Ex. 1011, 10:44-48, 11:28-32.)

The Board "should be aware, of course, of the distortion caused by hindsight bias and must be cautious of arguments reliant upon ex post reasoning." *KSR Int'l Co. v. Teleflex Inc.*, 550 U.S. 398, 421 (2007). In the present case, there is no hint, let alone teaching, that components are to be selectively excised from the monitor 102 and be reassembled as a "*personal device*" and "*wearable device*." "Obviousness cannot be based on [such a] hindsight combination of components selectively culled from the prior art to fit the parameters of the patented invention." *Cheese Systems, Inc. v. Tetra Pak Cheese and Powder Systems, Inc*., 2013 WL 3984991, *9 (Fed. Cir. 2013). Petitioner's argument is the epitome of using such improper hindsight.

3. The combination of Lisogurski and Carlson does not teach a "*wearable measurement device*"

Independent claim 13 of the '533 Patent requires:

> a **wearable measurement device** for measuring one or more physiological parameters, including a light source comprising a plurality of semiconductor sources that are light emitting diodes, . . . the light source configured to increase signal to-noise ratio by increasing a light intensity from at least one of the plurality of semiconductor sources and by increasing a pulse rate of at least one of the plurality of semiconductor sources;

> the **wearable measurement device** comprising a plurality of lenses configured to receive a portion of the output optical beam and to deliver an analysis output beam to a sample;
>
> the **wearable measurement device** further comprising a receiver configured to receive and process at least a portion of the analysis output beam reflected or transmitted from the sample and to generate an output signal wherein the measurement device receiver is configured to be synchronized to pulses of the light source. . . .

(Ex. 1001, claim 13, emphasis added.)

Petitioner asserts: "Lisogurski teaches a sensor that may be worn on various portions of a person's body. . . ." (Petition at 28, citing Ex. 1011.) However, the Lisogurski text cited merely discloses a "light sensor that is placed at a site on a patient, typically a fingertip, toe, forehead or earlobe, or in the case of a neonate, across a foot" – not a sensor that may be "worn."

More importantly, while Lisogurski discloses placing sensor units of the Lisogurski system on the body, such as the sensor unit 312 encircled in red of the system 310 shown in FIG. 3 reproduced below (Ex. 1011, Fig. 3 together with 17:35-36), Lisogurski does not teach a "*wearable* ***measurement device***," which Petitioner asserts must include components from the box circled in blue below.

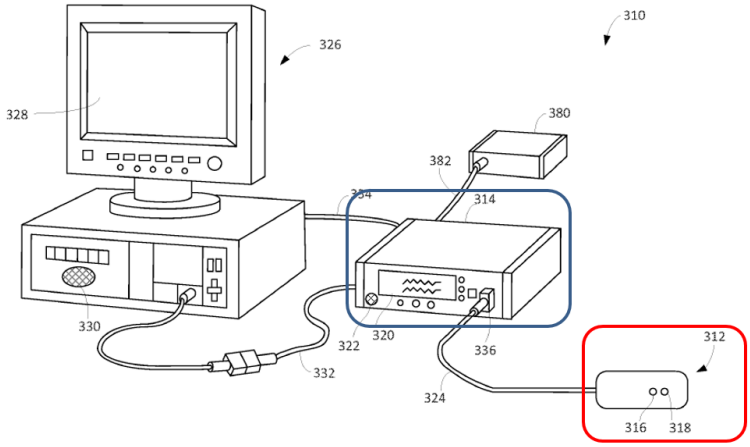

FIG. 3

Ex. 1011, Fig. 3 (annotated)

Further, claim 13 of the '533 Patent requires the following:

> the **wearable measurement device** further comprising a receiver configured to receive and process at least a portion of the analysis output beam reflected or transmitted from the sample and to generate an output signal, wherein the wearable measurement device receiver is configured to be synchronized to pulses of the light source

(Ex. 1001, 30:64-31:3, emphasis added.)

As shown in the FIG. 1 reproduced below from the Petition, Petitioner relies upon the processing circuitry 150 of the monitor 104 to fulfill these "*receiver*" requirements of the "*wearable measurement device*" limitations. (Petition at 47.) However, this processing circuitry 150 is part of the monitor 104, not part of the sensor 102 "placed" on a patient. This can also be seen in FIG. 3 reproduced

above, where the sensor 312 has been circled in red while the monitor 314 containing such circuitry has been circled in blue.

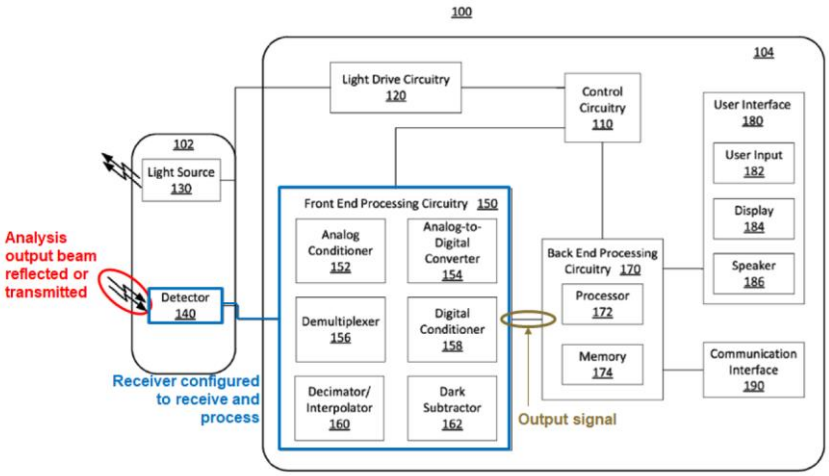

FIG. 1

Ex. 1011, Fig. 1 (annotated); Petition at 47

Petitioner asserts a "skilled person would have found it obvious to integrate the front end processing circuitry of Lisogurski's systems into the sensor" and "would have found a motivation to combine these elements into the sensor component based on general trends in the industry in 2012 . . . , which would encourage inclusion of additional features into wearable devices. . . ." (Petition at 48-49.)

However, Lisogurski, entitled "Methods And Systems For Power Optimization **In A <u>Medical Device</u>**," "is directed towards power optimization <u>in a **medical device**</u> (Ex. 1011, title and 3:43-44; *see also* 3:61-62, 10:39-41) – not a wearable or personal device. There would have been no rationale or reason for an ordinary practitioner to add sensitive circuitry to the sensor of such a medical

device used in a medical setting – where an ordinary practitioner would have wanted the components of the Lisogurski system, especially the sensor unit, to be simple and inexpensive so that they could be easily and inexpensively sanitized or disposed of between patients.

B. Ground 2: Claims 8-9 and 16-17 are not obvious over Lisogurski, Carlson, and Mannheimer

Petitioner does not challenge independent claims 5 and 13 in Ground 2. Like Lisogurski and Carlson, Mannheimer does not teach the Increasing Limitation, the "*personal device"* limitation, nor the *"wearable measurement device"* limitation. Accordingly, the combination of Lisogurski, Carlson, and Mannheimer does not teach these limitations for at least the reasons given above for Ground 1.

VI. Conclusion

In light of the remarks herein, Patent Owner respectfully requests that the Board deny the Petition for *inter partes* review of the '533 Patent.

Respectfully submitted,

Dated: July 22, 2019

/John M. Halan/
Thomas A. Lewry (Reg. No. 30,770)
John S. LeRoy (Reg. No. 48,158)
Robert C. J. Tuttle (Reg. No. 27,962)
John M. Halan (Reg. No. 35,534)
Christopher C. Smith (Reg. No. 59,669)
Andrew B. Turner (Reg. No. 63,121)
BROOKS KUSHMAN P.C.

1000 Town Center, Twenty-Second Floor
Southfield, Michigan 48075
Telephone: (248) 358-4400

Attorneys for Omni MedSci, Inc.

Certificate of Service

The undersigned hereby certifies that on July 22, 2019, a complete and entire copy of **PATENT OWNER'S PRELIMINARY RESPONSE TO PETITION FOR *INTER PARTES* REVIEW UNDER 37 C.F.R. § 42.107 and all Exhibits**, was served via electronic mail by serving the correspondence email address of IPRnotices@sidley.com, which delivers to the following lead and back-up counsel:

LEAD COUNSEL	BACK-UP COUNSEL
Jeffrey P. Kushan (Reg. No. 43,401) SIDLEY AUSTIN LLP 1501 K Street NW Washington, DC 20005 (202) 736-8914	Ching-Lee Fukuda (Reg. No. 44,334) Sidley Austin LLP 787 Seventh Avenue New York, NY 10019 (212) 839-7364 Thomas A. Broughan III (Reg. No. 66,001) Kathi Cover (Reg. No. 37,803) Sidley Austin LLP 1501 K Street NW Washington, DC 20005 (202) 736-8314

Respectfully submitted,

/John M. Halan/
Thomas A. Lewry (Reg. No. 30,770)
John S. LeRoy (Reg. No. 48,158)
Robert C. J. Tuttle (Reg. No. 27,962)
John M. Halan (Reg. No. 35,534)
Christopher C. Smith (Reg. No. 59,669)
Andrew B. Turner (Reg. No. 63,121)
BROOKS KUSHMAN P.C.
1000 Town Center, Twenty-Second Floor
Southfield, Michigan 48075
Telephone: (248) 358-4400

Attorneys for Omni MedSci, Inc.

Certificate of Compliance Pursuant to 37 C.F.R. § 42.24

This paper complies with the type-volume limitation of 37 C.F.R. § 42.24. The paper contains 5,849 words, excluding the parts of the paper exempted by § 42.24(a).

This paper also complies with the typeface requirements of 37 C.F.R. § 42.6(a)(ii) and the type style requirements of § 42.6(a)(iii)&(iv).

Respectfully submitted,

Dated: July 22, 2019

/John M. Halan/

Thomas A. Lewry (Reg. No. 30,770)
John S. LeRoy (Reg. No. 48,158)
Robert C. J. Tuttle (Reg. No. 27,962)
John M. Halan (Reg. No. 35,534)
Christopher C. Smith (Reg. No. 59,669)
Andrew B. Turner (Reg. No. 63,121)
BROOKS KUSHMAN P.C.
1000 Town Center, Twenty-Second Floor
Southfield, Michigan 48075
Telephone: (248) 358-4400

Attorneys for Omni MedSci, Inc.