UNITED STATES PATENT AND TRADEMARK OFFICE

BEFORE THE PATENT TRIAL AND APPEAL BOARD

SAMSUNG ELECTRONICS CO., LTD.,
Petitioner

v.

HEADWATER RESEARCH LLC,
Patent Owner

Case IPR2025-00482
Patent 11,405,429

PETITIONER'S OPPOSITION TO PATENT OWNER'S REQUEST FOR DISCRETIONARY DENIAL OF INSTITUTION

TABLE OF CONTENTS

I. Introduction 1

II. The Petition Should Not be Denied on Discretionary Grounds 3

A. Discretionary Denial is Not Warranted Under §314(a) 4

1. Factor 1: No Stay Has Been Requested 4
2. Factor 2: The Court's Trial Date is Speculative and the Trial will Not Address Patentability of a Majority of Claims Challenged in Samsung's Diligently Filed Petition 6
3. Factor 3: Limited Resources Would Have Been Expended by the Time of the Decision on Institution 8
4. Factor 4: No Overlap Between This IPR and the District Court Proceeding 10
5. Factor 5: The Same Parties are in the Co-Pending Litigation 12
6. Factor 6: Headwater's Identified "Other Circumstances" Lack Merit and Do Not Weigh in Favor of Discretionary Denial 13

B. Additional Considerations in the Stewart Memorandum Also Counsel Against Discretionary Denial 16

1. Whether the PTAB or another forum has already adjudicated the validity or patentability of the challenged patent claims 17
2. Whether there have been changes in the law or new judicial precedent issued since issuance of the claims that may affect patentability 17
3. The strength of the unpatentability challenge 18
4. The extent of the petition's reliance on expert testimony 31
5. Settled expectations of the parties, such as the length of time the claims have been in force 33
6. Compelling economic, public health, or national security interests 33

III. Conclusion 34

Omni MedSci Ex. 2010
Samsung Electronics Co. Ltd., et al., v. Omni MedSci - IPR2025-01251

EXHIBITS

SAMSUNG-1001	U.S. Patent No. 11,405,429 to Gregory G. Raleigh ("the '429 Patent")
SAMSUNG-1002	Excerpts from the Prosecution History of the '429 Patent ("the Prosecution History")
SAMSUNG-1003	Declaration and Curriculum Vitae of Dr. Patrick McDaniel.
SAMSUNG-1004	Complaint, *Headwater Research LLC v. Samsung Electronics Co., Ltd. et al,* 2-24-cv-00228, E.D. Tex., filed April 3, 2024
SAMSUNG-1005	U.S. Pat. App. Pub. No. 2009/0077643 ("Schmidt")
SAMSUNG-1006	U.S. Pat. App. Pub. No. 2005/0101323 ("De Beer")
SAMSUNG-1007	U.S. Pat. App. Pub. No. 2004/0148237 ("Bittmann")
SAMSUNG-1008	(Excerpts) Smith, et al., 2005. "Virtual Machines: Versatile Platforms for Systems and Processes," Elsevier, Inc, 2005, ISBN 1-55860-910-5 ("Smith")
SAMSUNG-1009	Memorandum, Interim Procedure for Discretionary Denials in AIA Post-Grant Proceedings, June 21, 2022, available at https://www.uspto.gov/sites/default/files/documents/interim_proc_discretionary_denials_aia_parallel_district_court_litigation_memo_20220621_.pdf
SAMSUNG-1010	Samsung Stipulation Letter
SAMSUNG-1011	Docket Control Order, CASE NO. 2:24-CV-00228-JRG-RSP
SAMSUNG-1012	Declaration of June Munford
SAMSUNG-1013-1019	RESERVED
SAMSUNG-1020	U.S. Pat. App. Pub. No. 2009/0149165 ("Minborg")

SAMSUNG-1021	U.S. Pat. App. Pub. No. 2007/0117538 ("Weiser")
SAMSUNG-1022	(Excerpts) Telecom Dictionary, Athos Publishing, 2007.
SAMSUNG-1023	(Excerpts) Eberspächer, Jörg (2001). GSM Switching, Services and Protocols, Second Edition. John Wiley & Sons Ltd. ISBN: 978-0-470-85394-8.
SAMSUNG-1024	RESERVED
SAMSUNG-1025	3rd Generation Partnership Project; Technical Specification Group Terminals; "Characteristics of the USIM application" (Release 7), 3GPP TS 31.102 V7.0.0 ("3GPP USIM").
SAMSUNG-1026	U.S. Pat. No. 5,764,693 ("Taylor")
SAMSUNG-1027	U.S. Pat. No. 6,470,182 ("Nelson")
SAMSUNG-1028	U.S. Pat. App. Pub. No. 2006/0015749 ("Mittal")
SAMSUNG-1029	Kasper, et al., 2008, February. "Subscriber authentication in cellular networks with trusted virtual sims." In 2008 10th International Conference on Advanced Communication Technology (Vol. 2, pp. 903-908). IEEE. ("Kasper")
SAMSUNG-1030	TCG Mobile Reference Architecture, version 1.0, Revision 1, June 12, 2007. ("TCG Mobile Reference Architecture")
SAMSUNG-1031	TCG Mobile Trusted Module Specification, version 1.0, Revision 6, June 26, 2008. ("TCG Mobile Trusted Module Specification")
SAMSUNG-1032	U.S. Pat. App. Pub. No. 2006/0020781A1 ("Scarlata")
SAMSUNG-1033	U.S. Pat. No. 6,421,722 ("Bauer")
SAMSUNG-1034	U.S. Pat. App. Pub. No. 2007/0178888 ("Alfano")
SAMSUNG-1035	U.S. Pat. App. Pub. No. 2008/0117958 ("Pattenden")

Omni MedSci Ex. 2010
Samsung Electronics Co. Ltd., et al., v. Omni MedSci - IPR2025-01251

SAMSUNG-1036	Stone, G.N., Lundy, B. and Xie, G.G., 2001. Network policy languages: a survey and a new approach. IEEE network, 15(1), pp.10-21. ("Stone")
SAMSUNG-1037	U.S. Pat. No. 6,556,823 ("Clapton")
SAMSUNG-1038	U.S. Pat. App. Pub. No. 2007/0149252 ("Jobs")
SAMSUNG-1039	RESERVED
SAMSUNG-1040	David K. Gifford. 1982. Cryptographic sealing for information secrecy and authentication. Commun. ACM 25, 4 (April 1982), 274–286. https://doi.org/10.1145/358468.358493
SAMSUNG-1041	RESERVED
SAMSUNG-1042	Jansen, Wayne A. and Richard P. Ayers. "Forensic Tools for Mobile Phone Subscriber Identity Modules." J. Digit. Forensics Secur. Law 1 (2006): 75-94.
SAMSUNG-1043-1048	RESERVED
SAMSUNG-1049	National Institute of Standards and Technology. 2001. Security Requirements for Cryptographic Modules, downloaded from the Internet at https://nvl-pubs.nist.gov/nistpubs/FIPS/NIST.FIPS.140-2.pdf on December 5, 2024
SAMSUNG-1050	Verma, et. al., (2002). Policy-based management of content distribution networks. IEEE network, 16(2), 34-39. ("Verma")
SAMSUNG-1051	Lobo, et. al., (1999). A policy description language. AAAI/IAAI, 1999, 291-298. ("Lobo")
SAMSUNG-1052	Westerinen, et al., IETF RFC 3198, Terminology for Policy-Based Management, November 2001, downloaded from the Internet on May 27, 2024.
SAMSUNG-1053	RESERVED

SAMSUNG-1054	(Excerpts) Keith Mayes and Konstantinos Markantonakis. 2008. Smart Cards, Tokens, Security and Applications (1st. ed.). ("Mayes")
SAMSUNG-1055	(Excerpts) Gasser, Morrie. Building a Secure Computer System. New York, NY: Van Nostrand Reinhold, 1988. ("Gasser")
SAMSUNG-1056	(Excerpts) Malhotra, Ravi. 2002. IP Routing: Help for Network Administrators. O'Reilly Media. ISBN: 978-0-596-00275-0 ("Malhotra")
SAMSUNG-1057	Jude, Michael. "Policy-Based Management: Beyond the Hype." Business Communications Review 31.3 (2001): 52-56. ("Jude")
SAMSUNG-1058	Merkle, Ralph C. 1978. Secure communications over insecure channels. Commun. ACM 21, 4 (April 1978), 294–299. https://doi.org/10.1145/359460.359473 ("Merkle")
SAMSUNG-1059	ARM. 2004. PrimeCell Infrastructure AMBA 3 TrustZone Protection Controller (BP147) Revision: r0p0 Technical Overview, downloaded from the Internet at https://documentation-service.arm.com/static/5e9565afc8052b1608762aae%3Ftoken%3D&ved=2ahUKEwiZq56_3pGKAxVUCnkGHcR9OGIQFnoECAwQAQ&usg=AOv-Vaw2PG8jUG9TU8fpiRxmGKNyM on December 5, 2024
SAMSUNG-1060	Network Associates, Inc. 1999. PGP, Version 6.5.1. An Introduction to Cryptography.
SAMSUNG-1061	Stuart E. Madnick and John J. Donovan. 1973. Application and analysis of the virtual machine approach to information system security and isolation. In Proceedings of the workshop on virtual computer systems. Association for Computing Machinery, New York, NY, USA, 210–224. https://doi.org/10.1145/800122.803961

SAMSUNG-1062	U.S. Pat. App. Pub. No. 2008/0122796 ("Jobs-796")
SAMSUNG-1063	European Telecommunications Standards Institute. 1998. Terrestrial Trunked Radio (TETRA); Security Aspects; Subscriber Identity Module to Mobile Equipment (SIM – ME) interface. ETSI ETS 300 812 ed.1 (1998-11), downloaded from the Internet at https://www.etsi.org/deliver/etsi_i_ets/300800_300899/300812/01_20_9826/ets_300812e01c.pdf on December 12, 2024
SAMSUNG-1064	IETF RFC 1122, Requirements for Internet Hosts – Communication Layers, October 1989, downloaded from the internet at https://datatracker.ietf.org/doc/html/rfc1122 on December 12, 2024.
SAMSUNG-1065	IETF RFC 793, Transmission Control Protocol, September 1981, downloaded from the internet at https://www.ietf.org/rfc/rfc793.txt on December 11, 2024.
SAMSUNG-1066	U.S. Pat. App. Pub. No. 2005/0108534 ("Bajikar")
SAMSUNG-1067	Smith, et al., 2005. "The architecture of virtual machines. Computer," 38(5) ("Smith-2005")
SAMSUNG-1068	ISO/IEC 7498-1, "Information technology - Open Systems Interconnection - Basic Reference Model: The Basic Model," downloaded from the internet at https://www.ecma-international.org/wp-content/uploads/s020269e.pdf on January 10, 2025 ("OSI")
SAMSUNG-1069	Gonçalves, et al., 2009, October. A graphical user interface for policy composition in CIM-SPL. In 2009 International Conference on Ultra Modern Telecommunications & Workshops (pp. 1-7). IEEE. ("Gonçalves")
SAMSUNG-1070	Agrawal, et. al., 2007, May. Issues in designing a policy language for distributed management of IT infrastructures. In 2007 10th IFIP/IEEE International Symposium on Integrated Network Management (pp. 30-39). IEEE. ("Agrawal-2")

SAMSUNG-1071	Samsung Amended Stipulation Letter
SAMSUNG-1072	Interim Process for PTAB Workload Management
SAMSUNG-1073	FAQs for Interim Processes for PTAB Workload Management
SAMSUNG-1074	Rescorla, IETF RFC 2818, HTTP over TLS, May 2000, downloaded from the Internet on May 13, 2025.
SAMSUNG-1075	Dierks, et al., IETF RFC 5246, The Transport Layer Security (TLS) Protocol, Version 1.2, August 2008, downloaded from the Internet on May 13, 2025.
SAMSUNG-1076	Scott, et. al., Virtual Private Networks, Second Edition, January 1999, ISBN 1-56592-529-7.
SAMSUNG-1077	U.S. Pat. No. 8,245,285 ("Ravishankar")
SAMSUNG-1078	Docket Control Order, CASE NO. 2:22-cv-00422-JRG-RSP
SAMSUNG-1079	Court Order, December 23, 2024, CASE NO. 2:22-cv-00422-JRG-RSP
SAMSUNG-1080	Docket Control Order, CASE NO. 2:23-CV-00103-JRG-RSP
SAMSUNG-1081	Court Order, February 5, 2025, CASE NO. 2:23-CV-00103-JRG-RSP
SAMSUNG-1082	(Excerpts) "Taylor – Samsung Semiconductor USA," downloaded from https://semiconductor.samsung.com/us/sas/company/taylor/ on May 24, 2025
SAMSUNG-1083	"Samsung Electronics Unveils a US$200bn Investment Plan in the U.S.," downloaded from https://www.businesskorea.co.kr/news/articleView.html?idxno=97177 on May 24, 2025
SAMSUNG-1084	"Samsung Electronics to receive up to $6.4 billion in direct funding under the CHIPS and Science Act, down-

	loaded from https://semiconductor.samsung.com/us/sas/local-news/samsung-electronics-to-receive-up-to-6-4-billion-in-direct-funding-under-the-chips-and-science-act/ on May 24, 2025
SAMSUNG-1085	"President Trump Says Samsung Is Planning a _Massive Investment_ In The US, Calls It an Aftermath Of His Tariff Policy," downloaded from https://wccftech.com/president-trump-says-samsung-is-planning-a-massive-investment-in-the-us/ on May 24, 2025
SAMSUNG-1086	(Excerpts) Docket Navigator Report, downloaded on May 22, 2025[1]
SAMSUNG-1087	H.R. Rep. 112-98, pt. 1, available at https://www.congress.gov/congressional-report/112th-congress/house-report/98/1 (last accessed on May 27, 2025)

[1] Litigation Activity Report generated using Docket Navigator, with "Parties" exactly matching "Headwater Partners I LLC," "Headwater Partners II LLC," or "Headwater Research LLC."

I. INTRODUCTION

Samsung submits that discretionary denial is not warranted in this proceeding involving the '429 Patent and instead, interests of justice, efficiency, and promoting a strong patent system counsel in favor of an adjudication on the merits.

Samsung is a technology leader with significant and sustained economic activity in the United States, including billions of dollars in new and ongoing investment in this country. *See* §II.B.6; SAMSUNG-1083, -1084, -1085. In contrast, Headwater is a patent assertion entity that has launched an aggressive litigation campaign over the last two-to-three years, that has the potential to disrupt Samsung's significant business and economic activity in the United States. As part of its litigation campaign, Headwater has sequentially filed five lawsuits and asserted 21 patents against Samsung. The '429 Patent is among those 21 asserted patents. SAMSUNG-1086, 2-4.[2]

Samsung diligently prepared and filed a petition requesting IPR of all claims of the '429 patent months ahead of the statutory one-year deadline—thereby seeking an efficient resolution at the PTAB of these claims, which should have never issued

[2] This case and patent count does not include *Headwater Research LLC v. Samsung Electronics Co., Ltd. et al.*, 2-22-cv-00467 (included in SAMSUNG-1076), which was dismissed shortly after filing.

Omni MedSci Ex. 2010
Samsung Electronics Co. Ltd., et al., v. Omni MedSci - IPR2025-01251

in the first instance. Headwater argues that the District Court in the Eastern District of Texas—where the litigation involving the '429 Patent is pending—is best suited to resolve the patentability of this patent's claims. This, however, ignores the District Court's Order, confirming that the Court will not address the patentability of a majority of the claims (i.e., at least 7 of the 12 claims of the patent will not be addressed by the District Court). *See* SAMSUNG-1011, 3; EX-2002, 3. What's more, the '429 Patent's claims underwent little or no scrutiny during prosecution, emerging therefrom without a single prior art rejection. *See generally* SAMSUNG-1002. Therefore, interests of efficiency and promoting a strong patent system are best served by maintaining this proceeding at the PTAB so that the patentability of ***all*** claims of the '429 Patent can be properly addressed.

Moreover, the merits of the Petition are particularly strong and underpinned by competent expert testimony that is heavily corroborated by a large number of patents and printed publications. Headwater only presents a single feeble argument, asserting that two subsystems in the presented combination are not "separately secure" as recited in the claims. DB, 17. This argument is expressly refuted by the teachings of the presented references, which confirm that the two "protected" subsystems at issue are not only "separate" but also include separate security modules and provide separate security (e.g., encryption) mechanisms—thus, rendering these subsystems as "separately secure," as required by claim 1. Headwater also ignores

embodiments of the ’429 Patent that similarly disclose that the subsystems-at-issue have separate security (e.g., encryption) mechanisms. Thus, the grounds presented in the Petition are aligned and consistent with the embodiments of the ’429 Patent (as described further in §II.B.3 *infra*).

And, finally, to extinguish any concerns of potential overlap between this IPR proceeding and the co-pending litigation, Samsung has submitted an updated stipulation that is far more sweeping than a *Sotera* stipulation and further estops Samsung (in the event institution is granted) from “relying on combinations of the prior art asserted in this proceeding with unpublished system prior art (or any other type of prior art).” SAMSUNG-1071; *see Motorola Solutions, Inc. v. Stellar, LLC*, IPR2024-01205, IPR2024-01206, IPR2024-01207 & IPR2024-01208, Paper 19 (PTAB Mar. 28, 2025)).

Thus, under the facts of this case and given the present record, Samsung respectfully requests that the Director decline to exercise discretion to deny institution so that this IPR can proceed to a determination on the merits.

II. THE PETITION SHOULD NOT BE DENIED ON DISCRETIONARY GROUNDS

Headwater seeks to shield the ’429 Patent from an adjudication on the merits by requesting discretionary denial of this IPR proceeding. Headwater purports that an assessment of the *Fintiv* factors and three additional considerations recited in Director Stewart’s Memorandum of March 26, 2025 counsels in favor of discretionary

Omni MedSci Ex. 2010
Samsung Electronics Co. Ltd., et al., v. Omni MedSci - IPR2025-01251

denial.[3] SAMSUNG-1072; Discretion Briefing (DB), 15-17. Contrary to Headwater's contentions, and as explained below, a holistic evaluation of the *Fintiv* factors and the additional considerations in the Stewart Memorandum confirm that discretionary denial of the petition is not warranted.

A. Discretionary Denial is Not Warranted Under §314(a)

As explained below, discretionary denial is not warranted in this case because each of the *Fintiv* factors is either neutral or weighs against discretionary denial. *See Apple Inc. v. Fintiv, Inc.*, IPR2020-00019, Paper 11 at 5-6 (PTAB Mar. 20, 2020) (precedential) ("*Fintiv I*").

1. Factor 1: No Stay Has Been Requested

Fintiv Factor 1 looks to "whether the court granted a stay or evidence exists that one may be granted if a proceeding is instituted." This factor is neutral given that no litigation stay has been requested and no objective evidence exists regarding whether a stay in the litigation will be granted.

As a starting point, neither party has requested a stay of the litigation. Headwater does not dispute this. *See* DB, 3-6.

---

[3] Headwater does not address any considerations under *General Plastic* or *Advanced Bionics*. *See generally* DB. Samsung in turn does not address these considerations in this paper but reserves the right to do so if Headwater later raises these issues.

Moreover, there is no objective evidence indicating whether a stay will be granted here if the IPR is instituted. Headwater's assertion to the contrary is premised on a misguided reliance on cases from the Eastern District of Texas where a motion to stay is filed in the co-pending litigation ***prior to institution in the IPR***. However, the critical inquiry under this factor is whether "evidence exists" that a stay will be "granted ***if a proceeding is instituted***." Indeed, none of Headwater's cited cases categorically rule out stay motions being granted upon IPR institution in the Eastern District of Texas. *See Luminati Networks Ltd. v. Teso LT, UAB*, No. 2:19-CV-00395-JRG, 2020 WL 6803255, at *1 (E.D. Tex. Oct. 30, 2020); *Trover Grp., Inc. v. Dedicated Micros USA*, No. 2:13-CV1047-WCB, 2015 WL 1069179, at *6 (E.D. Tex. Mar. 11, 2015) (Bryson, J.); *Viavi Sols. Inc. v. Zhejiang Crystal-Optech Co.*, No. 2:21-CV-00378-JRG, 2022 WL 16856099, at *5 (E.D. Tex. Nov. 10, 2022).

Headwater's brief also wades into impermissible speculation on how "likely" it is for the District Court to grant a stay of the co-pending litigation. DB, 4-6. Motions to stay invoke fact- and case-specific considerations, and it would be highly prejudicial to Samsung for adverse inferences to be drawn from rulings on stay motions in different and unrelated cases. Indeed, for these reasons, the Board has repeatedly refused to "attempt to predict" how a District Court will rule on such stay motions. *See, e.g.*, *Hulu, LLC v. SITO Mobile R&D IP, LLC*, IPR2021-00298, Paper

11 at 10-11 (May 19, 2021) (because "neither party has produced evidence that a stay has been requested[,]" "[w]e decline to infer, based on actions taken in a different case with different facts, how the District Court would rule should a stay be requested by the parties in the parallel case here.") (partially quoting *Fintiv*); *Sand Revolution II, LLC v. Continental Intermodal Group-Trucking LLC*, IPR2019-01393, Paper 24 at 7 (June 16, 2020) (informative).

2. Factor 2: The Court's Trial Date is Speculative and the Trial will Not Address Patentability of a Majority of Claims Challenged in Samsung's Diligently Filed Petition

Fintiv Factor 2 looks to "proximity of the court's trial date to the Board's projected statutory deadline for a final written decision" as part of a holistic evaluation of fairness and efficiency, which includes considering which forum will assess the patentability of the challenged claims. *See Fintiv I*, at 5-6; *see also Apple Inc. v. Fintiv, Inc.*, IPR2020-00019, Paper 15 at 7-17 (PTAB May 13, 2020) (informative) ("*Fintiv II*") (explaining that, in evaluating the *Fintiv* factors, the Board "takes a holistic view of whether efficiency and integrity of the system are best served by denying or instituting review"); *Illumina, Inc. v. Natera, Inc.*, IPR2019-01201, Paper 19 at 6 (PTAB Dec. 18, 2019) ("We have considered the positions of the parties and find that, on this record, considerations of efficiency, fairness, and the merits of the grounds in the Petition do not weigh in favor of denying the Petition."). This factor weighs against discretionary denial or at worst, is neutral.

As a starting point, trial dates routinely change, as Headwater concedes. DB, 6. Further, such trial date changes are common in the Eastern District of Texas. Indeed, in two prior Headwater suits filed against Samsung, the actual trial occurred 3-5 months after the originally-scheduled trial date. SAMSUNG-1078; SAMSUNG-1079; SAMSUNG-1080; SAMSUNG-1081. Unsurprisingly, even the Office has previously recognized that "scheduled trial dates are unreliable and often change." SAMSUNG-1009, 8. Thus, while the District Court trial is currently scheduled (February 9, 2026) to occur a little over five months before the Final Written Decision will issue (July 29, 2026), that time difference is likely to be reduced, or perhaps eliminated entirely.

Moreover, contrary to Headwater's assertion (DB, 7), Samsung was diligent in filing its petition challenging all twelve claims of this patent about two-and-a-half months before the statutory one-year deadline.

Headwater also argues, incorrectly, that the earlier district trial date (even assuming *arguendo* that date does not change) means "the question of patentability will already be resolved by the District Court" prior to the Final Written Decision. DB, 6-7. Not true. The District Court will not resolve the patentability of a majority of the claims of the '429 patent. Indeed, as Headwater is aware, the District Court has limited Headwater to only assert ***five*** claims. In other words, while Headwater initially asserted all claims against Samsung, the District Court's trial will at most

only address the validity of the selected (e.g., five or fewer) claims.

July 15, 2025	N/A	Secondary Election of Asserted Claims Plaintiff shall serve a Secondary Election of Asserted Claims, identifying no more than 5 claims per asserted patent.

SAMSUNG-1011, 3; EX-2002, 3. What's more, the above-referenced order also does not foreclose Headwater from asserting the other claims in a future litigation against Samsung (at which time, Samsung will no longer have the ability to file an IPR). Thus, efficiency dictates a resolution of the patentability as to all claims, which is possible at the PTAB but not in the co-pending litigation.

In summary, *Fintiv* factor 2 weighs against discretionary denial because the District Court's trial date is speculative and because the District Court will not address the patentability of a majority of the '429 Patent's claims, which Samsung challenged in the petition that it diligently filed months ahead of the one-year statutory deadline.

3. Factor 3: Limited Resources Would Have Been Expended by the Time of the Decision on Institution

Fintiv factor 3—which considers the "amount and type of work already completed in the parallel litigation by the court and the parties at the time of the institution decision"—also favors institution.

As of the petition's filing, the parties had only exchanged infringement and invalidity contentions. And, as of the filing of this paper, the case has not advanced

much since the filing of the petition, e.g., no depositions have been scheduled or have occurred. Moreover, Headwater's assertions of the "significant resources" that would be invested in the District Court as of the Decision on Institution are misleading. *See* DB, 7-8. In particular, while the claim construction briefing and hearing would have occurred shortly before the decision on institution (expected around mid-to-late August)[4], the claim construction order may not have been issued[5], fact discovery will still be ongoing for another month (September 22, 2025) during which time most of the depositions would likely occur, expert discovery would not have begun and would not conclude for about three more months (September 22, 2025 to submit opening expert reports and November 3, 2025 to conclude expert discovery), and dispositive motion briefing would not conclude for about three months (November 3, 2025). *See* SAMSUNG-1011, 3; EX-2002, 3.

---

[4] Note that the petition was filed on January 28, 2025, and the Notice of Accord of Filing Date was received almost a month later on February 26, 2025. The parties have no control over when this notice is issued and it stands to reason that, had the notice been issued earlier, some of the claim construction deadlines (e.g., the claim construction hearing) would not occur by the time of the Decision on Institution.

[5] The Court's Order does not specify when the claim construction order will be issued. *See* SAMSUNG-1011; EX-2002.

Thus, as a practical matter, the litigation will continue to be in its early stages by the time a Decision on Institution is entered in this matter, which further counsels against discretionary denial.

4. Factor 4: No Overlap Between This IPR and the District Court Proceeding

Fintiv factor 4—which considers overlap between issues raised in the petition and in the parallel proceeding—strongly favors institution. As described above, the grounds raised in the Petition cover a majority of the claims that will not be adjudicated in the co-pending litigation, and Samsung's updated stipulation eliminates any potential overlap between the proceedings relating to the minority subset of the claims that Headwater may assert at trial.

In support of its argument for this factor, Headwater first asserts that "the Petition challenges claims 1-12, covering all claims … asserted in the District Court litigation." DB, 9. This statement is misleading. As explained above, the District Court will limit Headwater to assert ***five*** claims (notwithstanding Headwater's initial assertion of all claims of the patent). SAMSUNG-1011, 3; EX-2002, 3.

Thus, the extent of any perceived overlap is limited to at most five of the 12 claims in the '429 patent—and not all claims, as Headwater suggests. In other words, at least seven of the patent's claims will go unaddressed in the District Court, particularly as the case advances through discovery and to trial. Therefore, Headwater's statement—"if the Board were to grant institution in this proceeding, it

would be considering the ***same claims*** of the '429 patent whose validity would have been previously tried before the District Court"—is false. DB, 13 (emphasis added).

Additionally, to eliminate any possible perception of overlap between the PTAB and District Court, Samsung filed an updated stipulation (SAMSUNG-1071) stating that if the PTAB institutes review in this proceeding, Samsung will not pursue in District Court litigation:

- the specific grounds asserted in *inter partes* review in this proceeding, or any other ground that could have been reasonably raised in this proceeding (i.e., any ground that could have been raised under §§102 or 103 on the basis of prior art patents or printed publications) (*see Sotera Wireless, Inc. v. Masimo Corporation*, IPR2020-01019, Paper 12 (PTAB Dec. 1, 2020)); and
- combinations of the prior art asserted in this proceeding with unpublished system prior art (or any other type of prior art) (*see Motorola Solutions, Inc. v. Stellar, LLC*, IPR2024-01205, IPR2024-01206, IPR2024-01207 & IPR2024-01208, Paper 19 (PTAB Mar. 28, 2025)).

As evidenced by the above, Samsung's updated stipulation is far more sweeping than even a *Sotera* stipulation and goes further to allay the concerns raised in the Director's *Motorola* decision (*see id.*) by additionally precluding Samsung's reli-

ance (upon institution) on combinations of art asserted in the proceeding with unpublished system art or any other type of prior art for that matter.[6]

In summary, the District Court trial will not address the majority of the '429 Patent's claims, and in light of Samsung's updated stipulation, institution serves "efficiency and integrity goals" by "not duplicating efforts" and "resolving materially different patentability issues." *Apple, Inc. v. SEVEN Networks, LLC*, IPR2020-00156, Paper 10, 19 (June 15, 2020); *Sand Revolution II, LLC v. Continental Intermodal Group-Trucking LLC*, IPR2019-01393, Paper 24, 12 (June 16, 2020); *Google LLC v. Flypsi, Inc.*, IPR2023-00360, Paper 9, 36-39 (August 2, 2023). Therefore, *Fintiv* factor 4 strongly favors institution.

5. Factor 5: The Same Parties are in the Co-Pending Litigation

Fintiv Factor 5—which considers whether the same parties are at issue in the IPR and the co-pending litigation—is neutral for purposes of assessing whether discretionary denial is warranted.

---

[6] Headwater also argues that Samsung's stipulation permits a subsequent *ex parte* reexamination on grounds that could have been raised in the Petition. DB, 12-13. This argument is speculative and also incorrect because, if an IPR is instituted here and proceeds to a Final Written Decision, Samsung would be estopped from using the grounds used in the Petition in a subsequently-filed *ex parte* reexamination.

Other than noting that the same parties are involved in the District Court litigation and this proceeding, Headwater provides no analysis to support its argument that this factor weighs in favor of discretionary denial. *See* DB, 13. Importantly—and contrary to Headwater's suggestion—*Fintiv* did not say that this factor favors denial simply because the petitioner is also the defendant in a parallel proceeding. Rather, *Fintiv* simply noted that "if a petitioner is unrelated," the Board has weighed that "fact against exercising discretion." *Fintiv I*, Paper 11, 13-14. Here, the similarity of parties in the PTAB and the litigation does not bear on discretionary denial; rather, interests of justice, efficiency, and fairness are best served by adjudicating the merits of Samsung's PTAB challenge (as explained throughout this brief).

6. Factor 6: Headwater's Identified "Other Circumstances" Lack Merit and Do Not Weigh in Favor of Discretionary Denial

As explained below, Headwater's arguments regarding "other circumstances that impact the Board's exercise of discretion" lack merit and also do not counsel in favor of discretionary denial.

First, Headwater asserts that "Petitioner waited nearly an entire year to file its Petition, all but ensuring that the validity of the '429 patent claims would be decided in the District Court litigation months prior to any Final Written Decision in these proceedings." DB, 14. This assertion fails for at least two reasons: (i) the Petition was filed just over nine months after Headwater served its complaint, not "nearly an entire year," as Headwater contends, and (ii) as described above, the District Court

will not consider the patentability of a majority of the '429 Patent's claims.

Second, Headwater contends that the Petition does not present compelling merits of unpatentability, and premises its contention on two assertions: (i) the Petition allegedly does not present any anticipation grounds; and (ii) the Petition purportedly fails to render the claims obvious "for reasons that Patent Owner will highlight in its POPR merit-based briefing (and as illustrated by the expert declaration of Mr. de la Iglesia—Ex. 2006)." *See* DB, 14. Both assertions fail.

Headwater's first assertion ignores that obviousness has long been recognized as a basis for unpatentability and was expressly identified by Congress as a statutory basis for IPRs. *See Graham v. John Deere Co. of Kan. City*, 383 U.S. 1, 3-4 (1966) (obviousness "was intended to codify judicial precedents embracing the principle long ago announced by this Court in *Hotchkiss v. Greenwood*, 52 U.S. 248 (1850)"); 35 U.S.C. §311(b). The Board has therefore consistently instituted IPRs on obviousness grounds, and Headwater has failed to identify a single instance in which the Board found that reliance on obviousness alone undermined the merits of a petition.

Headwater's second assertion also fails because the sole "weakness" in the Petition that Headwater identifies in its brief is expressly refuted by the evidence and arguments put forth in the Petition, which are consistent and aligned with the embodiments described in the '429 Patent's specification—as further explained in §II.B *infra*.

Third, Headwater also asserts that "'additional conditions' weigh in favor of discretionary denial, including the Petition's over-reliance on expert testimony to gap-fill holes in the prior art, as well as the length of time the challenged claims have been in effect." DB, 14-15. This argument lacks merit. The cited expert testimony is not used to "gap-fill holes in the prior art," and tellingly, Headwater did not identify a single example of such alleged gap filling. *See generally* DB. Moreover, as explained in §II.B.4 *infra*, Headwater disregards that the provided expert testimony not only provides context and explanation for the Petition's advanced grounds, but it is also extensively supported by over forty corroboration references.

Additionally, Headwater fails to explain how or why the "length of time the challenged claims have been in effect" favors discretionary denial. *See* DB, 14-15. If anything, the facts here actually indicate the opposite. The application for the '429 patent was allowed without a single prior art rejection and the patent issued in August 2022 (*see generally* SAMSUNG-1002)—which is a little less than 2.5 years before the Petition was filed. The limited scrutiny encountered by the claims during prosecution and the short time that the claims have been in issuance strongly counsel in favor of a merits-based assessment to properly evaluate the quality of this patent. *See* SAMSUNG-1087, 30-40, 47-48 (explaining that post grant proceedings were designed to serve the goal of improving patent quality by enabling efficient challenges to patents that should not have been issued in the first instance). Thus, these

considerations counsel against—rather than in favor of—discretionary denial.

In summary, a holistic evaluation of the *Fintiv* factors strongly counsel against discretionary denial at least because this PTAB proceeding will allow a just and efficient resolution of the patentability of ***all*** claims of the '429 patent (unlike the District Court litigation), while ameliorating, if not avoiding, overlapping or duplicative functions being performed in the co-pending litigation.

B. Additional Considerations in the Stewart Memorandum Also Counsel Against Discretionary Denial

The Stewart Memorandum dated March 26, 2025, titled "Interim Process for PTAB Workload Management," identified additional considerations that may be evaluated when addressing discretionary issues. SAMSUNG-1072. These considerations include:

1. Whether the PTAB or another forum has already adjudicated the validity or patentability of the challenged patent claims;
2. Whether there have been changes in the law or new judicial precedent issued since issuance of the claims that may affect patentability;
3. The strength of the unpatentability challenge;
4. The extent of the petition's reliance on expert testimony;
5. Settled expectations of the parties, such as the length of time the claims have been in force;

6. Compelling economic, public health, or national security interests; and

7. Any other considerations bearing on the Director's discretion.

Headwater's briefing only addresses considerations numbered 2 – 4 above. *See* DB, 15-17. As explained below, a proper consideration of these considerations confirms that discretionary denial is not warranted and that is only further amplified when considering the other considerations recited in the Stewart Memorandum that Headwater omitted from its analysis.

1. Whether the PTAB or another forum has already adjudicated the validity or patentability of the challenged patent claims

No other forum has already adjudicated the validity of the challenged claims. And, as explained in §II.A *supra*, the District Court will not address the validity of a majority of the '429 Patent's claims, leaving the PTAB as the only forum to resolve these issues.

2. Whether there have been changes in the law or new judicial precedent issued since issuance of the claims that may affect patentability

As explained in the Petition and as further confirmed by this brief, the strong merits of the Petition demonstrate that the '429 Patent's claims are unpatentable in view of the prior art and grounds—which were not previously before the Patent Office. There has been no change in law or judicial precedent, particularly as it relates to obviousness under Section 103, that would alter a determination of unpatentability of these claims. Headwater identifies nothing to the contrary.

3. The strength of the unpatentability challenge

The Petition's unpatentability grounds are based on references and invalidity grounds that have never been presented or considered by the Office and are particularly strong on the merits. Indeed, as explained below, the sole "weakness" that Headwater purports to identify within the Petition is premised on an erroneous technical argument that is refuted by the record evidence submitted with the Petition, which is also aligned and consistent with embodiments described in the '429 Patent's specification.

Headwater asserts that the Schmidt-De Beer (Schmidt-DB) ground presented in the Petition fails to satisfy the claim 1 limitation reciting that the "secure execution environment" is "separately secure from the secure modem subsystem." DB, 17. Headwater argues that "Dr. McDaniel presents only conclusory testimony" and "Dr. McDaniel sets forth no plausible theory regarding how those components could actually be separately secure as the claims require." *Id.* Headwater's expert, Mr. de la Iglesia, further contends that "the claim does not merely require that the two systems be 'separate' and 'secure,' but instead requires that they be separately secure such that the security of one is separate from the security of the other." SAMSUNG-2006, ¶¶33-34. As explained below, these assertions and conclusions are refuted by the express teachings of Schmidt, as leveraged in the presented Schmidt-DeBeer ground.

As background, Schmidt describes a Mobile Trusted Platform (MTP) that includes three trusted subsystems (TSSs) that operate on behalf of the device manufacturer (TSS-DM), the network service provider (TSS-MNO), and the device-owner/user (TSS-DO). SAMSUNG-1005, [0028]; '429 Petition ("Petition"), §§III.A.1.a, III.A.1.c, III.A.1.d, III.A.4.[1.4]; SAMSUNG-1003, ¶¶87, 91-94, 233. Schmidt describes these as "three ***separate*** trusted sub systems" and "multiple ***protected, separate*** execution environments," as depicted below. SAMSUNG-1005, [0028], [0030]; Petition, §III.A.3.c; SAMSUNG-1003, ¶233.

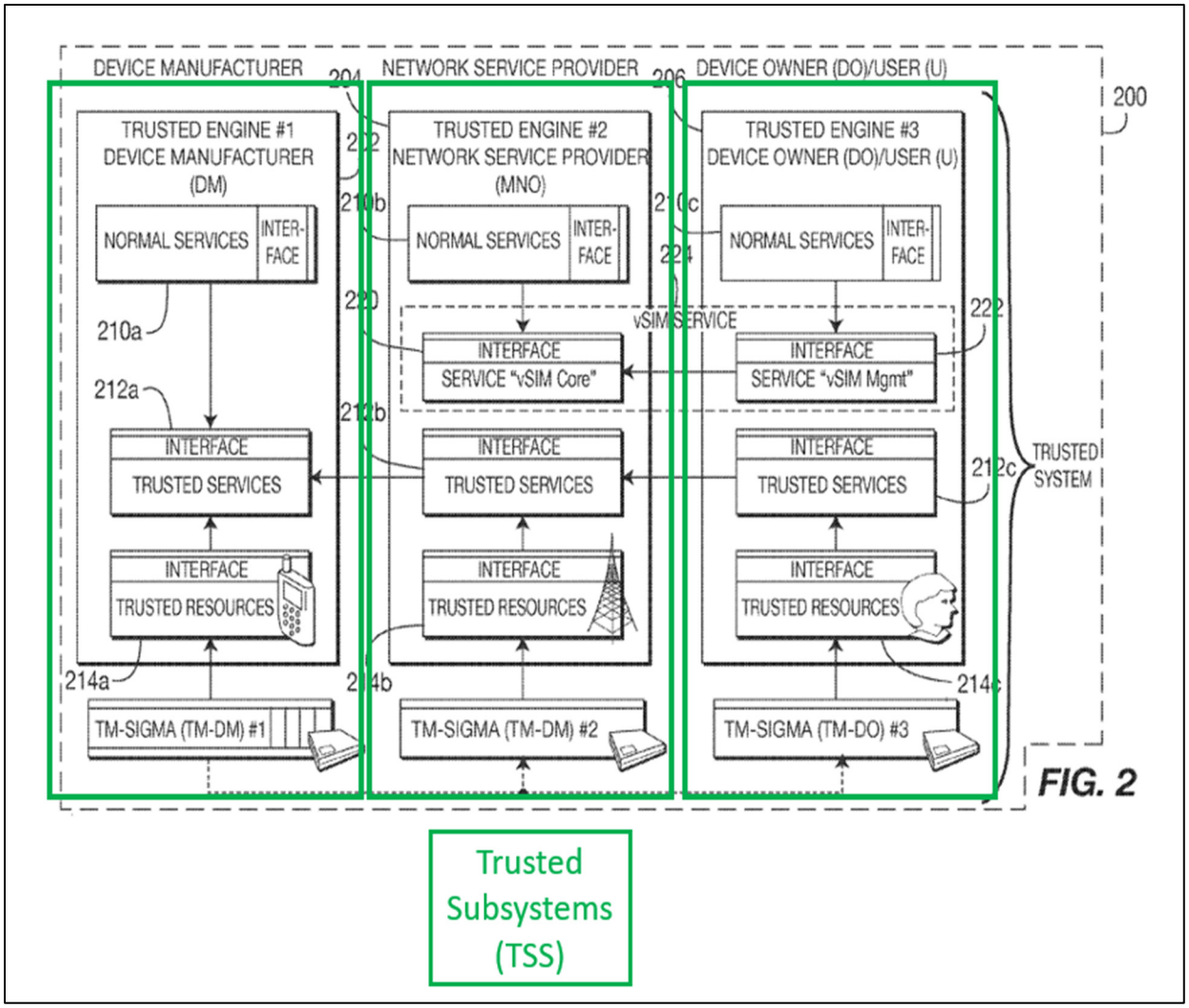

SAMSUNG-1005, FIG. 2 (annotated);[7] *Petition, §III.A.1.*

[7] Although Schmidt's FIG. 2 lists "TM-SIGMA (TM-DM) #2" in the TSS-MNO subsystem, that is a typographical error and should instead read "TM-SIGMA (TM-MNO) #2" as shown in FIG. 3 (reproduced below). This is further confirmed by Schmidt's teaching that "[a] trusted subsystem TSS-sigma is configured as a logical unit comprising the trusted execution environment (TE-sigma) and the non-

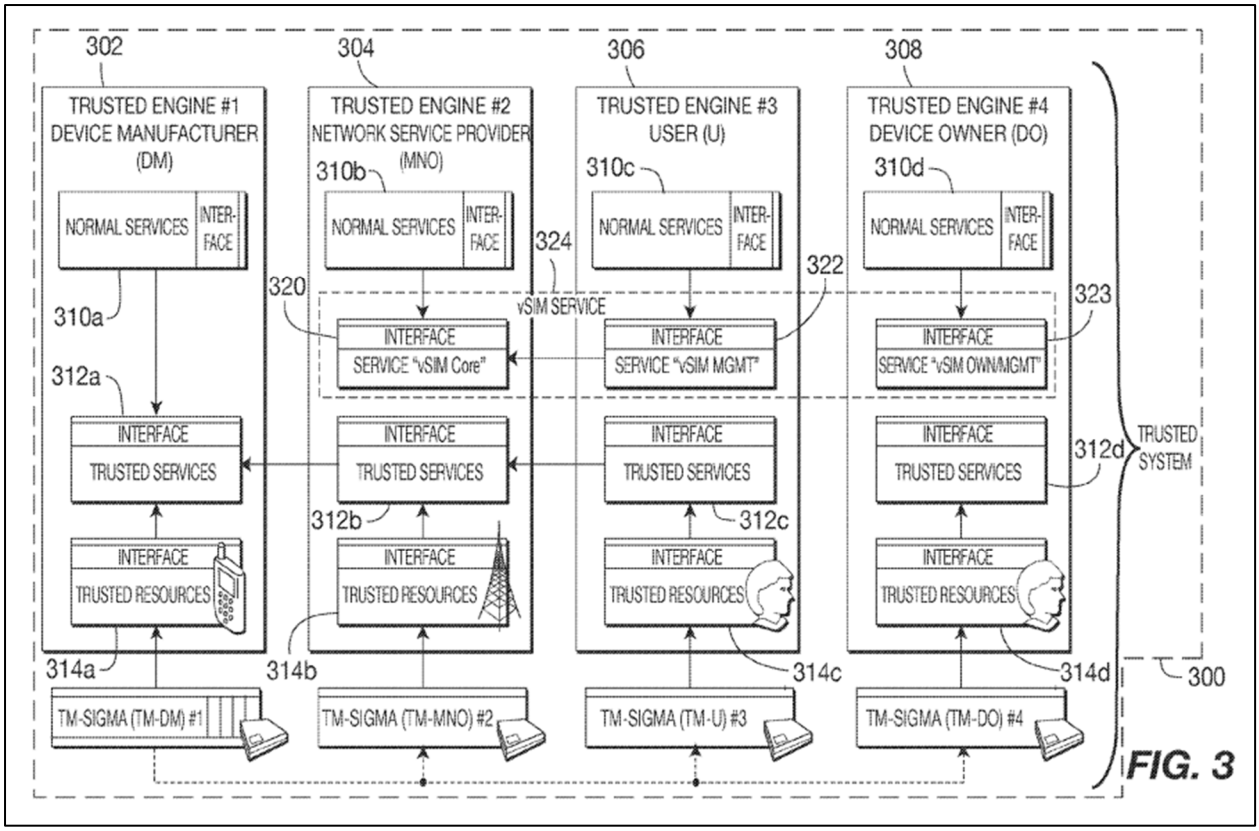

SAMSUNG-1005, FIG. 3; Petition, §III.A.1.

As depicted above and further illustrated below, each of these separate trusted subsystems (TSSs) (which Schmidt also refers to as "trusted engines") includes trusted resources and a "trusted execution environment (TE-sigma)" and "security

---

exchangeable security module (trusted module, TM) or the entity of the security module (TM-sigma) associated with the remote owner (RO) or stakeholder (sigma)." SAMSUNG-1005, [0031]; *see id.*, [0042] (describing setup of the "TM-MNO" security module for the MNO's subsystem/execution environment). Therefore, TM-MNO is associated with TSS-MNO.

module (trusted module, TM) for the entity of the security module (TM-sigma) associated with the remote owner (RO) or stakeholder (sigma)." SAMSUNG-1005, [0031] ("Sigma" identifies DO/User, MNO or DM); Petition, §III.A.1. Each TSS-sigma is "***configured to sign and encrypt***" data. (Emphasis added.) SAMSUNG-1005, [0031]; Petition, §III.A.1, §III.A.3.

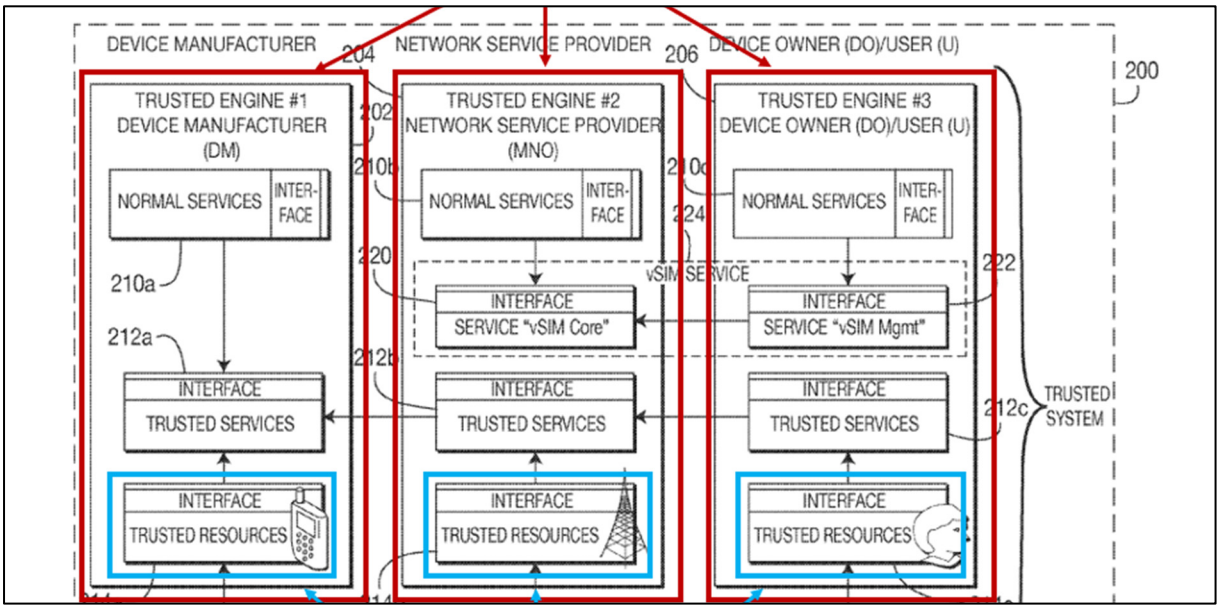

SAMSUNG-1005, FIG. 2 (red annotation identifies trusted engines and blue annotations identify the trusted resources); Petition, §III.A.1

In view of at least these teachings, the Petition and Dr. McDaniel's declaration explained that the presented Schmidt-De Beer combination includes:

- (1) a "secure modem subsystem" that corresponds to transceiver components (TX/RX) and the TSS-DM trusted subsystem, which provides "communications services" and "controls all internal and external communications and secures the communications channel;" and

- (2) a "secure execution environment" that corresponds to the TSS-MNO trusted subsystem and the associated TM-SIGMA, which are responsible for managing "subscription-dependent and subscriber-related network provider services" e.g., GSM and data services.

SAMSUNG-1005, FIG. 2 (modified), [0026], [0032]-[0033]; SAMSUNG-1006, FIGS. 1-2 (modified); Petition, §§III.A.1, III.A.3; SAMSUNG-1003, ¶163. The "secure modem subsystem" and the "secure execution environment" in Schmidt-DB are illustrated below. Headwater's expert does not challenge this combination nor does he dispute that these components in Schmidt-DB are the claimed "***secure*** modem subsystem" and "***secure*** execution environment." *See* EX-2006, ¶30.[8]

[8] Mr. de la Iglesia stated that Dr. McDaniel maps the secure execution environment to Schmidt's TSS-MNO. EX-2006, ¶30. This, however, omits that Dr. McDaniel also identified the TM-SIGMA associated with TSS-MNO, as part of the claimed "secure execution environment." *See* Petition, §III.A.1.[1.4]; SAMSUNG-1003, ¶165, n 14.

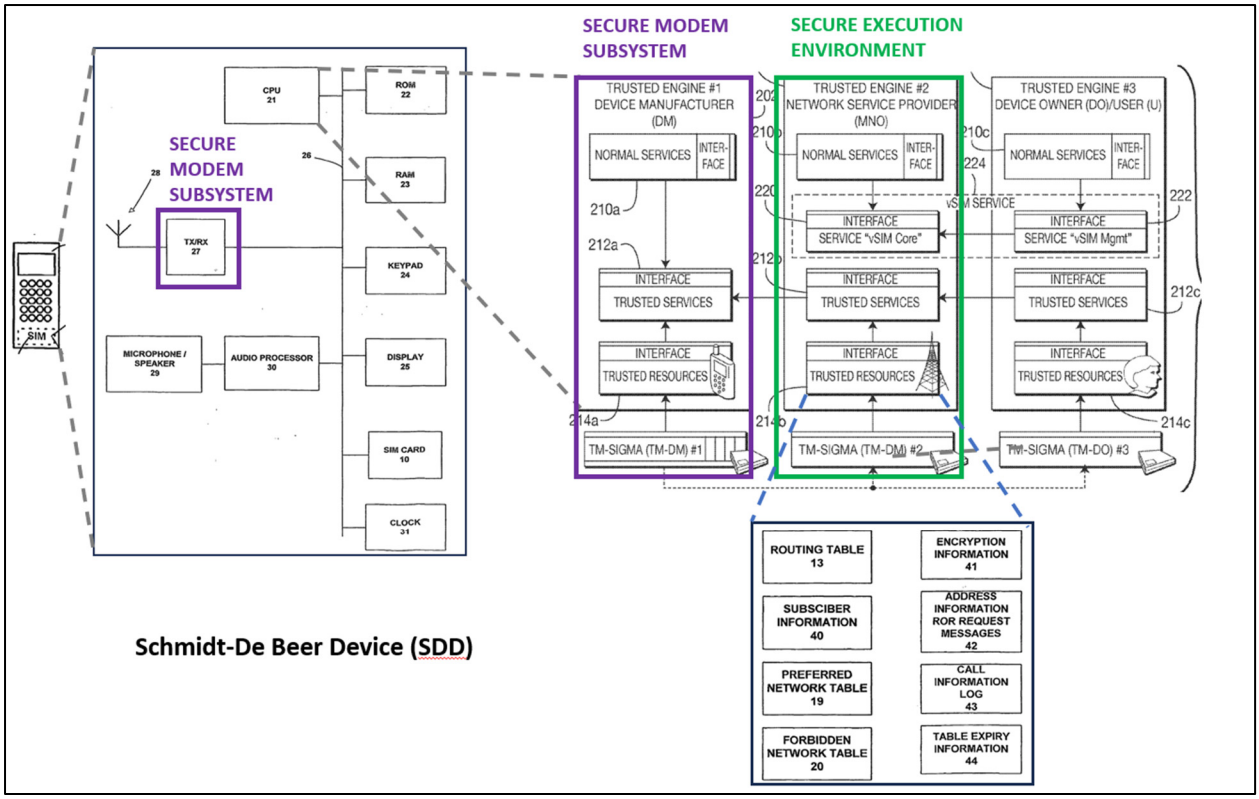

SAMSUNG-1005, FIG. 2 (modified); SAMSUNG-1006, FIGS. 1-2 (modified); Petition, §III.A.3; SAMSUNG-1003, ¶163.

In view of teachings in Schmidt and how they are leveraged in combination, Dr. McDaniel explained that the TSS-MNO (which is part of the claimed "secure execution environment") is separately secure from the TSS-DM (which is part of the claimed "secure modem subsystem") because Schmidt teaches that (1) these are "***separate trusted sub systems***," (2) they are provided as "***multiple protected, separate execution environments***," and (3) each of these separate trusted subsystems

includes separate security modules (TM-DM and TM-MNO) and "is always configured ***to sign and encrypt any given data***." SAMSUNG-1005, [0028], [0030]-[0031]; SAMSUNG-1003, ¶233.

In rebuttal, Headwater's expert first asserts that the TSS-DM and TSS-MNO subsystems are not "separately secure," as recited in the claims. EX-2006, ¶32. According to Headwater's expert, Schmidt's teaching of TSS-DM "control[ling] all internal and external communications" means that TSS-DM and TSS-MNO "are not separately secure from one another." *Id.* This assertion is refuted by the above-described teachings in Schmidt, which confirm that TSS-MNO and TSS-DM are ***separate***, ***trusted***, and ***protected*** execution environments and thus, are "separately secure." SAMSUNG-1005, [0028], [0030]-[0031]; Petition, §III.A.3.c. Headwater's assertion is further discredited by Schmidt's disclosure that each trusted subsystem has a dedicated component that "is ***always*** configured to sign and ***encrypt*** any given data." SAMSUNG-1005, [0031] (emphasis added), [0028], [0041]; SAMSUNG-1003, ¶233. Thus, Schmidt clearly discloses that ***each*** TSS—i.e., each of TSS-MNO and TSS-DM—has its own separate security module (TM-DM and TM-MNO) and encrypts "any given data" that it provides/communicates. Headwater's expert does not point to any disclosure in Schmidt that indicates the encryption performed by the different TSSs are integrated. *See generally* SAMSUNG-1005, [0031]; EX-2006.

Headwater's expert next argues that the TSS-MNO and TSS-DM are not separately secure because, according to him, "a POSITA would realize that their security is highly integrated and that the TSS-DM is responsible for securing the TSS-MNO." EX-2006, ¶32; *see also* POPR, 15 (arguing TSS-DM and TSS-MNO have a security interdependence). As a threshold matter, the expert's only basis for this assertion is the statement in Schmidt that TSS-DM "controls all internal and external communications." EX-2006, ¶32 (citing SAMSUNG-1005, [0032]). However, as explained above, this contention fails to consider Schmidt's teachings, as leveraged in combination, that each of TSS-DM and TSS-MNO are "separate" "trusted" subsystems with separate security modules (TM-DM and TM-MNO), and each subsystem encrypts its respective communications and includes dedicated components for performing such encryption. SAMSUNG-1005, [0028], [0030]-[0035], [0036]-[0037], [0042], FIGS. 2, 3; SAMSUNG-1003, ¶¶87, 91-94, 233. Thus, in the combination, where TSS-MNO and TSS-DM are provided as separate and protected execution environments/subsystem that encrypt their respective communications, there is, by design, no integration. *See id.*

Unsurprisingly, Headwater's expert cites no corroborating references in support of his conclusion that the security is "highly integrated" because, as explained below, even a rudimentary understanding of secure systems contradicts his conclu-

sion. EX-2006, ¶32; *see generally* SAMSUNG-1005. Indeed, much like the presented combination where a device's communication over a network can be secured using multiple separate security mechanisms, in the relevant timeframe, it was common for multiple security mechanisms to be implemented for network communication. Consider the common use of a computing device where a user can access a secure website (which is protected using the HTTPS protocol as indicated by ***https*** in a web link, e.g., https://www.example-website.com) over a VPN connection. *See, e.g.*, SAMSUNG-1074, 1-2 (explaining that HTTPS uses ***TLS or SSL-based security*** mechanisms for HTTP traffic for accessing the website), 4-5 (contemplating use of symmetric encryption as part of TLS/SSL protocols); *see id.*, SAMSUNG-1075, 1, 4; SAMSUNG-1076, 10 (explaining that "VPNs allow you to create a secure, private network over a public network such as the Internet" using a secure link created "through encryption, authentication, packet tunneling, and firewalls."), 14 (VPNs use an encryption protocol that "essentially packages data into a secure envelope"), 15 (using ***IPSec for the encryption*** of VPN traffic). In such use cases, both HTTPS and VPN protocols would secure communications when a device accesses a website using HTTPS. *See id.* And even though they are used together, each still "separately secure[s]" the communication, e.g., each separately encrypts the data, and even uses different encryption standards (TLS for HTTPS and IPSec for VPN). *See id.*

Similarly, in the Schmidt-De Beer combination, both TSS-DM and TSS-MNO includes separate security modules and each is configured to "sign and encrypt any given data" provided by that subsystem (SAMSUNG-1005, [0028], [0030]-[0031])—such that TSS-MNO encrypts data and passes it to TSS-DM, and TSS-DM in turn separately encrypts the data and transmits this dually encrypted data, e.g., to an entity in the network. One example of this communication flow is illustrated in the Petition in §III.A.4.[3.2] and reproduced below.

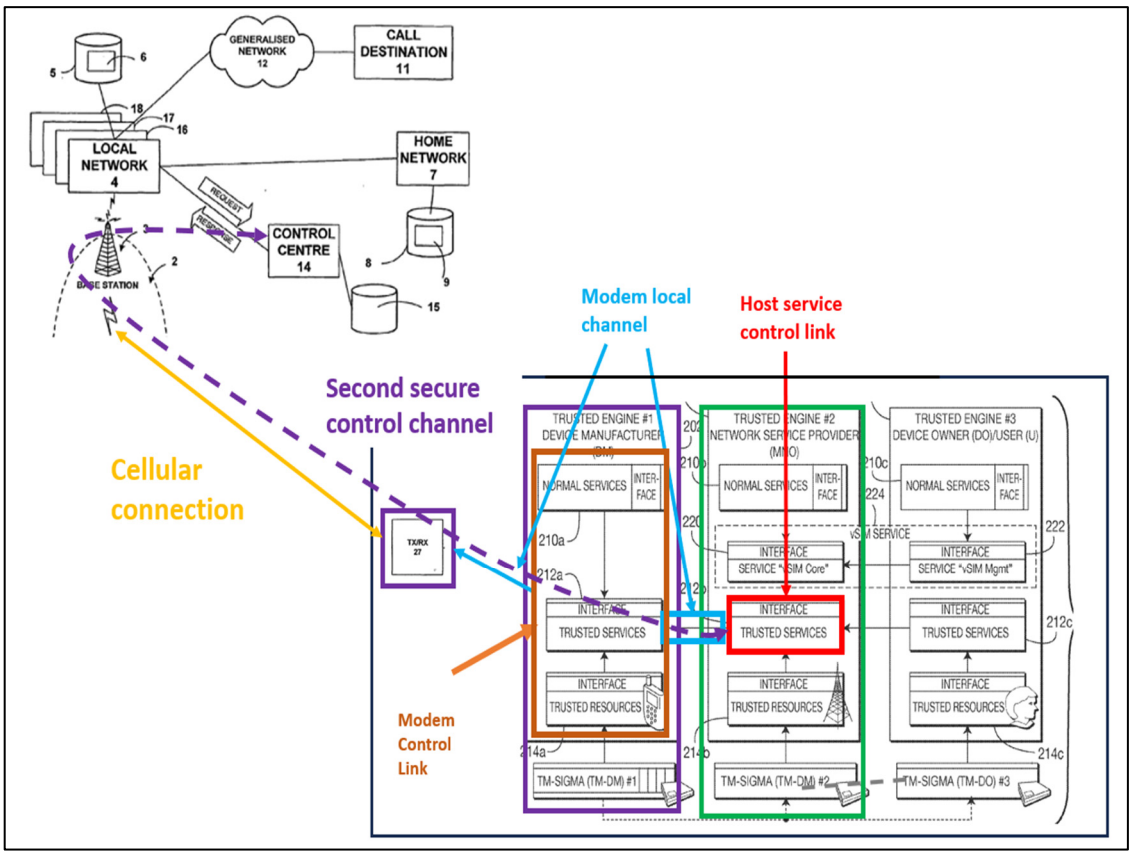

Petition, §III.A.4.[3.2]; SAMSUNG-1005, FIG. 2 (annotated); SAMSUNG-1006, FIGS. 1, 2 (annotated); SAMSUNG-1003, ¶269.

In addition, since TSS-MNO and TSS-DM separately encrypt the data, TSS-DM cannot access data encrypted by TSS-MNO, and vice-versa. Further, data transmitted by TSS-MNO is secure regardless of whether it is subsequently also transmitted by TSS-DM, and data transmitted by TSS-DM is secure regardless of whether it originated at TSS-MNO. Thus, TSS-MNO and TSS-DM are separately secure at least because the security of one does not depend on the security of the other. Thus, even if the claim is interpreted to "require[] that [these components] be separately secure such that ***the security of one is separate from the security of the other***" (SAMSUNG-2006, ¶33 (emphasis added)), that is plainly the case in the Schmidt-De Beer combination (per Schmidt's teachings), where the encryption performed by each TSS is separate from the encryption of other TSSs. SAMSUNG-1005, [0031]; SAMSUNG-1003, ¶¶215, 233. Indeed, Headwater itself acknowledges that "each subsystem's use of encryption mechanisms would imply that communications from each subsystem might be independently secured." POPR, 15.

Finally, the above-described teachings of separate subsystems that provide their own separate encryption are analogous to disclosures in the '429 Patent itself. As a starting point, the '429 Patent does not use the phrase "separately secure" in the context of describing a secure modem subsystem and a secure execution environment. *See generally* SAMSUNG-1001. The patent does, however, depict (as shown below) and disclose each of a "protected DAS execution partition 414" (highlighted

in blue; which may correspond to the claimed "secure execution environment") and the "modem sub system 125" (highlighted in green; which may correspond to the claimed "secure modem subsystem") including an encryption component (highlighted in yellow).

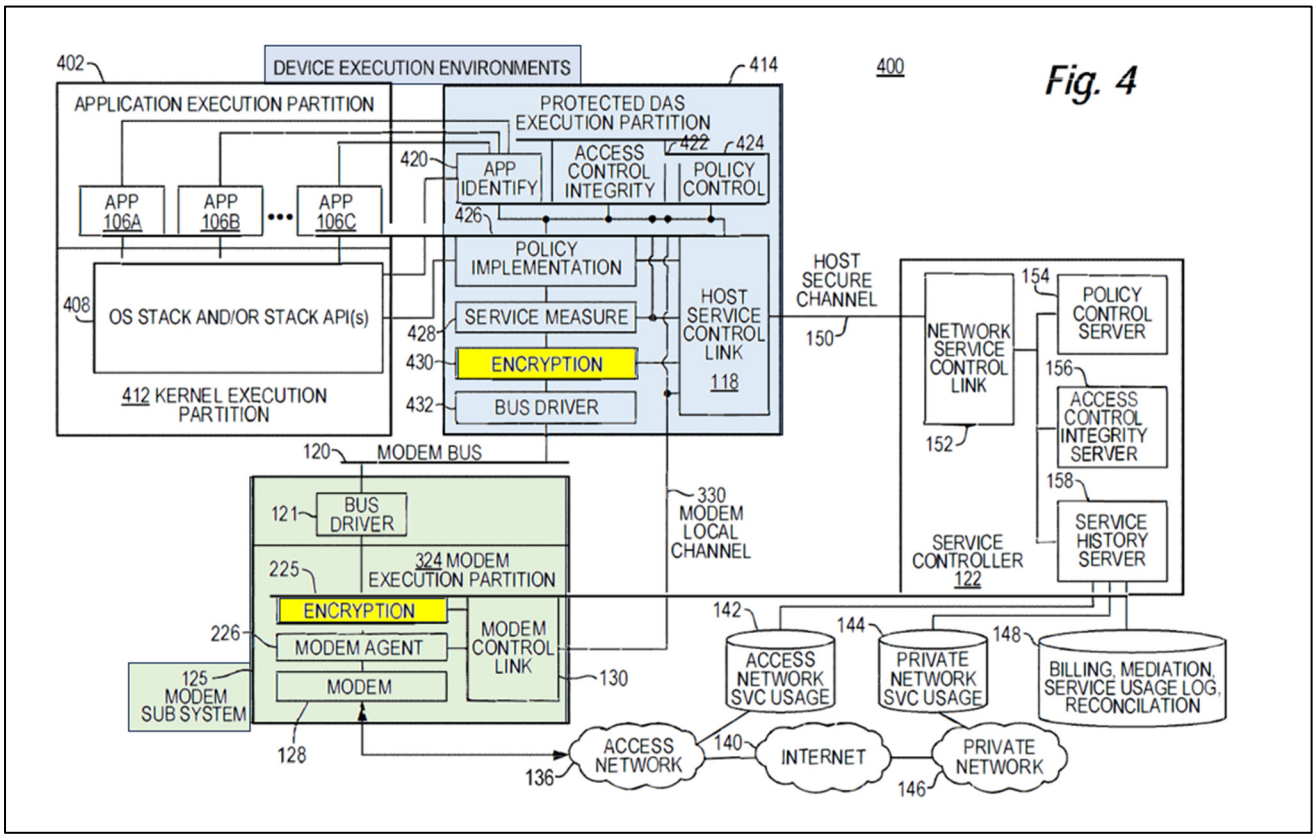

SAMSUNG-1001, FIG. 4 (annotated).

Thus, much like the '429 Patent's embodiment where the secure modem subsystem and secure execution partition are separately secure in that each has a respective encryption component, Schmidt's teachings as leveraged in the Schmidt-DB combination similarly disclose that the corresponding components in Schmidt-De

Beer (i.e., TSS-MNO and TSS-DM) are also separately secure because they are separately protected and have separate encryption sub-components for encrypting the data and communications of these components.

In summary, Headwater's sole challenge to the strength of the petition lacks merit and is refuted by express teachings in Schmidt, which are further aligned with the description of the same feature in the '429 Patent's specification. Thus, the compelling merits of the Petition strongly weigh against discretionary denial.

4. The extent of the petition's reliance on expert testimony

The Petition is supported by the expert declaration of Dr. Patrick McDaniel. *See generally* SAMSUNG-1003. As explained below, Dr. McDaniel's declaration includes testimony, which is not only guided by years of education and experience, but is further corroborated by ample documentary evidence that confirms and amplifies the positions and unpatentability arguments advanced in the Petition.

Patent Owner notes the expert declaration is 227 pages. DB, 16.[9] As the PTAB further clarified in its "FAQs for Interim Processes for PTAB Workload Management," "[i]t is most helpful if an expert is providing focused testimony, for example to provide helpful context or to explain terms of art." SAMSUNG-1073, 6.

[9] In its page count, Headwater misleadingly includes Dr. McDaniel's experiences, CV, POSITA definition, and understanding of legal standards.

Consistent with this guidance, Dr. McDaniel's expert declaration provides such context and explanations. For example, Dr. McDaniel provides the context of mobile devices (SAMSUNG-1003, ¶¶50-53), a description of policy-based management (SAMSUNG-1003, ¶¶54-63), and an overview of [communication] channels (SAMSUNG-1003, ¶¶64-76). Among numerous other examples, Dr. McDaniel provides context for Schmidt's invention (SAMSUNG-1003, ¶¶83-84), explains "trust anchors" (¶87), provides the context of the Trusted Computing Group's Mobile Reference Architecture (SAMSUNG-1003, ¶¶89-90), explains the term "seal" in the context of cryptography (SAMSUNG-1003, ¶92, n8), describes subscriber identification and authentication in GSM networks (SAMSUNG-1003, ¶124), and explains the OSI networking model (SAMSUNG-1003, ¶¶228-231)—all of which support the unpatentability theories in the Petition. Additionally, Dr. McDaniel provides testimony—that is heavily corroborated by documentary evidence—demonstrating obviousness of the presented combinations, including providing motivations for why and how a POSITA would have combined the teachings of the references, and detailing the reasonable expectation of success underpinning such combinations. SAMSUNG-1003, ¶¶111-165, 175-183, 187-193, 211-212. Dr. McDaniel's robust testimony is confirmed and corroborated by approximately 40 corroborating references. *See generally* SAMSUNG-1003, ¶18.

In summary, the Petition advances strong and meritorious grounds that are

supported by Dr. McDaniel's testimony, which provides detailed context and explanations for the presented grounds and which are supported by numerous corroborating references—an overwhelming majority of which Headwater does not contest or take issue with.

5. Settled expectations of the parties, such as the length of time the claims have been in force

While the '429 patent claims priority to an application filed in January 2009, this patent issued a little over two-and-a-half years ago (August 2022). Further, the '429 patent issued without a substantive office action and has not been challenged either at the PTAB or in District Court (apart from in the current IPR and the co-pending litigation). Therefore, there are no "settled expectations" of the parties given the limited time the claims "have been in force." Indeed, the limited scrutiny encountered by the claims during prosecution and the short time that the claims have been in issuance strongly counsel against discretionary denial and in favor of a merits-based assessment to properly evaluate the quality of the '429 Patent.

6. Compelling economic, public health, or national security interests

Samsung is responsible for substantial and sustained investments and economic activity in the United States. For example, Samsung's investment in the US totals ***$47 billion*** since 1978 (SAMSUNG-1082), and Samsung proposes ***$191 billion*** in further investment, largely in Texas. SAMSUNG-1083. Further, "[s]ince

1996, Samsung Semiconductor has invested ***$18 billion*** in operating two fabs at its Austin, Texas, campus—making it ***one of the largest direct foreign investments in United States history***." SAMSUNG-1084 (emphasis added). Additionally, Samsung's investment is ongoing, with "President Trump Say[ing] Samsung Is Planning a 'Massive Investment' In The US." SAMSUNG-1085. Thus, Samsung's massive and ongoing investment presents a compelling economic interest, and Samsung's investment (e.g., in US-made semiconductors) supports the US's national security interests.

Such considerations weigh heavily against discretionary denial and Samsung respectfully requests an opportunity for the strong grounds presented in its diligently-filed petition to be considered at the PTAB. In this regard, Samsung seeks efficient resolution at the PTAB of the patentability of the challenged claims of yet another patent asserted against it by a highly-litigious and non-practicing entity that is actively pursuing multi-patent litigation campaigns against Samsung, and other entities. SAMSUNG-1086, 2-4 (over 5 different suits, Headwater has asserted 21 patents against Samsung); SAMSUNG-1086, 1-7 (Headwater has sued multiple other entities, including Verizon, T-Mobile, Google, and AT&T, over claims of infringement of over 70 patents).

III. CONCLUSION

For the foregoing reasons, a holistic evaluation of the *Fintiv* factors and the

additional considerations laid out in the Stewart Memorandum strongly weigh against discretionary denial. Petitioner therefore respectfully requests that this case proceed to an institution determination on the merits.

Respectfully submitted,

Dated May 28, 2025

/Karan Jhurani/

W. Karl Renner, Reg. No. 41,265
Jeremy J. Monaldo, Reg. No. 58,680
Karan Jhurani, Reg. No. 71,777
Fish & Richardson P.C.
60 South Sixth Street, Suite 3200
Minneapolis, MN 55402
T: 202-783-5070
F: 877-769-7945

Attorneys for Petitioner

CERTIFICATION UNDER 37 CFR §42.24

Under the provisions of 37 CFR § 42.24(d), the undersigned hereby certifies that the word count for the foregoing Petitioner's Opposition to Patent Owner's Discretionary Denial Brief totals 6,548 words, which is less than the 14,000 words allowed under 37 CFR § 42.24.

Respectfully submitted,

Dated May 28, 2025

/Karan Jhurani/

W. Karl Renner, Reg. No. 41,265
Jeremy J. Monaldo, Reg. No. 58,680
Karan Jhurani, Reg. No. 71,777
Fish & Richardson P.C.
60 South Sixth Street, Suite 3200
Minneapolis, MN 55402
T: 202-783-5070
F: 877-769-7945

Attorneys for Petitioner

CERTIFICATE OF SERVICE

Pursuant to 37 CFR §§ 42.6(e)(4) and 42.205(b), the undersigned certifies that on May 28, 2025, a complete and entire copy of this Petitioner's Opposition to Patent Owner's Request for Discretionary Denial of Institution and Accompanying Exhibits were provided by email to the Patent Owner by serving the correspondence email address of record as follows:

Reza Mirzaie
Marc A. Fenster
Dale Chang
James A. Milkey
Neil Rubin
Philip X. Wang
RUSS, AUGUST & KABAT 12424
Wilshire Blvd. 12th Floor
Los Angeles, CA 90025

Email: rak_headwater@raklaw.com

/Diana Bradley/

Diana Bradley
Fish & Richardson P.C.
60 South Sixth Street, Suite 3200
Minneapolis, MN 55402
bradley@fr.com