Omni MedSci, Inc. v. Apple Inc.
Case No. 2:18-cv-134-RWS (E.D. Tex.)

DEFENDANT'S INVALIDITY CONTENTIONS
August 28, 2018

EXHIBIT A

EXHIBIT A-1

U.S. Patent No. 9,651,533: Obviousness Combinations

To the extent any of the references Apple has charted against the asserted claims of U.S. Patent No. 9,651,533 ("the '533 Patent") do not disclose any of the limitations of those claims, each reference renders those claims obvious alone and/or in view of at least one or more of any of the following references:

- U.S. Patent No. 9,241,676 to Lisogurski et al. ("Lisogurski"). Lisogurski was filed on May 31, 2012, and issued on January 26, 2016. It is prior art under at least 35 U.S.C. §§ 102(a), (b), and (e) (pre-AIA) and 35 U.S.C. § 102(a), (b), (d) (post-AIA).
- U.S. Patent No. 8,172,761 to Rulkov et al. ("Rulkov"). Rulkov was filed on October 4, 2011 and issued on May 8, 2012. It is prior art under at least 35 U.S.C. §§ 102(a), (b), and (e) (pre-AIA) and 35 U.S.C. § 102(a), (b), (d) (post-AIA).
- U.S. Patent No. 7,648,463 to Elhag et al. ("Elhag"). Elhag issued on January 19, 2010. It is prior art under at least 35 U.S.C. §§ 102(a) and (b) (pre-AIA) and 35 U.S.C. § 102(a) and (b) (post-AIA).
- U.S. Patent No. 5,795,300 to Bryars ("Bryars"). Bryars issued on August 18, 1998, and is prior art under at least 35 U.S.C. §§ 102(a) and (b) (pre-AIA) and 35 U.S.C. § 102(a) and (b) (post-AIA).
- U.S. Patent No. 8,954,135 to Yuen et al. ("Yuen"). Yuen was filed on June 24, 2013, claims priority back to June 22, 2012, and issued on February 10, 2015. Yuen is prior art under at least 35 U.S.C. §§ 102(a) and (e) (pre-AIA) and 35 U.S.C. § 102(a) and (d) (post-AIA).
- U.S. Patent No. 6,731,967 to Turcott ("Turcott"). Turcott issued on May 4, 2004, and is prior art under 35 U.S.C. §§ 102(a) and (b) (pre-AIA) and 35 U.S.C. § 102(a) and (b) (post-AIA).
- U.S. Patent No. 8,755,871 to Weng et al. ("Weng"). Weng was filed November 30, 2011, and issued on June 17, 2014. It is prior art under 35 U.S.C. §§ 102(a), (b), and (e) (pre-AIA) and 35 U.S.C. § 102(a), (b), (d) (post-AIA).
- U.S. Patent No. 8,315,682 to Such et al. ("Such"). Such was filed on December 5, 2005, and issued on November 20, 2012. It is prior art under 35 U.S.C. §§ 102(a), (b), and (e) (pre-AIA) and 35 U.S.C. § 102(a), (b), (d) (post-AIA).
- U.S. Patent No. 6,708,048 to Chance ("Chance"). Chance issued on March 16, 2004, and is prior art under 35 U.S.C. §§ 102(a) and (b) (pre-AIA) and 35 U.S.C. § 102(a) and (b) (post-AIA).
- U.S. Patent No. 6,701,170 to Stetson ("Stetson"). Stetson issued on March 2, 2004, and is prior art under 35 U.S.C. §§ 102(a) and (b) (pre-AIA) and 35 U.S.C. § 102(a) and (b) (post-AIA).
- U.S. Patent No. 9,179,876 to Ochs et al. ("Ochs"). Ochs was filed on April 30, 2012, and issued on November 10, 2015. Ochs is prior art under 35 U.S.C. §§ 102(a), (b), and (e) (pre-AIA) and 35 U.S.C. § 102(a), (b), (d) (post-AIA).
- U.S. Patent No. 6,031,603 to Fine et al. ("Fine"). Fine issued on February 29, 2000, and is prior art under 35 U.S.C. §§ 102(a) and (b) (pre-AIA) and 35 U.S.C. § 102(a) and (b) (post-AIA).

- U.S. Patent No. 5,368,224 to Richardson et al. ("Richardson"). Richardson issued on November 29, 1994, and is prior art under 35 U.S.C. §§ 102(a) and (b) (pre-AIA) and 35 U.S.C. § 102(a) and (b) (post-AIA).
- U.S. Patent No. 5,746,206 to Mannheimer ("Mannheimer"). Mannheimer issued on May 5, 1998 and is prior art under 35 U.S.C. §§ 102(a) and (b) (pre-AIA) and 35 U.S.C. § 102(a) and (b) (post-AIA).
- U.S. Appl. Pub. No. 2005/0049468 to Carlson et al. ("Carlson"). Carlson was published on March 3, 2005, and is prior art under 35 U.S.C. §§ 102(a) and (b) (pre-AIA) and 35 U.S.C. § 102(a) and (b) (post-AIA).
- U.S. Appl. Pub. No. 2005/0209516 to Fraden ("Fraden"). Fraden was published on September 22, 2005, and is prior art under 35 U.S.C. §§ 102(a) and (b) (pre-AIA) and 35 U.S.C. § 102(a) and (b) (post-AIA).
- JP Appl. No. 2005270544 to Maekawa et al. ("Maekawa"). Maekawa was published on October 6, 2005, and is prior art under 35 U.S.C. §§ 102(a) and (b) (pre-AIA) and 35 U.S.C. § 102(a) and (b) (post-AIA).
- A Wearable Reflectance Pulse Oximeter for Remote Physiological Monitoring by Y. Mendelson ("Mendelson"). Mendelson was published in the Proceedings of the 28th IEEE EMBS Annual International Conference in 2006. It is prior art under 35 U.S.C. §§ 102(a) and (b) (pre-AIA) and 35 U.S.C. § 102(a) and (b) (post-AIA).
- A wireless reflectance pulse oximeter with digital baseline control for unfiltered photoplethysmograms by K. Li & S. Warren ("Li"). Li was published in 2012 in IEEE Transactions on Biomedical Circuits and Systems, 6(3), 269-278. It is prior art under 35 U.S.C. §§ 102(a) and (b) (pre-AIA) and 35 U.S.C. § 102(a) and (b) (post-AIA).
- Design of Pulse Oximeters by Webster ("Webster"). Webster was published by Institute of Physics Publishing in 1997. It is prior art under 35 U.S.C. §§ 102(a) and (b) (pre-AIA) and 35 U.S.C. § 102(a) and (b) (post-AIA).
- "Mobile monitoring with wearable photoplethysmographic biosensors" by Asada et al. ("Asada 2003"). Asada 2003 was published in IEEE Engineering in Medicine and Biology Magazine in May/June 2003. It is prior art under 35 U.S.C. §§ 102(a) and (b) (pre-AIA) and 35 U.S.C. § 102(a) and (b) (post-AIA).
- Rhee et al., Artifact-Resistant Power-Efficient Design of Finger-Ring Plethsymographic Sensors," IEEE Transactions on Biomedical Engineering, Vol. 48, No. 7 (July 2001) ("Asada 2001"). Asada 2001 was published in IEEE Transactions on Biomedical Engineering in July 2001. It is prior art under 35 U.S.C. §§ 102(a) and (b) (pre-AIA) and 35 U.S.C. § 102(a) and (b) (post-AIA).
- Asada, The MIT Ring: History, Technology, and Challenges of Wearable Health Monitoring, MIT Industrial Liaison Program 2010 R&D Conference ("Asada 2010"). Asada 2010 was published and/or publicly presented at least as early as November 16, 2010 at the MIT Industrial Liaison Program 2010 R&D Conference. It is prior art under 35 U.S.C. §§ 102(a) and (b) (pre-AIA) and 35 U.S.C. § 102(a) and (b) (post-AIA).
- TAOS TSL260 Datasheet and TSL260 & TSL261 products ("TAOS"). It is prior art under 35 U.S.C. §§ 102(a) and (b) (pre-AIA) and 35 U.S.C. § 102(a) and (b) (post-AIA).
- The Root, Radius-7, Radical-7, Radical-8, and certain pulse oximeters and pulse oximetry sensors manufactured by Masimo ("Masimo"). It is prior art under 35 U.S.C. §§ 102(a) and (b) (pre-AIA) and 35 U.S.C. § 102(a) and (b) (post-AIA).

- The iSpO2 pulse oximeter manufactured by Masimo ("Masimo iSpO2"). It is prior art under 35 U.S.C. §§ 102(a) and (b) (pre-AIA) and 35 U.S.C. § 102(a) and (b) (post-AIA).
- The WristOx pulse oximeter and certain pulse oximeters and pulse oximetry sensors manufactured by Nonin Medical ("Nonin Medical"). It is prior art under 35 U.S.C. §§ 102(a) and (b) (pre-AIA) and 35 U.S.C. § 102(a) and (b) (post-AIA).
- The OxiMax, NPB-40, N-550, and certain pulse oximeters and pulse oximetry sensors manufactured by Nellcor ("Nellcor"). It is prior art under 35 U.S.C. §§ 102(a) and (b) (pre-AIA) and 35 U.S.C. § 102(a) and (b) (post-AIA).
- The FitBit One manufactured by FitBit ("FitBit One"). It is prior art under 35 U.S.C. §§ 102(a) and (b) (pre-AIA) and 35 U.S.C. § 102(a) and (b) (post-AIA).
- The FitBit Charge HR manufactured by FitBit ("FitBit Charge HR"). It is prior art under 35 U.S.C. §§ 102(a) and (b) (pre-AIA) and 35 U.S.C. § 102(a) and (b) (post-AIA).
- The Adidas miCoach Smart Run GPS watch and other heart rate monitors manufactured by Adidas ("Adidas"). They are prior art under 35 U.S.C. §§ 102(a) and (b) (pre-AIA) and 35 U.S.C. § 102(a) and (b) (post-AIA).

Apple has separately charted most of the above references against the asserted claims, and the exemplary passages of each reference appear in that reference's claim chart. For any references not separately charted, exemplary passages appear in the chart below.

For each dependent claim, the disclosures cited for the claim from which it depends are incorporated by reference. For each combination identified below, exemplary rationales to combine are set forth, and additional reasons why a person of ordinary skill in the art would have made that combination are identified in Section I.B of Apple's Invalidity Contentions.

CHART ONE: U.S. Patent No. 9,651,533 Obviousness Combinations

Asserted Claim of ’533 Patent	Combinations
[5] A measurement system, comprising:	To the extent the preamble is limiting and is not disclosed by any primary reference, it would have been obvious in view of any of the references identified in the list of references above that Apple has separately charted against the claims. One of ordinary skill in the art would have been motivated to combine each primary reference with each of these references for one or more of the reasons outlined in Section I.B of Defendant’s Invalidity Contentions.
[5A] a light source comprising a plurality of semiconductor sources that are light emitting diodes, the light emitting diodes configured to generate an output optical beam with one or more optical wavelengths,	*See* CHART ONE: ’533 Patent, Claim Element 13A below.
[5B] wherein at least a portion of the one or more optical wavelengths is a near-infrared wavelength between 700 nanometers and 2500 nanometers,	To the extent this limitation is not disclosed by any primary reference, it would have been obvious in view of at least Lisogurski, Carlson, Rulkov, Weng, Mendelson, Fine, Ochs, Webster, Nonin Medical, Masimo, and Masimo iSpO$_2$. Apple has separately charted each reference against the claims. A person of ordinary skill in the art would have found it obvious to configure a device to use an LED in the “near-infrared wavelength between 700 nanometers and 2500 nanometers” because this was commonly done at the time. Use of an IR LED in that range of wavelengths was well-known to those in the art and it had well-known benefits. It would have been a matter of routine for one skilled in the art to have selected one or more LEDs of an appropriate wavelength and to have incorporated them into a device, and doing so was well within the skill of those in the art. In addition, certain references teach using an LED that emits light in the infrared spectrum but do not explicitly specify a wavelength. *E.g.*, Yuen, 10:34-42. The skilled person would have found it obvious to select an IR LED that emitted light in a wavelength range between 700 nm and 2500nm, as this is taught by at least Lisogurski, Carlson, Rulkov, Weng, Mendelson, Fine, Ochs, Webster, Nonin Medical, Masimo, and Masimo iSpO$_2$. In addition, one of ordinary skill in the art

Asserted Claim of ’533 Patent	Combinations
	would have been motivated to combine each primary reference with each of these references for one or more of the reasons outlined in Section I.B of Defendant’s Invalidity Contentions.
[5C] the light source configured to increase signal-to-noise ratio by increasing a light intensity from at least one of the plurality of semiconductor sources and by increasing a pulse rate of at least one of the plurality of semiconductor sources;	To the extent this limitation is not disclosed by any primary reference, it would have been obvious in view of at least Lisogurski, Carlson, Elhag, Turcott, Richardson, Rulkov, Webster, Nonin Medical, Masimo, and Masimo iSpO2. Apple has separately charted each reference against the claims. A person of ordinary skill in the art would have found it obvious to configure a device to incorporate additional techniques for increasing the signal-to-noise ratio. As shown in the claim charts for the primary references, the art teaches that it is advantageous to improve the signal-to-noise ratio as this increases the accuracy of the device. The teachings of these references are consistent with the knowledge of a person of ordinary skill in the art, who would have understood that various known techniques for improving signal-to-noise ratio could be substituted into a device or could be added into the device to complement the techniques already being used. It would have been a matter of routine for one skilled in the art to have changed or supplemented the noise reduction technique in a device, and doing so was well within the skill of those in the art. In addition, one of ordinary skill in the art would have been motivated to combine each primary reference with each of these references for one or more of the reasons outlined in Section I.B of Defendant’s Invalidity Contentions.
[5D] an apparatus comprising a plurality of lenses configured to receive a portion of the output optical beam and to deliver an analysis output beam to a sample	To the extent this limitation is not disclosed by any primary reference, it would have been obvious in view of at least Carlson, Elhag, Turcott, Rulkov, Yuen, Webster, and Bryars. Apple has separately charted each reference against the claims. This limitation also would have been obvious in view of TAOS TSL260 Datasheet (“TAOS”). Exemplary passages from TAOS are set forth below. A person of ordinary skill in the art would have found it obvious to configure a device to include a lens to deliver an optical beam to a sample or tissue. Use of such lens was routine, as shown by at least Carlson, Elhag, Turcott, Rulkov, Yuen, Bryars, Webster, and TAOS and it had known benefits. For example, use of a lens could increase the signal-to-noise ratio, focus the optical beam on a particular portion of a sample or tissue, or provide an efficient means for combining light from multiple LED sources. Lens commonly were included in off-the-shelf LEDs and

Asserted Claim of ’533 Patent	Combinations
	optical sensors. In addition, one of ordinary skill in the art would have been motivated to combine each primary reference with each of these references for one or more of the reasons outlined in Section I.B of Defendant’s Invalidity Contentions. <u>TAOS</u> “The TSL260R, TSL261R, and TSL262R are infrared light-to-voltage optical sensors, each combining a photodiode and a transimpedance amplifier (feedback resistor = 16 MW, 8 MW, and 2.8 MW respectively) on a single monolithic IC. Output voltage is directly proportional to the light intensity (irradiance) on the photodiode. These devices have improved amplifier offset-voltage stability and low power consumption and are supplied in a 3-lead plastic sidelooker package with an integral visible light cutoff filter and lens. When supplied in the lead (Pb) free package, the device is RoHS compliant.” TAOS, 1. PARAMETER MEASUREMENT INFORMATION 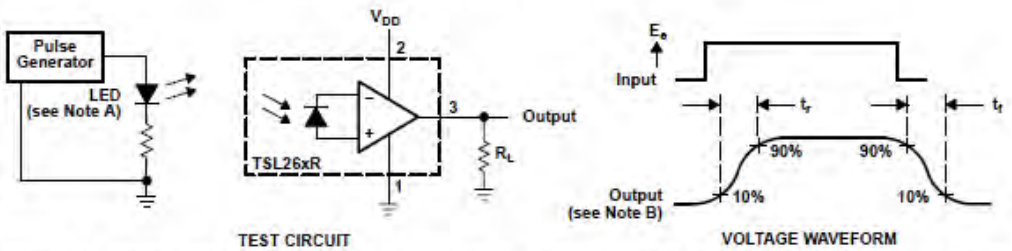 NOTES: A. The input irradiance is supplied by a pulsed GaAs light-emitting diode with the following characteristics: λ_p = 940 nm, t_r < 1 µs, t_f < 1 µs. B. The output waveform is monitored on an oscilloscope with the following characteristics: t_r < 100 ns, Z_i ≥ 1 MΩ, C_i ≤ 20 pF. Figure 1. Switching Times TAOS, 4. “The TSL260R, TSL261R, and TSL262R are supplied in a clear 3-lead through-hole package with a molded lens. The integrated photodiode active area is typically 1,0 mm2 (0.0016 in2) for TSL260R, 0,5 mm2 (0.00078 in2) for the TSL261R, and 0,26 mm2 (0.0004 in2) for the TSL262R.” TAOS, 10.

Asserted Claim of ’533 Patent	Combinations
	PACKAGE S PLASTIC SINGLE-IN-LINE SIDE-LOOKER PACKAGE 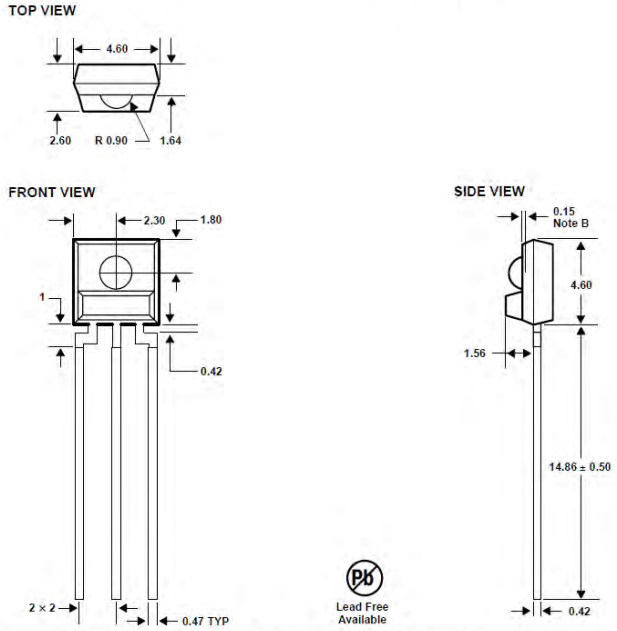 NOTES: A. All linear dimensions are in millimeters; tolerance is ± 0.25 mm unless otherwise stated. B. Dimension is to center of lens arc, which is located below the package face. C. The integrated photodiode active area is typically located in the center of the lens and 0.97 mm below the top of the lens surface. D. Index of refraction of clear plastic is 1.55. E. Lead finish for TSL26xR: solder dipped, 63% Sn/37% Pb. Lead finish for TSL26xR−LF: solder dipped, 100% Sn. F. This drawing is subject to change without notice. **Figure 13. Package S — Single-In-Line Side-Looker Package Configuration** TAOS, 10.

Asserted Claim of ’533 Patent	Combinations
	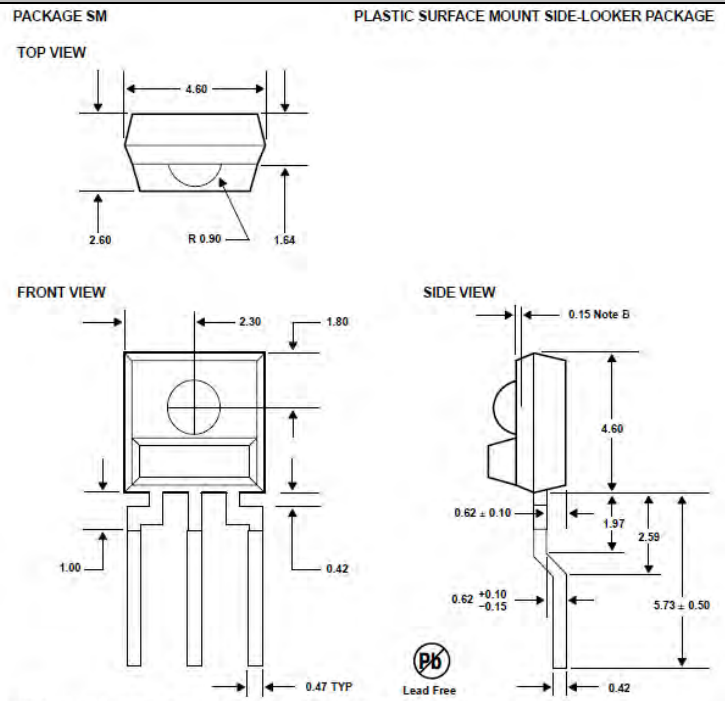 TAOS, 11.
[5E] a receiver configured to receive and process at least a portion of the analysis output beam reflected or transmitted from the sample and to generate an output signal,	To the extent this limitation is not disclosed by any primary reference, it would have been obvious in view of any of the references identified in the list of references above that Apple has separately charted against the claims. One of ordinary skill in the art would have been motivated to combine each primary reference with each of these references for one or more of the reasons outlined in Section I.B of Defendant’s Invalidity Contentions.

Asserted Claim of ’533 Patent	Combinations
[5F] wherein the receiver is configured to be synchronized to the light source;	To the extent this limitation is not disclosed by any primary reference, it would have been obvious in view of at least Lisogurski, Carlson, Elhag, Turcott, Rulkov, Webster, Nonin Medical, Masimo, and Masimo iSpO2. Apple has separately charted each reference against the claims. A person of ordinary skill in the art would have found it obvious to configure a device to include a receiver synchronized to a light source. Synchronizing the receiver to the light source allows the receiver to take any parameters of the signal into account when processing the detected signal. For example, synchronization could allow the receiver to take into account the modulation, intensity, modulation frequency, pulse width, wavelength, and whether the light source was on or off. It also could allow the receiver to filter out noise or other signals that occur at different frequencies. A person of ordinary skill in the art would have understood that it was common practice to use a receiver that is synchronized with a light source, and this is taught by at least Lisogurski, Carlson, Elhag, Turcott, Rulkov, Webster, Nonin Medical, Masimo, and Masimo iSpO2. It would have been a matter of routine for one skilled in the art to have included a receiver synchronized to a light source, and doing so was well within the skill of those in the art. In addition, one of ordinary skill in the art would have been motivated to combine each primary reference with each of these references for one or more of the reasons outlined in Section I.B of Defendant’s Invalidity Contentions.
[5G] a personal device comprising a wireless receiver, a wireless transmitter, a display, a microphone, a speaker, one or more buttons or knobs, a microprocessor and a touch screen,	To the extent this limitation is not disclosed by any primary reference, it would have been obvious in view of at least Lisogurski, Elhag, Yuen, Rulkov, Asada 2003, Nonin Medical, Masimo, Masimo iSpO2, FitBit One, FitBit Charge HR, Adidas, and Nellcor. Apple has separately charted each reference against the claims. A person of ordinary skill in the art would have found it obvious to configure a measurement system to include a personal device that comprised wireless receiver, a wireless transmitter, a display, a microphone, a speaker, one or more buttons or knobs, a microprocessor and a touch screen. At the time of alleged invention, personal devices such as personal computers, personal digital assistants, iPhones, smart phones, and tablet computers were well-known in the art, and it was well-known that such devices could include a wireless receiver, a wireless transmitter, a display, a microphone, a speaker, one or more buttons or knobs, a microprocessor and a touch screen. It also was well-known that sensors and monitors could be integrated with or communicate with personal devices. This configuration is shown in many references, for example

Asserted Claim of ’533 Patent	Combinations
	in Lisogurski, Elhag, Yuen, Rulkov, Asada 2003, Nonin Medical, Masimo, Masimo iSpO2, FitBit One, FitBit Charge HR, Adidas, and Nellcor. The skilled person would have understood the benefits of this configuration, which include allowing ready access to the data collected by the sensor by patients and medical personnel, providing a method for configuring the monitor or sensor, and enabling integration with other medical systems or systems for data storage and aggregation. The skilled person also would have understood that the personal device could store the data collected by a sensor or monitor or transmit the data to another device (e.g., a server) for storage, and this configuration was common at the time of alleged invention. The personal device also could perform data processing because e.g., it had a faster processor or a larger power supply (e.g., it is plugged into the wall instead of being battery powered). It would have been a matter of routine for one skilled in the art to configure a measurement system to include a personal device, and doing so was well within the skill of those in the art. In addition, one of ordinary skill in the art would have been motivated to combine each primary reference with each of these references for one or more of the reasons outlined in Section I.B of Defendant’s Invalidity Contentions.
[5H] the personal device configured to receive and process at least a portion of the output signal,	*See* CHART ONE: ’533 Patent, Claim Element [5G] above.
[5I] wherein the personal device is configured to store and display the processed output signal,	*See* CHART ONE: ’533 Patent, Claim Element [5G] above.
[5J] and wherein at least a portion of the processed output signal is configured to be transmitted over a wireless transmission link; and	*See* CHART ONE: ’533 Patent, Claim Element [5G] above.
[5K] a remote device configured to receive over the wireless transmission link an output status comprising the at least a portion	To the extent this limitation is not disclosed by any primary reference, it would have been obvious in view of at least Lisogurski, Elhag, Yuen, Rulkov, Asada 2003, Asada 2010, Mendelson,

Asserted Claim of ’533 Patent	Combinations
of the processed output signal, to process the received output status to generate processed data and to store the processed data.	Masimo, Masimo iSpO$_2$, FitBit One, FitBit Charge HR, Adidas, and Nellcor. Apple has separately charted each reference against the claims. A person of ordinary skill in the art would have found it obvious to configure a measurement system to include a personal device that could transmit processed data to a remote device that could process and store data. It was well-known that sensors and monitors could be integrated with or communicate with personal devices, and that those personal devices could communicate with remote devices such as servers, websites, and central monitoring stations. This configuration is shown in many references, for example in Lisogurski, Elhag, Yuen, Rulkov, Asada 2003, Asada 2010, Mendelson, Masimo, Masimo iSpO$_2$, FitBit One, FitBit Charge HR, Adidas, and Nellcor. The skilled person would have understood the benefits of this configuration, which include enabling integration with other medical systems or systems for data storage and aggregation, providing for additional storage and processing of data, and allowing better distribution of data to multiple parties or sources. This configuration was common at the time of alleged invention. The remote device also could perform data processing because e.g., it had a faster processor or a larger power supply (e.g., it is plugged into the wall instead of being battery powered). It would have been a matter of routine for one skilled in the art to configure a measurement system to include a personal device that could transmit processed data to a remote device that could process and store data, and doing so was well within the skill of those in the art. In addition, one of ordinary skill in the art would have been motivated to combine each primary reference with each of these references for one or more of the reasons outlined in Section I.B of Defendant’s Invalidity Contentions.
[7] The system of claim 5, wherein the remote device is further configured to transmit at least a portion of the processed data to one or more other locations, wherein the one or more other locations is selected from the group consisting of the personal device, a doctor, a	To the extent this limitation is not disclosed by any primary reference, it would have been obvious in view of at least Yuen, Carlson, Rulkov, Asada 2003, Asada 2010, Mendelson, Masimo, Masimo iSpO$_2$, FitBit One, FitBit Charge HR, Adidas, and Nellcor. Apple has separately charted each reference against the claims. As explained above for element [5K], a person of ordinary skill in the art would have found it obvious to configure a measurement system to include a personal device that could transmit processed data to a remote device. The skilled person also would have found it obvious to configure a measurement system to include a remote device that transmits processed data to another location, such as the personal device, a doctor, a healthcare provider, a cloud-based server

Asserted Claim of ’533 Patent	Combinations
healthcare provider, a cloud-based server and one or more designated recipients, and wherein the remote device is capable of transmitting information related to a time and a position associated with the at least a portion of the processed data.	and one or more designated recipients, and wherein the remote device is capable of transmitting information related to a time and a position associated with the at least a portion of the processed data. It was well-known that data could be transferred back to a personal device, such as to download historical data. It also was well-known that data could be further transmitted to a webserver or a central monitoring device to allow data to be more easily accessed by doctors or by the patient/subject. These configurations are taught by at least Yuen, Rulkov, Asada 2003, Asada 2010, Mendelson, Masimo, Masimo iSpO$_2$, FitBit One, FitBit Charge HR, Adidas, and Nellcor. Further, those in the art knew that it was common to include information relating to a time and a position associated with data (*e.g.*, the time at which the data were collect and the patient/subject’s physical location or GPS coordinates), and this is taught by at least Yuen, Carlson, Asada 2003, Asada 2010, Mendelson, and Rulkov. These references teach collecting GPS data, or other information related to user location, and the skilled person would have found it obvious to configure a device to store that information along with the processed data. It was well-known in the art that this configuration provided benefits, such as by allowing a better history to be stored and allowing the location where particular data were created to be tracked. It would have been a matter of routine for one skilled in the art to have a remote device that could further transmit certain types of data to other devices, and doing so was well within the skill of those in the art. In addition, one of ordinary skill in the art would have been motivated to combine each primary reference with each of these references for one or more of the reasons outlined in Section I.B of Defendant’s Invalidity Contentions.
[8] The system of claim 5, wherein the receiver is located a first distance from a first one of the plurality of light emitting diodes and a different, second distance from a second one of the plurality of light emitting diodes such that the receiver receives a first signal from the first light emitting diode and a second	To the extent this limitation is not disclosed by any primary reference, it would have been obvious in view of at least Fraden, Yuen, Rulkov, Elhag, Turcott, Ochs, Lisogurski, Nellcor, Asada 2003, Masimo, and Masimo iSpO$_2$. Apple has separately charted each reference against the claims. This limitation also would have been obvious in view of Mannheimer. Exemplary passages from Mannheimer are set forth below. A person of ordinary skill in the art would have found it obvious to configure a device to include a first and a second LED where each LED was a different distance from a receiver. This configuration was well-known in the art, and is taught by at least Fraden, Yuen, Rulkov, Elhag, Turcott, Ochs, Lisogurski, Nellcor, Asada 2003, Masimo, and Masimo iSpO$_2$. It was well-known to those in the art that this configuration provided benefits, including by allowing selection of

Asserted Claim of ’533 Patent	Combinations
signal from the second light emitting diode.	different LEDs for different placements on a user’s body, correction of different noise sources, selection of different LEDs depending on the type of noise detected in the signal, allowing multiple measurement points, and increasing sensor accuracy. It would have been a matter of routine for one skilled in the art to have included a first and a second LED where each LED was a different distance from a receiver, and doing so was well within the skill of those in the art. In addition, one of ordinary skill in the art would have been motivated to combine each primary reference with each of these references for one or more of the reasons outlined in Section I.B of Defendant’s Invalidity Contentions. Mannheimer 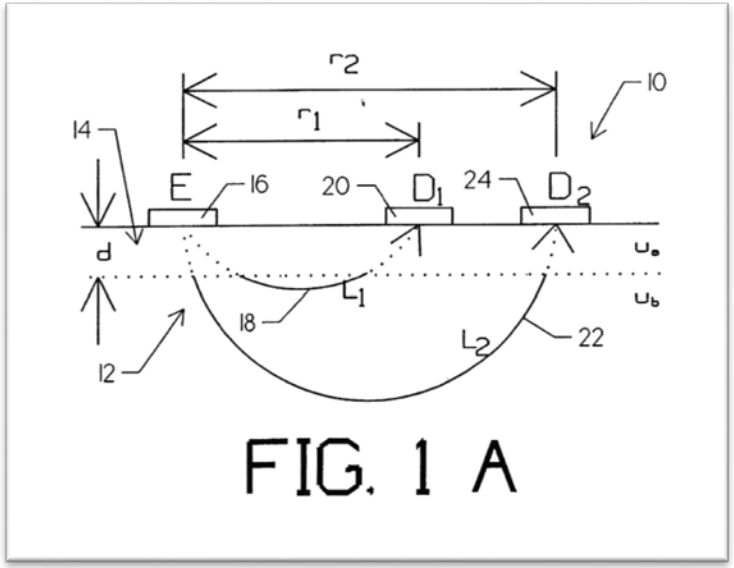

Asserted Claim of ’533 Patent	Combinations
	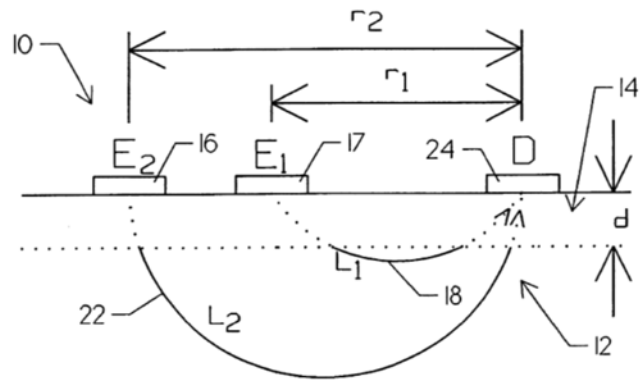 FIG. 1 B

Asserted Claim of ’533 Patent	Combinations
	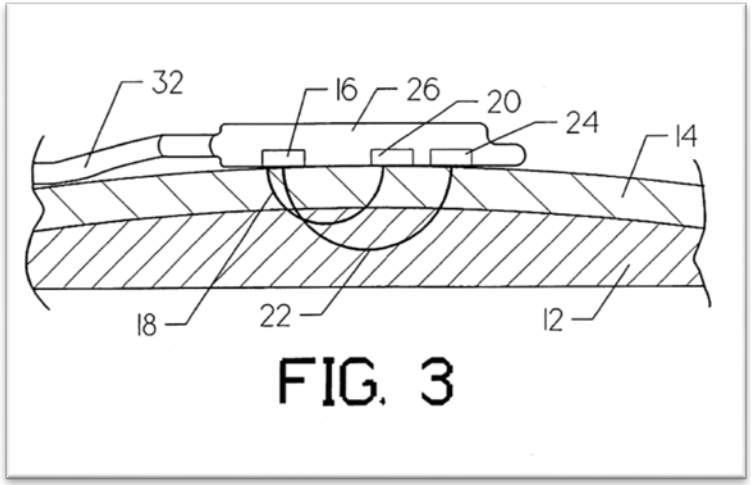 FIG. 3 “The present invention overcomes the disadvantages found in the prior art by providing a pulse oximetry system for the determination of arterial blood oxygen saturation level at a particular depth of tissue which readily compensates for limitations induced in the prior art systems. Specifically, the present invention allows for pulsed oximetry measurement which isolates arterial saturation levels for particular ranges of tissue layers which rejects saturation levels of the tissue above or below the tissue of interest by utilizing multiple spaced detectors and/or emitters. According to one embodiment of the invention, a sensor for use with a pulse oximeter monitor comprises a patient interface housing for coupling to a patient; at least three sensor areas for emitting electromagnetic radiation which penetrates tissue of the patient and detects that electromagnetic radiation scattered by the tissue, a spacing between a first pair of electromagnetic emitter and electromagnetic detector being different than that of a spacing between a second pair of electromagnetic emitter and electromagnetic detector; and means for calculating an arterial oxygen saturation level of the patient in response to the detected electromagnetic radiation. According to two preferred embodiments, the sensor areas comprise first and second separated and spaced apart emitter areas each capable of generating light of at least two distinct wavelengths,

Asserted Claim of ’533 Patent	Combinations
	and a detector, the first emitter area and the detector corresponding to a first pair of emitter and detector, the second emitter area and the detector corresponding to the second pair of emitter and detector; or the sensor areas comprise first and second detector areas each capable of detecting light of at least two separate wavelength values, and an emitter area capable of generating said light having the at least two separated wavelength values.” Mannheimer, Col. 1:64-2:30. “According to a first preferred embodiment, emitter 16 transmits electromagnetic radiation in the visible and near infrared region at two predetermined wavelengths (e.g. 660 nm and 905 nm). Emitter 16 is shown as a single entity in this example. However, different emitters may be used for the different predetermined wavelengths, if desired. If more than one emitter is used, it is most convenient that they be co-located to simulate a single point source. LED's are a preferred type of emitter. The signals from emitter 16 travel generally along path 18 to a first detector 20 and along path 22 to a second detector 24 as shown. The length of path 18 within layer 12 (with absorption u_b) is shown as L_1 and the length of path 22 within layer 12 is shown as L_2. Detector 20 is spaced a distance of r_1 from emitter 16 and detector 24 is spaced at a distance of r_2. As can be seen in the drawing, both path 18 and path 22 traverse skin layer 14 twice. Furthermore, because paths 18 and 22 traverse skin layer 14 using approximately the same angle, the primary difference between paths 22 and 18 is the difference between length L_2 and length L_1 traversing subdermal layer 12, which is the tissue layer of interest. Therefore, it can be assumed that the difference in absorption between path L_2 and path L_1 is directly attributable to subdermal layer 12, the tissue layer of interest, corresponding to the different spacings r_2 and r_1. The path length through skin layer 12 may be represented by l and the deeper path through the subdermal tissue by L_1 and L_2, depending on which detector is considered. Note that multiple emitters may transmit to a single detector as discussed below in relation to FIG. 1B. Following the formalism of Beer's Law, the signal detected at D_1 20 is given by:

Asserted Claim of ’533 Patent	Combinations
	$I_1 = I_o \exp(-u_a l).\exp(-u_b L_1).\exp(-u_a l)$ (1) which describes the attenuation of the signal traveling twice through the skin layer **14** and once through the subdermal tissue **12** where: I_1=the detected light intensity at D_1 I_o=the emitted light intensity of emitter E u_a=the characteristic absorption of layer **14** u_b=the characteristic absorption of layer **12** l=the path length through layer **14** L_1=the path length through layer **12** Mannheimer, Col. 3, 10-54. See also, Mannheimer, Col. 3:54-56.
[9] The system of claim 8, wherein the output signal is generated in part by comparing the first and second signals	To the extent this limitation is not disclosed by any primary reference, it would have been obvious in view of at least Fraden, Yuen, Rulkov, Elhag, Turcott, Ochs, Lisogurski, Nellcor, Asada 2003, Webster, Masimo, and Masimo iSpO2. Apple has separately charted each reference against the claims. This limitation also would have been obvious in view of Mannheimer. Exemplary passages from Mannheimer are set forth below. A person of ordinary skill in the art would have found it obvious to configure a device to compare the first and second signals. It was well-known to those in the art that this configuration provided benefits, including by allowing selection of different LEDs for different placements on a user’s body, correction of different noise sources, selection of different LEDs depending on the type of noise detected in the signal, allowing multiple measurement points, and increasing sensor accuracy. It would have been a matter of routine for one skilled in the art to have compared the first and second signals, and doing so was well within the skill of those in the art. In addition, one of ordinary skill in the art would have been motivated to combine each primary reference with each of these references for one or more of the reasons outlined in Section I.B of Defendant’s Invalidity Contentions.

Asserted Claim of ’533 Patent	Combinations
	Mannheimer “The present invention overcomes the disadvantages found in the prior art by providing a pulse oximetry system for the determination of arterial blood oxygen saturation level at a particular depth of tissue which readily compensates for limitations induced in the prior art systems. Specifically, the present invention allows for pulsed oximetry measurement which isolates arterial saturation levels for particular ranges of tissue layers which rejects saturation levels of the tissue above or below the tissue of interest by utilizing multiple spaced detectors and/or emitters. According to one embodiment of the invention, a sensor for use with a pulse oximeter monitor comprises a patient interface housing for coupling to a patient; at least three sensor areas for emitting electromagnetic radiation which penetrates tissue of the patient and detects that electromagnetic radiation scattered by the tissue, a spacing between a first pair of electromagnetic emitter and electromagnetic detector being different than that of a spacing between a second pair of electromagnetic emitter and electromagnetic detector; and means for calculating an arterial oxygen saturation level of the patient in response to the detected electromagnetic radiation. According to two preferred embodiments, the sensor areas comprise first and second separated and spaced apart emitter areas each capable of generating light of at least two distinct wavelengths, and a detector, the first emitter area and the detector corresponding to a first pair of emitter and detector, the second emitter area and the detector corresponding to the second pair of emitter and detector; or the sensor areas comprise first and second detector areas each capable of detecting light of at least two separate wavelength values, and an emitter area capable of generating said light having the at least two separated wavelength values.” Mannheimer, Col. 1:64-2:30. “According to a first preferred embodiment, emitter 16 transmits electromagnetic radiation in the visible and near infrared region at two predetermined wavelengths (e.g. 660 nm and 905 nm). Emitter 16 is shown as a single entity in this example. However, different emitters may be used for the different predetermined wavelengths, if desired. If more than one emitter is used, it is most convenient that they be co-located to simulate a single point source. LED's are a preferred type of emitter. The signals from emitter 16 travel generally along path 18 to a first detector 20 and along path 22 to a second detector 24 as shown. The length of path 18 within layer 12 (with absorption

Asserted Claim of ’533 Patent	Combinations
	u_b) is shown as L_1 and the length of path 22 within layer 12 is shown as L_2. Detector 20 is spaced a distance of r_1 from emitter 16 and detector 24 is spaced at a distance of r_2. As can be seen in the drawing, both path 18 and path 22 traverse skin layer 14 twice. Furthermore, because paths 18 and 22 traverse skin layer 14 using approximately the same angle, the primary difference between paths 22 and 18 is the difference between length L_2 and length L_1 traversing subdermal layer 12, which is the tissue layer of interest. Therefore, it can be assumed that the difference in absorption between path L_2 and path L_1 is directly attributable to subdermal layer 12, the tissue layer of interest, corresponding to the different spacings r_2 and r_1. The path length through skin layer 12 may be represented by l and the deeper path through the subdermal tissue by L_1 and L_2, depending on which detector is considered. Note that multiple emitters may transmit to a single detector as discussed below in relation to FIG. 1B. Following the formalism of Beer's Law, the signal detected at D_1 20 is given by: $I_1=I_o\exp(-u_a l).\exp(-u_b L_1).\exp(-u_a l)$ (1) **which describes the attenuation of the signal traveling twice through the skin layer 14 and once through the subdermal tissue 12 where:** **I_1=the detected light intensity at D_1** **I_o=the emitted light intensity of emitter E** **u_a=the characteristic absorption of layer 14** **u_b=the characteristic absorption of layer 12** **l=the path length through layer 14** **L_1=the path length through layer 12** Mannheimer, Col. 3, 10-54. See also, Mannheimer, Col. 3:54-56.

FIG. **4** is a block diagram showing the entire monitoring and measurement system employing the present invention. According to a first preferred embodiment, multiplexer **36** and two wavelength driver **34** alternately turn on the red and infrared LED's **16** at a desired chop frequency (e.g. 1,600 hz). These red and infrared signals are detected by detectors **20** and **24** and amplified by current-to-voltage amplifiers **38** and **40**. The outputs of transconductance amplifiers **38** and **40** are demultiplexed by DMUX **42** so as to generate a first and second wavelength signal for each of detectors D_1 (**20**) and D_2 (**24**), which generated signals are sent through integrating amplfiers **49**, **51**, **53** and **55** to be placed on, respectively, lines **50**, **52**, **54** and **56**. These first and second wavelength signals are digitized by Analog/Digital Converter **46**. The digitized signals are transmitted to CPU **48** for calculating arterial oxygen saturation. A preferred architectural implementation of the control electronics is disclosed in PCT/US94/03546, the disclosure of which is incorporated herein by reference. Alternate control electronics are known in the art and could be used, if desired.

As previously described, if deep tissue properties are desired, CPU **48** calculates R using equation 8 and S_pO_2 using equation 11 with constants $\beta_{red,\lambda 2}$, $\beta_{red,\lambda 1}$, $\beta_{oxy,\lambda 1}$, and $\beta_{oxy,\lambda 2}$ being stored in CPU memory, having been previously determined empirically. If shallow tissue properties are desired, CPU **48** calculates R using equation 15 and S_pO_2 using equation 11.

According to a preferred embodiment, CPU **48** identifies and qualifies arterial pulses from the signals D_1, λ_1; D_1, λ_2; D_2, λ_1, D_2, λ_2 using any of the signal processing techniques described in U.S. Pat. Nos. 4,869,254; 5,078,136; 4,911,167; 4,934,372; 4,802,486; and 4,928,692, the disclosures of which are all incorporated herein by reference.

Asserted Claim of ’533 Patent	Combinations
	Mannheimer, Col. 6:17-50.
[10] The system of claim 5, wherein the output signal comprises one or more physiological parameters, and the remote device is capable of storing a history of at least a portion of the one or more physiological parameters over a specified period of time.	To the extent this limitation is not disclosed by any primary reference, it would have been obvious in view of at least Lisogurski, Elhag, Yuen, Rulkov, Asada 2003, Asada 2010, Mendelson, Masimo, Masimo iSpO$_2$, FitBit One, FitBit Charge HR, Adidas, and Nellcor. Apple has separately charted each reference against the claims. A person of ordinary skill in the art would have found it obvious to configure a measurement system to include a remote device that is capable of storing a history of at least a portion of the one or more physiological parameters over a specified period of time and wherein the output signal comprises one or more physiological parameters. It was well-known that remote devices could store historical data pertaining to physiological parameters, and that data could be transferred back to a personal device. The skilled person would have understood the benefits of this configuration, which include providing for additional storage and processing of historical data on the remote device, use of larger or cheaper data storage media on the remote device, and allowing better distribution of data to multiple parties or sources. This configuration was common at the time of the alleged invention. It would have been a matter of routine for one skilled in the art to have configured a measurement system in this manner, and doing so was well within the skill of those in the art. In addition, one of ordinary skill in the art would have been motivated to combine each primary reference with each of these references for one or more of the reasons outlined in Section I.B of Defendant’s Invalidity Contentions.
[13] A measurement system comprising	*See* CHART ONE: ’533 Patent, Claim Element 5 above.
[13A] a wearable measurement device for measuring one or more physiological parameters, including a light source comprising a plurality of semiconductor sources that are light emitting diodes, the light emitting diodes configured to	To the extent this limitation is not disclosed by any primary reference, it would have been obvious in view of at least Lisogurski, Elhag, Yuen, Rulkov, Asada 2003, Mendelson, Masimo, Masimo iSpO$_2$, Nonin Medical, FitBit One, FitBit Charge HR, Adidas, and Nellcor. Apple has separately charted each reference against the claims. A person of ordinary skill in the art would have found it obvious to configure a device to be wearable. At the time of alleged invention, wearable measurement devices were well-known in the art. This configuration is shown in many references, for example in Lisogurski, Elhag, Yuen,

Asserted Claim of ’533 Patent	Combinations
generate an output optical beam with one or more optical wavelengths,	Rulkov, Asada 2003, Mendelson, Masimo, Masimo iSpO2, Nonin Medical, FitBit One, FitBit Charge HR, Adidas, and Nellcor. The skilled person would have understood the benefits of this configuration, which include allowing a device to be small and lightweight, comfortable and easy to carry and use, able to be used for an extended period of time and while the user is in motion, and non-obtrusive. It would have been a matter of routine for one skilled in the art to have configured a device in this manner, and doing so was well within the skill of those in the art. In addition, one of ordinary skill in the art would have been motivated to combine each primary reference with each of these references for one or more of the reasons outlined in Section I.B of Defendant’s Invalidity Contentions.
[13B] wherein at least a portion of the one or more optical wavelengths is a near-infrared wavelength between 700 nanometers and 2500 nanometers,	*See* CHART ONE: ’533 Patent, Claim Element 5B above.
[13C] the light source configured to increase signal-to-noise ratio by increasing a light intensity from at least one of the plurality of semiconductor sources and by increasing a pulse rate of at least one of the plurality of semiconductor sources;	*See* CHART ONE: ’533 Patent, Claim Element 5C above.
[13D] the wearable measurement device comprising a plurality of lenses configured to receive a portion of the output optical beam and to deliver an analysis output beam to a sample;	*See* CHART ONE: ’533 Patent, Claim Element 5D above.

Asserted Claim of ’533 Patent	Combinations
[13E] the wearable measurement device further comprising a receiver configured to receive and process at least a portion of the analysis output beam reflected or transmitted from the sample and to generate an output signal	*See* CHART ONE: ’533 Patent, Claim Element 5E above.
[13F] wherein the wearable measurement device receiver is configured to be synchronized to pulses of the light source;	*See* CHART ONE: ’533 Patent, Claim Element 5F above.
[13G] a personal device comprising a wireless receiver, a wireless transmitter, a display, a microphone, a speaker, one or more buttons or knobs, a microprocessor and a touch screen,	*See* CHART ONE: ’533 Patent, Claim Element 5G above.
[13H] the personal device configured to receive and process at least a portion of the output signal,	*See* CHART ONE: ’533 Patent, Claim Element 5H above.
[13I] wherein the personal device is configured to store and display the processed output signal, and	*See* CHART ONE: ’533 Patent, Claim Element 5I above.
[13J] wherein at least a portion of the processed output signal is	*See* CHART ONE: ’533 Patent, Claim Element 5J above.

Asserted Claim of ’533 Patent	Combinations
configured to be transmitted over a wireless transmission link; and	
[13K] a remote device configured to receive over the wireless transmission link an output status comprising the at least a portion of the processed output signal, to process the received output status to generate processed data and to store the processed data, and	*See* CHART ONE: ’533 Patent, Claim Element 5K above.
[13L] wherein the remote device is capable of storing a history of at least a portion of the received output status over a specified period of time.	*See* CHART ONE: ’533 Patent, Claim Element 10 above.
[16] The system of claim 13, wherein the receiver is located a first distance from a first one of the plurality of light emitting diodes and a different, second distance from a second one of the plurality of light emitting diodes such that the receiver receives a first signal from the first light emitting diode and a second signal from the second light emitting diode.	*See* CHART ONE: ’533 Patent, Claim Element 8 above.
[17] The system of claim 16, wherein the output signal is	*See* CHART ONE: ’533 Patent, Claim Element 9 above.

Asserted Claim of ’533 Patent	Combinations
generated in part by comparing the first and second signals.	

EXHIBIT A-2

U.S. Patent No. 9,757,040: Obviousness Combinations

To the extent any of the references Apple has charted against the asserted claims of U.S. Patent No. 9,757,040 ("the '040 Patent") do not disclose any of the limitations of those claims, each reference renders those claims obvious alone and/or in view of at least one or more of any of the following references:

- U.S. Patent No. 9,241,676 to Lisogurski et al. ("Lisogurski"). Lisogurski was filed on May 31, 2012, and issued on January 26, 2016. It is prior art under at least 35 U.S.C. §§ 102(a), (b), and (e) (pre-AIA) and 35 U.S.C. § 102(a), (b), (d) (post-AIA).
- U.S. Patent No. 8,172,761 to Rulkov et al. ("Rulkov"). Rulkov was filed on October 4, 2011 and issued on May 8, 2012. It is prior art under at least 35 U.S.C. §§ 102(a), (b), and (e) (pre-AIA) and 35 U.S.C. § 102(a), (b), (d) (post-AIA).
- U.S. Patent No. 7,648,463 to Elhag et al. ("Elhag"). Elhag issued on January 19, 2010. It is prior art under at least 35 U.S.C. §§ 102(a) and (b) (pre-AIA) and 35 U.S.C. § 102(a) and (b) (post-AIA).
- U.S. Patent No. 5,795,300 to Bryars ("Bryars"). Bryars issued on August 18, 1998, and is prior art under at least 35 U.S.C. §§ 102(a) and (b) (pre-AIA) and 35 U.S.C. § 102(a) and (b) (post-AIA).
- U.S. Patent No. 8,954,135 to Yuen et al. ("Yuen"). Yuen was filed on June 24, 2013, claims priority back to June 22, 2012, and issued on February 10, 2015. Yuen is prior art under at least 35 U.S.C. §§ 102(a) and (e) (pre-AIA) and 35 U.S.C. § 102(a) and (d) (post-AIA).
- U.S. Patent No. 6,731,967 to Turcott ("Turcott"). Turcott issued on May 4, 2004, and is prior art under 35 U.S.C. §§ 102(a) and (b) (pre-AIA) and 35 U.S.C. § 102(a) and (b) (post-AIA).
- U.S. Patent No. 8,755,871 to Weng et al. ("Weng"). Weng was filed November 30, 2011, and issued on June 17, 2014. It is prior art under 35 U.S.C. §§ 102(a), (b), and (e) (pre-AIA) and 35 U.S.C. § 102(a), (b), (d) (post-AIA).
- U.S. Patent No. 8,315,682 to Such et al. ("Such"). Such was filed on December 5, 2005, and issued on November 20, 2012. It is prior art under 35 U.S.C. §§ 102(a), (b), and (e) (pre-AIA) and 35 U.S.C. § 102(a), (b), (d) (post-AIA).
- U.S. Patent No. 6,708,048 to Chance ("Chance"). Chance issued on March 16, 2004, and is prior art under 35 U.S.C. §§ 102(a) and (b) (pre-AIA) and 35 U.S.C. § 102(a) and (b) (post-AIA).
- U.S. Patent No. 6,701,170 to Stetson ("Stetson"). Stetson issued on March 2, 2004, and is prior art under 35 U.S.C. §§ 102(a) and (b) (pre-AIA) and 35 U.S.C. § 102(a) and (b) (post-AIA).
- U.S. Patent No. 9,179,876 to Ochs et al. ("Ochs"). Ochs was filed on April 30, 2012, and issued on November 10, 2015. Ochs is prior art under 35 U.S.C. §§ 102(a), (b), and (e) (pre-AIA) and 35 U.S.C. § 102(a), (b), (d) (post-AIA).
- U.S. Patent No. 6,031,603 to Fine et al. ("Fine"). Fine issued on February 29, 2000, and is prior art under 35 U.S.C. §§ 102(a) and (b) (pre-AIA) and 35 U.S.C. § 102(a) and (b) (post-AIA).

- U.S. Patent No. 5,368,224 to Richardson et al. ("Richardson"). Richardson issued on November 29, 1994, and is prior art under 35 U.S.C. §§ 102(a) and (b) (pre-AIA) and 35 U.S.C. § 102(a) and (b) (post-AIA).
- U.S. Appl. Pub. No. 2005/0049468 to Carlson et al. ("Carlson"). Carlson was published on March 3, 2005, and is prior art under 35 U.S.C. §§ 102(a) and (b) (pre-AIA) and 35 U.S.C. § 102(a) and (b) (post-AIA).
- U.S. Patent No. 5,746,206 to Mannheimer ("Mannheimer"). Mannheimer issued on May 5, 1998 and is prior art under 35 U.S.C. §§ 102(a) and (b) (pre-AIA) and 35 U.S.C. § 102(a) and (b) (post-AIA).
- U.S. Appl. Pub. No. 2005/0209516 to Fraden ("Fraden"). Fraden was published on September 22, 2005, and is prior art under 35 U.S.C. §§ 102(a) and (b) (pre-AIA) and 35 U.S.C. § 102(a) and (b) (post-AIA).
- JP Appl. No. 2005270544 to Maekawa et al. ("Maekawa"). Maekawa was published on October 6, 2005, and is prior art under 35 U.S.C. §§ 102(a) and (b) (pre-AIA) and 35 U.S.C. § 102(a) and (b) (post-AIA).
- A Wearable Reflectance Pulse Oximeter for Remote Physiological Monitoring by Y. Mendelson ("Mendelson"). Mendelson was published in the Proceedings of the 28th IEEE EMBS Annual International Conference in 2006. It is prior art under 35 U.S.C. §§ 102(a) and (b) (pre-AIA) and 35 U.S.C. § 102(a) and (b) (post-AIA).
- A wireless reflectance pulse oximeter with digital baseline control for unfiltered photoplethysmograms by K. Li & S. Warren ("Li"). Li was published in 2012 in IEEE Transactions on Biomedical Circuits and Systems, 6(3), 269-278. It is prior art under 35 U.S.C. §§ 102(a) and (b) (pre-AIA) and 35 U.S.C. § 102(a) and (b) (post-AIA).
- Design of Pulse Oximeters by Webster ("Webster"). Webster was published by Institute of Physics Publishing in 1997. It is prior art under 35 U.S.C. §§ 102(a) and (b) (pre-AIA) and 35 U.S.C. § 102(a) and (b) (post-AIA).
- "Mobile monitoring with wearable photoplethysmographic biosensors" by Asada et al. ("Asada 2003"). Asada 2003 was published in IEEE Engineering in Medicine and Biology Magazine in May/June 2003. It is prior art under 35 U.S.C. §§ 102(a) and (b) (pre-AIA) and 35 U.S.C. § 102(a) and (b) (post-AIA).
- Rhee et al., Artifact-Resistant Power-Efficient Design of Finger-Ring Plethsymographic Sensors," IEEE Transactions on Biomedical Engineering, Vol. 48, No. 7 (July 2001) ("Asada 2001"). Asada 2001 was published in IEEE Transactions on Biomedical Engineering in July 2001. It is prior art under 35 U.S.C. §§ 102(a) and (b) (pre-AIA) and 35 U.S.C. § 102(a) and (b) (post-AIA).
- Asada, The MIT Ring: History, Technology, and Challenges of Wearable Health Monitoring, MIT Industrial Liaison Program 2010 R&D Conference ("Asada 2010"). Asada 2010 was published and/or publicly presented at least as early as November 16, 2010 at the MIT Industrial Liaison Program 2010 R&D Conference. It is prior art under 35 U.S.C. §§ 102(a) and (b) (pre-AIA) and 35 U.S.C. § 102(a) and (b) (post-AIA).
- TAOS TSL260 Datasheet and TSL260 & TSL261 products ("TAOS"). It is prior art under 35 U.S.C. §§ 102(a) and (b) (pre-AIA) and 35 U.S.C. § 102(a) and (b) (post-AIA).
- The Root, Radius-7, Radical-7, Radical-8, and certain pulse oximeters and pulse oximetry sensors manufactured by Masimo ("Masimo"). It is prior art under 35 U.S.C. §§ 102(a) and (b) (pre-AIA) and 35 U.S.C. § 102(a) and (b) (post-AIA).

- The iSpO2 pulse oximeter manufactured by Masimo ("Masimo iSpO2"). It is prior art under 35 U.S.C. §§ 102(a) and (b) (pre-AIA) and 35 U.S.C. § 102(a) and (b) (post-AIA).
- The WristOx pulse oximeter and certain pulse oximeters and pulse oximetry sensors manufactured by Nonin Medical ("Nonin Medical"). It is prior art under 35 U.S.C. §§ 102(a) and (b) (pre-AIA) and 35 U.S.C. § 102(a) and (b) (post-AIA).
- The OxiMax, NPB-40, N-550, and certain pulse oximeters and pulse oximetry sensors manufactured by Nellcor ("Nellcor"). It is prior art under 35 U.S.C. §§ 102(a) and (b) (pre-AIA) and 35 U.S.C. § 102(a) and (b) (post-AIA).
- The FitBit One manufactured by FitBit ("FitBit One"). It is prior art under 35 U.S.C. §§ 102(a) and (b) (pre-AIA) and 35 U.S.C. § 102(a) and (b) (post-AIA).
- The FitBit Charge HR manufactured by FitBit ("FitBit Charge HR"). It is prior art under 35 U.S.C. §§ 102(a) and (b) (pre-AIA) and 35 U.S.C. § 102(a) and (b) (post-AIA).
- The Adidas miCoach Smart Run GPS watch and other heart rate monitors manufactured by Adidas ("Adidas"). They are prior art under 35 U.S.C. §§ 102(a) and (b) (pre-AIA) and 35 U.S.C. § 102(a) and (b) (post-AIA).

Apple has separately charted most of the above references against the asserted claims, and the exemplary passages of each reference appear in that reference's claim chart. For any references not separately charted, exemplary passages appear in the chart below.

For each dependent claim, the disclosures cited for the claim from which it depends are incorporated by reference. For each combination identified below, exemplary rationales to combine are set forth, and additional reasons why a person of ordinary skill in the art would have made that combination are identified in Section I.B of Apple's Invalidity Contentions.

CHART TWO: U.S. Patent No. 9,757,040 Obviousness Combinations

Asserted Claim of ’040 Patent	Combinations
[1] A wearable device for use with a smart phone or tablet, the wearable device comprising:	*See* CHART ONE: ’533 Patent, Claim Elements 5, 5G, and 13A above. To the extent this limitation is not disclosed by any primary reference, it would have been obvious in view of at least Lisogurski, Elhag, Yuen, Rulkov, Asada 2003, Mendelson, Masimo, Masimo iSpO2, Nonin Medical, FitBit One, FitBit Charge HR, Adidas, and Nellcor. Apple has separately charted each reference against the claims. A person of ordinary skill in the art would have found it obvious to configure a measurement system to include a smart phone or tablet. At the time of alleged invention, smart phones and tablets were well-known in the art, and it was well-known that sensors and monitors could be integrated with or communicate with such devices. This configuration is shown in many references, for example in Lisogurski, Elhag, Yuen, Rulkov, Asada 2003, Mendelson, Masimo, Masimo iSpO2, Nonin Medical, FitBit One, FitBit Charge HR, Adidas, and Nellcor. The skilled person would have understood the benefits of this configuration, which include allowing ready access to the data collected by the sensor by patients and medical personnel, providing a method for configuring the monitor or sensor, and enabling integration with other systems for data storage and aggregation. The smart phone or tablet also could perform data processing because, e.g., it had a faster processor or a larger power supply (e.g., its battery has more capacity). It would have been a matter of routine for one skilled in the art to have configured a measurement system in this manner, and doing so was well within the skill of those in the art. In addition, one of ordinary skill in the art would have been motivated to combine each primary reference with each of these references for one or more of the reasons outlined in Section I.B of Defendant’s Invalidity Contentions.
[1A] a measurement device including a light source comprising a plurality of light emitting diodes (LEDs) for measuring one or more physiological parameters	*See* CHART ONE: ’533 Patent, Claim Element 13A above.

Asserted Claim of ’040 Patent	Combinations
[1B] the measurement device configured to generate, by modulating at least one of the LEDs having an initial light intensity, an input optical beam having one or more optical wavelengths,	To the extent this limitation is not disclosed by any primary reference, it would have been obvious in view of any of the references identified in the list of references above that Apple has separately charted against the claims. One of ordinary skill in the art would have been motivated to combine each primary reference with each of these references for one or more of the reasons outlined in Section I.B of Defendant’s Invalidity Contentions.
[1C] wherein at least a portion of the one or more optical wavelengths is a near-infrared wavelength between 700 nanometers and 2500 nanometers;	*See* CHART ONE: ’533 Patent, Claim Element 5B above.
[1D] the measurement device comprising one or more lenses configured to receive and to deliver a portion of the input optical beam to tissue, wherein the tissue reflects at least a portion of the input optical beam delivered to the tissue;	*See* CHART ONE: ’533 Patent, Claim Element 5D above.
[1E] the measurement device further comprising a reflective surface configured to receive and redirect at least a portion of light reflected from the tissue;	To the extent this limitation is not disclosed by any primary reference, it would have been obvious in view of at least Yuen, Chance, and Webster. Apple has separately charted each reference against the claims. This limitation also would have been obvious in view of Maekawa. Exemplary passages from Maekawa are set forth below. A person of ordinary skill in the art would have found it obvious to configure a device to include a reflective surface configured to receive and redirect at least a portion of light reflected from the tissue. This configuration was well known, and is taught at least by Yuen, Chance, Webster, and Maekawa. Those of skill in the art knew of the benefits of this configuration, which allows, for example, concentrating light backscattered from the living body, transmitting light to the receiver

Asserted Claim of ’040 Patent	Combinations
	(e.g., using fiber optics), or focusing light on the receiver. It would have been a matter of routine for one skilled in the art to have included a reflective surface, and doing so was well within the skill of those in the art. In addition, one of ordinary skill in the art would have been motivated to combine each primary reference with each of these references for one or more of the reasons outlined in Section I.B of Defendant’s Invalidity Contentions. <u>Maekawa</u> “Claim 3: The physiological information measuring device according to claim 2 comprising a reflective surface arranged in the cover glass between the light emitting part and the light receiving part that reflects part of the light propagating in the cover glass.” Maekawa, 1. “Claim 4: The physiological information measuring device according to claim 2 comprising a bundle of optical fibers arranged with one end close to the cover glass and the other end close to the light reception surface of the light receiving part. Claim 5: The physiological information measuring device according to claim 1 or claim 2 comprising a concentration part on a surface of the cover glass opposite the light receiving part that concentrates light backscattered from the living body.” Maekawa, 2. “The present invention relates to a physiological information measuring device that when mounted to the wrist (arm), measures physiological information such as pulse rate and the like.” Maekawa, [0001]. “Furthermore, a pulse rate measurement device (physiological information measuring device) with a pulse rate measurement system that uses a light emitting diode (light emitting part) and a light receiving element (light receiving part) has also been proposed (for example, see patent document 2). The pulse rate measurement device disclosed in patent document 2 has a light receiving element for measuring brightness arranged and detects contact based on the output of the light receiving element.” Maekawa, [0004]. “The physiological information measuring device of the present invention comprises a main body, a physiological sensor part provided on the main body that irradiates light towards a living body and generates a physiological information signal based on the amount of light backscattered from this living body, a physiological information calculation part provided on the main body that

Asserted Claim of ’040 Patent	Combinations
	calculates physiological information based on the physiological information signal, a detection part arranged on the bottom surface side of the main body that detects whether or not the physiological sensor is in contact with the surface of the living body, a light emitting part that irradiates the living body with light, a cover glass arranged on the bottom surface of the main body that transmits and reflects light irradiated from the light emitting part as well as transmits light backscattered from the living body, a light receiving part that receives light transmitted by the cover glass, and a determination part that determines whether or not the living body and physiological sensor are in contact based on the light reception signal received by the light receiving part.” Maekawa, [0008]. “Furthermore, with the physiological information measuring device of the present invention, the light receiving part preferably receives backscattered light from the living body transmitted through the cover glass and generates a physiological information signal based on the amount of backscattered light.” Maekawa, [0010]. “Furthermore, the physiological information measuring device of the present invention preferably comprises a reflective surface in the cover glass in between the light emitting part and the light receiving part that reflects a part of the light propagating in the cover glass.” Maekawa, [0012]. “As optical fibers are arranged for the physiological information measuring device according to the present invention, light that passes along the surface of the living body such as the skin is reflected by the outer circumferential surface of the optical fiber. Light that only passes along the surface of the skin of the living body does not contain very much physiological information whereby blocking this light makes it so that most of the light that enters the optical fiber, propagates in the optical fiber, and is lead to the light receiving part is light that has passed deeply through the living body under the inner skin, in other words, light that contains a lot of physiological information.” Maekawa, [0015]. “Furthermore, the physiological information measuring device of the present invention preferably comprises a concentration part on the surface of the cover glass opposite the light receiving part that concentrates light backscattered from the living body.” Maekawa, [0016]. “Furthermore, as shown in Fig. 7, the physiological information measuring device 1 comprises a cover glass 23 arranged on the bottom surface 2a of the housing 2 that transmits and reflects light

Asserted Claim of ’040 Patent	Combinations
	irradiated by the LED 4 and transmits light backscattered by the living body. Furthermore, the PD 5 is set up to receive light propagating in the cover glass 23 as well as light backscattered from the living body and transmitted through the cover glass 23.” Maekawa, [0023]. Fig. 7 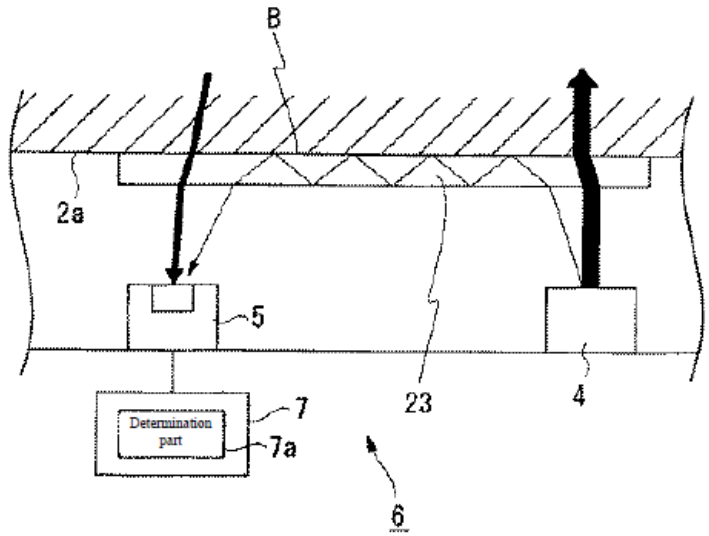 “First, as shown in the flowchart of Fig. 8, pushing of the buttons 20 to switch into pulse measurement mode sets the PD 5 power supply to ON state (step S1). First, with the LED 4 in OFF state, the voltage of the light reception signal received by the PD 5 is detected (step S2). Light received by the PD 5 is output to the determination part 7a of the data processor 7 as a voltage. In this case, the determination part 7a continuously compares the voltage value detected to a threshold voltage αV (step S3) and if the detected voltage value is greater than the threshold voltage αV (step S3 "No"), the LED 4 is turned ON (step S4). In addition, the determination part 7a of the data processor 7 continuously compares the detected voltage to threshold voltages βV and γV (step S5) and if the detected voltage compared to the threshold voltages is "greater than βV

Asserted Claim of ’040 Patent	Combinations
	and less than γV" (step S5 "Yes"), it is judged that the LED 4 and PD 5 are in contact with the surface of the living body B.” Maekawa, [0036]. “As has been described above, with the physiological information measuring device 1 of the present embodiment, contact of the LED 4 and PD 5 with the surface of the living body B is detected based on light received by the PD 5 while changing the light emitting status of the LED 4 enabling detection of contact with the surface of the living body B using a simple configuration. Therefore, in the case external light enters the PD 5, confirmation of contact with the surface of the living body B can be accurately performed enabling detection of physiological information with a high level of precision.” Maekawa, [0045]. “For example, as shown in Fig. 9, a reflective surface 23a that reflects a part of the light propagating in the cover glass 23 can be provided in the cover glass 23 arranged between the LED 4 and PD 5. In the case of this configuration, of the light emitted by the LED 4, light that propagates in the cover glass 23 is reflected towards the surface of the living body B by the reflective surface 23a. Therefore, when measuring physiological information, light propagating in the cover glass 23 that becomes light noise can be blocked enabling improving the SN ratio for generating a pulse signal.” Maekawa, [0047]. “In other words, as shown in Fig. 10, the PD 5 and cover glass 23 can be arranged separated and a bundle of optical fibers 40 provided with one end 40a arranged close to the cover glass 23 and the other end 40b close to the light receiving surface 5a of the PD 5. In the case of this configuration, optical fibers 40 are arranged in the gap between the PD 5 and cover glass 23 so light passing along the surface of the skin of the surface of the living body B is reflected by the outer circumferential surface of the optical fibers 40. Light that only passes along the surface of the skin of the surface of the living body B does not contain very much physiological information so that blocking this light makes it so that most of the light that enters the optical fibers 40, propagates in the optical fibers 40, and is lead to the PD5 is light that has passed deeply through the living body under the inner skin, in other words, light that contains a lot of physiological information.” Maekawa, [0048]. “Furthermore, as shown in Fig. 11, a crevice (concentrating part) 41 that concentrates light backscattered from the living body can be formed on the surface of the cover glass 23 opposite the

Asserted Claim of ’040 Patent	Combinations
	PD 5. In the case of this configuration, light backscattered from the irradiated living body onto the PD 5 is efficiently concentrated by the crevice 41 onto the light receiving surface 5a of the PD 5. Therefore, with regards to the PD 5 generating a pulse rate signal, the light receiving surface area of the PD 5 can be reduced enabling size reduction of the physiological information measuring device overall. Note, the concentration part only needs to concentrate light onto the light receiving surface 5a of the PD 5 and so can be a convex shape as well.” Maekawa, [0049]. “Furthermore, a configuration of using the LED 4 and PD 5 for both detecting contact with the surface of the living body B and receiving light backscattered from the living body to generate a pulse signal is employed; however, as shown in Fig. 12, a physiological information measuring device 50 provided with a detection part 53 having an additional pair of LED 51 and PD 52 and a light blocking plate 54 for blocking between the LED 4, PD 5 and LED 52, PD 52 is also feasible. In the case of this configuration, the LED 4 and PD 5 detect contact with the surface of the living body B and the LED 51 and PD 52 receive light backscattered from the living body for generating a pulse signal so the backscatter light needed to generate the pulse signal is received by the PD 52.” Maekawa, [0050]. “Furthermore, placing a restriction on the spacing of the LED 4 and PD 5 makes it possible to prevent light emitted by the LED 4 and reflected by the surface of the cover glass 23 from entering the PD 5. Examples of the positional relationship between the LED 4 and PD 5 when using acrylic with a refractive index of 1.5 as the cover glass material are shown in Fig. 13 as well as in Table 1. Maekawa, [0051]. [0052]

Asserted Claim of ’040 Patent	Combinations
	Table 1 Data | X | Y | Z_1 | Z2 | Z3 a | 0.1 | 0.5 | 0.7 | 2.211083 | 2.911083 b | 0.5 | 0.5 | 3.5 | 2.211083 | 5.711083 c | 1 | 0.5 | 7 | 2.211083 | 9.211083 d | 0.1 | 1 | 0.7 | 4.422166 | 5.122166 e | 0.5 | 1 | 3.5 | 4.422166 | 7.922166 f | 1 | 1 | 7 | 4.422166 | 11.42217 The PD 5 has a structure of the light receiving surface 5a being one level lower than the upper surface of the package 5b. With the LED 4 and PD 5 arranged in the same plane, the distance from these to the cover glass 23 is taken to be X and the thickness of the cover glass 23 is taken to be Y. Here, the distance Z1 such that of the light emitted by the LED 4, the light reflected off the bottom surface 23b of the cover glass 23 does not enter the light receiving surface 5a and the distance Z3 such that light reflected inside the cover glass 23 does not enter the light receiving surface 5a differ depending on X and Y. As X, Y become long, Z1 and Z3 also get longer and conversely, as X, Y become shorter, Z1 and Z3 also get shorter. In this manner, setting of design values shown in Table 1 above becomes feasible based on the area reflected light is blocked in.” Maekawa, [0052]. “Furthermore, functionality such as wireless communication means enabling wireless communication with other electronic devices can be added. Thus, wireless communication such as bluetooth or the like enables data communication of pulse rate stored in memory to external electronic devices as well as obtaining various types of information.” Maekawa, [0054]. “Next, state 3 shows a state of external light intensity of approximately 600 Lx with the physiological information measuring device 1 not mounted.” Maekawa, [0059]. “First, while the LED 4 is in OFF state, there is no external light [sic] or light from the LED 4, but there is external light, the output voltage (measurement value) from the PD 5 is set to approximately 0.12 V. Next, when the LED 4 is turned ON, there is irradiation from both external

Asserted Claim of ’040 Patent	Combinations
	light and the LED 4 and light propagating inside the cover glass 23 enters the PD 5 so the output voltage (measurement value) from the PD 5 is set to approximately 0.11 V. These results differ slightly based on the conditions of the external light intensity and surface of the living body as well as the distance between the LED 4 and PD 5 but from these results, if the measurement value of the PD 5 drops below 1.9 V with the LED 4 OFF it means that external light is entering into the PD 5 and thus the LED 4 and PD 5 are judged to be in a non-contact status with the surface of the living body B. Furthermore, when the measurement value of the PD 5 with the LED 4 OFF is higher than 1.9 V and the measurement value of the PD 5 with the LED 4 ON is higher than 1.8 V, backscattered light from a living body is judged to not be entering the PD 5 so the LED 4 and PD 5 are judged to be in a non-contact status with the surface of the living body B; however, if the measurement value of the PD 5 with the LED 4 ON is lower than 0.4 V, it is judged that light reflected from an object other than a living body is entering the PD 5 so the LED 4 and PD 5 are judged to be in a non-contact status with the surface of the living body B.” Maekawa, [0060]. Fig. 9 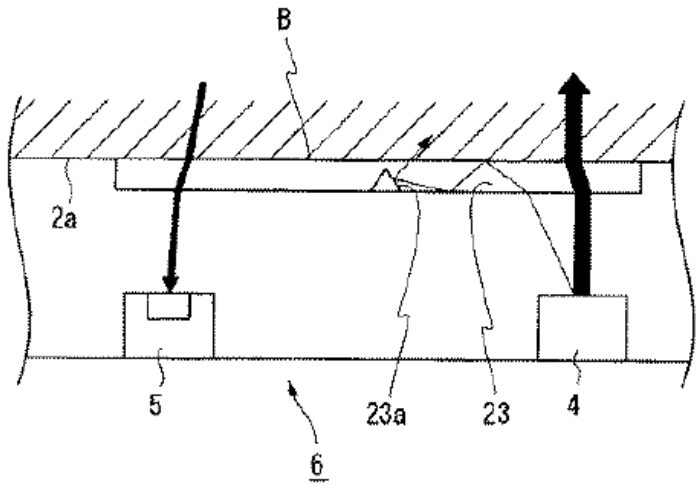

Asserted Claim of ’040 Patent	Combinations
	Fig. 10 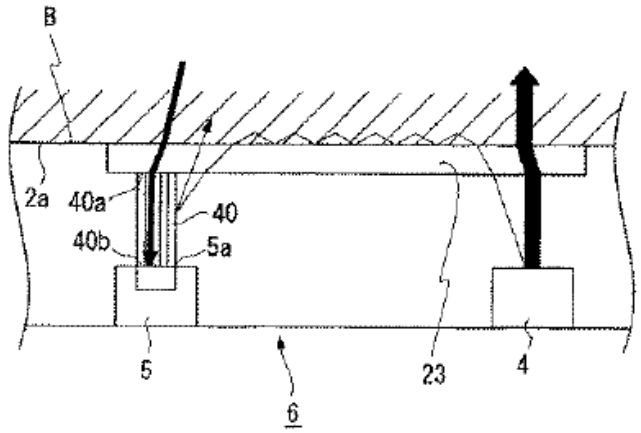 Fig. 11 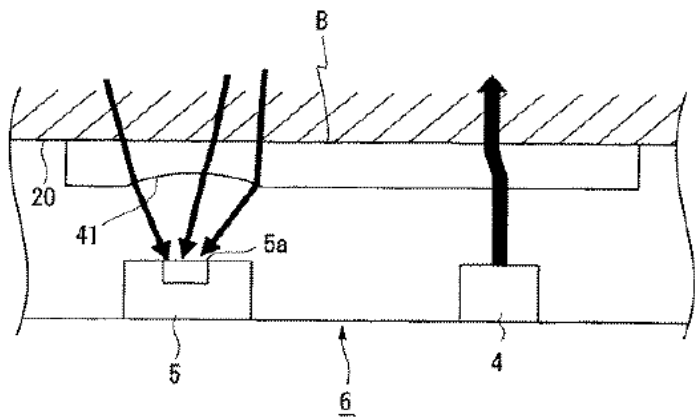

Asserted Claim of ’040 Patent	Combinations
[1F] the measurement device further comprising a receiver configured to: capture light while the LEDs are off and convert the captured light into a first signal and capture light while at least one of the LEDs is on and convert the captured light into a second signal, the captured light including at least a portion of the input optical beam reflected from the tissue;	To the extent this limitation is not disclosed by any primary reference, it would have been obvious in view of at least Lisogurski, Carlson, Elhag, Yuen, Bryars, Rulkov, Webster, Nonin Medical, Masimo, Masimo iSpO$_2$, FitBit Charge HR, Adidas, and Nellcor. Apple has separately charted each reference against the claims. A person of ordinary skill in the art would have found it obvious to configure a device to capture light while the LEDs are on and while the LEDs are off and then difference the signals. This was a well-known technique for reducing the effects of ambient light on a sensor. This technique was taught by many references, including at least Lisogurski, Carlson, Elhag, Yuen, Bryars, Rulkov, Webster, Nonin Medical, Masimo, Masimo iSpO$_2$, FitBit Charge HR, Adidas, and Nellcor. The benefits of this configuration were well-known in the art, and include allowing for more accurate measurements and providing power savings. It would have been a matter of routine for one skilled in the art to have configured a sensor in this manner, and doing so was well within the skill of those in the art. In addition, one of ordinary skill in the art would have been motivated to combine each primary reference with each of these references for one or more of the reasons outlined in Section I.B of Defendant’s Invalidity Contentions.
[1G] the measurement device configured to improve a signal-to-noise ratio of the input optical beam reflected from the tissue by differencing the first signal and the second signal;	To the extent this limitation is not disclosed by any primary reference, it would have been obvious in view of at least Lisogurski, Carlson, Elhag, Yuen, Bryars, Rulkov, Webster, Nonin Medical, Masimo, Masimo iSpO$_2$, FitBit Charge HR, Adidas, and Nellcor. Apple has separately charted each reference against the claims. A person of ordinary skill in the art would have found it obvious to configure a device to capture light while the LEDs are on and while the LEDs are off and then difference the signals. This was a well-known technique for reducing the effects of ambient light on a sensor. This technique was taught by many references, including at least Lisogurski, Carlson, Elhag, Yuen, Bryars, Rulkov, Webster, Nonin Medical, Masimo, Masimo iSpO$_2$, FitBit Charge HR, Adidas, and Nellcor. The benefits of this configuration were well-known in the art, and include allowing for more accurate measurements and providing power savings. It would have been a matter of routine for one skilled in the art to have configured a sensor in this manner, and doing so was well within the skill of those in the art. In addition, one of ordinary skill in the art would have been motivated to combine

Asserted Claim of ’040 Patent	Combinations
	each primary reference with each of these references for one or more of the reasons outlined in Section I.B of Defendant’s Invalidity Contentions.
[1H] the light source configured to further improve the signal-to-noise ratio of the input optical beam reflected from the tissue by increasing the light intensity relative to the initial light intensity from at least one of the LEDs;	*See* CHART ONE: ’533 Patent, Claim Element 5C above.
[1I] the measurement device further configured to generate an output signal representing at least in part a non-invasive measurement on blood contained within the tissue; and	*See* CHART ONE: ’533 Patent, Claim Element 10 above.
[1J] the wearable device configured to communicate with the smart phone or tablet, the smart phone or tablet comprising a wireless receiver, a wireless transmitter, a display, a voice input module, a speaker, and a touch screen, the smart phone or tablet configured to receive and to process at least a portion of the output signal,	*See* CHART ONE: ’533 Patent, Claim Elements 5G and 5H above.
[1K] wherein the smart phone or tablet is configured to store and	*See* CHART ONE: ’533 Patent, Claim Elements 5I and 5J above.

Asserted Claim of ’040 Patent	Combinations
display the processed output signal, wherein at least a portion of the processed output signal is configured to be transmitted over a wireless transmission link.	
[2] The wearable device of claim 1, wherein the receiver is configured to be synchronized to the modulation of the at least one of the LEDs.	*See* CHART ONE: ’533 Patent, Claim Element 5F above.
[4] The wearable device of claim 1, wherein the receiver is located a first distance from a first one of the LEDs and a different distance from a second one of the LEDs such that the receiver can capture a third signal from the first LED and a fourth signal from the second LED, and wherein the output signal is generated in part by comparing the third and fourth signals.	*See* CHART ONE: ’533 Patent, Claim Element 8 above.

EXHIBIT A-3

U.S. Patent No. 9,861,286: Obviousness Combinations

To the extent any of the references Apple has charted against the asserted claims of U.S. Patent No. 9,861,286 ("the '286 Patent") do not disclose any of the limitations of those claims, each reference renders those claims obvious alone and/or in view of at least one or more of any of the following references:

- U.S. Patent No. 9,241,676 to Lisogurski et al. ("Lisogurski"). Lisogurski was filed on May 31, 2012, and issued on January 26, 2016. It is prior art under at least 35 U.S.C. §§ 102(a), (b), and (e) (pre-AIA) and 35 U.S.C. § 102(a), (b), (d) (post-AIA).
- U.S. Patent No. 8,172,761 to Rulkov et al. ("Rulkov"). Rulkov was filed on October 4, 2011 and issued on May 8, 2012. It is prior art under at least 35 U.S.C. §§ 102(a), (b), and (e) (pre-AIA) and 35 U.S.C. § 102(a), (b), (d) (post-AIA).
- U.S. Patent No. 7,648,463 to Elhag et al. ("Elhag"). Elhag issued on January 19, 2010. It is prior art under at least 35 U.S.C. §§ 102(a) and (b) (pre-AIA) and 35 U.S.C. § 102(a) and (b) (post-AIA).
- U.S. Patent No. 5,795,300 to Bryars ("Bryars"). Bryars issued on August 18, 1998, and is prior art under at least 35 U.S.C. §§ 102(a) and (b) (pre-AIA) and 35 U.S.C. § 102(a) and (b) (post-AIA).
- U.S. Patent No. 8,954,135 to Yuen et al. ("Yuen"). Yuen was filed on June 24, 2013, claims priority back to June 22, 2012, and issued on February 10, 2015. Yuen is prior art under at least 35 U.S.C. §§ 102(a) and (e) (pre-AIA) and 35 U.S.C. § 102(a) and (d) (post-AIA).
- U.S. Patent No. 6,731,967 to Turcott ("Turcott"). Turcott issued on May 4, 2004, and is prior art under 35 U.S.C. §§ 102(a) and (b) (pre-AIA) and 35 U.S.C. § 102(a) and (b) (post-AIA).
- U.S. Patent No. 8,755,871 to Weng et al. ("Weng"). Weng was filed November 30, 2011, and issued on June 17, 2014. It is prior art under 35 U.S.C. §§ 102(a), (b), and (e) (pre-AIA) and 35 U.S.C. § 102(a), (b), (d) (post-AIA).
- U.S. Patent No. 8,315,682 to Such et al. ("Such"). Such was filed on December 5, 2005, and issued on November 20, 2012. It is prior art under 35 U.S.C. §§ 102(a), (b), and (e) (pre-AIA) and 35 U.S.C. § 102(a), (b), (d) (post-AIA).
- U.S. Patent No. 6,708,048 to Chance ("Chance"). Chance issued on March 16, 2004, and is prior art under 35 U.S.C. §§ 102(a) and (b) (pre-AIA) and 35 U.S.C. § 102(a) and (b) (post-AIA).
- U.S. Patent No. 6,701,170 to Stetson ("Stetson"). Stetson issued on March 2, 2004, and is prior art under 35 U.S.C. §§ 102(a) and (b) (pre-AIA) and 35 U.S.C. § 102(a) and (b) (post-AIA).
- U.S. Patent No. 9,179,876 to Ochs et al. ("Ochs"). Ochs was filed on April 30, 2012, and issued on November 10, 2015. Ochs is prior art under 35 U.S.C. §§ 102(a), (b), and (e) (pre-AIA) and 35 U.S.C. § 102(a), (b), (d) (post-AIA).

- U.S. Patent No. 6,031,603 to Fine et al. ("Fine"). Fine issued on February 29, 2000, and is prior art under 35 U.S.C. §§ 102(a) and (b) (pre-AIA) and 35 U.S.C. § 102(a) and (b) (post-AIA).
- U.S. Patent No. 5,368,224 to Richardson et al. ("Richardson"). Richardson issued on November 29, 1994, and is prior art under 35 U.S.C. §§ 102(a) and (b) (pre-AIA) and 35 U.S.C. § 102(a) and (b) (post-AIA).
- U.S. Patent No. 5,746,206 to Mannheimer ("Mannheimer"). Mannheimer issued on May 5, 1998 and is prior art under 35 U.S.C. §§ 102(a) and (b) (pre-AIA) and 35 U.S.C. § 102(a) and (b) (post-AIA).
- U.S. Appl. Pub. No. 2005/0049468 to Carlson et al. ("Carlson"). Carlson was published on March 3, 2005, and is prior art under 35 U.S.C. §§ 102(a) and (b) (pre-AIA) and 35 U.S.C. § 102(a) and (b) (post-AIA).
- U.S. Appl. Pub. No. 2005/0209516 to Fraden ("Fraden"). Fraden was published on September 22, 2005, and is prior art under 35 U.S.C. §§ 102(a) and (b) (pre-AIA) and 35 U.S.C. § 102(a) and (b) (post-AIA).
- JP Appl. No. 2005270544 to Maekawa et al. ("Maekawa"). Maekawa was published on October 6, 2005, and is prior art under 35 U.S.C. §§ 102(a) and (b) (pre-AIA) and 35 U.S.C. § 102(a) and (b) (post-AIA).
- A Wearable Reflectance Pulse Oximeter for Remote Physiological Monitoring by Y. Mendelson ("Mendelson"). Mendelson was published in the Proceedings of the 28th IEEE EMBS Annual International Conference in 2006. It is prior art under 35 U.S.C. §§ 102(a) and (b) (pre-AIA) and 35 U.S.C. § 102(a) and (b) (post-AIA).
- A wireless reflectance pulse oximeter with digital baseline control for unfiltered photoplethysmograms by K. Li & S. Warren ("Li"). Li was published in 2012 in IEEE Transactions on Biomedical Circuits and Systems, 6(3), 269-278. It is prior art under 35 U.S.C. §§ 102(a) and (b) (pre-AIA) and 35 U.S.C. § 102(a) and (b) (post-AIA).
- Design of Pulse Oximeters by Webster ("Webster"). Webster was published by Institute of Physics Publishing in 1997. It is prior art under 35 U.S.C. §§ 102(a) and (b) (pre-AIA) and 35 U.S.C. § 102(a) and (b) (post-AIA).
- "Mobile monitoring with wearable photoplethysmographic biosensors" by Asada et al. ("Asada 2003"). Asada 2003 was published in IEEE Engineering in Medicine and Biology Magazine in May/June 2003. It is prior art under 35 U.S.C. §§ 102(a) and (b) (pre-AIA) and 35 U.S.C. § 102(a) and (b) (post-AIA).
- Rhee et al., Artifact-Resistant Power-Efficient Design of Finger-Ring Plethsymographic Sensors," IEEE Transactions on Biomedical Engineering, Vol. 48, No. 7 (July 2001) ("Asada 2001"). Asada 2001 was published in IEEE Transactions on Biomedical Engineering in July 2001. It is prior art under 35 U.S.C. §§ 102(a) and (b) (pre-AIA) and 35 U.S.C. § 102(a) and (b) (post-AIA).
- Asada, The MIT Ring: History, Technology, and Challenges of Wearable Health Monitoring, MIT Industrial Liaison Program 2010 R&D Conference ("Asada 2010"). Asada 2010 was published and/or publicly presented at least as early as November 16, 2010 at the MIT Industrial Liaison Program 2010 R&D Conference. It is prior art under 35 U.S.C. §§ 102(a) and (b) (pre-AIA) and 35 U.S.C. § 102(a) and (b) (post-AIA).
- TAOS TSL260 Datasheet and TSL260 & TSL261 products ("TAOS"). It is prior art under 35 U.S.C. §§ 102(a) and (b) (pre-AIA) and 35 U.S.C. § 102(a) and (b) (post-AIA).

- The Root, Radius-7, Radical-7, Radical-8, and certain pulse oximeters and pulse oximetry sensors manufactured by Masimo ("Masimo"). It is prior art under 35 U.S.C. §§ 102(a) and (b) (pre-AIA) and 35 U.S.C. § 102(a) and (b) (post-AIA).
- The iSpO2 pulse oximeter manufactured by Masimo ("Masimo iSpO2"). It is prior art under 35 U.S.C. §§ 102(a) and (b) (pre-AIA) and 35 U.S.C. § 102(a) and (b) (post-AIA).
- The WristOx pulse oximeter and certain pulse oximeters and pulse oximetry sensors manufactured by Nonin Medical ("Nonin Medical"). It is prior art under 35 U.S.C. §§ 102(a) and (b) (pre-AIA) and 35 U.S.C. § 102(a) and (b) (post-AIA).
- The OxiMax, NPB-40, N-550, and certain pulse oximeters and pulse oximetry sensors manufactured by Nellcor ("Nellcor"). It is prior art under 35 U.S.C. §§ 102(a) and (b) (pre-AIA) and 35 U.S.C. § 102(a) and (b) (post-AIA).
- The FitBit One manufactured by FitBit ("FitBit One"). It is prior art under 35 U.S.C. §§ 102(a) and (b) (pre-AIA) and 35 U.S.C. § 102(a) and (b) (post-AIA).
- The FitBit Charge HR manufactured by FitBit ("FitBit Charge HR"). It is prior art under 35 U.S.C. §§ 102(a) and (b) (pre-AIA) and 35 U.S.C. § 102(a) and (b) (post-AIA).
- The Adidas miCoach Smart Run GPS watch and other heart rate monitors manufactured by Adidas ("Adidas"). They are prior art under 35 U.S.C. §§ 102(a) and (b) (pre-AIA) and 35 U.S.C. § 102(a) and (b) (post-AIA).

Apple has separately charted most of the above references against the asserted claims, and the exemplary passages of each reference appear in that references claim chart. For any references not separately charted, exemplary passages appear in the chart below.

For each dependent claim, the disclosures cited for the claim from which it depends are incorporated by reference. For each combination identified below, exemplary rationales to combine are set forth, and additional reasons why a person of ordinary skill in the art would have made that combination are identified in Section I.B of Apple's Invalidity Contentions.

CHART THREE: U.S. Patent No. 9,861,286: Obviousness Combinations

Asserted Claim of ’286 Patent	Combinations
[16] A wearable device for use with a smart phone or tablet, the wearable device comprising:	*See* CHART ONE: ’533 Patent, Claim Elements 5, 5G, and 13A above.
[16A] a measurement device including a light source comprising a plurality of light emitting diodes (LEDs) for measuring one or more physiological parameters,	*See* CHART ONE: ’533 Patent, Claim Element 13A above.
[16B] the measurement device configured to generate, by modulating at least one of the LEDs having an initial light intensity, an optical beam having a plurality of optical wavelengths,	*See* CHART TWO: ’040 Patent, Claim Element 1B above.
[16C] wherein at least a portion of the plurality of optical wavelengths is a near-infrared wavelength between 700 nanometers and 2500 nanometers;	*See* CHART ONE: ’533 Patent, Claim Element 5B above.
[16D] the measurement device comprising one or more lenses configured to receive and to deliver a portion of the optical beam to tissue, wherein the tissue reflects at least a portion of the	*See* CHART ONE: ’533 Patent, Claim Element 5D above.

Asserted Claim of ’286 Patent	Combinations
optical beam delivered to the tissue, and	
[16E] wherein the measurement device is adapted to be placed on a wrist or an ear of a user;	To the extent this limitation is not disclosed by any primary reference, it would have been obvious in view of at least Lisogurski, Carlson, Yuen, Fraden, Rulkov, Bryars, Masimo iSpO2, Nonin Medical, FitBit One, and FitBit Charge HR. Apple has separately charted each reference against the claims. A person of ordinary skill in the art would have found it obvious to configure a device to be placed on a wrist or an ear of a user. At the time of alleged invention, wearable measurement devices were well-known in the art, and it was known that these devices could be placed on a wrist or ear of a user. This configuration is shown in many references, for example in Lisogurski, Carlson, Yuen, Fraden, Rulkov, Bryars, Masimo iSpO2, Nonin Medical, FitBit One, and FitBit Charge HR. The skilled person would have understood the benefits of this configuration, which include allowing a device to be small and lightweight, comfortable and easy to carry and use, able to be used for an extended period of time and while the user is in motion and non-obtrusive. It would have been a matter of routine for one skilled in the art to have configured a device in this manner, and doing so was well within the skill of those in the art. In addition, one of ordinary skill in the art would have been motivated to combine each primary reference with each of these references for one or more of the reasons outlined in Section I.B of Defendant’s Invalidity Contentions.
[16F] the measurement device further comprising a receiver configured to: capture light while the LEDs are off and convert the captured light into a first signal and capture light while at least one of the LEDs is on and convert the captured light into a second signal, the captured light	*See* CHART TWO: ’040 Patent, Claim Element 1F above.

Asserted Claim of ’286 Patent	Combinations
including at least a portion of the optical beam reflected from the tissue;	
[16G] the measurement device configured to improve a signal-to-noise ratio of the optical beam reflected from the tissue by differencing the first signal and the second signal;	*See* CHART TWO: ’040 Patent, Claim Element 1G above.
[16H] the light source configured to further improve the signal-to-noise ratio of the optical beam reflected from the tissue by increasing the light intensity relative to the initial light intensity from at least one of the LEDs;	*See* CHART ONE: ’533 Patent, Claim Element 5C above.
[16I] the measurement device further configured to generate an output signal representing at least in part a non-invasive measurement on blood contained within the tissue; and	*See* CHART ONE: ’533 Patent, Claim Element 10 above.
[16J] wherein the receiver includes a plurality of spatially separated detectors,	To the extent this limitation is not disclosed by any primary reference, it would have been obvious in view of at least Fraden, Yuen, Chance, Fine, Stetson, Lisogurski, Asada 2003, Mendelson, Masimo, FitBit Charge HR, Adidas, and Nellcor. Apple has separately charted each reference against the claims. This limitation also would have been obvious in view of Mannheimer. Exemplary passages from Mannheimer are set forth below.

Asserted Claim of ’286 Patent	Combinations
	A person of ordinary skill in the art would have found it obvious to configure a device to include a plurality of spatially separated detectors. This configuration was well-known in the art, and is taught by at least Fraden, Yuen, Chance, Fine, Stetson, Lisogurski, Asada 2003, Masimo, FitBit Charge HR, Adidas, and Nellcor. It was well-known to those in the art that this configuration provided benefits, including by allowing selection of different LEDs and sensors for different placements on a user’s body, correction of different noise sources, selection of different LEDs and sensors depending on the type of noise detected in the signal, allowing multiple measurement points, and increasing sensor accuracy. It would have been a matter of routine for one skilled in the art to have configured a device to include this feature, and doing so was well within the skill of those in the art. In addition, one of ordinary skill in the art would have been motivated to combine each primary reference with each of these references for one or more of the reasons outlined in Section I.B of Defendant’s Invalidity Contentions. Mannheimer:

Asserted Claim of ’286 Patent	Combinations
	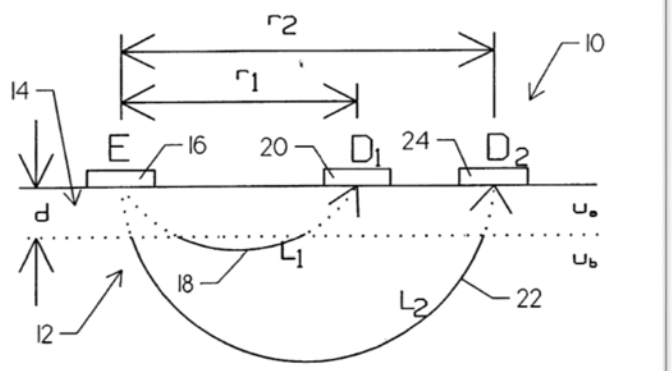 FIG. 1 A

Asserted Claim of ’286 Patent	Combinations
	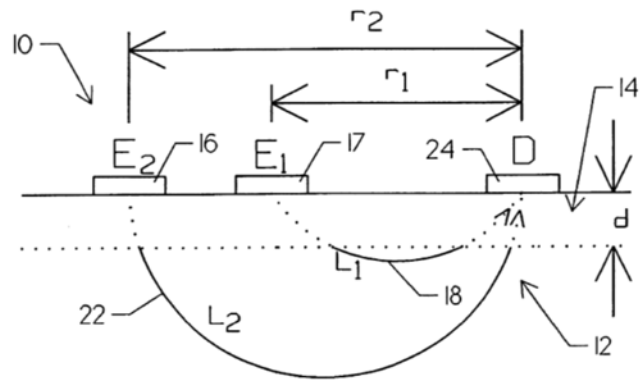 FIG. 1 B

Asserted Claim of ’286 Patent	Combinations
	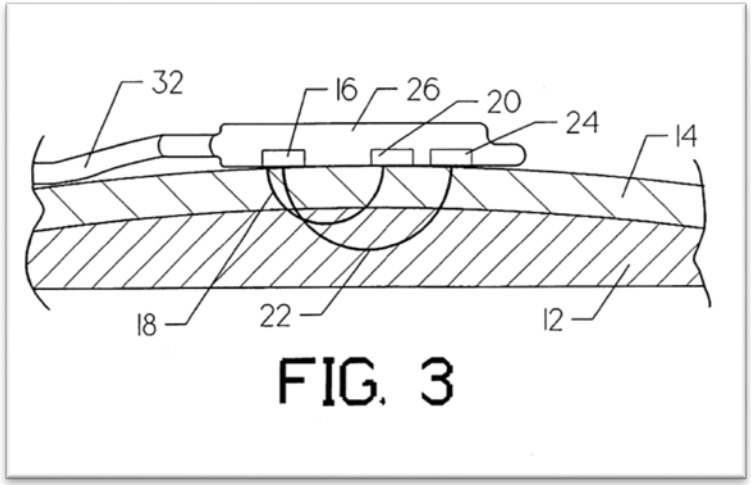 FIG. 3 “The present invention overcomes the disadvantages found in the prior art by providing a pulse oximetry system for the determination of arterial blood oxygen saturation level at a particular depth of tissue which readily compensates for limitations induced in the prior art systems. Specifically, the present invention allows for pulsed oximetry measurement which isolates arterial saturation levels for particular ranges of tissue layers which rejects saturation levels of the tissue above or below the tissue of interest by utilizing multiple spaced detectors and/or emitters. According to one embodiment of the invention, a sensor for use with a pulse oximeter monitor comprises a patient interface housing for coupling to a patient; at least three sensor areas for emitting electromagnetic radiation which penetrates tissue of the patient and detects that electromagnetic radiation scattered by the tissue, a spacing between a first pair of electromagnetic emitter and electromagnetic detector being different than that of a spacing between a second pair of electromagnetic emitter and electromagnetic detector; and means for calculating an arterial oxygen saturation level of the patient in response to the detected electromagnetic radiation. According to two preferred embodiments, the sensor areas comprise first and second separated and spaced apart emitter areas each capable of generating light of at least two distinct wavelengths,

Asserted Claim of ’286 Patent	Combinations
	and a detector, the first emitter area and the detector corresponding to a first pair of emitter and detector, the second emitter area and the detector corresponding to the second pair of emitter and detector; or the sensor areas comprise first and second detector areas each capable of detecting light of at least two separate wavelength values, and an emitter area capable of generating said light having the at least two separated wavelength values.” Mannheimer, Col. 1:64-2:30. “According to a first preferred embodiment, emitter 16 transmits electromagnetic radiation in the visible and near infrared region at two predetermined wavelengths (e.g. 660 nm and 905 nm). Emitter 16 is shown as a single entity in this example. However, different emitters may be used for the different predetermined wavelengths, if desired. If more than one emitter is used, it is most convenient that they be co-located to simulate a single point source. LED's are a preferred type of emitter. The signals from emitter 16 travel generally along path 18 to a first detector 20 and along path 22 to a second detector 24 as shown. The length of path 18 within layer 12 (with absorption u_b) is shown as L_1 and the length of path 22 within layer 12 is shown as L_2. Detector 20 is spaced a distance of r_1 from emitter 16 and detector 24 is spaced at a distance of r_2. Mannheimer, Col. 3, 10-24.
[16K] wherein at least one analog to digital converter is coupled to the spatially separated detectors.	To the extent this limitation is not disclosed by any primary reference, it would have been obvious in view of at least Fraden, Yuen, Chance, Fine, Stetson, Lisogurski, Masimo, Masimo iSpO$_2$, Nonin Medical, FitBit Charge HR, Adidas, and Nellcor. Apple has separately charted each reference against the claims. This limitation also would have been obvious in view of Mannheimer. Exemplary passages from Mannheimer are set forth below. A person of ordinary skill in the art would have found it obvious to configure a device to include a plurality of spatially separated detectors wherein they are coupled to at least one analog to digital converter. This configuration was well-known in the art, and is taught by at least Fraden, Yuen, Chance, Fine, Stetson, Lisogurski, Masimo, Masimo iSpO$_2$, Nonin Medical, FitBit Charge HR, Adidas, and Nellcor. It was well-known to those in the art that this configuration provided benefits, including by allowing digital signal processing of the signal received from each detector, selection of different LEDs and sensors for different placements on a user’s body, correction of

Asserted Claim of ’286 Patent	Combinations
	different noise sources, selection of different LEDs and sensors depending on the type of noise detected in the signal, allowing multiple measurement points, and increasing sensor accuracy. It would have been a matter of routine for one skilled in the art to have configured a device to include this feature, and doing so was well within the skill of those in the art. In addition, one of ordinary skill in the art would have been motivated to combine each primary reference with each of these references for one or more of the reasons outlined in Section I.B of Defendant’s Invalidity Contentions. Mannheimer: 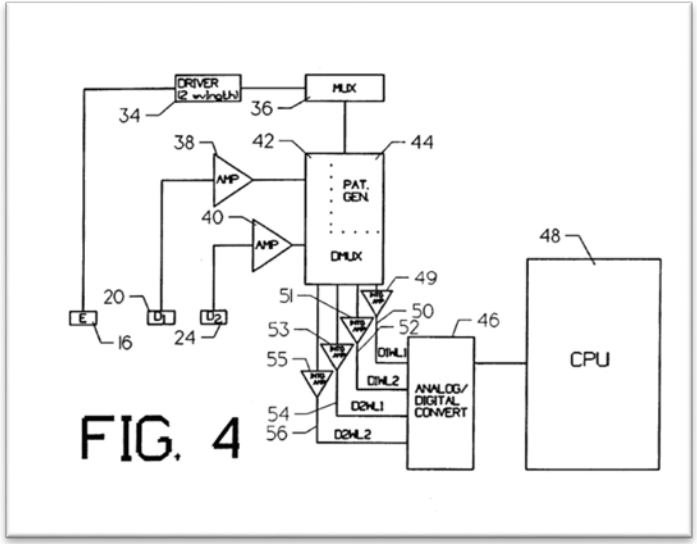 “FIG. 4 is a block diagram showing the entire monitoring and measurement system employing the present invention. According to a first preferred embodiment, multiplexer 36 and two wavelength driver 34 alternately turn on the red and infrared LED's 16 at a desired chop frequency (e.g. 1,600 hz). These red and infrared signals are detected by detectors 20 and 24 and amplified by current-to-voltage amplifiers 38 and

Asserted Claim of ’286 Patent	Combinations
	40. The outputs of transconductance amplifiers 38 and 40 are demultiplexed by DMUX 42 so as to generate a first and second wavelength signal for each of detectors D_1 (20) and D_2 (24), which generated signals are sent through integrating amplifiers 49, 51, 53 and 55 to be placed on, respectively, lines 50, 52, 54 and 56. These first and second wavelength signals are digitized by Analog/Digital Converter 46. The digitized signals are transmitted to CPU 48 for calculating arterial oxygen saturation. A preferred architectural implementation of the control electronics is disclosed in PCT/US94/03546, the disclosure of which is incorporated herein by reference. Alternate control electronics are known in the art and could be used, if desired.” Mannheimer, Col. 6:17-36.
[17] The wearable device of claim 16, wherein at least one LED emits at a first wavelength and at least another LED emits at a second wavelength, and wherein the first wavelength has a first penetration depth into the tissue and wherein the second wavelength has a second penetration depth into the tissue different from the first penetration depth.	To the extent this limitation is not disclosed by any primary reference, it would have been obvious in view of at least Fine, Such, Webster, and Chance. Apple has separately charted each reference against the claims. This limitation also would have been obvious in view of Mannheimer. Exemplary passages from Mannheimer are set forth below. A person of ordinary skill in the art would have found it obvious to configure a device to include at least one LED emits at a first wavelength and at least another LED emits at a second wavelength, and wherein the first wavelength has a first penetration depth into the tissue and wherein the second wavelength has a second penetration depth into the tissue different from the first penetration depth. Those of skill in the art were able to select LEDs of differing and appropriate wavelengths to include in a device. For example, a person of ordinary skill in the art would have found it obvious to configure a device to use an LED in the near-infrared wavelength between 700 nanometers and 2500 nanometers because this was commonly done at the time. That person would have found it obvious to include an LED that emitted light at a different wavelength with a different penetration depth into the tissue, as this is taught by at least Fine, Such, Webster, and Chance. It would have been a matter of routine for one skilled in the art to have selected one or more LEDs of an appropriate wavelength and to have incorporated them into a device, and doing so was well within the skill of those in the art. In addition, one of ordinary skill in the art

Asserted Claim of ’286 Patent	Combinations
	would have been motivated to combine each primary reference with each of these references for one or more of the reasons outlined in Section I.B of Defendant’s Invalidity Contentions. Mannheimer: 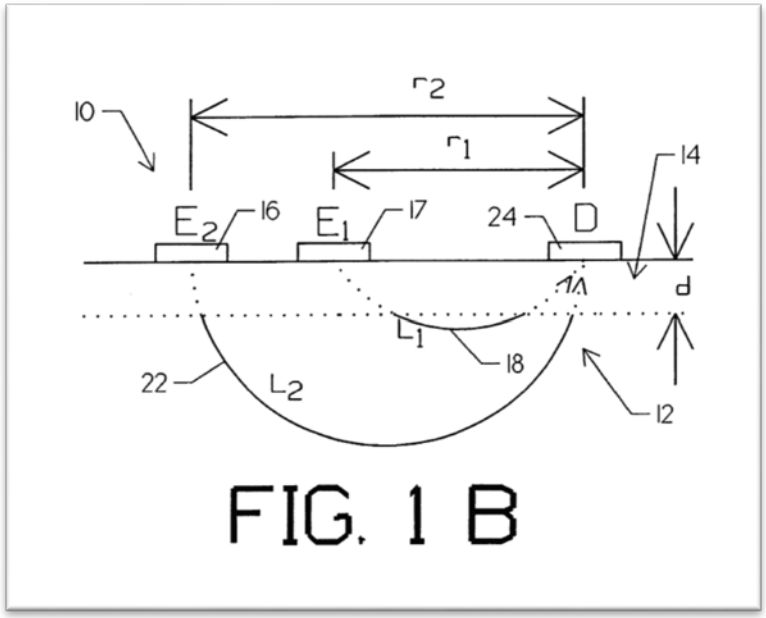 FIG. 1 B “The present invention overcomes the disadvantages found in the prior art by providing a pulse oximetry system for the determination of arterial blood oxygen saturation level at a particular depth of tissue which readily compensates for limitations induced in the prior art systems. Specifically, the present invention allows for pulsed oximetry measurement which isolates arterial saturation levels for particular ranges of tissue layers which rejects saturation levels of the tissue above or below the tissue of interest by utilizing multiple spaced detectors and/or emitters. According to one embodiment of the invention, a sensor for use with a pulse oximeter monitor comprises a patient interface housing for coupling to a patient; at least three sensor areas for

Asserted Claim of ’286 Patent	Combinations
	emitting electromagnetic radiation which penetrates tissue of the patient and detects that electromagnetic radiation scattered by the tissue, a spacing between a first pair of electromagnetic emitter and electromagnetic detector being different than that of a spacing between a second pair of electromagnetic emitter and electromagnetic detector; and means for calculating an arterial oxygen saturation level of the patient in response to the detected electromagnetic radiation. According to two preferred embodiments, the sensor areas comprise first and second separated and spaced apart emitter areas each capable of generating light of at least two distinct wavelengths, and a detector, the first emitter area and the detector corresponding to a first pair of emitter and detector, the second emitter area and the detector corresponding to the second pair of emitter and detector; or the sensor areas comprise first and second detector areas each capable of detecting light of at least two separate wavelength values, and an emitter area capable of generating said light having the at least two separated wavelength values.” Mannheimer, Col. 1:64-2:30. “According to a first preferred embodiment, emitter 16 transmits electromagnetic radiation in the visible and near infrared region at two predetermined wavelengths (e.g. 660 nm and 905 nm). Emitter 16 is shown as a single entity in this example. However, different emitters may be used for the different predetermined wavelengths, if desired. If more than one emitter is used, it is most convenient that they be co-located to simulate a single point source. LED's are a preferred type of emitter. The signals from emitter 16 travel generally along path 18 to a first detector 20 and along path 22 to a second detector 24 as shown. The length of path 18 within layer 12 (with absorption u_b) is shown as L_1 and the length of path 22 within layer 12 is shown as L_2.” Mannheimer, Col. 3:10-22. “FIG. 1B is a schematic diagram, similar to FIG. 1A, showing the present invention employing multiple emitters 16 and 17 and a single detector 24. Those of skill in the art will appreciate that the operation is similar to that described above.” Mannheimer, Col. 5:58-62.
[19] The wearable device of claim 16, wherein the receiver is configured to be synchronized to	*See* CHART ONE: ’533 Patent, Claim Element 5F above.

Asserted Claim of ’286 Patent	Combinations
the modulating of at least one of the LEDs.	
[20] The wearable device of claim 16, wherein the receiver is located a first distance from a first one of the LEDs and a different distance from a second one of the LEDs such that the receiver can capture a third signal from the first LED and a fourth signal from the second LED, and wherein the output signal is generated in part by comparing the third and fourth signals.	*See* CHART ONE: ’533 Patent, Claim Element 8 above.

EXHIBIT A-4

U.S. Patent No. 9,885,698: Obviousness Combinations

To the extent any of the references Apple has charted against the asserted claims of U.S. Patent No. 9,885,698 ("the '698 Patent") do not disclose any of the limitations of those claims, each reference renders those claims obvious alone and/or in view of at least one or more of any of the following references:

- U.S. Patent No. 9,241,676 to Lisogurski et al. ("Lisogurski"). Lisogurski was filed on May 31, 2012, and issued on January 26, 2016. It is prior art under at least 35 U.S.C. §§ 102(a), (b), and (e) (pre-AIA) and 35 U.S.C. § 102(a), (b), (d) (post-AIA).
- U.S. Patent No. 8,172,761 to Rulkov et al. ("Rulkov"). Rulkov was filed on October 4, 2011 and issued on May 8, 2012. It is prior art under at least 35 U.S.C. §§ 102(a), (b), and (e) (pre-AIA) and 35 U.S.C. § 102(a), (b), (d) (post-AIA).
- U.S. Patent No. 7,648,463 to Elhag et al. ("Elhag"). Elhag issued on January 19, 2010. It is prior art under at least 35 U.S.C. §§ 102(a) and (b) (pre-AIA) and 35 U.S.C. § 102(a) and (b) (post-AIA).
- U.S. Patent No. 5,795,300 to Bryars ("Bryars"). Bryars issued on August 18, 1998, and is prior art under at least 35 U.S.C. §§ 102(a) and (b) (pre-AIA) and 35 U.S.C. § 102(a) and (b) (post-AIA).
- U.S. Patent No. 8,954,135 to Yuen et al. ("Yuen"). Yuen was filed on June 24, 2013, claims priority back to June 22, 2012, and issued on February 10, 2015. Yuen is prior art under at least 35 U.S.C. §§ 102(a) and (e) (pre-AIA) and 35 U.S.C. § 102(a) and (d) (post-AIA).
- U.S. Patent No. 6,731,967 to Turcott ("Turcott"). Turcott issued on May 4, 2004, and is prior art under 35 U.S.C. §§ 102(a) and (b) (pre-AIA) and 35 U.S.C. § 102(a) and (b) (post-AIA).
- U.S. Patent No. 8,755,871 to Weng et al. ("Weng"). Weng was filed November 30, 2011, and issued on June 17, 2014. It is prior art under 35 U.S.C. §§ 102(a), (b), and (e) (pre-AIA) and 35 U.S.C. § 102(a), (b), (d) (post-AIA).
- U.S. Patent No. 8,315,682 to Such et al. ("Such"). Such was filed on December 5, 2005, and issued on November 20, 2012. It is prior art under 35 U.S.C. §§ 102(a), (b), and (e) (pre-AIA) and 35 U.S.C. § 102(a), (b), (d) (post-AIA).
- U.S. Patent No. 6,708,048 to Chance ("Chance"). Chance issued on March 16, 2004, and is prior art under 35 U.S.C. §§ 102(a) and (b) (pre-AIA) and 35 U.S.C. § 102(a) and (b) (post-AIA).
- U.S. Patent No. 6,701,170 to Stetson ("Stetson"). Stetson issued on March 2, 2004, and is prior art under 35 U.S.C. §§ 102(a) and (b) (pre-AIA) and 35 U.S.C. § 102(a) and (b) (post-AIA).
- U.S. Patent No. 9,179,876 to Ochs et al. ("Ochs"). Ochs was filed on April 30, 2012, and issued on November 10, 2015. Ochs is prior art under 35 U.S.C. §§ 102(a), (b), and (e) (pre-AIA) and 35 U.S.C. § 102(a), (b), (d) (post-AIA).
- U.S. Patent No. 6,031,603 to Fine et al. ("Fine"). Fine issued on February 29, 2000, and is prior art under 35 U.S.C. §§ 102(a) and (b) (pre-AIA) and 35 U.S.C. § 102(a) and (b) (post-AIA).

- U.S. Patent No. 5,368,224 to Richardson et al. ("Richardson"). Richardson issued on November 29, 1994, and is prior art under 35 U.S.C. §§ 102(a) and (b) (pre-AIA) and 35 U.S.C. § 102(a) and (b) (post-AIA).
- U.S. Patent No. 5,746,206 to Mannheimer ("Mannheimer"). Mannheimer issued on May 5, 1998 and is prior art under 35 U.S.C. §§ 102(a) and (b) (pre-AIA) and 35 U.S.C. § 102(a) and (b) (post-AIA).
- U.S. Appl. Pub. No. 2005/0049468 to Carlson et al. ("Carlson"). Carlson was published on March 3, 2005, and is prior art under 35 U.S.C. §§ 102(a) and (b) (pre-AIA) and 35 U.S.C. § 102(a) and (b) (post-AIA).
- U.S. Appl. Pub. No. 2005/0209516 to Fraden ("Fraden"). Fraden was published on September 22, 2005, and is prior art under 35 U.S.C. §§ 102(a) and (b) (pre-AIA) and 35 U.S.C. § 102(a) and (b) (post-AIA).
- JP Appl. No. 2005270544 to Maekawa et al. ("Maekawa"). Maekawa was published on October 6, 2005, and is prior art under 35 U.S.C. §§ 102(a) and (b) (pre-AIA) and 35 U.S.C. § 102(a) and (b) (post-AIA).
- A Wearable Reflectance Pulse Oximeter for Remote Physiological Monitoring by Y. Mendelson ("Mendelson"). Mendelson was published in the Proceedings of the 28th IEEE EMBS Annual International Conference in 2006. It is prior art under 35 U.S.C. §§ 102(a) and (b) (pre-AIA) and 35 U.S.C. § 102(a) and (b) (post-AIA).
- A wireless reflectance pulse oximeter with digital baseline control for unfiltered photoplethysmograms by K. Li & S. Warren ("Li"). Li was published in 2012 in IEEE Transactions on Biomedical Circuits and Systems, 6(3), 269-278. It is prior art under 35 U.S.C. §§ 102(a) and (b) (pre-AIA) and 35 U.S.C. § 102(a) and (b) (post-AIA).
- Design of Pulse Oximeters by Webster ("Webster"). Webster was published by Institute of Physics Publishing in 1997. It is prior art under 35 U.S.C. §§ 102(a) and (b) (pre-AIA) and 35 U.S.C. § 102(a) and (b) (post-AIA).
- "Mobile monitoring with wearable photoplethysmographic biosensors" by Asada et al. ("Asada 2003"). Asada 2003 was published in IEEE Engineering in Medicine and Biology Magazine in May/June 2003. It is prior art under 35 U.S.C. §§ 102(a) and (b) (pre-AIA) and 35 U.S.C. § 102(a) and (b) (post-AIA).
- Rhee et al., Artifact-Resistant Power-Efficient Design of Finger-Ring Plethsymographic Sensors," IEEE Transactions on Biomedical Engineering, Vol. 48, No. 7 (July 2001) ("Asada 2001"). Asada 2001 was published in IEEE Transactions on Biomedical Engineering in July 2001. It is prior art under 35 U.S.C. §§ 102(a) and (b) (pre-AIA) and 35 U.S.C. § 102(a) and (b) (post-AIA).
- Asada, The MIT Ring: History, Technology, and Challenges of Wearable Health Monitoring, MIT Industrial Liaison Program 2010 R&D Conference ("Asada 2010"). Asada 2010 was published and/or publicly presented at least as early as November 16, 2010 at the MIT Industrial Liaison Program 2010 R&D Conference. It is prior art under 35 U.S.C. §§ 102(a) and (b) (pre-AIA) and 35 U.S.C. § 102(a) and (b) (post-AIA).
- TAOS TSL260 Datasheet and TSL260 & TSL261 products ("TAOS"). It is prior art under 35 U.S.C. §§ 102(a) and (b) (pre-AIA) and 35 U.S.C. § 102(a) and (b) (post-AIA).
- The Root, Radius-7, Radical-7, Radical-8, and certain pulse oximeters and pulse oximetry sensors manufactured by Masimo ("Masimo"). It is prior art under 35 U.S.C. §§ 102(a) and (b) (pre-AIA) and 35 U.S.C. § 102(a) and (b) (post-AIA).

- The iSpO2 pulse oximeter manufactured by Masimo ("Masimo iSpO2"). It is prior art under 35 U.S.C. §§ 102(a) and (b) (pre-AIA) and 35 U.S.C. § 102(a) and (b) (post-AIA).
- The WristOx pulse oximeter and certain pulse oximeters and pulse oximetry sensors manufactured by Nonin Medical ("Nonin Medical"). It is prior art under 35 U.S.C. §§ 102(a) and (b) (pre-AIA) and 35 U.S.C. § 102(a) and (b) (post-AIA).
- The OxiMax, NPB-40, N-550, and certain pulse oximeters and pulse oximetry sensors manufactured by Nellcor ("Nellcor"). It is prior art under 35 U.S.C. §§ 102(a) and (b) (pre-AIA) and 35 U.S.C. § 102(a) and (b) (post-AIA).
- The FitBit One manufactured by FitBit ("FitBit One"). It is prior art under 35 U.S.C. §§ 102(a) and (b) (pre-AIA) and 35 U.S.C. § 102(a) and (b) (post-AIA).
- The FitBit Charge HR manufactured by FitBit ("FitBit Charge HR"). It is prior art under 35 U.S.C. §§ 102(a) and (b) (pre-AIA) and 35 U.S.C. § 102(a) and (b) (post-AIA).
- The Adidas miCoach Smart Run GPS watch and other heart rate monitors manufactured by Adidas ("Adidas"). They are prior art under 35 U.S.C. §§ 102(a) and (b) (pre-AIA) and 35 U.S.C. § 102(a) and (b) (post-AIA).

Apple has separately charted most of the above references against the asserted claims, and the exemplary passages of each reference appear in that references claim chart. For any references not separately charted, exemplary passages appear in the chart below.

For each dependent claim, the disclosures cited for the claim from which it depends are incorporated by reference. For each combination identified below, exemplary rationales to combine are set forth, and additional reasons why a person of ordinary skill in the art would have made that combination are identified in Section I.B of Apple's Invalidity Contentions.

CHART FOUR: U.S. Patent No. 9,885,698: Obviousness Combinations

Asserted Claim of ’698 Patent	Combinations
[1] A wearable device, comprising:	*See* CHART ONE: ’533 Patent, Claim Elements 5 and 13A above.
[1A] a measurement device including a light source comprising a plurality of light emitting diodes (LEDs) for measuring one or more physiological parameters,	*See* CHART ONE: ’533 Patent, Claim Element 13A above.
[1B] the measurement device configured to generate, by modulating at least one of the LEDs having an initial light intensity, an input optical beam having one or more optical wavelengths,	*See* CHART TWO: ’040 Patent, Claim Element 1B above.
[1C] wherein at least a portion of the one or more optical wavelengths is a near-infrared wavelength between 700 nanometers and 2500 nanometers;	*See* CHART ONE: ’533 Patent, Claim Element 5B above.
[1D] the measurement device comprising one or more lenses configured to receive and to deliver a portion of the input optical beam to tissue, wherein the tissue reflects at least a	*See* CHART ONE: ’533 Patent, Claim Element 5D above.

Asserted Claim of ’698 Patent	Combinations
portion of the input optical beam delivered to the tissue;	
[1E] the measurement device further comprising a receiver, wherein the receiver includes a plurality of spatially separated detectors, the detectors configured to: capture light while the LEDs are off and convert the captured light into a first signal; and capture light while at least one of the LEDs is on and convert the captured light into a second signal, the captured light including at least a portion of the input optical beam reflected from the tissue;	*See* CHART TWO: ’040 Patent, Claim Element 1F and CHART THREE: ’286 Patent, Claim Element 16J above.
[1F] wherein at least one analog to digital converter is coupled to the spatially separated detectors and is configured to generate at least a first data signal from the first signal and at least a second data signal from the second signal;	*See* CHART TWO: ’040 Patent, Claim Element 1F and CHART THREE: ’286 Patent, Claim Element 16K above.
[1G] the measurement device configured to improve a signal-to-	*See* CHART ONE: ’533 Patent, Claim Element 10 and CHART TWO: ’040 Patent, Claim Element 1G above.

Asserted Claim of ’698 Patent	Combinations
noise ratio of the input optical beam reflected from the tissue by differencing the first data signal and the second data signal to generate an output signal representing at least in part a non-invasive measurement on blood contained within the tissue; and	
[1H] wherein the modulating at least one of the LEDs has a modulation frequency, and wherein the receiver is configured to use a lock-in technique that detects the modulation frequency.	To the extent this limitation is not disclosed by any primary reference, it would have been obvious in view of at least Lisogurski, Carlson, Elhag, Turcott, Rulkov, Nonin Medical, Masimo, Masimo iSpO2, FitBit Charge HR, Adidas, and Nellcor. Apple has separately charted each reference against the claims. A person of ordinary skill in the art would have found it obvious to configure a device to include a receiver that is configured to use a lock-in technique that detects the modulation frequency. Enabling the receiver to synchronize or lock-in to the modulation frequency of the light source allows the receiver to take any parameters of the signal into account when processing the detected signal. For example, synchronization could allow the receiver to take into account the modulation, intensity, modulation frequency, pulse width, wavelength, and whether the light source was on or off. It also allows the receiver to filter out noise or other signals that occur at a different frequency. A person of ordinary skill in the art would have understood that it was common practice to use a receiver that includes a lock-in technique, and this is taught by at least Lisogurski, Carlson, Elhag, Turcott, Rulkov, Nonin Medical, Masimo, Masimo iSpO2, FitBit Charge HR, Adidas, and Nellcor. It would have been a matter of routine for one skilled in the art to have included this feature, and doing so was well within the skill of those in the art. In addition, one of ordinary skill in the art would have been motivated to combine each primary reference with each of these references for one or more of the reasons outlined in Section I.B of Defendant’s Invalidity Contentions.
[2] The wearable device of claim 1, wherein the plurality of LEDs	To the extent this limitation is not disclosed by any primary reference, it would have been obvious in view of at least Fraden, Yuen, Chance, Fine, Stetson, Lisogurski, Asada 2003, Nonin Medical,

Asserted Claim of ’698 Patent	Combinations
and the plurality of spatially separated detectors are mounted on a common structure, and wherein the plurality of LEDs are coupled electrically to a power supply.	Masimo, Masimo iSpO2, FitBit Charge HR, Adidas, and Nellcor. Apple has separately charted each reference against the claims. A person of ordinary skill in the art would have found it obvious to configure a device to include a plurality of spatially separated detectors mounted on a common structure and wherein the plurality of LEDs are coupled electrically to a power supply. This configuration was well-known in the art, and is taught by at least Fraden, Yuen, Chance, Fine, Stetson, Lisogurski, Asada 2003, Nonin Medical, Masimo, Masimo iSpO2, FitBit Charge HR, Adidas, and Nellcor. It was well-known to those in the art that this configuration provided benefits, including by allowing selection of different LEDs and sensors for different placements on a user’s body, correction of different noise sources, selection of different LEDs and sensors depending on the type of noise detected in the signal, allowing multiple measurement points, and increasing sensor accuracy. It would have been a matter of routine for one skilled in the art to have configured a device to include this feature, and doing so was well within the skill of those in the art. In addition, one of ordinary skill in the art would have been motivated to combine each primary reference with each of these references for one or more of the reasons outlined in Section I.B of Defendant’s Invalidity Contentions.
[3] The wearable device of claim 1, wherein the light source is configured to further improve the signal-to-noise ratio of the input beam reflected from the tissue by increasing the light intensity relative to the initial light intensity from at least one of the LEDs, and wherein the receiver is configured to be synchronized to at least one of the LEDs.	*See* CHART ONE: ’533 Patent, Claim Elements 5C and 5F above.
[5] The wearable device of claim 1, wherein the wearable device is configured to communicate with a	*See* CHART ONE: ’533 Patent, Claim Elements 5G, 5H, 5I, and 5J above.

Asserted Claim of ’698 Patent	Combinations
smart phone or tablet, the smart phone or tablet comprising a wireless receiver, a wireless transmitter, a display, a voice input module, a speaker, and a touch screen, the smart phone or tablet configured to receive and to process at least a portion of the output signal, wherein the smart phone or tablet is configured to store and display the processed output signal, wherein at least a portion of the processed output signal is configured to be transmitted over a wireless transmission link.	