UNITED STATES PATENT AND TRADEMARK OFFICE

BEFORE THE PATENT TRIAL AND APPEAL BOARD

_____

SAMSUNG ELECTRONICS CO., LTD.,
SAMSUNG ELECTRONICS AMERICA, INC.,
FOSSIL GROUP, INC.,
FOSSIL STORES I, INC.,
FOSSIL PARTNERS, L.P.,
OURA HEALTH OY, AND
ONEPLUS TECHNOLOGY (SHENZHEN) CO., LTD.

Petitioners,

v.

OMNI MEDSCI, INC.,

Patent Owner.

_____

Case IPR2025-01249
Patent No. 9,055,868

_____

PETITION FOR *INTER PARTES* REVIEW

TABLE OF CONTENTS

Page

I. INTRODUCTION 1
II. MANDATORY NOTICES UNDER 37 C.F.R. §42.8 3
A. Real Party-in-Interest 3
B. Related Matters 3
C. Lead and Back-Up Counsel 4
III. PAYMENT OF FEES 5
IV. REQUIREMENTS FOR *INTER PARTES* REVIEW 6
A. Grounds for Standing 6
B. Identification of Challenge 6
1. The Specific Art on Which the Challenge Is Based 6
2. Statutory Grounds on Which the Challenge Is Based 7
V. '868 PATENT AND PROSECUTION HISTORY 7
A. '868 Patent 7
B. Prosecution History 11
VI. §325(d) AND §314(a) DISCRETION DOES NOT APPLY 13
A. §325(d) 13
B. §314(a) 14
VII. LEVEL OF ORDINARY SKILL IN THE ART 17
VIII. CLAIM CONSTRUCTION 17
A. Means-Plus-Function Terms 18
IX. GROUNDS OF UNPATENTABILITY 19
A. Ground 1: Mault (Claims 7, 10-11, 14) 19
1. Overview of Mault (Ex.1004) 19
2. Claim Chart 22
B. Ground 2: Mault in view of Mitsui (Claim 9) 46
C. Grounds 3-4: Grounds 1-2 in view of Pologe (Claims 7-11, 14) 51

1. Overview of Pologe 51
2. Motivation to Combine Mault with Pologe 52
3. Claim Mappings 56
D. Grounds 5-8: Grounds 1-4 in view of Kiani (Claims 7-11, 13-14) 61
1. Element [7.e] 61
2. Claim 13 67
X. SECONDARY CONSIDERATIONS 68
XI. CONCLUSION 69

EXHIBIT LIST

Exhibit No.	DESCRIPTION
1001	U.S. Patent No. 9,055,868 ("'868")
1002	File History of U.S. Application No. 17/078,771 ("'868FH")
1003	Declaration of Brian Anthony in Support of Petition for *Inter Partes* Review of U.S. Patent No. 9,055,868 ("Anthony")
1004	U.S. Patent Pub. No. 2003/0208113 ("Mault")
1005	JP Publication No. 2000074829A (Certified English Translation) ("Mitsui")
1006	U.S. Patent No. 5,891,022 ("Pologe")
1007	U.S. Patent No. 6,526,300 ("Kiani")
1008	U.S. Patent No. 5,377,674 ("Kuestner")
1009	U.S. Patent No. 4,244,045 ("Nosu")
1010	U.S. Patent No. 6,067,463 ("Jeng")
1011	U.S. Patent No. 6,049,727 ("Crothall")
1012	U.S. Patent No. 5,660,163 ("Schulman")
1013	Defendants' Supplemental Invalidity and Subject Matter Eligibility Contentions, July 18, 2025. *Omni MedSci, Inc. v. Samsung Electronics Co.*, Ltd. et al., No. 2:24-cv-01070-JRG-RSP (E.D. Tex.)
1014	*Omni MedSci, Inc. v. Apple Inc.*, 2:18-cv-00134-RWS, Dkt. No. 211 (E.D. Tex. June 24, 2019) ("CC Order")
1015	*Apple Inc. v. Omni Medsci, Inc.*, No. IPR2019-00916, Paper 1 (P.T.A.B. Apr. 10, 2019) ("'533-Pet.")
1016	*Apple Inc. v. Omni Medsci, Inc.*, No. IPR2019-00916, Paper 39 (P.T.A.B. Oct. 14, 2020) ("'533-FWD")
1017	Declaration of Brian Anthony in Support of Apple Inc.'s Petition for *Inter Partes* Review of U.S. Patent No. 9,651,533 submitted in IPR2019-00916, Ex.1015 ("'533-Anthony")

Exhibit No.	DESCRIPTION
1018	U.S. Patent No. 6,757,001 ("Allport")
1019	U.S. Patent No. 6,641,533 ("Causey")
1020	Second Amended Docket Control Order, June 16, 2025. *Omni MedSci, Inc. v. Samsung Electronics Co.*, Ltd. et al., No. 2:24-cv-01070-JRG-RSP (E.D. Tex.)
1021	U.S. Patent No. 6,727,930 ("Currans")
1022	U.S. Patent No. 3,609,475 ("Kaposhilin")
1023	U.S. Patent No. 7,020,508 ("Stivoric")
1024	JP Publication No. 2000074829 (Original Japanese Publication)
1025	U.S. Patent No. 6,597,345 ("Hirshberg")
1026	U.S. Provisional Patent App. No. 60/212,319
1027	*Apple Inc. v. Omni Medsci, Inc.*, No. IPR2021-00453, Paper 1 (P.T.A.B. Jan. 22, 2021) ("'484-Pet.")
1028	*Apple Inc. v. Omni Medsci, Inc.*, No. IPR2021-00453, Paper 22 (P.T.A.B. Aug. 3, 2022) ("'484-FWD")
1029	Reserved
1030	Declaration of Brian Anthony in Support of Petition for *Inter Partes* Review of U.S. Patent No. 10,517,484 submitted in IPR2021-00453, Ex.1027 ("'484-Anthony")
1031	U.S. Patent No. 5,544,357 ("Huei")
1032	U.S. Patent No. 4,817,050 ("Komatsu")
1033	E.F. Schubert, Light-Emitting Diodes (Cambridge Univ. Press, 2nd ed. reprinted 2014)
1034	Joseph D. Bronzino, "The Biomedical Engineering Handbook," (1995)
1035	U.S. Patent No. 5,122,943 ("Pugh")
1036	U.S. Patent No. 6,661,167 ("Eliashevich")

Exhibit No.	DESCRIPTION
1037	U.S. Patent No. 7,001,058 ("Inditsky")
1038	U.S. Patent No. 6,424,851 ("Berman")
1039	U.S. Patent No. 9,651,533 ("'533")
1040	U.S. Patent No. 10,517,484 ("'484")
1041	Declaration of Jonathan Bradford in Support of Petition for *Inter Partes* Review of U.S. Patent No. 9,055,868

TABLE OF ABBREVIATIONS

Abbreviation	DESCRIPTION
Claims / Challenged Claims	Claims 7-11, 13-14 of the ’868
IPR	*Inter Partes* Review
Petitioners	Petitioners Samsung Electronics Co. Ltd., Samsung Electronics America Inc., Fossil Group, Inc., Fossil Stores I, Inc., Fossil Partners, L.P., Oura Health Oy, and OnePlus Technology (Shenzhen) Co., Ltd.
PO	Patent Owner
POSITA	Person of Ordinary Skill in the Art
Board	Patent Trial and Appeal Board
EDTX	Eastern District of Texas
Texas Case	*Omni MedSci, Inc. v. Samsung Electronics Co., Ltd. et al.*, No. 2:24-cv-01070-JRG-RSP (E.D. Tex.)

LIST OF CHALLENGED CLAIMS

[7.pre] A diagnostic system comprising:

[7.a] a light source comprising: one or more semiconductor diodes generating an input light beam; and

[7.b] a lens system configured to receive at least a portion of the input light beam and to communicate at least the portion of the input light beam onto a part of a user's body comprising blood, wherein at least the portion of the input light beam is used in a measurement on a user;

[7.c] a software application capable of generating data based at least in part on the measurement on the user, wherein the data represents at least in part physiological information associated with the user;

[7.d] the software application capable of operating on a control system adapted to receive, store and process at least a portion of the physiological information,

[7.e] the control system having a touch-screen, circuitry for obtaining position information from a location sensor, and a wireless transceiver to transmit wireless data over a wireless link, the wireless data comprising at least a part of the physiological information, wherein the control system is further capable of receiving voice input signals and manually entered input signals; and

[7.f] a host comprising: a digital file for receiving and storing at least a portion

of the wireless data; control logic at the host to process at least the portion of the wireless data to generate a status of the user; a memory storage device for recording the status; and an output for communicating at least a portion of the status or associated information over a communication link to one or more display output devices, wherein the one or more display output devices are located remotely from the host.

[8] The diagnostic system of claim 7, wherein the light source comprises a plurality of semiconductor diodes that are further coupled to a multiplexer capable of combining the plurality of semiconductor diodes and generating the input light beam comprising one or more wavelengths.

[9] The diagnostic system of claim 7, wherein at least the portion of the input light beam is adapted for use in a diagnostics to measure a property of the blood, wherein the diagnostics comprise a spectroscopic procedure, wherein the spectroscopic procedure is based at least in part on a comparison of amplitudes at a plurality of associated wavelengths transmitted or reflected from the blood.

[10] The diagnostic system of claim 7, wherein the control system is further coupled to a headset or a heads-up display.

[11] The diagnostic system of claim 7, wherein the control logic includes voice recognition software to process at least a portion of the voice input signals, and wherein the control system further comprises a voice recognition module.

[13] The diagnostic system of claim 7, wherein the control system is further coupled to a proximity sensor.

[14] The diagnostic system of claim 7, wherein the control system is further coupled to an audio output device capable of communicating at least a part of the processed portion of the physiological information.

Pursuant to §§311-319 and §42.1,[1] Samsung Electronics Co. Ltd., Samsung Electronics America Inc., Fossil Group, Inc., Fossil Stores I, Inc., Fossil Partners, L.P., Oura Health Oy, and OnePlus Technology (Shenzhen) Co., Ltd. ("Petitioners") respectfully petition for *inter partes* review of claims 7-11, 13-14 ("Claims" or "Challenged Claims") of U.S. Patent No. 9,055,868 (Ex.1001, "'868"). There is a reasonable likelihood—and it is highly likely—that at least one challenged claim is unpatentable as explained herein. Petitioners request review of the Claims and judgment finding them unpatentable under §103.

I. INTRODUCTION

The '868 patent's purported invention relates to "a waveguide structure" "implemented in a medical device" that "uses optical signal wavelengths" to "perform surgery and/or spectroscopy on a patient" to detect cancerous tissue. *E.g.*, '868, 17:3-18:41, Figs. 6A, 6B. At a high level, the Challenged Claims (7-11, 13-14) broadly recite a diagnostic system comprising a light source that uses output light beams to perform measurements on a user that are transmitted to and processed by software on a control system and a host. '868, 1:39-2:4, 5:44-55, 9:39-10:13,

[1] Section cites are to 35 U.S.C. (pre-AIA) or 37 C.F.R. as context indicates. All emphasis/annotations added unless noted. Figure annotations herein generally quote the Claims for reference. Citations herein are exemplary and not meant to be limiting.

24:35-25:20, 25:25-30. Anthony, ¶43.

But such diagnostic systems were already well known in the art. For example, before the '868, **Mault** disclosed "using at least one semiconductor laser or light emitting diode" to measure a user's "blood glucose levels" and sending these measurements to a "personal digital assistant (PDA) [with] a software program" as well as a "remote server system" for processing. Mault, [0014]-[0015], [0020]-[0021], [0077], [0079]. Anthony, ¶44.

The additional limitations in claims 8-11, and 13-14 add nothing new. They merely recite known features, such as a common spectroscopic technique for performing physiological measurements, a multiplexer, a headset, an audio output device, and using a proximity sensor, which were already disclosed in **Mault** and/or other art, as discussed below. *See* §IX. Anthony, ¶¶45-46.

In addition to the fact that the references relied on herein were not considered by the examiner during prosecution, the examiner's Notice of Allowance relied on the following limitation (recited in claim 1) as a reason for allowance, when it does not appear in the Challenged Claims: "one or more waveguide structures configured to receive at least a portion of the one or more wavelengths and to communicate at least the portion of the one or more wavelengths to an output end of the one or more waveguide structures to form an output beam." Ex. 1002 ('868FH), 182-183. Anthony, ¶¶54-59.

Accordingly, Petitioners request that the Patent Trial and Appeal Board ("Board") institute trial and find the Challenged Claims unpatentable.

II. MANDATORY NOTICES UNDER 37 C.F.R. §42.8

A. Real Party-in-Interest

Petitioners Samsung Electronics Co. Ltd., Samsung Electronics America, Inc., Fossil Group, Inc., Fossil Stores I, Inc., Fossil Partners, L.P., Oura Health Oy, and OnePlus Technology (Shenzhen) Co., Ltd., in addition to Ouraring, Inc. and Guangdong OPPO Mobile Telecommunications Corp., Ltd., are the real parties-in-interest. No other party had access to or control over the present Petition, and no other party funded or participated in preparation of the present Petition.

B. Related Matters

The '868 is the subject of the following co-pending cases:

- *Omni Medsci, Inc. v. Samsung Electronics. Co., Ltd. et al.*, 2:24-cv-01070-JRG-RSP (E.D. Tex.) ("Texas Case");
- *Omni MedSci, Inc. v. Whoop, Inc.*, 1:25-cv-00140-JLH (D. Del.); and

Petitioners are also concurrently filing a petition for IPRs of U.S. Patent Nos. 9,651,533 (IPR2025-01250), 10,874,304 (IPR2025-01251), 11,160,455 (IPR2025-01252), 12,193,790 (IPR2025-01253), 12,268,475 (IPR2025-01254) asserted in the Texas Case, and petitions for PGR of U.S. Patent Nos. 12,268,475 (PGR2025-00063) and 12,193,790 (PGR2025 00064).

C. Lead and Back-Up Counsel

Lead Counsel	Backup Counsel
James L. Davis, Jr. Reg. No. 57,325 **ROPES & GRAY LLP** 525 University Avenue, 8th Floor Palo Alto, CA 94301 Phone: +1-650-617-4000 Fax: +1-617-235-9492 james.l.davis@ropesgray.com Samsung-Omni-Ropes-IPR-Service@ropesgray.com **Mailing address for all PTAB correspondence:** ROPES & GRAY LLP IPRM—Floor 43 Prudential Tower 800 Boylston Street Boston, Massachusetts 02199-3600	Hyun-Joong Kim Reg. No. 79,936 **ROPES & GRAY LLP** 1211 Avenue of the Americas New York, NY 10036 Phone: +1 212-596-9000 Fax: +1-617-235-9492 Daniel.Kim@ropesgray.com Frances Zhang Reg. No. 73,589 **ROPES & GRAY LLP** 2099 Pennsylvania Avenue, N.W. Washington, DC 20006-6807 Phone: +1-202-508-4600 Fax: +1-617-235-9492 frances.zhang@ropesgray.com
	Jasjit S. Vidwan Reg. No. 72,080 **MAYER BROWN LLP** 1999 K Street, NW Washington, DC 20006-1101 Tel.: 202.263.3065 JVidwan@mayerbrown.com Robert G. Pluta Reg. No. 50,970 **MAYER BROWN LLP** 71 S. Wacker Drive Chicago, IL 60606 Tel.: 312.701.8641 RPluta@mayerbrown.com

Lead Counsel	Backup Counsel
	Jared A. Smith Reg. No. 73,749 **FISH & RICHARDSON P.C.** 12860 El Camino Real, Suite 400 San Diego, CA 92130 Phone: +1 858-678-4702 Fax: +1 858-678-5099 jasmith@fr.com Ricardo J. Bonilla Reg. No. 65,190 **FISH & RICHARDSON P.C.** 1717 Main Street, Suite 5000 Dallas, TX 75201 Phone: +1 214-760-6150 Fax: +1 214-747-2091 rbonilla@fr.com
	Jack Shaw Reg. No. 72,262 **CHERRY JOHNSON SIEGMUND JAMES PC** 8140 Walnut Hill Lane, Suite 105 Dallas, Texas 75231 Tel: 254-732-2242 Fax: 866-627-3509 jshaw@cjsjlaw.com

Petitioners consent to electronic service of documents to the email addresses identified above.

III. PAYMENT OF FEES

The undersigned authorizes the Office to charge the fee required by §42.15(a) and any additional fees that might be due to Deposit Account No. 18-1945, under Order No. 110797-0060-651.

IV. REQUIREMENTS FOR *INTER PARTES* REVIEW

A. Grounds for Standing

Pursuant to §42.104(a), Petitioners certify the '868 is available for IPR. Petitioners and any real parties-in-interest are not barred or estopped from requesting IPR challenging the Claims on the grounds identified herein.

B. Identification of Challenge

Pursuant to §§42.104(b) and (b)(1), Petitioners request IPR of the Claims and that the Board cancel the same as unpatentable.

1. The Specific Art on Which the Challenge Is Based

Petitioners rely upon the following art (Anthony, ¶¶70-71):

Name	Ex.	Publication	Filed	Published/ Issued	Prior art under at least
Mault	1004	US 2003/0208113	7/18/2001	11/6/2003	§102(e)
Mitsui	1005	JP 2000074829A	9/2/1998	3/14/2000	§102(b)
Pologe	1006	US 5,891,022	9/25/1996	4/6/1999	§102(b)
Kiani	1007	US 6,526,300	6/16/2000	2/25/2003	§102(e)

Each of the above references is prior art to the Claims based on 9/3/2002, the

earliest provisional application priority date listed in the '868's priority claim.[2]

2. Statutory Grounds on Which the Challenge Is Based

Ground	Claim(s)	Basis	References
1	7, 10-11, 14	§103	**Mault**
2	9		**Mault** in view of **Mitsui**
3-4	7-11, 14		**Grounds 1-2** in view of **Pologe**
5-8	7-11, 13-14		**Grounds 1-4** in view of **Kiani**

Anthony, ¶¶72, 79-187.

V. '868 PATENT AND PROSECUTION HISTORY

A. '868 Patent

As previewed above (Section I), the Challenged Claims relate to an embodiment of the '868 patent involving "an optical signal wavelength in the mid-IR range … used to perform a medical procedure for the early detection of tissue abnormalities such as cancer cells." '868, 18:24-41; Figs. 9C. Anthony, ¶47.

For example, Figure 9C of the '868 patent illustrates a laser "**pump source 940**" used for "generating an optical signal wavelength in the mid-IR range" "for the

[2] If AIA applies, these references are prior art under §102(a)(1) and/or §102(a)(2) for the same reason. Petitioners take no position as to the appropriate priority date of the '868. Anthony, ¶¶4-8, 60-63.

early detection of … cancer" ('868, 17:34-36, 18:24-41). '868, Fig. 9C.

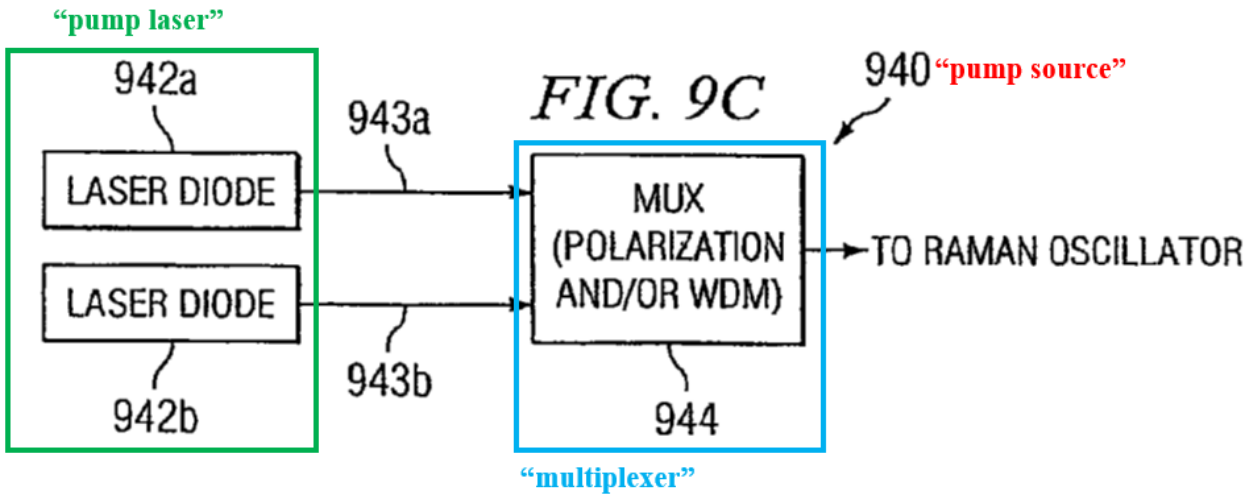

The "**pump source 940**" contains a "pump laser 942" with **"two laser diodes," 942a and 942b**. '868, 22:56-23:9, Fig. 9C. The **laser diodes 942a and 942b** "generat[e] pump signals 943a and 943b," "each centered at a desired wavelength." '868, 22:56-23:9. Anthony, ¶49.

The **pump source 940** also includes a "**multiplexer 944**" ("MUX"). '868, 22:56-23:9, Figs. 9A-9C; Fig. 9C. "**Multiplexer 944** can comprise any device capable of combining pump signals 943, such as a wavelength division multiplexer" ("WDM"). '868, 23:5-7; Fig. 9C. For example, "**multiplexer 944**" is capable of "wavelength multiplexing pump signals 943a and 943b to form a pump output signal," which is then sent to a "Raman wavelength shifter and/or a Raman oscillator" which includes a "lens on the delivery fiber for improved focusing of optical signal[s] on the patient" to "perform a medical procedure for the early detection of … cancer," such as "spectroscopic measurement[s]." '868, 18:24-44, 22:56-58, 23:10-25, Fig.

9C. For example, "differential spectroscopy" may be performed, which involves taking "measurements…at several wavelengths" and "compar[ing]" them "to each other." '868, 2:34-45, 18:33-48. According to the '868 patent, "measuring the differential transmission of the tissue at two or more wavelengths, such as 5 microns and 6.1 microns may: improve the signal-to-noise ratio of the cancer cell signature." '868, 18:48-51. Anthony, ¶50.

Separately, the '868 patent discusses how a medical device may be remotely controlled to perform medical procedures. '868, 9:39-50. As shown in annotated Figure 2 below, "**medical device control system 300**" includes a "**medical device 210**," which "communicate[s] data" over "**communication link 305**" to a "**system 150**," and a "**host 270**," which is "capable of collecting, entering, processing, storing, retrieving, amending, and/or dispatching medical data." '868, 7:22-38, 9:39-50, 9:65-10:13, 10:28-43, Fig. 2. For example, in one embodiment, the "medical device 10 may comprise one or more sensors … capable of detecting when medical device 10 is in close proximity to and/or in contact with tissue" to assist the "medical professional and/or controller" with remotely operating the device. '868, 6:14-31. Anthony, ¶51.

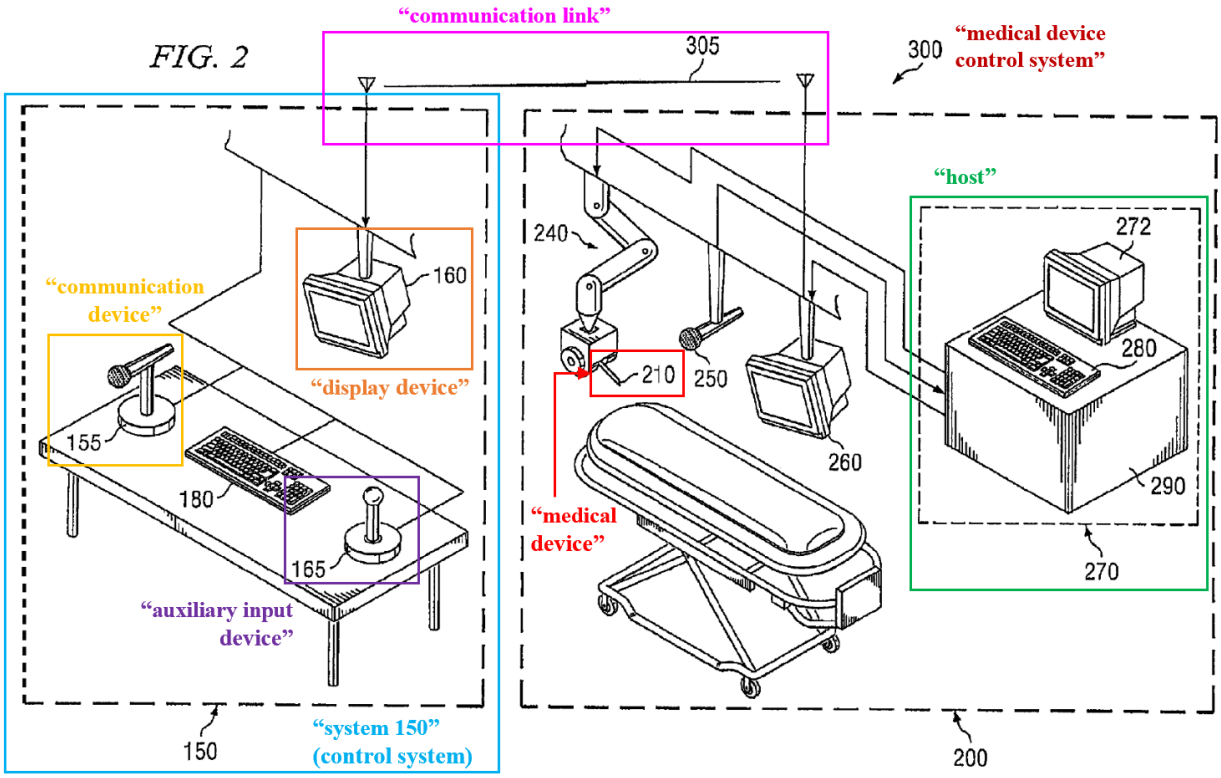

'868, Fig. 2. Anthony, ¶51.

System 150 also includes a "**communication device 155**" through which a user can input "voice instructions," an "**auxiliary input device 165**," such as a "joystick, a computer mouse, … [or] touchscreens," and a "**display device 160**." 9:39-50, Figs. 2, 4. Anthony, ¶52.

For example, Figure 4 of the '868 patent illustrates a "block diagram illustrating a flow of command signals from a medical professional to a medical device in a **medical device control system 500**" in which the "**medical device control system 500** can be substantially similar to … **control system 300** of FIG. 2" and includes an "**auxiliary input device 585** … substantially similar to the

structure and function of **auxiliary input devices 165**," a "**communication device 550**" (like "**communication device 155**"), and a "**display device 580**" (like "**display device 160**"). '868, 14:22-38, 15:38-42, 15:67-16:3. Additionally, the '868 patent also describes an "**audio output device 587** capable of communicating data associated with **medical device 570**…. such as a speaker." '868, 15:49-61, Fig. 4. Anthony, ¶53.

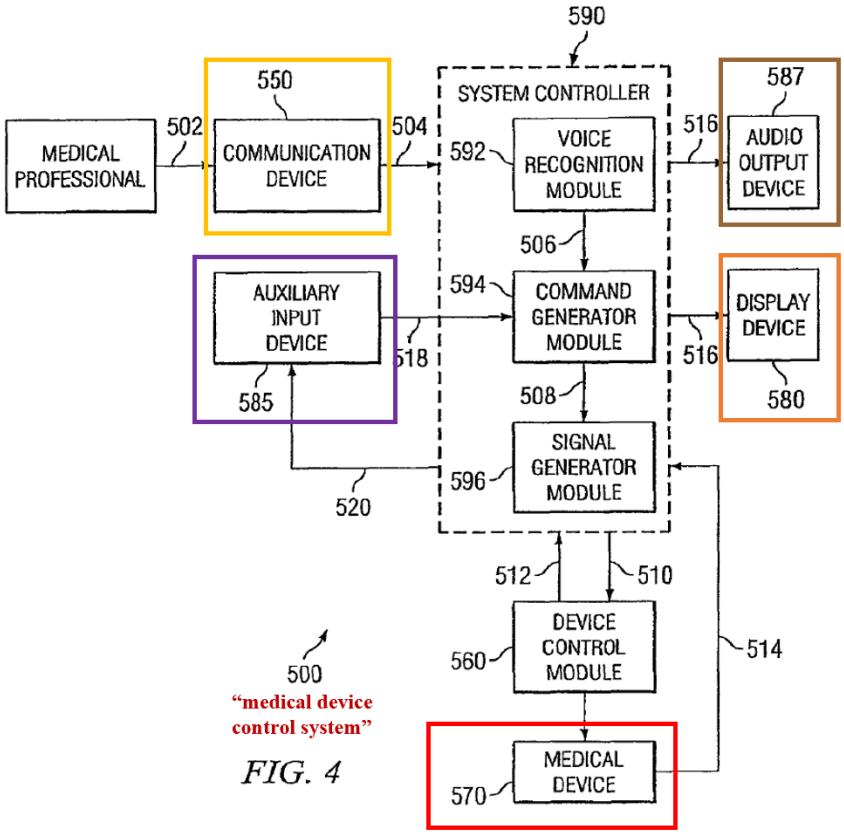

FIG. 4

'868, Fig. 4. Anthony, ¶53.

B. Prosecution History

The '868 issued from U.S. Pat. App. 14/476,082 ("'082-App."), filed 9/3/2014 which claims priority through a series of continuations to provisional application

U.S. Prov. Pat. App. 60/408,025, filed 9/3/2002. The claims were allowed as filed, and the Examiner issued no prior art rejections during prosecution. Anthony, ¶¶54-55.

In issuing the Notice of Allowance, the Examiner noted that the prior art did not teach or suggest the combination of the following two limitations recited in then-pending independent claim 21 (issued claim 1, not challenged here):

1) "a plurality of semiconductor diodes with light beams; a multiplexer capable of combining the plurality of semiconductor diode light beams and generating at least a multiplexed light beam comprising one or more wavelengths; one or more waveguide structures configured to receive at least a portion of the one or more wavelengths and to communicate at least the portion of the one or more wavelengths to an output end of the one or more waveguide structures to form an output beam; and a lens system configured to receive at least a portion of the output beam and to communicate at least the portion of the output beam onto a part of a user' s body comprising blood to perform a measurement on a use;" and

2) "a software application capable of generating data based at least in part on the measurement on the user, wherein the data represents at least in part physiological information associated with the user; the software application capable of operating on a control system adapted to receive, store and process at least a portion of the physiological information, the control system having a touch-screen, a proximity sensor, and a wireless transceiver to transmit wireless data over a wireless link, the wireless data comprising at least a part of the physiological information, wherein the control system is further capable of receiving voice input signals and manually entered input signals; and a host comprising: a digital file for receiving and storing at least a portion of the wireless data; control logic at the host to process at least the portion of the wireless data to generate a status of the user; a memory storage device for recording the status; and an output for communicating at least a portion of the status or associated information over a communication link to one or more display output devices, wherein the one or more display output devices are located

remotely from the host."

'868FH, 182-183. Anthony, ¶¶56-57.

Notably, the combination of these two groups of limitations that appeared to overcome the prior art of record was not recited in Challenged Claim 7 (then-pending independent claim 27), which is broader than independent claim 1 explicitly addressed by the Examiner. Rather, claim 7 only recited the second group of limitations, but not the first. Anthony, ¶58.

Thus, it appears that in allowing all claims, the Examiner did not properly examine whether Challenged Claim 7 actually disclosed the purportedly distinguishing feature in independent claim 1. And indeed, for the reasons set forth below, these concepts were already well known as demonstrated by the art cited herein, and Challenged Claim 7 and its challenged dependent claims (8-11, 13-14) should be found unpatentable. §IX. Anthony, ¶59.

VI. §325(D) AND §314(A) DISCRETION DOES NOT APPLY

A. §325(d)

Under the *Advanced Bionics* framework, there is no basis for discretionary denial under §325(d) as **the grounds raised by this Petition are not the same or substantially the same as the art and arguments raised during prosecution of the '868 patent**. *Advanced Bionics, LLC v. MED-EL Elektromedizinische Geräte GmbH*, IPR2019-01469, Pap. 6, *8 (precedential). Anthony, ¶¶76-187.

The references relied upon in the Grounds—**Mault, Mitsui, Pologe,** and **Kiani** —were not cited in an IDS or otherwise identified by the Examiner, or applied to reject claims during '868's prosecution. The Examiner also never considered the testimony of Petitioners' expert Brian Anthony regarding the scope and content of these documents. Anthony, ¶¶73-187.

Even if the art or arguments were substantially the same, the Examiner erred in a manner material to the patentability of the Claims. Because the Examiner "did not expressly consider" nor issue any rejections based on the art relied on in this petition, it is difficult, if not impossible, to explain "why the Examiner allowed the claims" or "how the Examiner might have considered the arguments presented in the Petition." *Bowtech, Inc. v. MCP IP, LLC*, IPR2019-00379, Pap. 14, *20 (declining to exercise §325(d) discretion). To the extent art considered by the Examiner was substantially the same as the references identified in the Grounds, the Examiner erred by not rejecting the Claims for the reasons discussed in §IX. Anthony, ¶¶73-187.

The Board should not deny institution under §325(d).

B. §314(a)

The Texas Case also does not warrant exercising discretion under §314(a).

Factor 1 weighs in favor of institution. Petitioners intend to seek a stay of the Texas Case pending the outcome of this IPR, along with other IPRs related to the

litigation dispute. At the time of institution, it is highly unlikely that the Court will have conducted a *Markman* hearing, which is currently scheduled for February 13, 2026. Ex.1020, 4. The EDTX has routinely granted stays prior to claim construction, since cases have "not reached such an advanced stage that it would weigh against a stay." *Broadphone LLC v. Samsung Elecs. Co.*, No. 2:23- CV-00001-JRG-RSP, 2024 WL 3524022, at *2-3 (E.D. Tex. July 24, 2024).

While ***Factors 2 and 3*** are neutral or at most weigh slightly against institution, they deserve little weight given Petitioners' diligence in preparing and filing this Petition.

Factor 4 weighs strongly in favor of institution. Petitioners hereby stipulate that, if the PTAB institutes this IPR, Petitioners will not pursue in the Texas Case (1) the specific grounds asserted in this IPR or any ground that was raised or could have been raised in an IPR against the Challenged Claims; or (2) combinations of the prior art asserted in this IPR with any other type of prior art against the Challenged Claims.

Factor 5 is neutral or weighs at most only slightly against institution. While Petitioners and Patent Owner (PO) are the same parties in the Texas Case, institution and a public trial record of the important invalidity grounds in the Petition will reduce issues for the public, including all parties besides Petitioners who currently are or may in the future be subject to litigation involving the '868.

Factor 6 weighs strongly in favor of institution. The Petition is strong and

presents compelling unpatentability arguments that were overlooked during prosecution. The primary reference, **Mault**, discloses all aspects of the claimed diagnostic system with a light source that uses light beams to perform measurements on a user and a control system and a host for processing these measurements. The additional limitations were well-known in the art and further described in **Mitsui, Pologe**, and **Kiani**. *See* §IX. Anthony, ¶¶44-46, 76-187. There is a significant public interest against "leaving bad patents enforceable," *Thryv, Inc v. Click-ToCall Techs., LP*, 590 U.S. 45, 55 (2020).

Additionally, the Patent Owner has not developed strong settled expectations with regard to the '868. The '868 issued in 2015 but was never asserted until June 30, 2023—right before it expired on August 29, 2023. *Cheetah Omni, LLC v. Whoop, Inc.*, Docket No. 6-23-cv-00478 (W.D. Tex, 2023). That "a patent may have been in force for years but may not have been…asserted" is considered a "persuasive reason[] why the Board should review challenged claims several years after their issuance date." *Intel, Corp. v. Proxense, LLC*, IPR2025-00327, Pap. 12, *2 (PTAB June 26, 2025).

The '868 also covers substantially similar subject matter and claim language as the challenged patents in the concurrently filed IPRs noted in §II.B above—all concurrently filed IPRs challenge patents related to light-based systems for physiological measurements and claims reciting similar componentry and

functionality used therein. It therefore would be a more efficient use of the Board's resources to address all of these patents that relate to the same technological matter together.

Accordingly, the Board should not exercise its discretion to deny institution. §314(a).

VII. LEVEL OF ORDINARY SKILL IN THE ART

On or before the claimed priority date of 9/3/2002, a person of ordinary skill in the art ("POSITA") would have had a good working knowledge of optical sensing techniques and their applications, and some familiarity with optical system design and signal processing techniques. That knowledge would have been gained via an undergraduate education in engineering (electrical, mechanical, biomedical or optical) or a related field of study, along with relevant experience in studying or developing physiological monitoring devices (e.g., non-invasive optical biosensors) in industry or academia. Additional graduate education could substitute for professional experience, or significant experience in the field could substitute for formal education. Anthony, ¶¶60-63.

VIII. CLAIM CONSTRUCTION

Claim terms subject to IPR are to be construed according to the *Phillips* standard applied in district court. §42.100(b). Only terms necessary to resolve the controversy must be construed. Because the prior art asserted herein discloses

embodiments within the Claims' indisputable scope, the Board need not construe the Claims' outer bounds.[3] Other than noted here, all claim terms should be construed according to their plain and ordinary meaning as they would have been understood by a POSITA. Anthony, ¶64.

A. Means-Plus-Function Terms

The term "voice recognition module" in Claim 11 should be construed according to its plain and ordinary meaning as it would have been understood by a POSITA, but to the extent it is construed as a means-plus-function term, **the function** should be construed as **voice recognition**, and the **corresponding structure** should be construed as **"any hardware, software, firmware, or any combination thereof that is capable of converting a voice command signal [] into a control signal."** '868, 14:39-51, 9:24-30; *see* §IX.A.2.[11]. Anthony, ¶¶65-67.

[3] In the Texas Case, Defendants identified certain terms of the '868 patent as potentially indefinite. Ex.1013, 227-228. Regardless of the outer bounds of these limitations, the prior art discloses the indisputable scope of these limitations. *See* §IX. Anthony, ¶¶68-69, 91 ([7.b]), 98 ([7.c]), 109-110 ([7.e]), 118 ([7.f]), 140-41 ([9]), 168-69 ([8]).

IX. GROUNDS OF UNPATENTABILITY

As explained below, the Claims are unpatentable as obvious. This Petition is supported by the Declaration of Brian Anthony, which describes the prior art's scope and content at the time of the '868. Anthony, ¶¶1-195.

A. Ground 1: Mault (Claims 7, 10-11, 14)

1. Overview of Mault (Ex.1004)

Mault discloses "blood glucose management systems" for "controlling…blood glucose levels," which allow users to "keep blood glucose levels within a predetermined range" using "blood glucose measurements" and calculations based on a "glycemic response model." Mault, Abstract, [0013], [0037], [0073]. For example, as illustrated in exemplary Figure 2 below, the system uses a **"glucose sensor 38"** with "at least one semiconductor laser or light emitting diode to emit wavelengths in the near-IR" that is "placed against part of the body" and detects "wavelengths … transmitted through or reflected by blood-containing tissue" through procedures including "spectroscopic techniques." Mault, [0013], [0020], [0073], Fig. 2 (annotated). Anthony, ¶76.

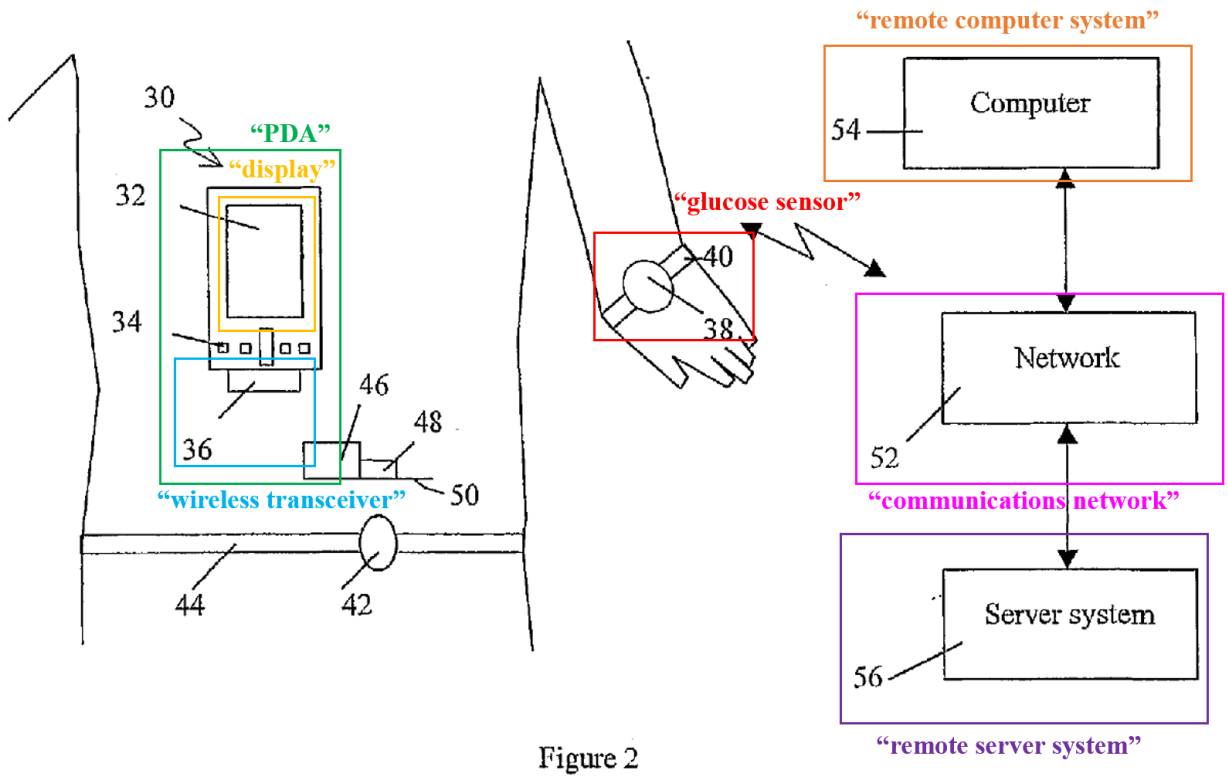

Figure 2

Mault, Fig. 2 (annotated). Anthony, ¶76.

The measurements from the **glucose sensor** are then sent to a "portable electronic device," such as a "headset" or "**personal digital assistant (PDA)**, having a software program" which uses the "glycemic response model" to "calculate the change in blood glucose level for the person over time." Mault, [0014]-[0015], [0020]-[0021], [0070]. For example, the **PDA, such as a "Palm Pilot,"** includes a "**display 32**," "sensors" for "determining location … from GPS," and a **"wireless transceiver 36,"** to transmit data such as the "blood glucose reading[s]." Mault, [0070], [0077], [0079], [0198], [0208], Fig. 2. The PDA is also "used as a diet log … to store blood glucose readings" and further includes "voice recognition software"

and a "restricted voice recognition capability" that allows it to process "voice entr[ies]" from the user to the diet log. Mault, [0106], [0118], [0193]. Anthony, ¶77.

Mault's blood glucose management system further includes a **"remote server system 56"** which receives the blood glucose data from the **PDA** over a wireless **"communications network 52."** [0079], Fig. 2. The **remote server system 56** "store[s] a database" of data such as the "blood glucose reading[s]." [0074], [0079], [0201]. Additionally, "**remote computer system 54**" performs "computer expert system analysis" on the blood glucose readings and generates "feedback" indicating whether the person's current blood glucose level "exceeds the upper recommended blood glucose level" and projecting future levels over time, including whether the glucose level will rise above an upper recommended limit, in which case the user would receive "an alert regarding the glucose level excursion." [0079], [0136], Fig. 15. This feedback is then transmitted to the PDA and "other display device[s] such as an interactive television" for display to the user. [0077], [0079], [0180]. Anthony, ¶78.

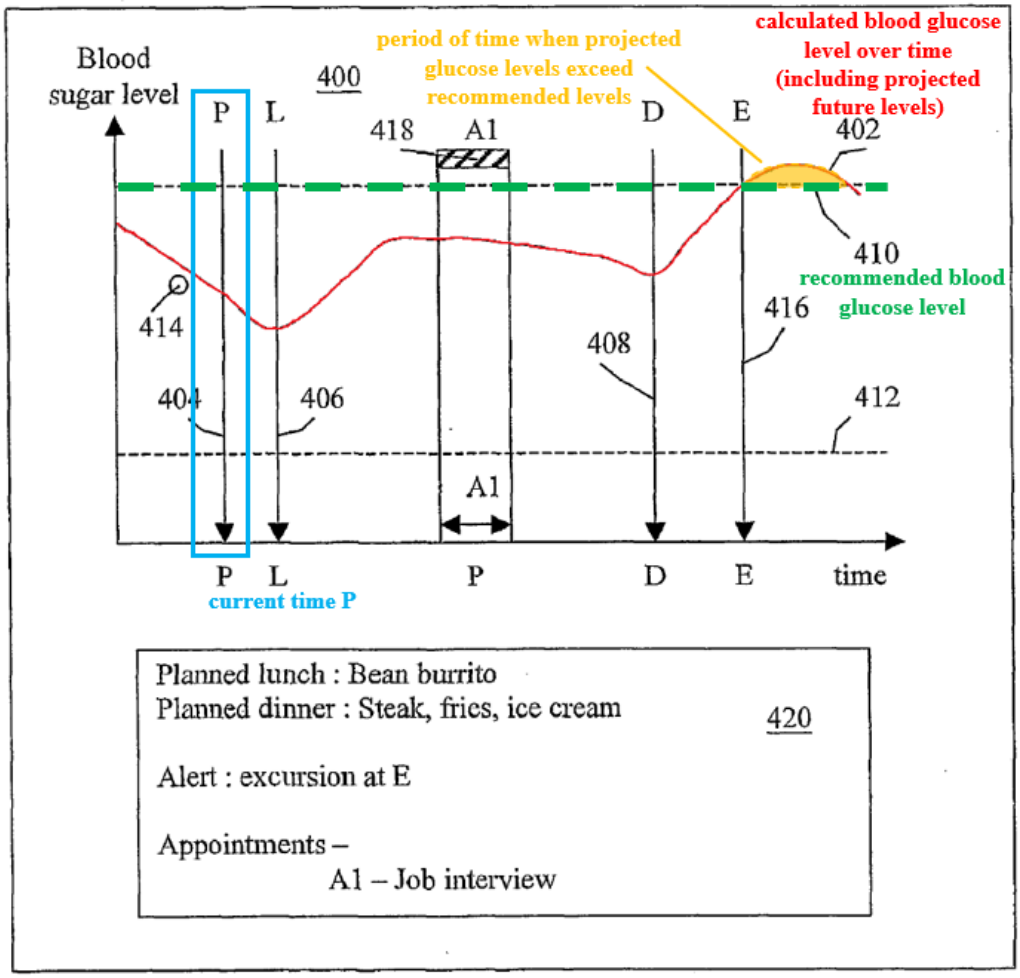

Figure 15

Mault, Fig. 15 (annotated). Anthony, ¶78.

2. Claim Chart

'868 Claim	U.S. Publication No. 2003/0208113A1 ("Mault")
[7.pre] A diagnostic system comprising:	**To the extent that the preamble is limiting, Mault discloses a diagnostic system (***e.g.*, "blood glucose management system[]"). ***E.g.*, Mault** **Mault** discloses "blood glucose management systems," which allow users to "keep blood glucose levels within a predetermined range." [0013]. Anthony, ¶¶80-82.

’868 Claim	U.S. Publication No. 2003/0208113A1 (“Mault”)
	• **Abstract:** “A ***system for assisting a person to maintain a blood glucose level between predetermined limits*** comprises….” • **[0013]:** “Embodiments of the present invention provide methods of ***blood glucose management systems*** that allow a person to view projected future levels of blood glucose, so as to assist the person to ***keep blood glucose levels within a predetermined range, such as a medically advisable healthy range***.” • ***See also*** **[0037], [0068], [0073], [0105].**
[7.a] a light source comprising: one or more semiconductor diodes generating an input light beam; and	**Mault discloses a light source comprising one or more semiconductor diodes** (*e.g.*, “blood glucose sensor” that “us[es] at least one semiconductor laser or light emitting diode”) **generating an input light beam** (*e.g.*, “emit wavelengths”). ***E.g.*, Mault** **Mault’s** blood glucose management system includes a “blood glucose sensor” that “us[es] at least one semiconductor laser or light emitting diode to emit wavelengths in the near-IR,” which are “transmitted through…blood-containing tissue.” [0013], [0020]. Anthony, ¶¶83-85. • **[0013]: “**Embodiments of the present invention provide methods of ***blood glucose management systems*** that allow a person to view projected future levels of blood glucose, so as to assist the person to ***keep blood glucose levels within a predetermined range, such as a medically advisable healthy range***.” • **[0020]:** “The person carries a portable computing device, such as a PDA, which receives blood glucose levels from a blood glucose sensor. The ***blood glucose sensor*** may be a device clipped on to the earlobe of the person, using ***at least one semiconductor laser or light emitting diode*** to ***emit wavelengths*** in the near-IR. These wavelengths are ***transmitted through or reflected by blood-containing tissue, and then detected by a near-IR detector***.”

’868 Claim	U.S. Publication No. 2003/0208113A1 (“Mault”)
	• ***See also*** **[0087], [0105]**
[7.b] a lens system configured to receive at least a portion of the input light beam and to communicate at least the portion of the input light beam onto a part of a user’s body comprising blood, wherein at least the portion of the input light beam is used in a measurement on a user;	**Mault discloses the light source** (“blood glucose sensor,” *see* [7.a]) **comprising a lens system** (e.g., “at least one light emitting diode” in the “blood glucose sensor” is covered by an encapsulating lens) **configured to receive at least a portion of the input light beam** (*e.g.*, encapsulating lens(es) of the “at least one light emitting diode” receive(s) the wavelengths of light emitted from the diode, *see* [7.a]) **and to communicate at least the portion of the input light beam onto a part of a user's body comprising blood** (*e.g.*, “emit wavelengths” through “blood-containing tissue”)[4]**, wherein at least the portion of the input light beam is used in a measurement on a user** (*e.g.*, “wavelengths … transmitted through or reflected by blood-containing tissue” are “used to compute the blood glucose level of the person” using the “blood glucose sensor” that is “wrist-mounted” or clipped to the person’s “earlobe”). ***E.g.*, Mault** *See* [7.a]. The “at least one light emitting diode” (LED) in **Mault**’s blood glucose sensor is part of a lens system. In particular, a POSITA would have understood, and at minimum found obvious, that the light emitting diode(s) are covered by lensing encapsulants to help

[4] Regardless of the outer bounds of the term “a part of a user’s body comprising blood,” the scope of this term must at least include **Mault’s** disclosures as they correspond the ’868’s embodiment(s) covered by this term. *See, e.g.*, ’868, 3:17-21; Mault, [0020]. Anthony, ¶91.

’868 Claim	U.S. Publication No. 2003/0208113A1 (“Mault”)
	direct light emitted by the LED(s) to the tissue. [0020].[5] Anthony, ¶¶86-89. A POSITA would have understood that the lensing encapsulants would then “emit [the] wavelengths in the near-IR,” which “are transmitted through or reflected by blood-containing tissue” of a person’s body.” *Id.* The body’s absorption levels of the wavelengths (e.g., “absorption ratio” comparing absorption of one wavelength to another) are then “used to compute the blood glucose level of the person” “to obtain a blood glucose reading” where the blood glucose sensor is “wrist-mounted,” “mounted on a belt,” or clipped to the person’s “earlobe.” [0020], [0073], [0079], [0105]; Figs. 2, 9. Anthony, ¶90. • **Fig. 2:** 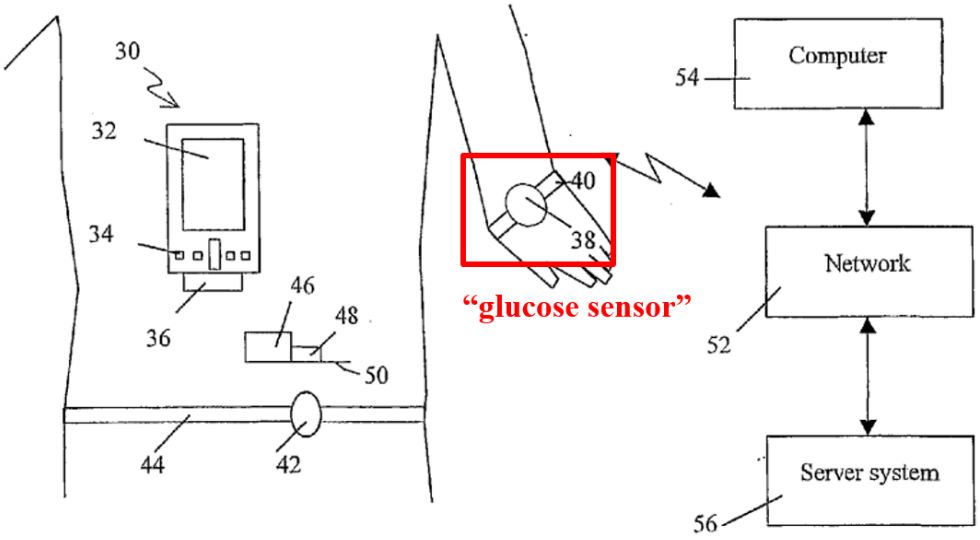 Figure 2 • **Fig. 9:**

[5] *See, e.g.*, Ex.1035 (Pugh), 3:1-14; Ex.1036 (Eliasehevich), 4:28-31; Ex.1037 (Inditsky), 4:61-65. *See also* ’533-FWD, 36 (citing ’533-Pet. 39-40); ’484-FWD, 23 (citing ’484-Pet. 29-30). Anthony, ¶¶89.

'868 Claim	U.S. Publication No. 2003/0208113A1 ("Mault")
	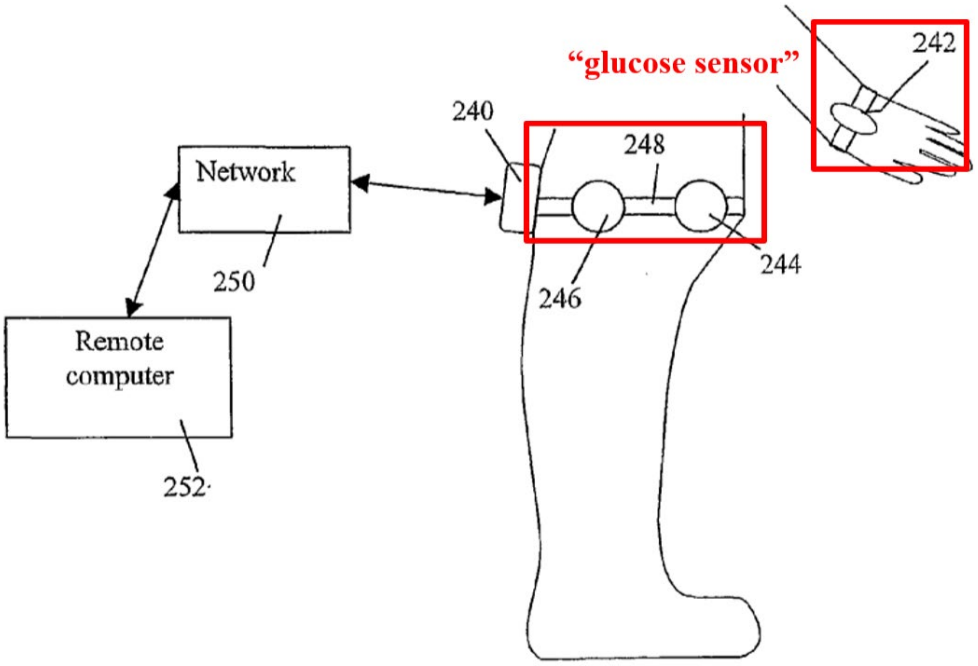 Figure 9 • **[0020]:** "The person carries a portable computing device, such as a PDA, which receives blood glucose levels from a blood glucose sensor. The ***blood glucose sensor may be a device clipped on to the earlobe of the person, using at least one semiconductor laser or light emitting diode*** to ***emit wavelengths in the near-IR***. These ***wavelengths are transmitted through or reflected*** by ***blood-containing tissue***.… For example, two wavelengths may be chosen, one absorbed and one not absorbed by blood glucose, ***the absorption ratio then being used to compute the blood glucose level of the person.***" • **[0073]:** "… Sensor 12 may also use in-vivo spectroscopy techniques to measure blood glucose …. For example, ***IR absorption or reflection*** properties of skin or tissues …. For example, using a ***non-invasive spectroscopic technique***, the PDA/module combination may be ***placed against part of the body to obtain a blood glucose reading***." • **[0079]:** "***FIG. 2 shows a system embodiment,*** comprising portable computing device 30 having a display 32, data entry

’868 Claim	U.S. Publication No. 2003/0208113A1 (“Mault”)
	mechanism 34, and wireless transceiver 36; ***a wrist-mounted glucose sensor 38 having a strap 40***….” • **[0105]:** “FIG. 9 shows a glycemic control system integrated with a fetal monitoring system for pregnant women. ... The electronic device 240 receives data from a ***blood glucose sensor 242 which is illustrated as a wrist mounted device but can be any convenient location, such as mounted on belt 248. The belt 248 can be placed around the waist of the woman***.” …***Other physiologic sensors can be added to the system***.” • ***See also*** **[0085], [0089], [0094], [0122]**
[7.c] a software application capable of generating data based at least in part on the measurement on the user, wherein the data represents at least in part physiological information	**Mault discloses a software application** (*e.g.*, “software program” of PDA) **capable of generating data** (*e.g.* “predict[s] future blood glucose levels”) **based at least in part on the measurement on the user** (*e.g.*, “two wavelengths … one absorbed and one not absorbed” sensed by the “blood glucose sensor” that is “wrist-mounted,” “mounted on a belt,” or clipped to the person’s “earlobe”) **wherein the data represents at least in part physiological information associated with the user** (*e.g.*, person’s blood glucose levels)[6]. ***E.g.*, Mault** **Mault’s** blood glucose management system further includes a “personal digital assistant (PDA), having a software program,” which “uses a glycemic response model” to generate data that “predict[s] future blood glucose levels” of a person based on the

[6] Regardless of the outer bounds of the term “physiological information associated with the user,” the scope of this term must at least include **Mault’s** disclosures as they correspond the ’868’s embodiment(s) covered by this term. *See, e.g.*, ’868, 7:66-8:2, 8:3-15; Mault, [0014]-[0015], [0020]-[0021], [0079]. Anthony, ¶98.

’868 Claim	U.S. Publication No. 2003/0208113A1 (“Mault”)
associated with the user;	person’s measured glucose levels and further input regarding the person’s dietary habits. [0014]-[0015], [0021]. Anthony, ¶¶92-94. The person’s blood glucose level is measured using a “blood glucose sensor” worn on the user (e.g., “clipped on to the earlobe of the person,” “wrist-mounted”) by determining an “absorption ratio” of “two wavelengths” of light, “one absorbed and one not absorbed by blood glucose.” [0014], [0020], [0079], [0105]; Figs. 2, 9. Anthony, ¶95. The predicted blood glucose levels generated by the software program represent how the person’s “[b]lood glucose levels” will change over time in the future based on various dietary input data from the person (e.g., consumed meals). Mault, [0014]-[0015], [0020]-[0021]. For example, Mault discloses receiving input data regarding the person’s food consumption using “voice recognition software.” [0109], [0100], [0118]. Anthony, ¶¶96-97. • **Fig. 2:** 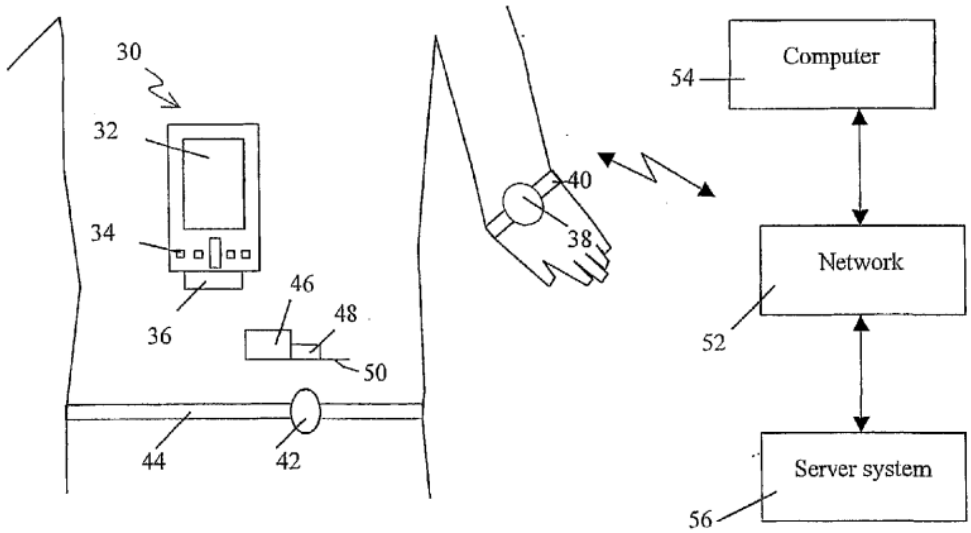 Figure 2 • **Fig. 9:**

’868 Claim	U.S. Publication No. 2003/0208113A1 (“Mault”)
	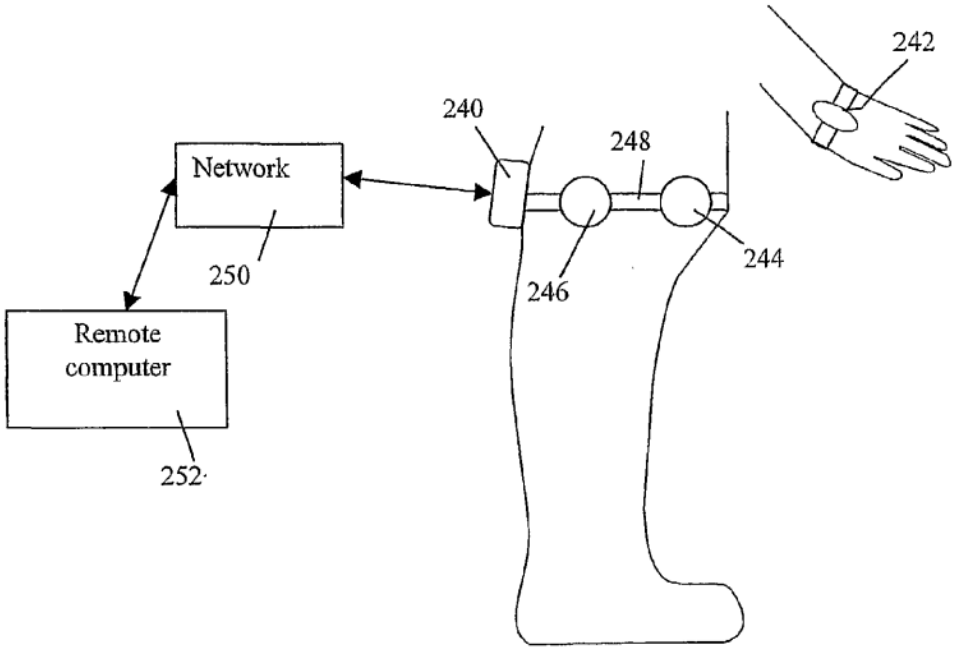 Figure 9 • **[0014]:** “In one embodiment, the system comprises a portable computing device such as a personal digital assistant (PDA), having a ***software program*** (such as a calorie management program or other health maintenance program) having a ***glycemic modeling capability, such as a glycemic response algorithm***…. The software program can be adapted to ***receive blood glucose measurements of the person***. ...The software program can be advantageously modified…to access a component response database by which the ***blood glucose response of a person to a meal can be determined by identifying meal components and determining the glycemic response of the person to the components***. Diet logging methods are described in more detail later.” • **[0015]:** “… The ***software program receives food data, and uses*** a ***glycemic response model to calculate the change in blood glucose level for the person over time, projecting future values*** and presenting the future values to the person on a display.…***The projected blood glucose levels, as***

'868 Claim	U.S. Publication No. 2003/0208113A1 ("Mault")
	determined by the software program, can be compared with ***measurements of blood glucose*** performed by the person at intervals…." • **[0020]:** "The person carries a portable computing device, such as a PDA, ***which receives blood glucose levels from a blood glucose sensor***. ***The blood glucose sensor may be a device clipped on to the earlobe of the person, using at least one semiconductor laser or light emitting diode to emit wavelengths in the near-IR***. These wavelengths are transmitted through or reflected by blood-containing tissue, and then detected by a near-IR detector. ...***For example, two wavelengths may be chosen, one absorbed and one not absorbed by blood glucose, the absorption ratio then being used to compute the blood glucose level of the person***…." • **[0021]:** "The person enters meals consumed (in terms of food content and time of meal), and planned meals, into the PDA using the diet log functionality of a software program running on the PDA. ***The software program further uses a glycemic response model for the person to predict future blood glucose levels, based on the planned meals and possible insulin injections***." • **[0079]:** "***FIG. 2 shows a system embodiment,*** comprising portable computing device 30 having a display 32, data entry mechanism 34, and wireless transceiver 36; ***a wrist-mounted glucose sensor 38 having a strap 40***…." • **[0105]:** "FIG. 9 shows a glycemic control system integrated with a fetal monitoring system for pregnant women. …The electronic device 240 receives data from a ***blood glucose sensor 242 which is illustrated as a wrist mounted device but can be any convenient location, such as mounted on belt 248. The belt 248 can be placed around the waist of the woman***." … ***Other physiologic sensors can be added to the system***." • ***See also*** **[0028], [0037], [0038], [0042], [0134], [0151]**

’868 Claim	U.S. Publication No. 2003/0208113A1 (“Mault”)
[7.d] the software application capable of operating on a control system adapted to receive, store and process at least a portion of the physiological information,	**Mault discloses the software application** (*e.g.*, “software program,” *see* [7.c]) **capable of operating on a control system** (*e.g.*, “PDA”) **adapted to receive** (*e.g.*, “adapted to receive blood glucose measurements”)**, store** (*e.g.*, “store blood glucose readings”) **and process at least a portion of the physiological information** (*e.g.*, “glycemic response of the person” is “calculated from the blood glucose readings” using a “glycemic response algorithm”). ***E.g.*, Mault** *See* [7.c]. **Mault** further discloses the “electronic device 240,” such as a “PDA,” has “a software program” that is “adapted to receive blood glucose measurements of the person.” [0014], [0042], [0105], Fig. 9. The PDA “store[s]” the “blood glucose readings” to keep a “diet log” for the person, and uses a “glycemic response algorithm” to “calculate” the person’s “glycemic response…from the blood glucose readings.” [0014], [0042], [0069], [0106], [0129]. Anthony, ¶¶99-101. • **Fig. 9:**

’868 Claim	U.S. Publication No. 2003/0208113A1 (“Mault”)
	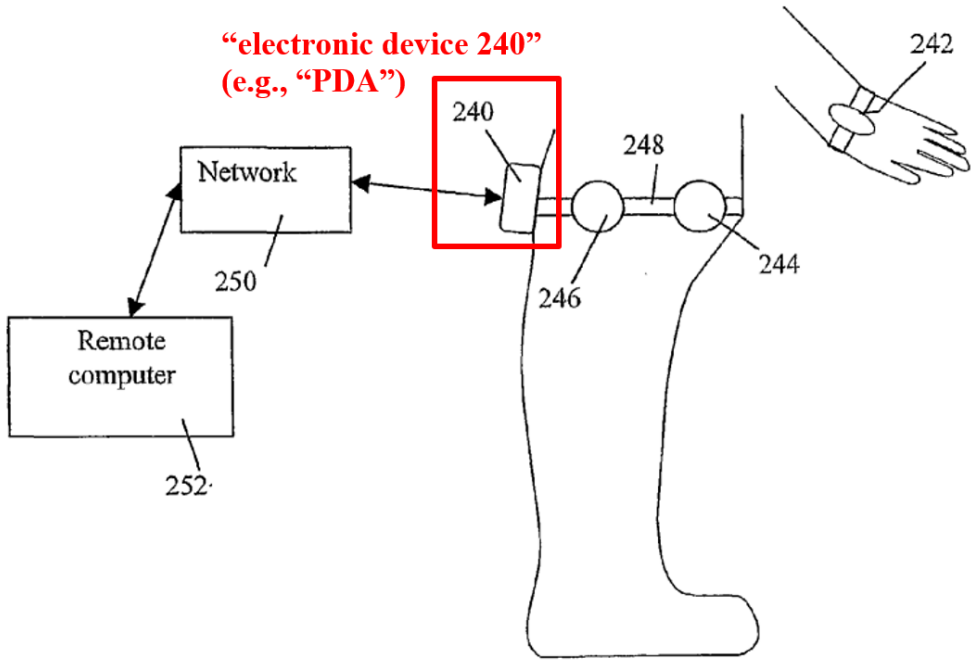 Figure 9 • **[0014]:** “In one embodiment, the system comprises a ***portable computing device such as a personal digital assistant (PDA), having a software program***...having a glycemic modeling capability, such as a ***glycemic response algorithm***…. The ***software program can be adapted to receive blood glucose measurements of the person***. ***Blood glucose levels can be determined*** by any convenient technique for comparison with the glycemic response predictions of the software program.” • **[0042]:** “A system for assisting a person to maintain a blood glucose level between predetermined limits comprises an ***electronic device, for example a portable computing device such as a PDA***….” • **[0074]:** “In one embodiment, the ***glucose sensor transmits the blood glucose level data to the PDA*** using a wireless communication protocol such as Bluetooth (Ericsson Components AB).”

’868 Claim	U.S. Publication No. 2003/0208113A1 (“Mault”)
	• **[0105]: “…** ***Electronic device 240*** is shown mounted on a belt 248 but can be ***any portable electronic device*** such as a ***PDA***….” • **[0106]:** “The ***electronic device 240 is used as a diet log*** and to ***store blood glucose readings***….” • **[0129]:** “The ***PDA may also be used to keep a diet log*** for the person ***over an extended period of time***, for example one month, during which ***blood glucose readings*** are made at appropriate intervals, for example every half-hour, perhaps more frequently just after a meal. The ***glycemic response of the person can then be calculated from the blood glucose readings*** ….” • ***See also*** **[0069], [0070], [0079], Figs. 1-2**
[7.e] the control system having a touch-screen, circuitry for obtaining position information from a location sensor, and a wireless transceiver to transmit	**Mault discloses the control system** (*e.g.*, “PDA,” *see* [7.d]) **having a touch-screen** (*e.g.*, “display 32” of the PDA, such as a “Palm Pilot”)**, circuitry for obtaining position information from a location sensor** (*e.g.*, “global positioning system (GPS)” on PDA includes circuitry to obtain location information from sensors used for “determining location”)**, and a wireless transceiver to transmit wireless data over a wireless link** (*e.g.*, “wireless transceiver[s]” that “transmit[s] physiologic data”)[7]**, the wireless data comprising at least a part of the physiological information** (*e.g.*, “physiologic data” includes ”blood glucose reading[s]”, *see* [7.c])**, wherein the control system is further capable of**

[7] Regardless of the outer bounds of the term “wireless data,” the scope of this term must at least include **Mault’s** disclosures as they correspond the ’868’s embodiment(s) covered by this term. *See, e.g.*, ’868, 8:35-9:3; Mault, [0201]. Anthony, ¶109.

’868 Claim	U.S. Publication No. 2003/0208113A1 (“Mault”)
wireless data over a wireless link, the wireless data comprising at least a part of the physiological information, wherein the control system is further capable of receiving voice input signals and manually entered input signals; and	**receiving voice input signals and manually entered input signals** (*e.g.*, PDA receives “voice entry, manual entry”)[8]. **<u>*E.g.*, Mault</u>** *See* [7.d]. **Mault** further discloses the PDA has a “display 32.” Mault, [0079], Fig. 9. For example, Mault discloses that the PDA can be a “Palm Pilot,” which has a touch-screen.[9] [0070], [0079]; Fig. 2. At minimum, a POSITA would have found it obvious that the PDA uses the well-known concept of a touchscreen as its data entry mechanism.[10] Anthony, ¶¶102-105. **Mault’s** PDA further includes “sensors” for “determining location (from GPS or other positioning method)” of the person, as well as “positional and/or altitude data.” [0208], [0198]. To “facilitate medical rescue in an emergency,” the “global positioning system (GPS)…added to the PDA” includes circuitry to obtain location information from the PDA’s “sensors” for “determining location,” or at minimum it would have been obvious to do so. [0077], [0208]. Anthony, ¶106. Mault’s PDA further includes “wireless transceiver 36,” which wirelessly “transmit[s] physiologic data,” such as the “blood

[8] Regardless of the outer bounds of the term “voice input signals and manually entered input signals,” the scope of this term must at least include **Mault’s** disclosures as they correspond the ’868’s embodiment(s) covered by this term. *See, e.g.*, ’868, 8:3-10 ; Mault, [0199]. Anthony, ¶¶109-110.

[9] *See, e.g.*, Ex.1018 (Allport), 3:60-65; Ex.1025 (Hirshberg), 9:3-5. Anthony, ¶104.

[10] *See, e.g.*, Ex.1019 (Causey), 18:24-28; Ex.1021 (Currans), 2:46-49. Anthony, ¶105.

'868 Claim	U.S. Publication No. 2003/0208113A1 ("Mault")
	glucose reading[s]" (*see* [7.c], [7.d]) "using…a wireless internet connection" "to a physician, nutritionist, dietician, fitness consultant" for assessment. [0074], [0077], [0079], [0105], [0201]; Fig. 2. Anthony, ¶107. Mault's PDA also receives input though "voice entry [and] manual entry." [0199]. Anthony, ¶108. • **Fig. 2:** 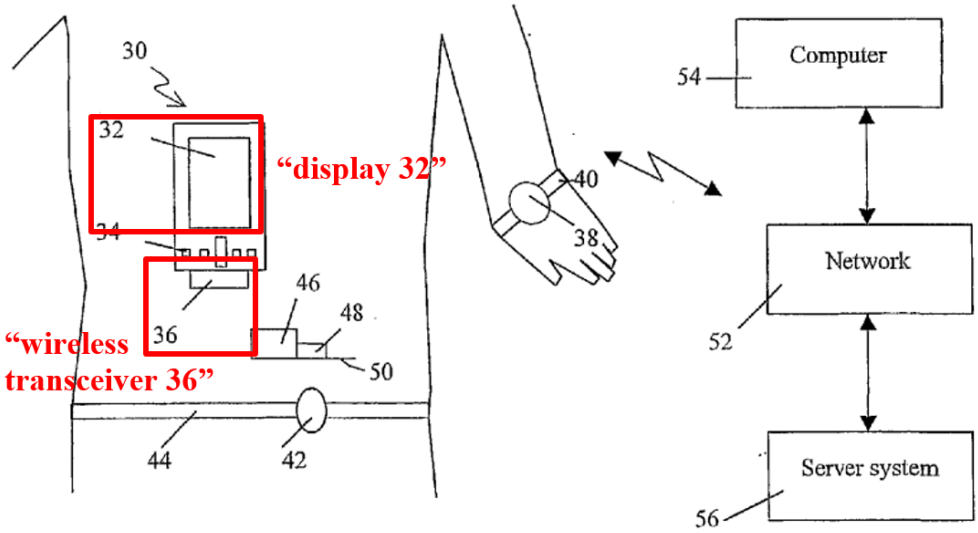 Figure 2 • **[0070]:** "The ***electronic device 10 can be a PDA such as a Palm Pilot***. The electronic device can be a portable electronic device or system carried by the person, or ***a device or system combining multiple functionalities***, such as: ***a personal digital assistant (PDA)***…." • **[0074]:** "In one embodiment, the ***glucose sensor transmits the blood glucose level data to the PDA using a wireless communication protocol such as Bluetooth (Ericsson Components AB)***. Communication methods between sensor 12 and PDA 10 might include ***Bluetooth, IR transmission, IEEE 802.11(b), wireless Ethernet, optical methods, acoustic methods, or other wireless methods***, or using a cable connection, electrical interface, or manual entry of data

’868 Claim	U.S. Publication No. 2003/0208113A1 (“Mault”)
	into the PDA using any input mechanism, such as keys, a stylus, voice recognition, and the like. ***The PDA may request a blood glucose reading from the sensor***.” • **[0077]:** “…The PDA can ***access the communications network, such as the Internet, using a wireless connection***. ***Data can be transferred to the remote system over the communications network 20….*** Feedback, generated by a specialist or computer expert system, may be ***transmitted to the PDA from the remote computer over the communications network***. In an emergency situation, the PDA may send out a request for medical assistance. ***A global positioning system (GPS) may also be added to the PDA***, to facilitate medical rescue in an emergency.” • **[0079]:** “FIG. 2 shows a system embodiment, comprising ***portable computing device 30 having a display 32, data entry mechanism 34***, and ***wireless transceiver 36….***” • **[0105]:** “FIG. 9 shows a glycemic control system integrated with a fetal monitoring system for pregnant women. Electronic device 240 is shown mounted on a belt 248 but can be any portable electronic device such as a PDA. The ***electronic device 240 receives data from a blood glucose sensor 242*** ….” • **[0198]:** “…The PDA can be used for monitoring the physical activity of the person. The PDA is used to receive and store activity-related data, for example the ***PDA may be used for:…receiving positional and/or altitude data, using a global positioning system (GPS), triangulation method, or other positioning scheme, to obtain data such as speed, distance traveled, distance climbed***….” • **[0199]:** “Data may be received by the ***PDA*** using any convenient method, for example … ***voice entry, manual entry*** (for example using keys or stylus), etc….” • **[0201]:** “A ***PDA*** can also be used to monitor the ***physiological state of the person***. It may ***communicate or***

’868 Claim	U.S. Publication No. 2003/0208113A1 (“Mault”)
	otherwise receive data from physiological sensors or monitors carried by the person…. The following methods or devices may be used: … ***transmitting physiologic data*** to a physician, nutritionist, dietician, fitness consultant, or other professional, ***using for example a wireless internet connection***, for example ***transmitting data*** at periodic intervals or on demand ***from the PDA to a database on a remote (i.e. not carried by the person) computer***….” • **[0208]:** “***Appropriate sensors may be part of the PDA***, carried with the person by some other method, or otherwise be ***appropriately located for transmission of useful information to the PDA***. The following methods may be useful either individually or in combination: … ***determining location (from GPS or other positioning method)*** … ***manual entry of data*** from diverse sources….” • ***See also*** **[0037], [0042], [0078], [0106], [0109], [0148], Figs. 9-10**
[7.f] a host comprising: a digital file for receiving and storing at least a portion of the wireless data; control logic at the host to process at least the portion of the wireless data to generate a status of the user; a memory storage device for recording the	**Mault discloses a host** (*e.g.*, “remote server system 56”) **comprising: a digital file for receiving** (*e.g.*, “a database” on “remote server system 56” for receiving data “through the communications network 52”) **and storing at least a portion of the wireless data** (*e.g.*, “stor[ing] … physiological parameters, activity, and diet,” including “physiologic data,” such as the “blood glucose reading[s],” *see* [7.e])**; control logic at the host to process at least the portion of the wireless data** (*e.g.*, “computer expert system” to perform “computer expert system analysis” on “physiologic data,” such as the “blood glucose reading[s],” *see* [7.e]) **to generate a status of the user** (*e.g.*, “feedback generated by a … computer expert system,” which indicates whether the person’s blood glucose measurement “exceeds the upper recommended blood glucose level”)**; a memory storage device for recording the status** (*e.g.*, a memory on remote computer system that stores the feedback)**; and an output for communicating at least a portion of the status or associated information over a communication link to one or more display**

’868 Claim	U.S. Publication No. 2003/0208113A1 (“Mault”)
status; and an output for communicating at least a portion of the status or associated information over a communication link to one or more display output devices, wherein the one or more display output devices are located remotely from the host.	**output devices** (*e.g.*, network interface of remote computer server for “transmitt[ing] to the PDA” “or other display device such as an interactive television” “[f]eedback… over the communications network 52”)[11]**, wherein the one or more display output devices are located remotely from the host** (*e.g.*, PDA with “display 32” or “other display device” separate from the remote server system). ***E.g.*, Mault** **Mault** discloses a “remote server system 56,” such as a “remote server,” which receives “data …transferred” from the user’s PDA over a wireless “communications network 52.” [0079], Fig. 2. The remote server “store[s] a database of physiological parameters,” which includes “physiologic data” such as the “blood glucose reading[s]” (*see* [7.e]) that was “transmitt[ed]” by the PDA to the remote server. [0074], [0079], [0105], [0201]. For example, the PDA uses “a wireless internet connection,” to “transmit[] physiologic data” “from the PDA to a database on a remote … computer.” [0201]. Anthony, ¶¶111-13. A POSITA would have known, or at minimum found obvious, that the remote server’s database is a digital file that stores the “physiologic data,” including the “blood glucose reading[s].”[12] Anthony, ¶114. A “computer expert system” of the remote computer system performs “computer expert system analysis” to process the stored

[11] Regardless of the outer bounds of the term “at least a portion of the status or associated information,” the scope of this term must at least include **Mault’s** disclosures as they correspond the ’868’s embodiment(s) covered by this term. *See, e.g.*, ’868, 8:24-31; Mault, [0136], Fig. 15. Anthony, ¶118.

[12] *See, e.g.*, Ex.1031 (Huei), 1:37-43; Ex.1032 (Komatsu), 5:60-64. Anthony, ¶114.

’868 Claim	U.S. Publication No. 2003/0208113A1 (“Mault”)
	“physiologic data,” such as the “blood glucose reading[s]” to generate “feedback” indicating whether the person’s measured blood glucose level “exceeds the upper recommended blood glucose level.” [0074], [0077], [0136], [0201], Fig. 15. As such, the person’s status—whether his/her blood glucose level is too high—is generated by the “remote computer system” as part of the feedback and then “displayed to the person…on the PDA.” [0180]. For example, as shown in Fig. 15, the feedback is illustrated using a chart that shows the status of the person’s blood glucose levels over time by visually depicting whether the blood glucose level (depicted by curve 402) rises above the upper recommended limit (dotted line 410). Fig. 15, [0136]. Anthony, ¶115. A POSITA would have understood, or at minimum found it obvious, that in order to display the status of the person’s calculated blood glucose level, the status information would have been recorded in a memory storage device. Indeed, as **Mault** explains, the remote computer system performs accuracy checks on its computed glucose models in order to display the person’s glucose status, such that the computed glucose models would be stored in the internal memory of the remote computer system. [0136]. Anthony, ¶116. **Mault** discloses that the “feedback” generated by the “computer expert system” of the remote computer system is “transmitted to the PDA” “or other display device such as an interactive television” “from the remote computer over the communications network” “such as the Internet.” [0077], [0078], [0079], [0180]. Thus, a POSITA would have understood, or at minimum found it obvious, that the remote computer system has a network interface to connect to the “communication network” to transmit the blood glucose level “feedback” to “display device[s]” such as the “display 32” of the person’s PDA or an “interactive television,” which is remote from the remote server. [0079], [0180], [0201]. Anthony, ¶117. • **Fig. 1:**

’868 Claim	U.S. Publication No. 2003/0208113A1 (“Mault”)
	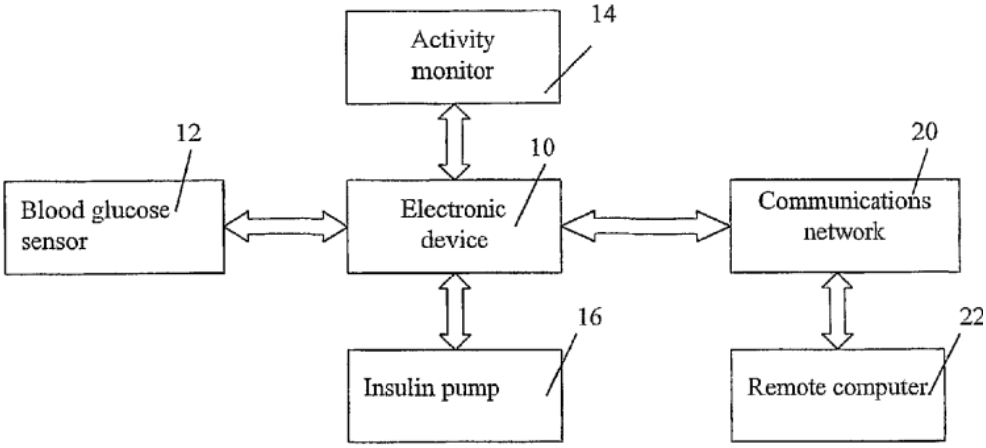 Figure 1 • **Fig. 2:** 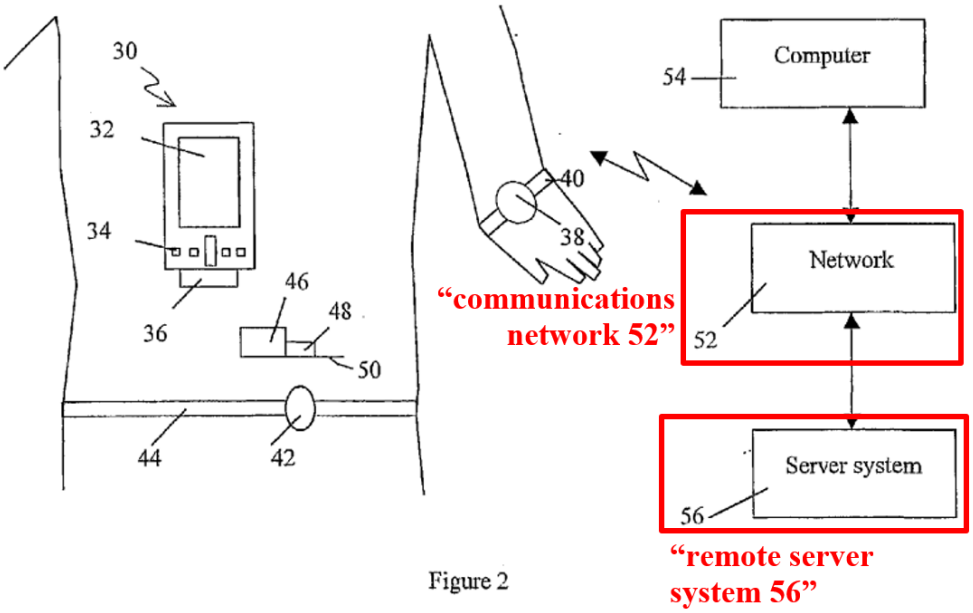 Figure 2 • **Fig. 15:**

'868 Claim	U.S. Publication No. 2003/0208113A1 ("Mault")
	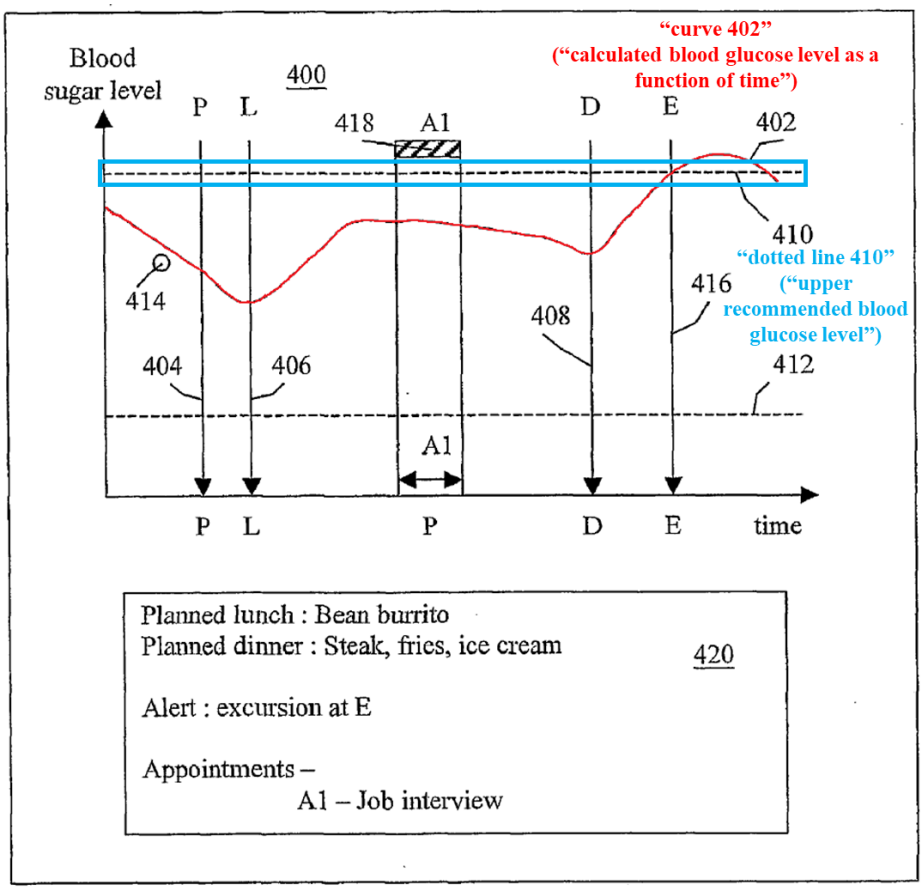 Figure 15 • **[0074]:** "In one embodiment, the ***glucose sensor transmits the blood glucose level data to the PDA*** using a wireless communication protocol such as Bluetooth (Ericsson Components AB).… ***The PDA may request a blood glucose reading from the sensor***." • **[0077]:** "***Remote computer system 22*** may be a ***remote server***, physicians computer, home computer, or other computer system ***accessible over the communications network 20***. The ***PDA can access the communications network, such as the Internet, using a wireless connection***. ***Data can be transferred to the remote system over the communications network 20,…*** ***Feedback, generated by a specialist or computer expert system***, may be ***transmitted to***

’868 Claim	U.S. Publication No. 2003/0208113A1 (“Mault”)
	the PDA from the remote computer over the communications network….” • **[0079]:** “***FIG. 2 shows a system embodiment***… The portable computing device 30 is in linked to a communications network 52, allowing communication a remote computer system 54, which may be located at the person's home, doctor's office, or other remote location. A ***remote server system 56*** is also accessible through the ***communications network 52***, and can ***be used to store a database of physiological parameters, activity, and diet*** relating to the person, for ***medical, nutritional, or computer expert system analysis***.” • **[0136]:** “***FIG. 15 shows a possible presentation on a screen or display of a computing device used to provide feedback to the person***. Within the top half of the screen, a graph or chart 400 shows a curve 402, which ***represents the calculated blood glucose level for the person as a function of time***. The ***current present time[] P is indicated by arrow 404***…. ***As a result of the entered meals, the curve exceeds the upper recommended blood glucose level, shown by dotted line 410***, after the planned dinner at a time E, shown by arrow 416. The ***previous accuracy of the model's predictions has been checked using a data point (414)*** which represents an actual blood glucose measurement for the person…. If ***discrepancies are present, the curve can be shifted, the predictive algorithm modified, or the person recommended to perform more frequent blood glucose measurements***.” • **[0180]:** “The ***PDA may also be in communication with a remote computer system***, for example the Internet. Advice from a ***computer expert system***, physician, ***web site***, etc. ***may be displayed to the person as text, graphics, video, etc., on the PDA*** or ***other display device such as an interactive television***.”

’868 Claim	U.S. Publication No. 2003/0208113A1 (“Mault”)
	• **[0201]:** “A ***PDA*** can also be used to monitor the ***physiological state of the person***.… The following methods or devices may be used: … ***transmitting physiologic data*** to a physician, nutritionist, dietician, fitness consultant, or other professional, ***using for example a wireless Internet connection***, for example transmitting data at periodic intervals or on demand ***from the PDA to a database on a remote (i.e. not carried by the person) computer***….” • ***See also*** **[0069], [0112], [0134], [0190], Fig. 14**
[10] The diagnostic system of claim 7, wherein the control system is further coupled to a headset or a heads-up display.	***See*** **[7].** **Mault discloses that the control system** (*e.g.*, “PDA, *see* [7.d]) **is further coupled to a headset or a heads-up display (***e.g.*, “a headset”). ***<u>E.g.</u>*****<u>, Mault</u>** *See* [7.d]. **Mault** further discloses “combining” the functionality of a “PDA” with the functionality of a “headset” that provides “visual and audio communication to the person.” [0070]. Thus, **Mault** discloses, or at minimum renders obvious, that its PDA is coupled to a headset. Anthony, ¶¶119-21. • **[0070]:** “The electronic device can be a portable electronic device or system carried by the person, or ***a device or system combining multiple functionalities***, such as: ***a personal digital assistant (PDA)***… ***a headset, providing for example visual and audio communication to the person*** ….”
[11] The diagnostic system of claim 7, wherein the control logic includes voice recognition	***See*** **[7].** **Mault discloses that the control logic includes voice recognition software (***e.g.*, “voice recognition software”) **to process at least a portion of the voice input signals (***e.g.*, process “voice entry…of food consumed”)**, and wherein the control system further**

’868 Claim	U.S. Publication No. 2003/0208113A1 (“Mault”)
software to process at least a portion of the voice input signals, and wherein the control system further comprises a voice recognition module.	**comprises a voice recognition module (***e.g.*, “voice recognition capability”).[13] ***E.g.*, Mault** **Mault** discloses that the PDA has a “voice recognition software” to support “voice entry” of food consumed as a method of manual data entry. [0070], [0118], [0133], [0190]. The PDA also has a “restricted voice recognition capability” that processes a user’s “voice entry” to determine what food the user has consumed. [0193]. Anthony, ¶¶122-24. • **[0118]:** “In use, ***the person records food consumed using a software program running on a PDA*** …. ***Data entry can be made using any convenient method, such as*** … ***making voice records, voice recognition software***, using a roller jog entry (as used on Sony devices), or using any convenient method.” • **[0133]:** “… ***Data entry methods can include keystroke entry, voice entry (using voice recognition software)***….” • **[0190]**: “As part of a physiological monitoring system, a ***portable computing device*** can be used to monitor a number of factors influencing the physiological state of the person…. ***Electrical, electromagnetic, and manual data entry may also be used, along with the transfer of non-volatile memory media, voice recognition software, etc.*** The person may enter data manually into the PDA. Optical character recognition may be used for entry of numbers and text into

[13] To the extent “voice recognition module” is construed as a means-plus-function term (as discussed above in Section VIII.A), this term is still disclosed and/or rendered obvious, literally and/or under the doctrine of equivalents, by **Mault’s** “voice recognition software” for the reasons discussed above. Anthony, ¶¶125-27.

’868 Claim	U.S. Publication No. 2003/0208113A1 (“Mault”)
	the PDA. Certain sensors may be incorporated directly into the PDA.” • **[0193]:** “***Food consumed can be entered into the PDA*** using a menu entry system, for example using key presses, stylus entry, ***voice entry***, eye motion detection, hand motion (gesticulation) detection, etc.—for ***voice entry, a restricted voice recognition capability***… The name, code, number, other identifier, time of consumption, nutritional data, portion size, ***or other information concerning food consumed can be entered into the PDA, for example using…voice entry…recording voice records of food consumed***.” • ***See also*** **[0074], [0100], [0121], [0193], [0199], Fig. 13**
[14] The diagnostic system of claim 7, wherein the control system is further coupled to an audio output device capable of communicating at least a part of the processed portion of the physiological information.	***See*** **[7].** **Mault discloses that the control system** (*e.g.*, “PDA,” *see* [7.d]) **is further coupled to** (*e.g.*, in “Bluetooth wireless communication with”) **an audio output device capable of communicating** (*e.g.*, an “earring-like device … to give audible feedback to the person”) **at least a part of the processed portion of the physiological information** (*e.g.*, “feedback” indicates whether the person’s blood glucose levels measured by the PDA (*see* [7.c]) “exceeds the upper recommended blood glucose level”). ***E.g.*, Mault** **Mault** further discloses that the “PDA” is in “Bluetooth wireless communication with” an “earring-like device,” which “combine[s] the functionality of a glucose sensor and a device to give audible feedback to the person.” [0080]. The “earring-like device” functions “as an extension of the PDA” and thus provides feedback from the PDA in an audible form, such as “[f]eedback, generated by a specialist or computer expert system” that was “transmitted to the PDA.” [0077], [0080]. For example, this feedback includes whether the person’s blood glucose level measured by the PDA

’868 Claim	U.S. Publication No. 2003/0208113A1 (“Mault”)
	“exceeds the upper recommended blood glucose level.” [0074], [0077], [0079]-[0080], [0136]. Anthony, ¶¶128-30. • **[0080]:** “***Functionalities of system elements can be combined***.… An ***earring-like device*** could ***combine the functionality of a glucose sensor*** and a device ***to give audible feedback to the person***, perhaps ***as an extension of the PDA, and in for example Bluetooth wireless communication with it.*** The PDA may have a plug in module which analyzes blood. Other combinations are possible.” • ***See also*** **[0074], [0077], [0079], [0112], [0129], [0136], [0175]**

B. Ground 2: Mault in view of Mitsui (Claim 9)

Claim 9 recites: “The diagnostic system of claim 7, wherein at least the portion of the input light beam is adapted for use in a diagnostics to measure a property of the blood, wherein the diagnostics comprise a spectroscopic procedure, wherein the spectroscopic procedure is based at least in part on a comparison of amplitudes at a plurality of associated wavelengths transmitted or reflected from the blood.”

As explained above (§IX.A.2), **Mault** discloses the limitations of claim 7. Anthony, ¶131.

Mault further discloses that at least the portion of the input light beam (*e.g.*, “wavelengths…transmitted through…blood-containing tissue,” *see* [7.a]) **is adapted for use in a diagnostics to measure a property of the blood** (*e.g.*,

"wavelengths … transmitted through or reflected by blood-containing tissue" are "used to compute the blood glucose level of the person," *see* [7.b])[14]**, wherein the diagnostics comprise a spectroscopic procedure** (*e.g.*, "non-invasive spectroscopic technique[s]" used to "measure blood glucose"). [0013], [0020], [0073]. Anthony, ¶132.

Mitsui further discloses a procedure (*e.g.*, analyzing light wavelength intensities to "determine the amount of glucose" in a person's blood) **that is based at least in part on a comparison of amplitudes** (*e.g.*, "determining the ratio of the light intensities of λ1 and λ2") **at a plurality of associated wavelengths** (*e.g.*, "wavelength λ1," "wavelength λ2," and "wavelength λ3") **transmitted or reflected from the blood** (*e.g.*, "transmitted or reflected by a living body," including the

[14] Regardless of the outer bounds of the term "adapted for use in a diagnostics," the scope of this term must at least include **Mault's** disclosures as they correspond the '868's embodiment(s) covered by this term. *See, e.g.*, '868, 3:21-28, 3:46-54; Mault, [0073]. [0151], [0003], [0008]-[0009], [0018]-[0019], [0022]-[0023]. Anthony, ¶140.

"blood flow at the light irradiation site")[15]. [0007]. Anthony, ¶133.

Mault discloses a "blood analysis sensor" 12 that is "built into a module which plugs into the PDA" that "us[es] non-invasive spectroscopic technique[s] to measure blood glucose." [0073]. Mault states that "sensor 12" may use "spectroscopy techniques to measure blood glucose, for example, as described in U.S. Pat. Nos. 6,067,463 (Jeng), 6,049,727 (Crothal[l]), 5,660,163 (S[c]hulman), and others." [0073]; *see also* Ex.1011 (Crothall), 7:31-44, 8:48-52; Ex.1010 (Jeng), 5:66-6:10, 13:60-14:3; Ex.1012 (Schulman), 6:51-7:32, 7:66-8:12. For example, as Crothall explains, the spectroscopy techniques involve "directing electromagnetic radiation or light energy (hereafter, 'light') containing a plurality of different infrared wavelengths … through the body fluid" and "detect[ing] relative differences in absorptivity … from one wavelength to the next in order to measure relatively dilute substances in a body fluid, such as glucose in blood." Crothall, 7:31-44, 8:48-

[15] Regardless of the outer bounds of the term "a plurality of associated wavelengths transmitted or reflected from the blood," **Mault** in view of **Mitsui** renders obvious the indisputable scope of this term consistent with the '868's embodiments covered by this term. *See, e.g.*, '868, 3:21-28, 3:46-54; Mault, [0073]. [0151], [0003], [0008]-[0009], [0018]-[0019], [0022]-[0023]; Mitsui, [0007], [0009]. Anthony, ¶¶140-41.

52. Anthony, ¶134.

Mitsui is directed to a sensor for detecting and measuring glucose levels in a person's blood. [0001], [0006], [0007], [0009], [0015]. **Mitsui** discloses a "glucose sensor" with a "light emitting means" and a "detecting means for detecting the intensity of the light … transmitted or reflected by a living body" such as a "photodetector." [0007], [0009]. For example, **Mitsui** discloses "determining the ratio of the light intensities" of multiple wavelengths (e.g., "wavelength λ1," "wavelength λ2," and "wavelength λ3"), which involves a comparison of amplitudes because the amplitude of light waves determines intensity and intensity is directly correlated to the amplitude of a light wave. [0007]. Anthony, ¶135.

Mault and **Mitsui** are analogous art, in the same field as the '868, which includes diagnostic medical devices, and are reasonably pertinent to the problems addressed by the '868, e.g., using light-based procedures to perform medical diagnostics. '868, Abstract, 1:39-51, 1:58-63, 2:25-45, 2:64-3:2, 3:21-28, 4:37-62, 5:44-55, 6:14-31, 10:28-43, 17:18-23, Figs. 1, 2; Mault, Abstract, [0003], [0008], [0013], [0020], [0022], [0073], [0089], [0144], [0146], [0199], [0201], [0208]; Mitsui, [0001], [0002], [0005], [0006], [0007], [0009], [0015]. Anthony, ¶136.

A POSITA would have been motivated to apply **Mitsui's** teachings of comparing a plurality of wavelength intensities for determining glucose levels to **Mault's** blood glucose management system. **Mitsui** teaches comparing the detected

intensities of multiple wavelengths to perform a "non-invasive measurement of glucose concentrations" that are advantageously "less susceptible to variations in the measurement device and environmental conditions, enabling accurate measurements." **Mitsui**, [0006], [0007]; Mault, [0073], [0089]. Anthony, ¶137. A POSITA would thus have been motivated to apply **Mistui's** teachings of light intensity, or amplitude, comparison of multiple wavelengths for increased accuracy and reliability of **Mault's** blood glucose measurement system. Anthony, ¶137.

Both **Mault** and **Mitsui** teach performing optical physiological measurements using multiple wavelengths of light, and comparing detected light intensities as a means for measuring glucose in the blood was well known in the art.[16] Anthony, ¶138. Accordingly, a POSITA would have had a reasonable expectation of success applying **Mitsui's** teachings to **Mault's** spectroscopic detection, and a POSITA would have known that the combination (yielding the claimed limitations) would predictably work and provide the expected functionality. Anthony, ¶138.

Thus, a POSITA would have found it routine, straightforward and advantageous to apply **Mitsui's** teaching of wavelength intensity comparison to **Mault's** spectroscopic techniques, and would have known such a combination (yielding the claimed limitations) would predictably work and provide the expected

[16] *See, e.g.*, Ex.1008 (Kuestner), Abstract, 5:32–47, 6:16–39. Anthony, ¶138.

functionality. Anthony, ¶139.

C. Grounds 3-4: Grounds 1-2 in view of Pologe (Claims 7-11, 14)

1. Overview of Pologe

Pologe discloses a "photoplethysmographic measurement system"—a system that measures changes in volume in a part of the body using optically obtained data—"that utilizes wavelength division multiplexing" to "noninvasively measure various blood analytes in a test subject." Pologe, 1:11-17, 2:8-11, 4:20-22, 4:32-36. Anthony, ¶142. Multiplexing combines multiple signals into a single signal, which increases the efficiency of transmission by requiring only one transmission channel. *Id.* The wavelength division multiplexing is performed by a "wavelength division multiplexing (WDM) coupler" "such as those using lenses" to "produc[e] a wavelength multiplexed pulse on a single light guide." Pologe, 3:38-55, 3:65-4:4. Anthony, ¶142.

Figure 1 illustrates an embodiment of **Pologe's** measurement system. 4:33-34. The measurement system includes an "optical coupler 22," which can be "any of a number of different types of wavelength division multiplexing (WDM) couplers … such as WDM couplers using lenses." 5:44-59. The measurement system also includes a main test unit with an "input device 34, such as … a touch screen." 4:63-5:9. Anthony, ¶143.

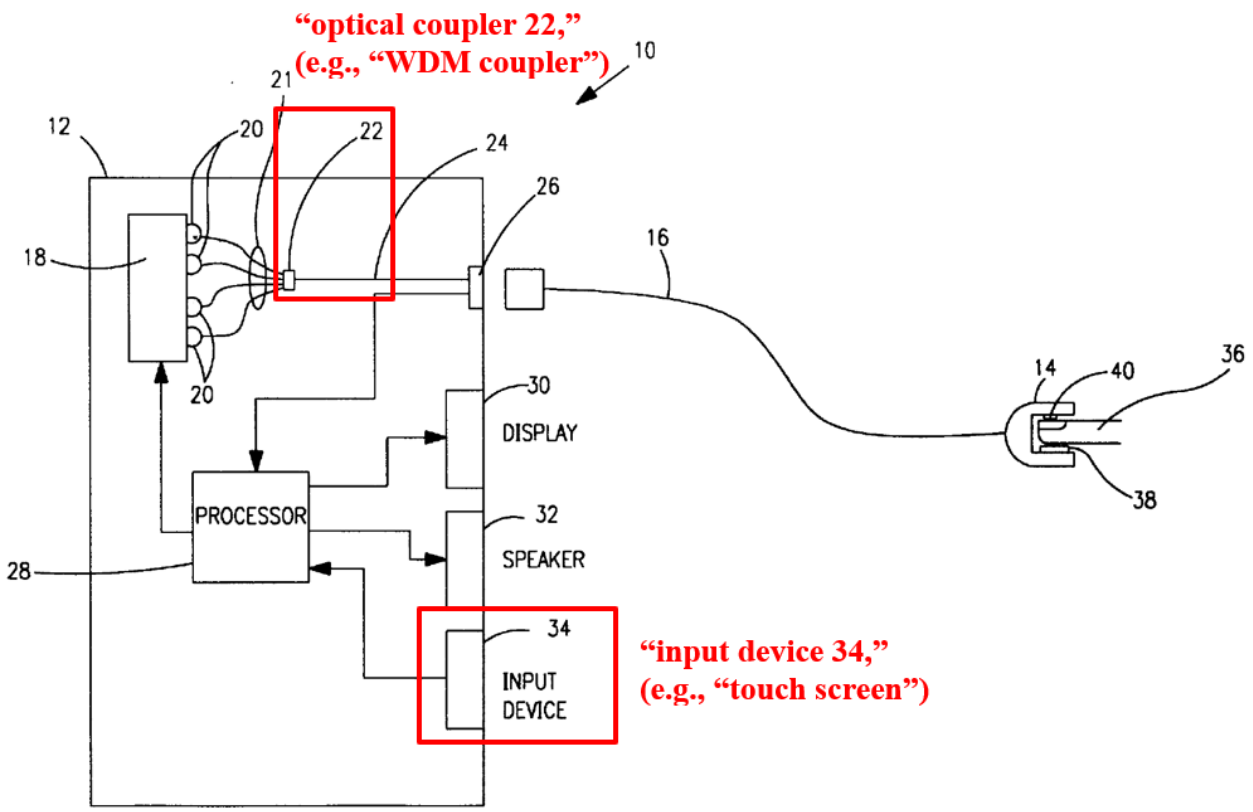

FIG. 1

Pologe, Fig. 1 (annotated). Anthony, ¶143.

2. Motivation to Combine Mault with Pologe

Mault and **Pologe** are analogous art, in the same field as the '868, which includes diagnostic medical devices, and are reasonably pertinent to the problems addressed by the '868, e.g., using light-based procedures to perform medical diagnostics. '868, Abstract, 1:39-51, 1:58-63, 2:25-45, 2:64-3:2, 4:37-62, 5:44-55, 6:14-31, 8:17-34, 10:28-43, Figs. 1, 2; Mault, Abstract, [0003], [0008], [0013], [0020], [0022], [0073], [0089], [0144], [0146], [0199], [0201], [0208]; Pologe,

Abstract, 1:63-2:6, 2:8-15, 2:28-44, 3:38-56, 4:1-4:4, 4:20-54, 4:63-5:18. Anthony, ¶144.

Regarding **Pologe's** multiplexer teachings, a POSITA would have been motivated to apply **Pologe's** teaching of wavelength division multiplexing (WDM) couplers to **Mault's** "blood glucose sensor" with "at least one semiconductor laser or light emitting diode" to combine multiple light signals into a single multiplexed signal, which "reduce[s] system implementation cost and increase[s] flexibility" of signal transmission means used. Pologe, Abstract, 1:63-2:6, 3:65-4:4; Mault, [0020], [0073], [0089]. In particular, **Pologe** teaches using WDM couplers to combine multiple light signals into a single signal because "it is advantageous to reduce the number of signal carriers in the signal transmission means" to keep "the signal transmission means [] as lightweight and flexible as possible" and reduce cost of making the signal transmission means, which "must be replaced periodically" and thus should be "relatively inexpensive to produce." Pologe, 1:63-2:6. A POSITA would also have recognized that applying **Pologe**'s WDM coupler teachings to **Mault's** "blood glucose sensor" would minimize system complexity, allowing decreased production and maintenance costs and simplified maintenance procedures. Anthony, ¶145.

Regarding **Pologe's** lens system teachings employed by **Pologe's** WDM coupler, a POSITA would have been motivated to apply **Pologe's** lens teachings to

the LED(s) in **Mault's** "blood glucose sensor" to advantageously improve the accuracy of **Mault's** blood glucose measurements. Pologe, 1:55-58, 3:38-55, 3:65-4:4, 4:24-31, 5:44-59; Mault, [0020], [0073], [0089]. As **Pologe** teaches, "the path a light signal takes through the tissue under test can affect the accuracy of the measurement," so "it is important that all light pulses be directed into the tissue from essentially a single point" by using the lens to help focus and direct the light into the target tissue of the subject. Pologe, 1:55-58, 3:38-55. Anthony, ¶146.

A POSITA would have had a reasonable expectation of success in applying **Pologe's** teachings of a multiplexer with a lens, such as a wavelength division multiplexing (WDM) coupler, to **Mault's** sensor with LEDs. Indeed, both **Mault** and **Pologe** teach optical physiological monitoring systems utilizing LEDs as light sources, and using multiplexers to generate multiplexed emissions from LEDs was well known in the art, [17] such that a POSITA would have found it routine, straightforward, and advantageous to apply **Pologe's** teachings of a WDM coupler with lenses to **Mault's** LED-based blood glucose sensor. Mault, [0020], [0073], [0089]; Pologe 1:63-2:6, 3:38-55, 3:65-4:4, 4:24-31, 5:44-59. Anthony, ¶147. Thus, a POSITA would have known such a combination (yielding the claimed limitations) would predictably work and provide the expected functionality. Anthony, ¶147.

[17] *See, e.g.*, Ex.1009 (Nosu), 1:6-11, 1:38-39, 6:4-20. Anthony, ¶147.

Regarding **Pologe's** touch screen teachings, a POSITA would also have been motivated to apply **Pologe's** teaching of a touch screen in the display to receive user input commands to **Mault's** electronic device 240. **Mault** teaches a "manual entry of data into the PDA using any input mechanism, such as keys, a stylus, voice recognition, and the like," and a POSITA would have looked to other input mechanisms. Mault, [0074]. **Pologe** teaches that a "touch screen" is a means "for allowing the user to input commands and other information to the processor unit." Pologe, 4:63-5:9. Thus, a POSITA would have incorporated **Pologe's** touch screen into **Mault's** electronic device 240, such as a PDA, for additional convenience and ease of use.[18] Pologe, 4:63-5:9; Mault, [0074]. Anthony, ¶148.

A POSITA would have had a reasonable expectation of success in applying **Pologe's** teachings of a touch screen to **Mault's** electronic device 240. Both **Mault** and **Pologe** teach devices capable of performing processing, having a display function, and receiving inputs from users. Mault, [0074]; Pologe 4:63-5:9. Indeed, using touch screens as a means through which users can input data or commands was well known in the art, such that a POSITA would have found it straightforward and advantageous to apply **Pologe's** touch screen to **Mault's** electronic device 240,

[18] *See, e.g.*, Causey, 18:24-28; Currans, 2:46-49. Anthony, ¶148.

such as a PDA.[19] Anthony, ¶149. Thus, a POSITA would have known such a combination (yielding the claimed limitations) would predictably work and provide the expected functionality. Anthony, ¶149.

Pologe's teachings concern using WDM coupler to direct the output light and input mechanisms and incorporating a touch screen into the display of **Mault's** electronic device and **Mitsui's** teaching concerns a wavelength amplitude comparison technique (§IX.B) such that the above-discussed motivations and reasonable expectation of success would remain the same for **Mault's** system alone or in view of **Mitsui**. Anthony, ¶150.

3. Claim Mappings

a. Claim 7

As discussed above in Ground 1, **Mault** discloses and at least renders obvious all limitations of claim 7. *See* Section IX.A.2.[7.pre]-[7.f]. To the extent further disclosure is required for "a lens system" of [7.b] and "touch-screen" of [7.e], **Pologe** discloses those limitations, as discussed further below. Anthony, ¶151.

[7.b]: "a lens system configured to receive at least a portion of the input light beam and to communicate at least the portion of the input light beam onto a part of a user's body comprising blood, wherein at least the portion of

[19] *See, e.g.*, Causey, 18:24-28; Currans, 2:46-49. Anthony, ¶149.

the input light beam is used in a measurement on a user;"

As discussed in §IX.A.2.[7.b], **Mault discloses and renders obvious [7.b]; including because its** "blood glucose sensor" with LED(s) teaches and at least renders obvious **"lens system configured to receive at least a portion of the input light beam."** Anthony, ¶¶152-53.

To the extent additional disclosure is required, Pologe discloses a "lens system" (e.g., "lenses" within "WDM coupler") **configured to receive at least a portion of the input light beam** (e.g., "light pulses" from "light sources, such as light emitting diodes"). Pologe, 3:57-4:4. Anthony, ¶154.

Pologe discloses that a "WDM coupler is capable of producing a wavelength multiplexed pulse" from the "light pulses" of "multiple separate light sources, such as light emitting diodes (LEDs)" and that these WDM couplers "can include any of a number of coupler types, such as those using lenses." Pologe, 3:57-59, 3:63-4:4. The WDM coupler then directs the light onto an "appendage of a person being tested, such as a finger" and "the received light pulses" that travel through the finger are "processed to determine the level of one or more blood analytes in the person's arterial blood." Pologe, 4:40-46. Anthony, ¶155.

As discussed in §IX.C.2, a POSITA would have been motivated to apply **Pologe's** teaching of WDM coupler with "lenses" to the LED(s) in **Mault's** "blood

glucose sensor" to more efficiently direct wavelength multiplexed light outputs onto a sample for blood glucose measurements and improve the accuracy of those measurements. This would apply to **Mault** alone, or in view of **Mitsui.** §§IX.A-B. Anthony, ¶156.

[7.e]: "the control system having a touch-screen, circuitry for obtaining position information from a location sensor, and a wireless transceiver to transmit wireless data over a wireless link, the wireless data comprising at least a part of the physiological information, wherein the control system is further capable of receiving voice input signals and manually entered input signals; and

As discussed in [7.e], **Mault** teaches and at least renders obvious the "touch-screen" limitation. Anthony, ¶¶157-58.

To the extent additional disclosure is required, Pologe discloses a "touch-screen" (*e.g.*, "an input device 34 such as…a touch screen"). Pologe 4:63-5:9. Anthony, ¶159.

Pologe discloses that a "main test unit 12" that includes "an input device 34, such as a keypad or a touch screen, for allowing the user to input commands and other information to the processor unit." Pologe, 4:63-5:9. Anthony, ¶160.

As discussed in §IX.C.2, a POSITA would have been motivated to apply **Pologe's** teaching of a touch screen to **Mault's** electronic device (e.g., PDA) as a straightforward and convenient means through which users can input data or

commands to a display. This would apply to **Mault** alone, or in view of **Mitsui.** *See* §§IX.A-B. Anthony, ¶161.

b. Claim 8: The diagnostic system of claim 7, wherein the light source comprises a plurality of semiconductor diodes that are further coupled to a multiplexer capable of combining the plurality of semiconductor diodes and generating the input light beam comprising one or more wavelengths.

As discussed in Ground 1 above (§§IX.A.2.[7.pre]-[7.f])**, Mault** discloses and at least renders obvious the diagnostic system of claim 7. Anthony, ¶¶162-63.

Mault further discloses the light source comprises a plurality of semiconductor diodes (*e.g.*, "at least one semiconductor laser or light emitting diode," *see* [7.a]). [0020]. As discussed in [7.pre]-[7.a] above (§§IX.A.2.[7.pre]-[7.a]), **Mault** discloses the "blood glucose management system[]" includes a "blood glucose sensor" that "us[es] at least one semiconductor laser or light emitting diode to emit wavelengths in the near-IR." [0013]. Anthony, ¶164.

Pologe discloses a multiplexer capable of combining the plurality of semiconductor diodes (*e.g.,* "a wavelength division multiplexing (WDM) coupler for combining the light signals from the plurality of emitters into a single light

signal") [20] **and generating the input light beam comprising one or more wavelengths** (*e.g.,* "producing a wavelength multiplexed pulse on the single light guide")[21]. 3:38-55, 3:65-4:4. Anthony, ¶165.

Pologe further discloses "a wavelength division multiplexing (WDM) coupler for combining the light signals from the plurality of emitters into a single light signal, wherein the WDM coupler is capable of simultaneously receiving multiple light

---

[20] Regardless of the outer bounds of the term "a multiplexer capable of combining the plurality of semiconductor diodes," the term's scope must at least include **Pologe's** disclosures as **Pologe** discloses (1) grouping semiconductor diodes, and (2) combining light outputs from semiconductor diodes. *See, e.g.*, '868, 22:60-65, 23:3-9, Fig. 9C; Pologe, 3:38-55, 5:51-53, 5:44-59. Anthony, ¶168.

[21] Regardless of the outer bounds of the term "generating the input light beam comprising one or more wavelengths," **Mault** alone or in view of **Pologe** meets the indisputable scope of this term because **Mault** discloses (1) ***each*** input light beam from each individual semiconductor diodes comprising one or more wavelengths, and **Mault** in view of **Pologe** renders obvious (2) ***together***, the single input light beam combining those from one or more semiconductors comprising one or more wavelengths. *See, e.g.*, Mault, [0013], [0020]; Pologe, 3:65-4:4, 3:38-55, 5:44-59. Anthony, ¶169.

pulses … and simultaneously coupling the multiple light pulses [into] … a single light pulse." 3:38-55, 5:44-59. The WDM coupler thus "is capable of producing a wavelength multiplexed pulse on the single light guide." 3:65-4:4. Additionally, **Pologe** further discloses "active WDM couplers[,] such as those including cascaded or parallel emitters on a single substrate" such that emitters (i.e., light sources such as semiconductor diodes) are grouped together. 5:51-53. Anthony, ¶166.

As discussed in §IX.C.2, a POSITA would have been motivated to apply **Pologe's** teaching of a multiplexer, such as a WDM coupler, to **Mault's** sensor as an efficient and straightforward means for producing wavelength multiplexed light outputs for blood glucose measurements. This would apply to **Mault** alone, or in view of **Mitsui.** §§IX.A-B. Anthony, ¶167.

D. Grounds 5-8: Grounds 1-4 in view of Kiani (Claims 7-11, 13-14)

1. Element [7.e]

Element [7.e] recites **"circuitry for obtaining position information from a location sensor."**

As discussed in connection with [7.e], **Mault discloses and at least renders obvious the "circuitry for obtaining position information from a location sensor"** (e.g., "global positioning system (GPS)" on PDA includes circuitry to obtain location information from sensors used for "determining location"). *See* §IX.A.2.[7.e]. Anthony, ¶¶170-71.

To the extent further disclosure is required for "location sensor" (recited in [7.e]), Kiani discloses a "location sensor" (e.g., "contact sensor 343" indicating whether the "optical probe" of the "pulse oximeter" has been "partially or completely dislodged from the patient"). Kiani, Abstract, 1:10-14, 1:52-67, 4:28-51, 5:37-62, Fig. 3A, 3D, 3E. Anthony, ¶172.

Kiani discusses a pulse oximeter 140 with an "optical probe 202" worn over a person's finger to detect blood oxygen levels in a person's blood. 2:65-3:2, 3:50-55. As shown in Figure 3E (annotated below), the pulse oximeter includes a "probe-off detector module 138," which receives position information from "contact sensor 343" to reduce measurement inaccuracies from when a "probe-off condition occurs" and "the probe detector receiv[es] light directly from the emitters." Kiani, 4:38-51, 5:50-62, Fig. 3E, 3A. Anthony, ¶173.

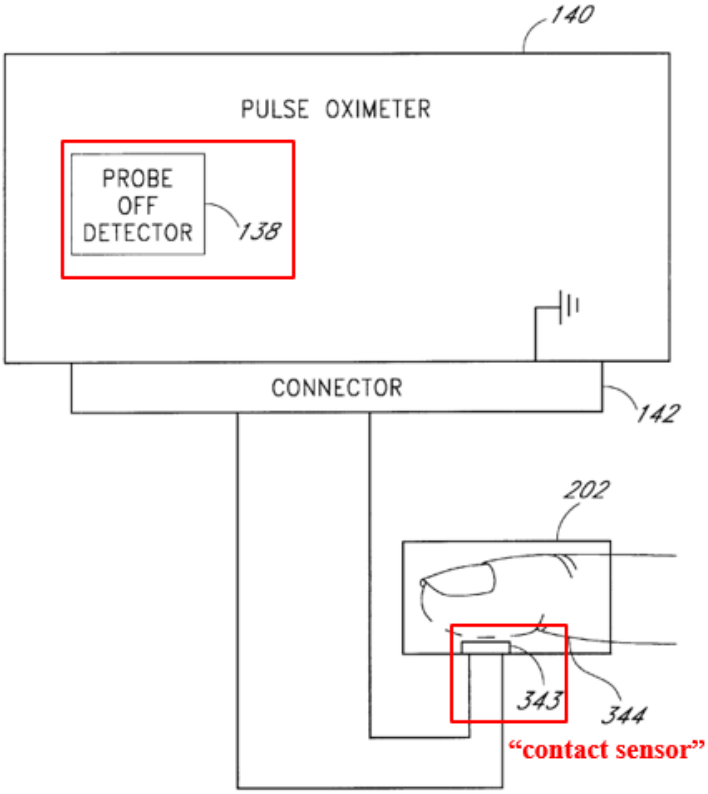

FIG.3E

Kiani, Fig. 3E (annotated). Anthony, ¶173.

In particular, the detector module 138 uses contact sensor 343 to determine "when the optical probe becomes partially or completely dislodged from the patient" thus leading to errors in the measurements. Kiani, Abstract, 1:10-14, 1:52-67, 4:28-51, 5:50-62, Fig. 3A, 3D. Thus, **Kiani's** contact sensor is a location sensor that provides information about the optical probe's relative position to the patient's finger in order for the "probe-off condition" to be detected. Kiani, 4:28-51, 4:56-65, 5:50-62. Anthony, ¶174.

As **Kiani** teaches, the detector module determines when the pulse oximeter

probe is detecting light "directly from the emitters without transmission through the patient's tissue," such that these signals are not "processed as a physiological signal" and interfere with the accuracy of the measurements. Kiani, 4:28-38, 5:37-49. Anthony, ¶175.

Mault and **Kiani** are analogous art, in the same field as the '868, which includes diagnostic medical devices, and are reasonably pertinent to the problems addressed by the '868, e.g., using light-based procedures to perform medical diagnostics. '868, Abstract, 1:39-51, 1:58-63, 2:25-45, 2:64-3:2, 3:21-28, 4:37-62, 5:44-55, 6:14-31, 10:28-43, Figs. 1, 2; Mault, Abstract, [0003], [0008], [0013], [0020], [0022], [0073], [0089], [0144], [0146], [0199], [0201], [0208]; Kiani, Abstract, 1:10-14, 1:52-67, 2:65-3:15, 3:20-49, 4:28-51, 5:37-49. Anthony, ¶176.

A POSITA would have been motivated to apply **Kiani's** teachings of a contact sensor to **Mault's** physiological sensor to detect when the physiological sensor worn on the person is dislodged, to advantageously improve the accuracy of physiological measurements caused by dislodged physiological sensors, as taught by **Kiani**. For example, **Mault** discloses that its PDA "may communicate or otherwise receive data from physiological sensors or monitors carried by the person," and that "sensors" are "appropriately located for transmission of useful information to the PDA." Mault, [0208], [0201]. Like the pulse oximeter in **Kiani**, **Mault** discloses that an example of the "physiological sensor" is a "pulse rate sensor." Mault, [0111]. As

Mault discloses, its "PDA is used to receive and store activity-related data," such as "receiving signals from a body mounted accelerometer…a similar device (or devices) which provides a signal (or signals) related to the activity level of the person." [0198]. For example, **Mault** discloses that its "PDA…receive[s] positional" data and "data from physiological monitors which obtain information related to physical activity." [0198]. **Mault** is also interested in "improv[ing] the accuracy of [its] glycemic response model." [0044]. Anthony, ¶177.

In light of these disclosures, to improve the accuracy of **Mault's** physiological measurements, a POSITA would have been motivated to modify **Mault's** "physiological sensor" according to **Kiani's** contact sensor teachings to detect when the physiological sensor is dislodged from the user's body. To apply this modification, a POSITA would have further modified **Mault's** PDA to receive data from the modified physiological sensor mounted on the patient's body, which would include information regarding the position of the physiological sensor relative to the patient's skin to indicate whether the sensor is dislodged, thereby reducing erroneous readings and improving the accuracy of the measurements. Kiani, 4:28-38, 5:37-49; Mault, [0042], [0073], [0208]. Anthony, ¶178.

A POSITA would have had a reasonable expectation of success in applying **Kiani's** teachings of a contact sensor to **Mault's** physiological sensor. Indeed, **Mault** already discloses that its PDA includes "sensors" for "determining location"

using a "positioning method." Mault, [0208], [0198]. And both **Mault** and **Kiani** teach physiological sensors, such as pulse rate oximeters, which take measurements by being placed on a user's skin. *See, e.g.*, Mault, [0073], [0089], [0201]; [0111]; Kiani, 2:65-3:2, 3:50-55, 4:28-51 5:50-62. Thus, it would have been straightforward and routine to modify **Mault's** "physiological sensor" according to **Kiani's** contact sensor teachings to advantageously provide positional information to **Mault's** PDA indicating if the physiological sensor has been dislodged from the user's skin. Using contact sensors to determine if a sensor is in contact with a user's body was known in the art.[22] Anthony, ¶179.

Kiani's teachings concern a contact sensor in **Mault's** physiological sensor while **Mitsui's** teaching concerns a wavelength amplitude comparison technique for **Mault's** spectroscopic procedure (§IX.B), and **Pologe's** teachings concern using WDM coupler to direct the output light and input mechanisms and incorporating a touch screen into the display of **Mault's** electronic device (§IX.C), such that the above-discussed motivations and reasonable expectation of success would remain the same for **Mault's** system alone or in view of **Mitsui** and/or **Pologe**. Anthony, ¶180.

---

[22] *See, e.g.*, Ex.1023 (Stivoric), 37:47-56; Ex.1038 (Berman), 6:34-37, 9:33-63. Anthony, ¶179.

Thus, a POSITA would have found it routine, straightforward and advantageous to apply **Kiani's** teaching of a contact sensor to **Mault's** (alone or in view of **Mitsui** and/or **Pologe**) measurement system, and would have known such a combination (yielding the claimed limitations) would predictably work and provide the expected functionality. Anthony, ¶181.

2. Claim 13

Claim 13 recites: **"The diagnostic system of claim 7, wherein the control system is further coupled to a proximity sensor."**

As explained above in connection with claim 7 (§§IX.A.2.[7.pre]-[7.f]), **Mault discloses and at least renders obvious the claim 7**. Anthony, ¶¶182-83.

As discussed in connection with [7.e] above, **Mault in view of Kiani render obvious the control system** (*e.g.*, **Mault's** "PDA") **is further coupled to a proximity sensor** (*e.g.*, **Mault's** "physiological sensor" modified to detect when it is dislodged from the user's skin based on **Kiani's** contact sensor teachings). *See also* §IX.D.[7.e]. Anthony, ¶184.

As discussed in [7.e] above, the proposed modification of **Mault** based on **Kiani's** teachings yields a system where **Mault's** "PDA" is coupled to a "physiological sensor," which is modified according to **Kiani's** contact sensor teachings to detect when the physiological sensor is dislodged from the user's skin. As such, the modified physiological sensor is a proximity sensor because it provides

information about the sensor's relative position to a person's skin a target skin.[23] Anthony, ¶¶185-86.

For the same reasons I discussed above in relation to [7.e] (*see* Section IX.D.[7.e]), a POSITA would thus have been motivated to apply **Kiani**'s teaching of a contact sensor, which is a proximity sensor, to **Mault's** physiological sensor to advantageously detect when the physiological sensor worn on the person in **Mault** is dislodged and thus mitigate any resulting measurement distortions, and would have found a reasonable expectation of doing so. Anthony, ¶187.

X. SECONDARY CONSIDERATIONS

There is no evidence in the '868's prosecution history or elsewhere supporting any secondary considerations arguments, or evidence of nexus to any challenged Claim. *See generally* '868FH; Anthony, ¶188. Indeed, as demonstrated by the prior art referenced herein, any purported solutions to problems or unexpected results in the '868 were already well known. Anthony, ¶188.

To the extent that PO contends that the accused products in the Texas Case are infringing and thus demonstrate commercial success, any such conclusory allegations would fail to provide any indication that the Claims are non-obvious. Such conclusory assertions would not demonstrate that Petitioners' products infringe,

[23] *See, e.g.*, Ex.1023 (Stivoric), 6:45-53, 37:47-56. Anthony, ¶186.

let alone show any nexus between any alleged commercial success and the Claims, or that any alleged success is due to an allegedly claimed component instead of the many unclaimed features of the accused products. To the extent PO asserts the existence of any secondary considerations in its responses, Petitioners reserve the right to address any such evidence. Anthony, ¶189.

XI. CONCLUSION

Substantial, new, and noncumulative technical teachings have been presented for each Challenged Claim, which are rendered obvious for the reasons set forth above. Anthony, ¶¶73-192. There is a reasonable likelihood Petitioners will prevail as to each of these Claims. *Inter partes* review of Claims 7-11, 13-14 of the '868 is accordingly requested.

Dated: August 5, 2025

Respectfully submitted,

By: /*James L. Davis, Jr.*/
Name: James L. Davis, Jr.
Registration No. 57,325
ROPES & GRAY LLP

Lead Counsel for Petitioners

CERTIFICATE OF COMPLIANCE

Pursuant to 37 C.F.R. § 42.24(a) and (d), the undersigned hereby certify that the Petition For *Inter Partes* Review complies with the type-volume limitation of 37 C.F.R. § 42.24(a)(i) because, exclusive of the exempted portions, it contains 13,360 words as counted by the word processing program used to prepare the paper.

Dated: August 5, 2025

Respectfully submitted,

By: /*James L. Davis, Jr.*/
Name: James L. Davis, Jr.
Registration No. 57,325
ROPES & GRAY LLP

Lead Counsel for Petitioners

CERTIFICATE OF SERVICE

I hereby certify that on August 5, 2025, I caused a true and correct copy of the foregoing Petition for *Inter Partes* Review of U.S. Patent No. 9,055,868 and supporting exhibits to be served via Federal Express on the Patent Owner at the following correspondence address of record as listed on Patent Center:

109543 - Brooks, Kushman P.C./Cheetah Omni MedSci
150 W 2nd St., Suite 400N
Royal Oak, MI 48067
UNITED STATES

A courtesy copy was also sent via electronic mail to Patent Owner's litigation counsel at the following addresses:

William E. Davis III
bdavis@davisfirm.com
DAVIS FIRM, PC

Daniel S. Stringfield
dstringfield@nixonpeabody.com
Timothy P. Maloney
tmaloney@nixonpeabody.com
Daniel D. Georgiev
dgeorgiev@nixonpeabody.com
Peter Krusiewicz
pkrusiewicz@nixonpeabody.com
NIXON PEABODY LLP

Corey T. Leggett
cleggett@nixonpeabody.com
NIXON PEABODY LLP

Elizabeth M. Chiaviello
echiaviello@nixonpeabody.com
Benjamin R. Holt
bholt@nixonpeabody.com
NIXON PEABODY LLP

Dated: August 5, 2025

By: /*James L. Davis, Jr.*/
Name: James L. Davis, Jr.
Registration No. 57,325
Lead Counsel for Petitioners