Trials@uspto.gov
571-272-7822

Paper No. 16
Filed: October 18, 2019

UNITED STATES PATENT AND TRADEMARK OFFICE

BEFORE THE PATENT TRIAL AND APPEAL BOARD

APPLE INC.,
Petitioner,

v.

OMNI MEDSCI, INC.,
Patent Owner.

Case IPR2019-00916
Patent 9,651,533 B2

Before GRACE KARAFFA OBERMANN, JOHN F. HORVATH, and SHARON FENICK, *Administrative Patent Judges.*

HORVATH, *Administrative Patent Judge*.

DECISION
Granting Institution of *Inter Partes* Review
35 U.S.C. § 314(a)

I. INTRODUCTION

A. Background

Apple Inc. ("Petitioner") filed a Petition requesting *inter partes* review of claims 5, 7–10, 13, and 15–17 ("the challenged claims") of U.S. Patent No. 9,651,533 B2 (Ex. 1001, "the '533 patent"). Paper 1 ("Pet."), 3. Omni MedSci Inc. ("Patent Owner"), filed a Preliminary Response. Paper 10 ("Prelim. Resp."). We have jurisdiction under 35 U.S.C. § 314.

Upon consideration of the Petition and Preliminary Response we are persuaded that Petitioner has demonstrated a reasonable likelihood that it would prevail in showing the unpatentability of at least one challenged claim of the '533 patent. Accordingly, we institute *inter partes* review of all challenged claims on all grounds raised.

B. Related Matters

Petitioner and Patent Owner identify the following as matters that can affect or be affected by this proceeding: pending U.S. Patent Application Nos. 10/188,299, 10/172,523, 15/594,053, 16/015,737, and 16/241,628; *Apple Inc. v. Omni MedSci Inc*., IPR2019-00913 (PTAB); and *Omni MedSci Inc. v. Apple Inc.*, 2-18-cv-00134-RWD (E.D. Tex.).[1] *See* Pet. x; Paper 7, 1–2.

[1] This case was transferred to the Northern District of California, however, that Court has not yet provided a new case number. *See* Paper 11, 1; Paper 13, 1; Ex. 1058, 9.

C. Evidence Relied Upon[2]

Reference		Date	Exhibit
Mannheimer	U.S. 5,746,206	May 5, 1998	1008
Carlson	U.S. 2005/0049468 A1	Mar. 3, 2005	1009
Lisogurski	U.S. 9,241,676 B2	May 31, 2012[3]	1011

D. Asserted Grounds of Unpatentability

Claims Challenged	Basis	References
5, 7–10, 13, and 15–17	§ 103(a)	Lisogurski and Carlson
8, 9, 16, and 17	§ 103(a)	Lisogurski, Carlson, and Mannheimer

II. ANALYSIS

A. The ’533 Patent

The ’533 patent was filed on October 6, 2015, and claims priority to a utility application filed on December 17, 2013 and a provisional application filed on December 31, 2012. Ex. 1001 codes (22), (60), (63), 1:10–14. The ’533 patent is directed toward a wearable physiological measurement system. *Id.* code (57). The system is depicted in Figure 24 of the ’533 patent, which is reproduced below.

[2] Petitioner also relies upon the Declaration of Brian Anthony, Ph.D., (Ex. 1003).

[3] Petitioner relies on the filing date of Lisogurski to establish its status as prior art. *See* Pet. 21.

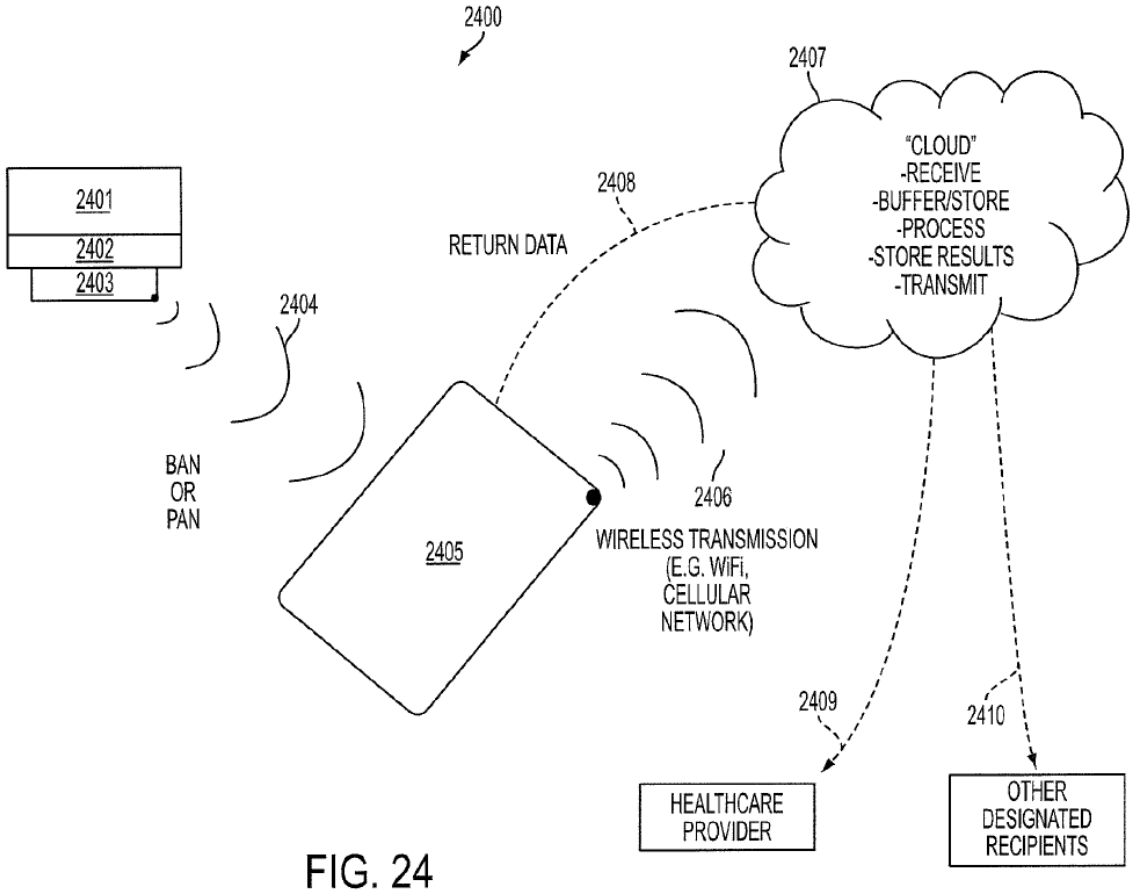

FIG. 24

Figure 24 is a schematic illustration of a physiological measurement system. *Id*. at 7:7–10. The system includes wearable measurement device 2401, personal device 2405, and cloud based server 2407. *Id.* at 26:49–27:20.

The "wearable measurement device [is] for measuring one or more physiological parameters." *Id*. at 5:35–37. A schematic illustration of such a measurement device is shown in Figure 18 of the '533 patent, which is reproduced below.

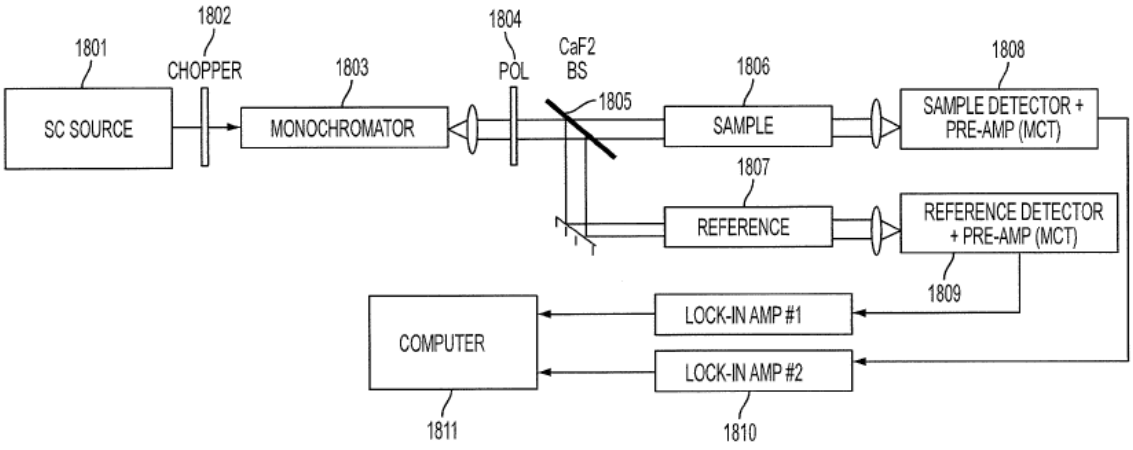

FIG. 18

Figure 18 is a schematic diagram of a device for measuring physiological parameters that may be used to "subtract out (or at least minimize the adverse effects of) light source fluctuations." *Id.* at 18:43–46.

Wearable measurement device 2401 includes light source 1801 made from a plurality of light emitting diodes that generate an output optical beam at one or more optical wavelengths, wherein at least one of the optical wavelengths is between 700 and 2500 nanometers. *Id.* at 5:37–43, 18:46–48. The light source can increase a signal-to-noise ratio by increasing either the LED intensity or pulse rate. *Id.* at 5:43–47. Wearable measurement device 2401 also includes a plurality of lenses that receive a portion of the output optical beam from the light source and deliver an analysis beam to a sample. *Id.* at 5:47–50. Lastly, wearable measurement device 2401 includes a receiver that receives at least a portion of the analysis beam that has been reflected from or transmitted through the sample, and processes that signal to generate an output signal. *Id.* at 5:51–54.

The physiological measurement system also includes personal device 2405 having a wireless receiver, a wireless transmitter, a display, a microphone, a speaker, one or more buttons or knobs, a microprocessor and a touch screen. *Id.* at 5:54–59, 27:3–7. Personal device 2405 receives and processes at least a portion of the output signal generated by wearable measurement device 2401, and stores and displays the processed output signal. *Id.* at 5:59–61, 27:10–12. Personal device 2405 also transmits at least a portion of the processed output signal over a wireless transmission link to a remote device, such as an internet or "cloud" based server. *Id.* at 5:61–63, 26:30–34, 27:12–15. Personal device 2405 can be "a smart phone, tablet, cell phone, PDA, or computer," or some "other microprocessor-based device." *Id.* at 26:37–40, 26:49–55.

The physiological measurement system also includes remote device 2407 that receives the at least a portion of the processed output signal transmitted by personal device 2405 as an output status. *Id.* at 5:63–66, 26:30–42, 27:12–15. Remote device 2407 processes the output status to generate and store processed data, and stores a history of the output status over a period of time. *Id.* at 5:66–6:1–3, 27:21–29, 27:34–37.

B. Illustrative Claim

Claim 13 of the '533 patent is an independent and representative claim, and is reproduced below.

> 13. A measurement system comprising:
>
> a wearable measurement device for measuring one or more physiological parameters, including a light source comprising a plurality of semiconductor sources that are light emitting diodes, the light emitting diodes configured to generate an output

optical beam with one or more optical wavelengths, wherein at least a portion of the one or more optical wavelengths is a near-infrared wavelength between 700 nanometers and 2500 nanometers,

the light source configured to increase signal-to-noise ratio by increasing a light intensity from at least one of the plurality of semiconductor sources and by increasing a pulse rate of at least one of the plurality of semiconductor sources;

the wearable measurement device comprising a plurality of lenses configured to receive a portion of the output optical beam and to deliver an analysis output beam to a sample;

the wearable measurement device further comprising a receiver configured to receive and process at least a portion of the analysis output beam reflected or transmitted from the sample and to generate an output signal, wherein the wearable measurement device receiver is configured to be synchronized to the light source;

a personal device comprising a wireless receiver, a wireless transmitter, a display, a microphone, a speaker, one or more buttons or knobs, a microprocessor and a touch screen, the personal device configured to receive and process at least a portion of the output signal, wherein the personal device is configured to store and display the processed output signal, and wherein at least a portion of the processed output signal is configured to be transmitted over a wireless transmission link; and

a remote device configured to receive over the wireless transmission link an output status comprising the at least a portion of the processed

> output signal, to process the received output status to generate processed data and to store the processed data and wherein the remote device is capable of storing a history of at least a portion of the received output status over a specified period of time.

Ex. 1001, 30:46–31:20.

Claim 5 is an independent claim that recites a measurement system that is substantially similar to the measurement system recited in claim 13, but is broader than claim 13 because it does not require the light source, plurality of lenses, and receiver to be components of a wearable measurement device, does not require the measurement of one or more physiological parameters, and does not require the remote device to be capable of storing a history of at least a portion of the received output status over a specified period of time. *Compare id.* at 29:43–30:10, *with id*. at 30:46–31:20. Claims 7–10 depend from claim 5, and claims 15–17 depend from claim 13. *Id*. at 30:15–37, 32:1–18.

C. Level of Ordinary Skill in the Art

Petitioner, relying on the testimony of Dr. Anthony, identifies a person of ordinary skill in the art ("POSITA") as someone who "would have [had] a good working knowledge of optical sensing techniques and their applications, and familiarity with optical system design and signal processing techniques." Pet. 16; Ex. 1003 ¶ 35. Such a person, according to Petitioner, would have obtained such knowledge through "an undergraduate education in engineering (electrical, mechanical, biomedical, or optical) or a related field of study, along with relevant experience studying or developing physiological monitoring devices . . . in industry or academia." *Id*. Patent

Owner does not offer an opinion on Petitioner's definition, either agreeing or disagreeing, and does not offer a counter definition of a person of ordinary skill in the art.

At this stage of the proceeding, and for purposes of this Decision, we find Petitioner's definition to be consistent with the problems and solutions disclosed in the patent and prior art of record, and adopt it as our own. *See, e.g.*, *In re GPAC Inc.*, 57 F.3d 1573, 1579 (Fed. Cir. 1995).

D. Claim Construction

In *inter partes* reviews, we interpret a claim "using the same claim construction standard that would be used to construe the claim in a civil action under 35 U.S.C. 282(b)." 37 C.F.R. § 42.100(b). Under this standard, we construe the claim "in accordance with the ordinary and customary meaning of such claim as understood by one of ordinary skill in the art and the prosecution history pertaining to the patent." *Id.* Only claim terms which are in controversy need to be construed and only to the extent necessary to resolve the controversy. *See Nidec Motor Corp. v. Zhongshan Broad Ocean Motor Co.*, 868 F.3d 1013, 1017 (Fed. Cir. 2017).

Petitioner requests construction of the terms "beam," "plurality of lenses," and "pulse rate." Pet. 18–20. For the reasons discussed below, construction of these terms is not needed to resolve the fundamental controversy between the parties, i.e., whether Petitioner has demonstrated a reasonable likelihood of showing the unpatentability of claims 5, 7–10, 13, and 15–17. *See Nidec*, 868 F.3d at 1017.

1. Light source

Neither party requests construction of the term "a light source comprising a plurality of semiconductor sources that are light emitting

diodes. . . configured to increase signal-to-noise ratio by . . . increasing a pulse rate of at least one of the plurality of semiconductor sources," recited in independent claims 5 and 13. A construction of the term is necessary, however, to resolve the parties' dispute about whether Lisogurski alone or in combination with Carlson discloses such a light source.

The Specification provides scant support for the meaning of "a light source comprising a plurality of semiconductor sources that are light emitting diodes. . . configured to increase signal-to-noise ratio by . . . increasing a pulse rate of at least one of the plurality of semiconductor sources." This exact phrase is repeated in two places, without further explanation of its meaning. Ex. 1001, 5:10–15, 5:43–47.[4] There are no other disclosures in the Specification to illuminate the meaning of this term.

Given the scant disclosures in the Specification, for purposes of this Decision, we construe the term "a light source comprising a plurality of semiconductor sources that are light emitting diodes. . . configured to increase signal-to-noise ratio by . . . increasing a pulse rate of at least one of the plurality of semiconductor sources" to mean "a light source containing two or more light emitting diodes (semiconductor sources), wherein at least one of the light emitting diodes is capable of having its pulse rate increased to increase a signal-to-noise ratio." This construction is supported by the

[4] We note that these phrases were added to the Specification by an amendment dated July 6, 2016, the same date then pending claims 5 and 14 (which issued as claims 5 and 13) were amended to contain the same limitation. *See* Ex. 1002, 495–496, 500–503. The applicant, in its remarks accompanying these amendments, did not indicate where they were supported by the Specification as originally filed. *See id*. at 505-507.

Specification at column 5, lines 10 through 15, and lines 43 through 47, and is consistent with the plain words used in the claim term at issue.[5]

2. Personal device

Neither party requests construction of the "personal device" recited in independent claims 5 and 13. A construction of the term is necessary, however, to resolve the parties' dispute about whether Lisogurski discloses a personal device.

Claim 13 recites a measurement system comprising a wearable measurement device configured to "generate an output signal," a personal device "configured to receive and process at least a portion of the output signal" and to transmit "at least a portion of the processed output signal" over a wireless link, and a "remote device configured to receive over the wireless transmission link an output status comprising at least a portion of the processed output signal." Ex. 1001, 30:64–31:1, 31:4–15. The personal device includes "a wireless receiver, a wireless transmitter, a display, a microphone, a speaker, one or more buttons or knobs, a microprocessor, and a touch screen." *Id.* at 31:4–7

The Specification discloses a "non-invasive blood constituent or analytes measurement device" that "may communicate with a smart phone, tablet, personal data assistant, computer, and/or other microprocessor-based device, which may in turn wirelessly . . . transmit some or all of the signal or processed data to the internet or cloud." *Id.* at 26:30–31, 26:37–42. Thus, the wearable measurement device can be a non-invasive blood analytes measurement device, the personal device can be a smart phone, tablet,

[5] *See* note 4, *supra*.

personal data assistant, computer, or microprocessor-based device, and the remote device can be "the cloud," which the Specification identifies as "data servers and processors in the web remotely connected." *Id.* at 26:32–33.

Accordingly, we construe the term "personal device" to include a computer or microprocessor-based device having a wireless receiver, a wireless transmitter, a display, a microphone, a speaker, one or more buttons or knobs, a microprocessor, and a touch screen.

E. Overview of the Prior Art

1. Lisogurski

Lisogurski discloses a "physiological monitoring system [that] monitor[s] one or more physiological parameters of a patient . . . using one or more physiological sensors." Ex. 1011 3:44–46. The physiological sensors may include a "pulse oximeter [that] non-invasively measures the oxygen saturation of a patient's blood." *Id.* at 3:62–64. The pulse oximeter includes "a light sensor that is placed at a sight on a patient, typically a fingertip, toe, forehead, or earlobe." *Id.* at 4:6–7. The light sensor "pass[es] light through blood perfused tissue and photoelectrically sense[s] the absorption of the light in the tissue." *Id.* at 4:8–10. The light sensor emits "one or more wavelengths [of light] that are attenuated by the blood in an amount representative of the blood constituent concentration," and may include red and infrared (IR) wavelengths of light. *Id.* at 4:42–48.

Figure 3 of Lisogurski is reproduced below.

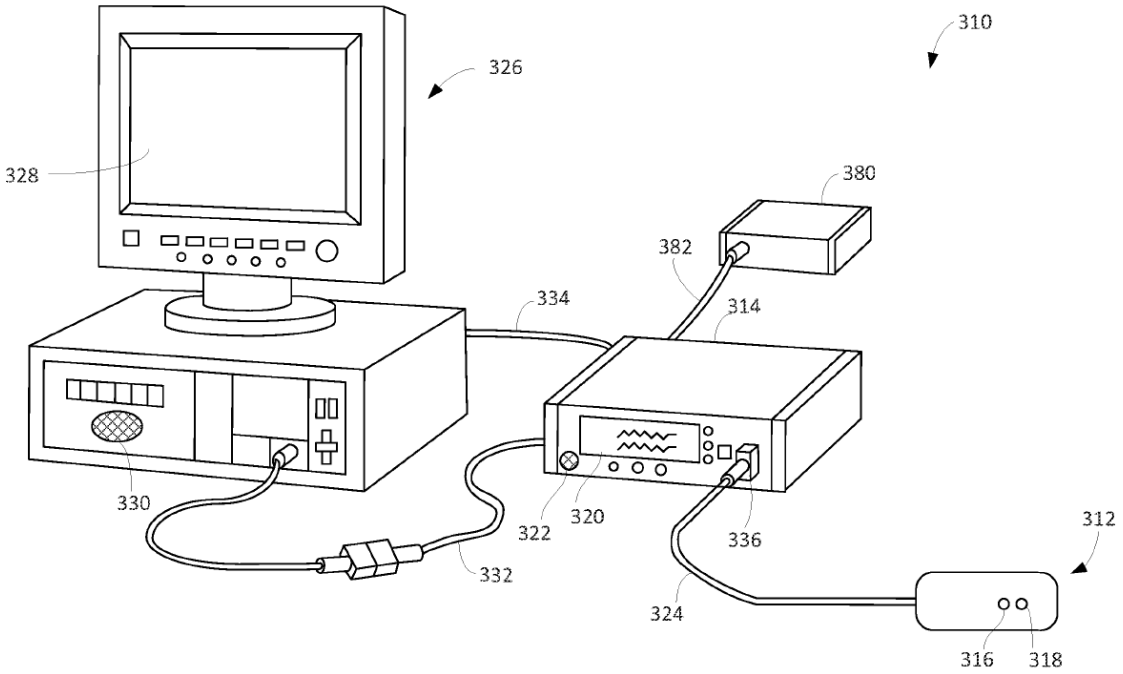

FIG. 3

Figure 3 of Lisogurski is "a perspective view of a physiological monitoring system." *Id.* at 2:23–25. The system includes sensor 312, monitor 314, and multi-parameter physiological monitor 326. *Id.* at 17:35–36, 18:44–45. Sensor 312 includes "one or more light sources 316 for emitting light at one or more wavelengths," and detector 318 for "detecting the light that is reflected by or has traveled through the subject's tissue." *Id.* at 17:37–42. Sensor 312 may have "[a]ny suitable configuration of light source 316 and detector 318," and "may include multiple light sources and detectors [that] may be spaced apart." *Id.* at 17:42–45. Light source 316 may include "LEDs of multiple wavelengths, for example a red LED and an IR [LED]." *Id.* at 19:25–27. Sensor 312 may be "wirelessly connected to monitor 314." *Id.* at 17:57–59.

Monitor 314 "calculate[s] physiological parameters based at least in part on data relating to light emission . . . received from one or more sensor units such as sensor unit 312." *Id.* at 17:59–62. Monitor 314 includes "display 320 . . . to display the physiological parameters," and "speaker 322 to provide an audible . . . alarm in the event a subject's physiological parameters are not within a predefined normal range." *Id.* at 18:3–10. Monitor 314 is "communicatively coupled to multi-parameter physiological monitor 326" ("MPPM 326") and "may communicate wirelessly" with MPPM 326. *Id.* at 18:58–61. Monitor 314 may also be "coupled to a network to enable the sharing of information with servers or other workstations." *Id.* at 18:62–65.

Multi-parameter physiological monitor 326 may also "calculate physiological parameters and . . . provide a display 328 for information from monitor 314." *Id.* at 18:49–52. MPPM 326 may also be "coupled to a network to enable the sharing of information with servers or other workstations." *Id.* at 18:62–65. The remote network servers may also "be used to determine physiological parameters," and may display the parameters on a remote display, display 320 of monitor 314, or display 328 of MPPM 326. *Id.* at 20:53–58. The remote servers may also "publish the data to a server or website," or otherwise "make them available to a user." *Id.* at 20:58–60.

Lisogurski discloses that the monitoring system shown in Figure 3, described above, "may include one or more components of physiological monitoring system 100 of FIG. 1." *Id.* at 17:32–35. Lisogurski further discloses that although "the components of physiological monitoring system 100 . . . are shown and described as separate components. . . . the

functionality of some of the components may be combined in a single component," and "the functionality of some of the components . . . may be divided over multiple components." *Id.* at 15:66–16:8. Figure 1 of Lisogurski is reproduced below.

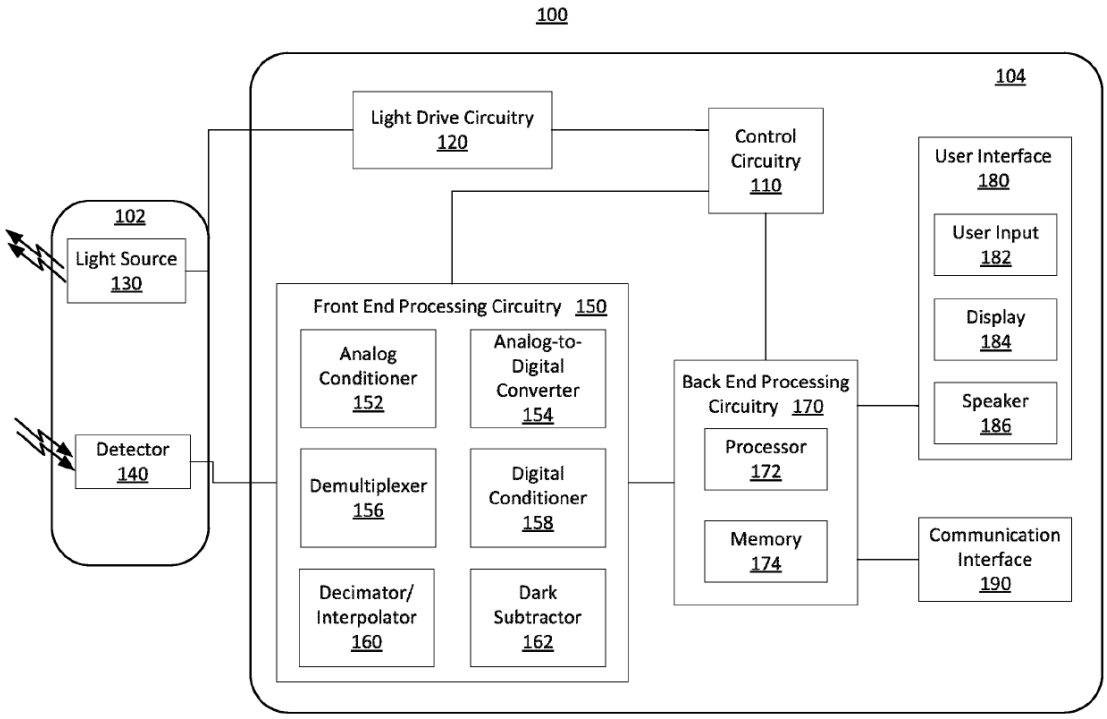

FIG. 1

Figure 1 of Lisogurski is a "block diagram of an illustrative physiological monitoring system." *Id.* at 2:11–13. The system includes "sensor 102 and monitor 104 for generating and processing physiological signals of a subject." *Id.* at 10:44–46. Sensor 102 includes "light source 130 and detector 140." *Id.* at 10:48–49. Light source 130 includes "a Red light emitting source and an IR light emitting source," such as Red and IR emitting LEDs, with the IR LED emitting light with a "wavelength between about 800 nm and 1000 nm." *Id.* at 10:52–58. Detector 140 "detect[s] the intensity of light at the Red and IR wavelengths," converts them to an

electrical signal, and "send[s] the detection signal to monitor 104, where the detection signal may be processed and physiological parameters determined." *Id.* at 11:9–10, 11:20–23.

Monitor 104 includes user interface 180, communication interface 190, and control circuitry 110 for controlling (a) light drive circuitry 120, (b) front end processing circuitry 150, and (c) back end processing circuitry 170 via "timing control signals." *Id.*, 11:33–38, Fig. 1. Light drive circuitry 120 "generate[s] a light drive signal . . . used to turn on and off the light source 130, based on the timing control signals." *Id.* at 11:38–40. The light drive signal "control[s] the intensity of light source 130 and the timing of when the light source 130 is turned on and off." *Id.* at 11:50–54. Front end processing circuitry 150 "receive[s] a detection signal from detector 140 and provides one or more processed signals to back end processing circuitry 170." *Id.* at 12:42–45. Front end processing circuitry 150 also "synchronize[s] the operation of an analog-to-digital converter and a demultiplexer with the light drive signal based on the timing control signals." *Id.* at 11:43–46.

Back end processing circuitry 170 "use[s] the timing control signals to coordinate its operation with front end processing circuitry 150." *Id.* at 11:46–49. Backend processing circuitry 170 includes processor 172 and memory 174, and "receive[s] and process[es] physiological signals received from front end processing circuitry 150" in order to "determine one or more physiological parameters." *Id.* at 14:56–57, 14:60–64. Backend processing circuitry 170 is "communicatively coupled [to] user interface 180 and communication interface 190." *Id.* at 15:16–18. User interface 180 includes "user input 182, display 184, and speaker 186," and may include "a

keyboard, a mouse, a touch screen, buttons, switches, [and] a microphone." *Id.* at 15:19–22. Communication interface 190 allows "monitor 104 to exchange information with external devices," and includes transmitters and receivers to allow wireless communications. *Id.* at 15:43–44, 15:48–57.

Lisogurski teaches the physiological monitoring system may modulate the light drive signal to have a "period the same as or closely related to the period of [a] cardiac cycle." *Id.* at 25:49–51. Thus, "[t]he system may vary parameters related to the light drive signal including drive current or light brightness, duty cycle, firing rate, . . . [and] other suitable parameters." *Id.* at 25:52–55. Lisogurski further teaches "the system may alter the cardiac cycle modulation technique based on the level of noise, ambient light, [and] other suitable reasons." *Id.* at 9:46–48. Thus, "[t]he system may increase the brightness of the light sources in response to [any] noise to improve the signal-to-noise ratio." *Id.* at 9:50–52. The system may also "change from a modulated light output to a constant light output in response to noise, patient motion, or ambient light." *Id.* at 9:57–60.

2. Carlson

Carlson discloses an "optical pulsoximetry [device] used for non-invasive measurement of pulsation and oxygen saturation in arterial human or animal blood." Ex. 1009 ¶ 2. The device measures the light "absorption of reduced (Hb)—and oxidized (HbO_2) h[e]moglobin at two optical wavelengths, where the relative absorption coefficients differ significantly." *Id.* ¶ 3.

Figure 2 of Carlson is reproduced below.

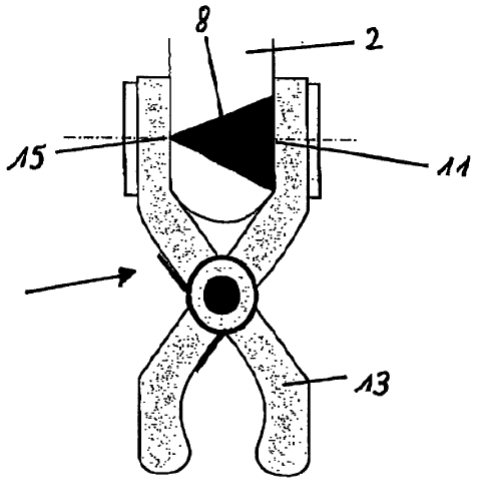

Figure 2

Figure 2 of Carlson is a schematic illustration of an ear clip sensor 1 of a pulsoximeter device. *Id.* ¶¶ 33, 49. Sensor 1 includes light source 15, which transmits light beam 8 through a patient's earlobe 2, and light detector 11 to detect the transmitted light. *Id.* ¶ 49. Light source 15 emits light at two wavelengths—660 nm and 890 nm—and can consist of two LEDs. *Id.* ¶ 50.

Carlson's pulsoximeter can be used to "survey the heath condition of a person or an animal [that] is mobile," and is "not restricted for use in, e.g., a hospital." *Id.* ¶ 72. Carlson teaches that "standard pulsoximeter sensors suffer from signal instability and insufficient robustness versus environmental disturbances." *Id.* ¶ 4. For example, when a sensor is worn by a person driving along a tree-lined avenue, the sensor will receive sunlight "at a certain frequency" such that "every time when passing a tree, sunlight is attenuated and between the trees sunlight is influencing the measurement of the pulsoximeter sensor." *Id.* ¶ 68. To address such problems, Carlson includes "optical and/or electronic means for increasing

Signal-to-Noise ratio (S/N) . . . of a pulsoximeter sensor for robust application of pulsoximetry in telemedicine- and near patient testing applications in rough (optical) environmental conditions." *Id.* ¶ 10. In particular, the LEDs in Carlson's sensor emit light "not as a current or continuous light but as pulsed light." *Id.* ¶ 69. Carlson's sensor also uses "AC-Coupling or Lock-In Amplification (synchronous detection) . . . to temporarily modulate the amplitude of the optical radiation of . . . the LED at a carrier frequency f_0 in order to shift the power spectrum of the pulsoximeter signals into a higher frequency range." *Id.* ¶ 20. Modulation frequency f_0 is selected to be "outside the frequency spectrum of sunlight and of ambient light." *Id.* ¶ 69. This allows the pulsoximeter signal to be easily discriminated from environmental signals, such as sunlight and ambient light, and "increas[es] significantly the Signal-to-Noise and Signal-to-Background ratio." *Id.*

Carlson further discloses that sensor 1 can be wirelessly connected to "a special unit worn by [a] person or patient," where "a signal is generated if [a] measured value is not within a predetermined range." *Id.* ¶¶ 77–78. The generated signal can be "transmitted to a respective person, to a medical doctor, to a hospital, etc." *Id.* ¶ 78. The pulsoximeter can also include a "GPS device which at any time gives the location of the person using the pulsoximetric sensor monitoring configuration." *Id.*

3. Mannheimer

Mannheimer discloses a pulse oximetry device that "non-invasively measure[s] blood oxygen saturation of arterial blood in vivo." Ex. 1008, 1:10–13. Mannheimer's device performs a "pulsed oximetry measurement [that] isolates arterial saturation levels for particular ranges of tissue layers .

. . by utilizing multiple spaced detectors and/or emitters." *Id.* at 2:1–6. Figure 1A of Mannheimer is reproduced below.

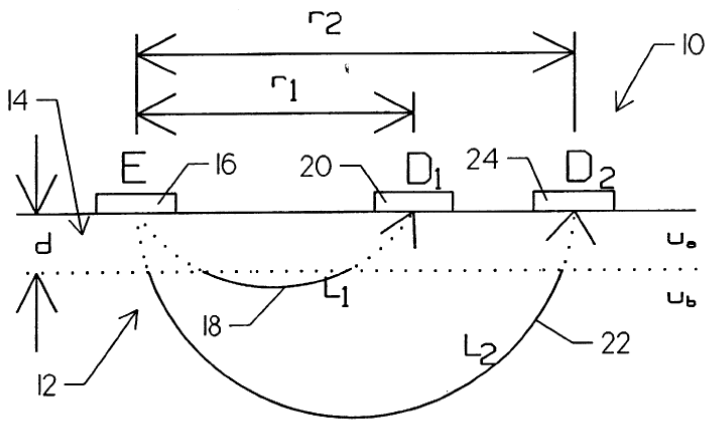

FIG. 1 A

Figure 1A of Mannheimer is a schematic diagram of a first embodiment of a pulse oximeter having one emitter 16 and two detectors 20/24. *Id.* at 2:40–42. Emitter 16 can be a single LED or multiple LEDs collocated to simulate a single point source. *Id.* at 3:13–18. Emitter 16 is separated from detector 20 by a first distance r_1, and is separated from detector 24 by a second distance r_2. *Id.* at 3:23–24. Light from emitter 16 is scattered by skin layer 14 and deeper skin layer 12, and reaches detectors 20/24 via respective paths 18/22. *Id.* at 3:18–20. Mannheimer calculates the blood oxygen concentration in skin layer 12 from the intensity of detected light at detectors 20/24 at two different times and two different wavelengths. *Id.* at 3:35–4:63.

In addition to the embodiment shown in Figure 1A, Mannheimer discloses a second embodiment of a pulse oximeter in Figure 1B, reproduced below.

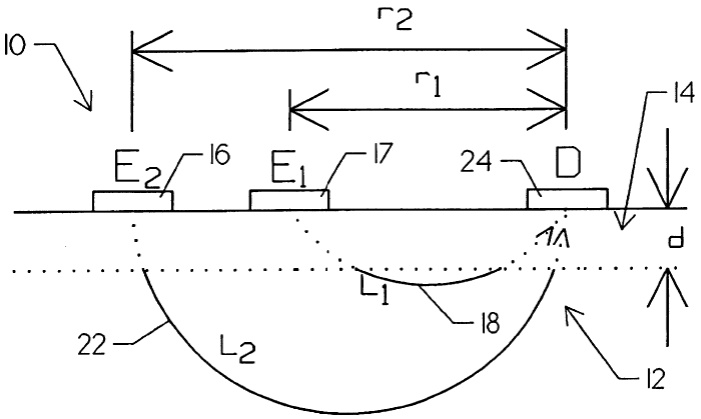

FIG. 1 B

Figure 1B of of Mannheimer is a schematic diagram of a second embodiment of a pulse oximeter having two emitters 16/17 and one detector 24. *Id.* at 2:43–44, 3:37–39. As shown in Figure 1B, emitter 17 is separated from detector 24 by a first distance r_1, and emitter 16 is separated from detector 24 by a second distance r_2. Mannheimer discloses that "[t]hose of skill in the art will appreciate that the operation" of the second embodiment shown in Figure 1B "is similar to that described above" in reference to the first embodiment shown in Figure 1A. *Id.* at 5:58–62.

F. Patentability of claims 5, 7–10, 13, and 15–17 over Lisogurski and Carlson

Petitioner argues claims 5, 7–10, 13, and 15–17 are unpatentable as obvious over the combination of Lisogurski and Carlson. *See* Pet. 21–63. At this stage of the proceeding, for the reasons stated below, we find Petitioner has demonstrated a reasonable likelihood of showing the unpatentability of these claims over Lisogurski and Carlson.

1. Petitioner's proposed combination

Petitioner proposes combining Lisogurski's physiological monitoring

system shown in Figures 1 and 3, in which sensor 102/312 wirelessly communicates with monitor 104/314, with Carlson's teachings regarding selecting an LED pulse frequency to increase signal-to-noise in a wireless pulse oximeter sensor. *See* Pet. 24–26, 32–34, 38–39, 41–44, 47–51. Petitioner's proposed combination relocates some of the components of Lisogurski's monitor 104/314 to sensor 102/312, as illustrated in a series of Petitioner-modified versions of Figure 1 of Lisogurski, which we combine below into a single modified version of Figure 1. *See id*. at 33, 47, 50.

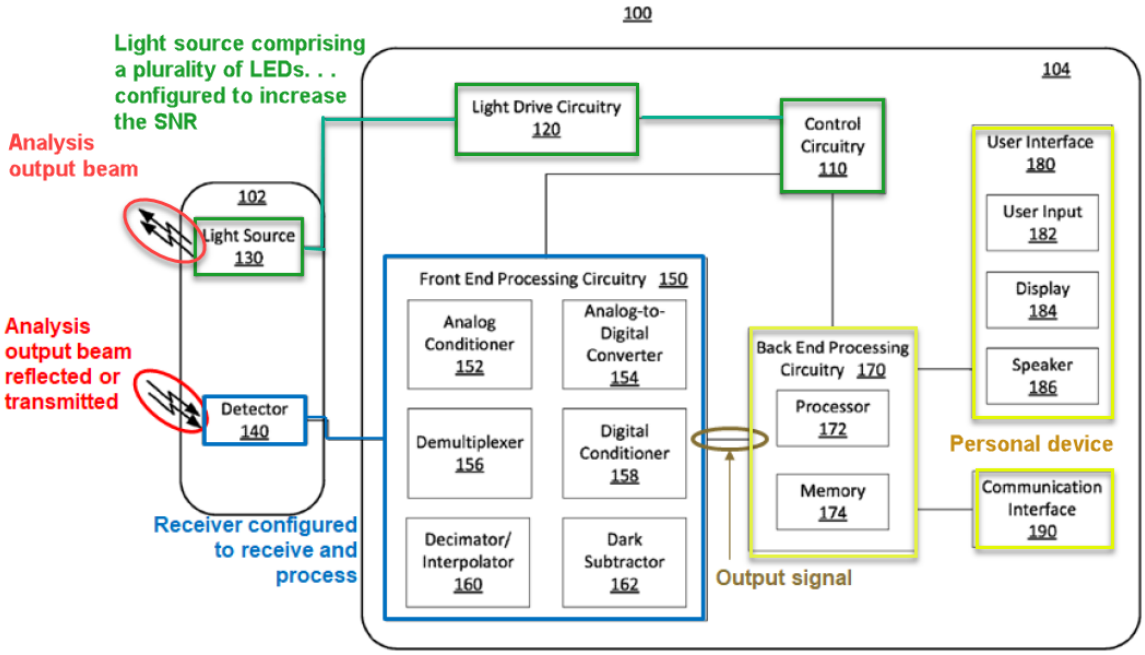

FIG. 1

Modified Figure 1 of Lisogurski demonstrates Petitioner's proposed combination, which relocates some components of monitor 104 (i.e., control circuitry 110, light drive circuitry 120, and front end processing circuitry 150) to sensor 102 as illustrated in the Petitioner-modified versions of Figure 1 provided in the Petition. *Id.*

Petitioner argues Lisogurski teaches or suggests these modifications

by teaching "[i]n some embodiments the functionality of some of the components may be combined in a single component . . . [or] the functionality of some of the components of monitor 104 . . . may be divided over multiple components." *Id.* at 33–34, 49 (quoting Ex. 1011, 16:2–9; citing Ex. 1003 ¶¶ 102, 145). Petitioner further argues that general industry trends suggest these modifications by teaching adding and integrating "features and capabilities of wearable devices to improve their operation in mobile monitoring systems or for sports and personal fitness applications." *Id.* at 34, 49 (citing Ex. 1003 ¶¶ 103, 146); *see also id*. at 26 (citing Ex. 1003 ¶¶ 48–56).

Petitioner identifies several industry trends that it argues teach or suggest its proposed modifications to Lisogurski's sensor 102/312 and monitor 104/314. The first was the "development of wireless monitoring technologies that could be worn by the patient and used to transmit data to a remote physician or care provider" in order to "respond to the challenge of providing medical care for patients in their homes or in locations where there was not easy access to a physician." *Id.* at 6–7 (citing Ex. 1003 ¶¶ 52–53; Ex. 1021, 2 ("[r]emote monitoring systems have the potential to mitigate problematic patient access issues"); Ex. 1024, 462 ("wireless technology promises benefits for medical monitoring applications by freeing patients from inconvenient and restrictive wires" allowing them to "remain in their homes while still under medical supervision"); Ex. 1027, 15 (disclosing growth in the remote patient monitoring market "exceeding expectations" and not being negatively impacted by the 2009 financial crisis).

The second industry trend was "bring[ing] heart rate sensing devices based on pulsoximetry to the consumer market for personal fitness tracking

and other uses." *Id.* at 7 (citing Ex. 1003 ¶¶ 49–50; Ex. 1005 ¶ 3 ("[t]here is a growing market demand for personal health . . . monitors"); Ex. 1009 ¶ 4 ("[p]ulsoximetry measuring devices are also used in sports for control and survey of athletes"); Ex. 1020, 3 ("[a] multitude of commercial health devices and sensors, such as oximeters and heart rate monitors, formerly reserved for professional use . . . can now be connected to smartphones"); Ex. 1027, 33, 35; Ex. 1029, 221).

The third industry trend was "tak[ing] advantage of the miniaturization of electronics and communication technology, which led to the development of smaller, wearable monitoring systems for mobile health and fitness applications." *Id.* (citing 1003 ¶¶ 51–52; Ex. 1021, 3 ("[r]ecent advances in sensor technology, microelectronics, telecommunication, and data analysis techniques have enabled the development of wearable systems for patients' remote monitoring"); Ex. 1022, 1).

The fourth industry trend was the medical industry's use of "apps and smartphones to not only deliver care to patients but to give individual access to health data for fitness or health issues." *Id.* at 7–8 (citing Ex. 1003 ¶¶ 51–52; Ex. 1021, 4 (transmitting "data gathered using sensor networks . . . to a remote site such as a hospital server" via "an information gateway such as a mobile phone or personal computer"); Ex. 1023, 5–6 (disclosing the biggest drivers for medical usage of tablets are "[p]atient monitoring and data collection," "[d]ashboard and [r]eports, "[a]ppointment scheduling," and "[p]rescriptions, authorizations, refills, patient-drug interaction and dosage management"); Ex. 1027 9, 10, 40–49). Petitioner argues these industry trends "provided a strong motivation to skilled persons to integrate medical optical sensing techniques into miniaturized wearable consumer devices that

communicate wirelessly with smart devices and remote services." *Id.* at 8 (citing Ex. 1003 ¶¶ 49–50).

Petitioner argues the teachings of Lisogurski and Carlson are combinable because both references "concern analogous miniaturized wireless puloximetry devices having the same applications (*e.g*., mobile monitoring of pulse and other physiological characteristics of a person)." *Id.* at 24 (citing Ex. 1003 ¶ 84). Specifically, Petitioner argues Lisogurski teaches a pulse oximetry system that includes a wearable sensor that "increas[es] the signal-to-noise of measured signals while minimizing power consumption." *Id.* at 25 (citing Ex. 1011, 4:15–20, 9:46–52, 17:51–58). Petitioner argues that Carlson teaches improving wearable pulse oximetry devices "by improving both signal measurement and energy consumption." *Id*. (citing Ex. 1009 ¶¶ 2, 10, 48, 52; Ex. 1003 ¶ 83). Therefore, Petitioner argues, a person skilled in the art would have had reason to combine the teachings of Lisogurski and Carlson "as part of the ordinary design process he or she follows to improve the operation of a device" because both references teach "techniques for achieving the same objectives." *Id.* at 24 (citing Ex. 1003 ¶¶ 81–84). Namely, Petitioner argues, "[b]oth references identify the same problem – ambient light – and the need to offset its negative impact on the signal-to-noise ratio." *Id.* at 38 (citing Ex. 1011, 9:46–60; Ex. 1009 ¶¶ 67–69; Ex. 1003 ¶¶ 118–121).

Patent Owner argues that Lisogurki's sensor 102/312 is not a wearable measurement device having a receiver configured to receive and process an analysis output beam because "processing circuitry 150 is part of the monitor 104, not part of the sensor 102 'placed' on a patient." Prelim. Resp. 28. Patent Owner argues that because Lisogurski teaches sensor 102/312 is

a medical device, a person skilled in the art would have had no reason "to add sensitive circuitry to the sensor of such a medical device used in a medical setting." *Id.* at 29–30. To the contrary, Patent Owner argues, a person skilled in the art "would have wanted the components of Lisogurski's system, especially the sensor unit, to be simple and inexpensive so they could be easily and inexpensively sanitized or disposed of between patients." *Id.* at 30. Patent Owner similarly argues that Lisogurski's monitor 104/314 is not a personal device because monitor 104/314, as modified by Petitioner, "is not disclosed in Lisogurski." *Id.* at 23. Patent Owner argues Petitioner's proposed modification of monitor 104/314 relies on hindsight "to artificially select components of a monitor 104 and assert they are a '*personal device*,' while deselecting other components . . . and asserting they are part of a 'wearable device.'" *Id.*

At this stage of the proceeding, we find Petitioner has demonstrated a reasonable likelihood of showing why a person of ordinary skill in the art would have modified Lisogurski's sensor 102/312 and monitor 104/314 in the manner proposed by Petitioner, and would have incorporated the teachings of Carlson. First, Lisogurski expressly suggests the modifications by teaching some components of monitor 104/314 can be divided among multiple components. *See* Ex. 1011, 16:7–9. Moreover, the industry trends identified by Petitioner, including wirelessly connecting wearable sensors to a network to remotely monitor patients, motivate the proposed combination. *See* Ex. 1005 ¶ 3; Ex. 1009 ¶ 4; Ex. 1020, 3; Ex. 1021, 2–4; Ex. 1022, 1; Ex. 1024, 462, Ex. 1027, 9, 10, 15, 33, 35, 40–49; Ex. 1029, 221; *see also KSR Int'l Co. v. Teleflex Inc.*, 550 U.S. 398, 418 (2007) ("When a work is available in one field of endeavor, design incentives and other market forces

can prompt variations of it. . . . If a person of ordinary skill can implement a predictable variation, § 103 likely bars its patentability.”).

Petitioner has also demonstrated a reasonable likelihood of showing why a person of ordinary skill in the art would have modified Lisogurski’s LED light source to increase pulse rate to improve the signal-to-noise ratio. Lisogurski and Carlson teach complementary methods of increasing signal-to-noise in the presence of noise. Specifically, Lisogurski teaches increasing LED intensity, and Carlson teaches pulsing the LEDs at a rate higher than the frequency spectrum of the noise. *See* Ex. 1011, 9:50–52 (“The system may increase the brightness of the light sources in response to the noise to improve the signal-to-noise ratio.”); Ex. 1009 ¶ 69 (“emit[ting] light by the LEDs not as current or continuous light but as pulsed light. The frequency is chosen in such a way that it is outside the frequency spectrum of sunlight and of ambient light. . . . increasing significantly the Signal-to-Noise.”). Significantly, Petitioner’s reasons for combining the teachings of Lisogurski and Carlson depend only on the teachings of Lisogurski and Carlson. They do not depend on any teachings from the ’533 patent, and, therefore, do not depend on hindsight. *See In re McLaughlin*, 443 F.2d 1392, 1395 (CCPA 1971).

2. Claims 5 and 13

Claim 13 recites a measurement system, and requires the system to include a wearable measurement device for measuring one or more physiological parameters. Ex. 1001 30:46–48. Petitioner argues that Lisogurski’s measurement system 100/310, including sensor 102/312 for measuring blood oxygen saturation, meets this limitation. *See* Pet. 28 (citing Ex. 1011, 4:6–20, 17:55–59). Patent Owner argues Lisogurski’s sensor

102/312, when modified as discussed in § II.F.1, *supra*, is not a wearable measurement device. *See* Prelim. Resp. 26–30. At this stage of the proceeding, for the reasons discussed above and notwithstanding Patent Owner's arguments to the contrary, we find Petitioner has sufficiently demonstrated that Lisogurski's sensor 102/312 is a wearable measurement device. Sensor 102/312 is a pulse oximeter that can be battery powered, wirelessly connected to monitor 104/314, and mounted on a user's fingertip, toe, earlobe, wrist, or thigh. Ex. 1011, 4:6–8, 4:15–20, 17:55–59.

Claim 13 further requires the wearable measurement device to include a light source that includes a plurality of semiconductor sources that are light emitting diodes configured to generate an output optical beam with one or more optical wavelengths, including a near-infrared wavelength between 700 and 2500 nanometers. Ex. 1001 30:48–55. Petitioner sufficiently demonstrates, at this stage of the proceeding, how Lisogurski's sensor 102/312 meets this limitation. *See* Pet. 29–30 (citing Ex. 1011, 4:42–45, 7:38–8:3, 10:48–52, 10:56–63, 17:37–45, 19:25–31, Figs. 1, 3; Ex. 1003 ¶¶ 92–94). Sensor 102/312 can contain multiple LEDs that emit and direct light toward a subject's tissue, including an LED that emits red light, and an LED that emits infrared light having a wavelength between 800 and 1000 nm. Ex. 1011, 10:48–52, 10:56–63.

Claim 13 further requires the light source to be configured to increase signal-to-noise by increasing a light intensity of at least one of the plurality of semiconductor sources. Ex. 1001 30:56–58. Petitioner sufficiently demonstrates, at this stage of the proceeding, how Lisogurski's LED-based

light source 130/316 meets this limitation.[6] *See* Pet. 30–31 (citing Ex. 1011, 1:19–21, 1:44–46, 1:67–2:3, 5:55–6:6, 9:46–52, 9:57–60, 10:48–49, 11:38–41, 11:50–54, 14:49–55, 35:5–9; Ex. 1003 ¶¶ 95–98). Lisogurski teaches "the intensity of light source 130 and the timing of when light source 130 is turned on and off" is controlled by a light drive signal that "increase[s] the brightness of the light sources in response to . . . noise to improve the signal-to-noise ratio." Ex. 1011, 9:50–52, 11:50–54.

Claim 13 further requires the light source to be configured to increase signal-to-noise by increasing a pulse rate of at least one of the plurality of semiconductor sources. Ex. 1001 30:58–60. Petitioner first argues that Lisogurski alone teaches this limitation by teaching (1) the LED firing rate can be modified by the light drive signal, (2) the LED firing rate is correlated to the detector sampling rate, (3) the detector sampling rate can be varied in the same way as the LED light output, and (4) the LED light output can be increased to increase signal-to-noise. *See* Pet. 35–36 (citing Ex.

---

[6] Petitioner argues that to the extent the claim requires the circuitry that controls and drives light source 130/316 must be in sensor 102/312, that configuration would have been obvious in view of the teachings in Lisogurski and the industry trends discussed in § II.F.1, *supra*. *See* Pet. 32–34 (citing Ex. 1011, 16:2–9, 17:32–35, 17:55–59, 18:16–31; Ex. 1003 ¶¶ 99–103). Although we do not construe the claims to require the light source to include the circuitry that allows it to be configured to increase signal-to-noise ratio, Petitioner has sufficiently demonstrated that it would have been obvious to move the light drive circuitry from monitor 104/314 to wireless sensor 102/312 for the reasons discussed in § II.F.1, *supra*.

1011, 2:1–2, 8:29–35, 9:46–52, 11:43–46, 11:52–55, 25:49–55, 33:47–49, 33:56–58, 35:7–9; 35:27–31, 37:6–22; Ex. 1003 ¶¶ 112–116).

Patent Owner argues that Lisogurski's light source is not configured to increase signal-to-noise by increasing LED firing rate for several reasons. *See* Prelim. Resp. 16–20. First, Patent Owner argues that adjusting Lisogurski's "'sampling rate' has nothing to do with adjusting the firing rate of the LEDs." *Id.* (citing Ex. 1011, 10:23–26, 34:10–12). Second, Patent Owner argues that Lisogurski teaches adjusting LED firing rate "to reduce power consumption, to synchronize with physiological impulses, to respond to an external trigger, or to change sampling rates," but not to improve signal-to-noise. *Id.* at 18–19 (quoting Ex. 1011 [57], 25:46–55, 35:24–31). Finally, Patent Owner argues that Lisogurski teaches away from increasing LED firing rate to increase signal-to-noise because it teaches "chang[ing] from a modulated output to a constant light output in response to noise, patient motion, or ambient light." *Id.* at 19 (quoting Ex. 1011, 9:57–60) (emphasis omitted).

At this stage of the proceeding, Petitioner has failed to sufficiently demonstrate how Lisogurski teaches increasing LED firing rate to increase signal-to-noise. The passages of Lisogurski identified by Petitioner teach generating a light drive signal that "varies with a period the same as or closely related to the period of the cardiac cycle" by varying parameters "related to the light drive signal including drive current or light brightness, duty cycle, firing rate . . . [and] other suitable parameters." Ex. 1011, 25:49–55. That is, the LED firing rate is varied to become or remain synchronous with a cardiac cycle, not to increase signal-to-noise. Although Lisogurski teaches "alter[ing] the cardiac cycle modulation technique based on the level

of noise [or] ambient light," Lisogurski teaches doing this by "increasing the brightness of the light sources" or by changing "from a modulated light output to a constant light output." *Id.* at 9:46–60.

Similarly, although Lisogurski teaches light output variations may also apply to sampling rate, this teaching in Lisogurski is provided in the context of modifying the sampling rate, light output, and other parameters to be synchronous with cardiac cycles:

> It will also be understood that sampling rate is one of the components that may be modulated in cardiac cycle modulation as described above. It will also be understood that the earlier described embodiments relating to varying light output may also apply to sampling rate.

Id. at 35:5–9. Throughout the specification, Lisogurski teaches varying light intensity to be synchronous with features of a cardiac cycle. *See id*. at 20:64–67 ("us[ing] a first light drive signal to identify systole periods of the cardiac cycle and modulat[ing] a second light drive signal to increase light intensity concurrent with the systole periods"); 22:14–17 ("us[ing] a first light drive signal to identify diastole . . . periods of the cardiac cycle and modulat[ing] a second light drive signal to increase light intensity concurrent with diastole period[s]"); 22:51–54 ("us[ing] a first light drive signal to identify a dicrotic notch . . . in the cardiac cycle and modulat[ing] a second light drive signal to increase light intensity concurrent with the dicrotic notch"). Thus, when Lisogurski teaches "varying light output may also apply to sampling rate," Lisogurski is teaching varying the sampling rate to be synchronous with the cardiac cycle, not to improve signal-to-noise. *Id.* at 35:5–9.

Petitioner next argues that to the extent Lisogurski does not teach increasing LED firing rates to increase signal-to-noise, it would have been obvious to modify Lisogurski to do so in view of the teachings of Carlson. *See id*. at 37–39. Specifically, Petitioner argues that Lisogurski "clearly identifies the importance of increasing signal-to-noise ratio" by increasing LED intensity to increase signal-to-noise. *Id.* at 37 (citing Ex. 1011, 9:50–52). Therefore, Petitioner argues, a person skilled in the art "would have been motivated to consider prior art teaching additional ways of improving signal-to-noise ratio in optical sensors based on LEDs." *Id.* (citing Ex. 1003 ¶¶ 83–85, 120–121). Petitioner argues Carlson teaches such a method, and improves a pulse oximeter's signal-to-noise by pulsing the oximeter's LEDs at a frequency that is "outside the frequency spectrum of sunlight and of ambient light" in order to "reduce[] the effects of ambient light including sunlight." *Id.* at 37–38 (citing Ex. 1009 ¶¶ 67–69; Ex. 1003 ¶¶ 118–119).

Petitioner argues that it would have been obvious to modify Lisogurski based on the teachings of Carlson because both references recognize the problem of ambient light noise "and the need to offset its negative impact on the signal-to-noise ratio." *Id.* at 38 (citing Ex. 1009 ¶¶ 67–69; Ex. 1011 9:46–60; Ex. 1003 ¶¶ 118–121). Petitioner further argues that it would be straightforward to modify Lisogurski to incorporate the teachings of Carlson because Lisogurski already teaches (a) modifying the LED firing rate in response to changing conditions, and (b) modifying the light drive signal in response to changes in ambient light and other sources of noise. *Id.* (citing Ex. 1011, 1:67–2:3, 5:55–61, 9:46–60, 37:6–18; Ex. 1003 ¶¶ 120–122).

Patent Owner argues Lisogurski teaches away from the combination by teaching "[i]n some embodiments, the system may change from a modulated output to a constant light output in response to noise, patient motion, or ambient light." Prelim. Resp. 19 (quoting Ex. 1011, 9:57–60) (emphasis omitted). Patent Owner argues that because this passage teaches "decreasing the pulse rate from a modulated light output to a constant light output," a person of ordinary skill in the art "would not be inclined to modify Lisogurski 'to increase signal-to-noise . . . by increasing a pulse rate." *Id.* (emphasis omitted).

At this stage of the proceeding, notwithstanding Patent Owner's argument to the contrary, we find Petitioner has sufficiently demonstrated reasoning with rational underpinning to combine the teachings of Lisogurski and Carlson. Lisogurski does not teach away from the combination because Lisogurski does not criticize, discredit, or otherwise discourage improving signal-to-noise by increasing the LED firing rate. *See In re Fulton*, 391 F.3d 1195, 1201 (Fed. Cir. 2004). Rather, Lisogurski teaches alternative ways of improving signal-to-noise by increasing the total amount of light delivered to a sample, including by (a) discontinuing cardiac cycle modulation, (b) increasing emitter intensity during cardiac cycle modulation, or (c) increasing the duty cycle or "on" periods of cardiac cycle modulation. *See* Ex. 1011, 9:46–60, 37:6–20. "The prior art's mere disclosure of more than one alternative does not constitute a teaching away from . . . alternatives because such disclosure does not criticize, discredit, or otherwise discourage the solution claimed." *Fulton* 391 F.3d at 1201.

Patent Owner next argues that Carlson does not teach increasing LED firing rate in response to increased noise, but instead teaches "choos[ing] a

particular fixed pulsed frequency to avoid ambient light and sunlight." Prelim. Resp. 20. Specifically, Patent Owner argues that Carlson "does not disclose 'increasing a pulse rate' of at least one of the semiconductor sources while in use, but instead merely teaches choosing, while designing a product, a particular frequency to avoid certain types of light." *Id.* at 21 (citing Ex. 1005 ¶ 69).

At this stage of the proceeding, notwithstanding Patent Owner's argument to the contrary, we find Petitioner has sufficiently demonstrated reasoning with rational underpinning to combine the teachings of Lisogurski and Carlson. Carlson teaches that "standard pulsoximeter sensors suffer from signal instability and insufficient robustness versus environmental disturbances," and provides, as an example, disturbances caused when a person wearing a sensor experiences alternating cycles of sunshine and shade "at a certain frequency" while walking or driving along a tree-lined avenue. Ex. 1009 ¶¶ 4, 68. Carlson teaches removing such disturbances by pulsing the sensor LEDs at a frequency that is "outside the frequency spectrum of sunlight[7] and of ambient light" in order to "increas[e] significantly the Signal-to-Noise." *Id.* ¶ 69. Carlson does not teach pulsing the LEDs at any particular frequency, but instead teaches pulsing at some

[7] Carlson identifies the "frequency spectrum" of sunlight as 0 Hz. *See* Ex. 1005, Fig. 7b. We understand this passage of Carlson to be referring to the frequency of alternating periods of sunshine and shade, rather than to the actual frequency spectrum of sunlight, which is quite broad. The frequency spectrum of alternating periods of sunshine and shade would be 0 Hz when a person is standing in continual sunshine or continual shade, but would increase when travelling down a tree-lined street based on the spacing between trees and the speed of travel. *Id.* ¶ 68.

frequency f_0 and "using AC-Coupling or Lock-In Amplification . . . to temporarily modulate the optical radiation of the LED at the carrier frequency f_0 in order to shift the power spectrum of the pulsoximeter signals into a higher frequency range where environmental optical radiation is unlikely." *Id.* ¶¶ 65, 69. Although Carlson gives a particular example of pulsing the LEDs at 1000 Hz, that example pertains to sampling pulsed LED light that has been transmitted through or reflected from a sample in the presence of 0 to 120 Hz noise. *Id.* ¶ 69. Carlson more generally teaches "shift[ing] the power spectrum of the pulsoximeter signals into a higher frequency range where environmental optical radiation is unlikely." *Id.* ¶ 65.

Moreover, even accepting as true Patent Owner's argument that Carlson teaches selecting a single (e.g., 1000 Hz) LED pulse rate when designing the pulsoximeter, Patent Owner's argument fails to consider the combined teachings of Carlson and Lisogurski. *See In re Merck & Co., Inc.*, 800 F.2d 1091, 1097 (Fed. Cir. 1986) ("Non-obviousness cannot be established by attacking references individually where the rejection is based upon the teachings of a combination of references."); *see also In re Keller 642 F.2d 413, 425* (Fed. Cir. 1981) (the test for obviousness is "what the combined teachings of the references would have suggested to those of ordinary skill in the art").

Lisogurski teaches varying a pulsoximeter's light drive signal, including an LED firing rate, based on a received external trigger. Ex. 1011 1:60–2:3. Lisogurski also teaches "detect[ing] a change in background noise [or] ambient light." *Id.* at 37:8–9. Lisogurski further teaches using servo algorithms to "adjust the light drive signals due to, for example, ambient

light changes." *Id.* at 5:55–59. Carlson teaches increasing a pulsoximeter's signal-to-noise in the presence of ambient light by choosing the LED firing rate or pulse frequency to be "outside the frequency spectrum of sunlight and of ambient light." Ex. 1009 ¶ 69. Together, the references teach that a pulsoximeter can detect a change in background noise and modify the LED firing rate based on the detected change (as taught by Lisogurski), and can modify the frequency of the LED firing rate to be greater than the frequency of the background noise (as taught by Carlson). *See* e.g., Ex. 1011, 37:6–9, 1:67–2:3; Ex. 1009 ¶¶ 65, 69. For these reasons, at this stage of the proceeding, Petitioner has sufficiently demonstrated that "a skilled person would have found it obvious to configure Lisogurski to increase the firing rate (frequency) of LEDs as taught by Carlson." Pet. 39.

Claim 13 further requires the wearable measurement device to include a plurality of lenses configured to receive a portion of the output optical beam and to deliver an analysis output beam to a sample. Ex. 1001 30:60–63. Petitioner argues that a person of ordinary skill in the art would have known that LEDs are either (i) not covered by an encapsulant, (ii) covered by an optically inert encapsulant, or (iii) covered by a lensing encapsulant. Pet. 39–40 (citing Ex. 1003 ¶¶ 124–125; Ex. 1035, 97–98, 191–199, 266–267). Petitioner argues a person skilled in the art would have selected the LEDs in Lisogurski's light source to have lensing encapsulants because "this was a common configuration with known benefits." *Id.* at 40–41 (citing Ex. 1019, 765; Ex. 1003 ¶¶ 124–129). For example, Petitioner argues Carlson teaches the benefits of using lenses to focus LED light onto a sample. *Id.* at 41–42 (citing Ex. 1009 ¶¶ 13, 14, 24, 62, Fig. 4; Ex. 1003 ¶¶ 130–133). Figure 4 of Carlson is reproduced below.

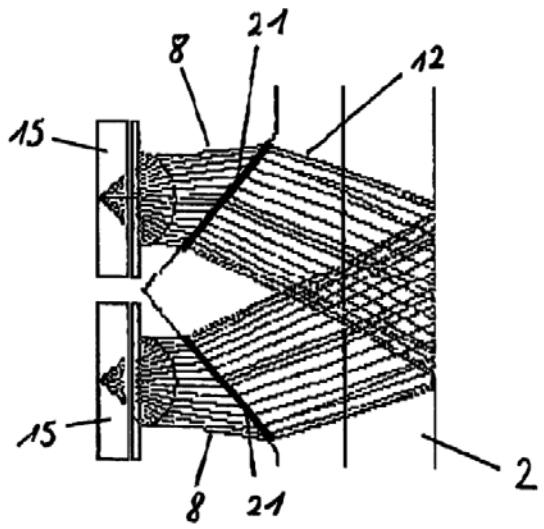

Figure 4

Figure 4 of Carlson is a schematic illustration of "two light emitting sources for an oximetric sensor, including beam shaping optics." Ex. 1009 ¶ 35. Petitioner argues Figure 4 of Carlson shows "two lenses 21 that receive light beams 8 emitted by LEDs 15 . . . and deliver light bundles or beams 12 to sample 2." Pet. 42 (citing Ex. 1009 ¶¶ 54, 62). Petitioner argues a person skilled in the art would have selected Lisogurski's LEDs to have lensing encapsulents because Lisogurski teaches reducing power consumption while maintaining signal-to-noise, and Carlson teaches using lenses to "increase the optical signal power without increasing the actual power used by the system." *Id.* at 43 (citing Ex. 1009 ¶¶ 10, 14). For these reasons, at this stage of the proceeding, Petitioner has sufficiently demonstrated that a person skilled in the art would have selected Lisogurski's LEDs to have encapsulated lenses.

Claim 13 further requires the wearable measurement device to include a receiver configured to receive and process at least a portion of the analysis output beam reflected or transmitted from the sample and to generate an

output signal, and further configured to be synchronized to pulses of the light source. Ex. 1001 30:64–31:3. Petitioner identifies Lisogurski's detector 140/318 and front end processing circuitry 150 in monitor 104 as the receiver. *See* Pet. 45 ("The detector described in Lisogurski is connected to front end processing circuitry (together a '*receiver configured to receive and process*')"). Petitioner provides a modified version of Figure 1 of Lisogurski, reproduced below, to illustrate the components of such a receiver.

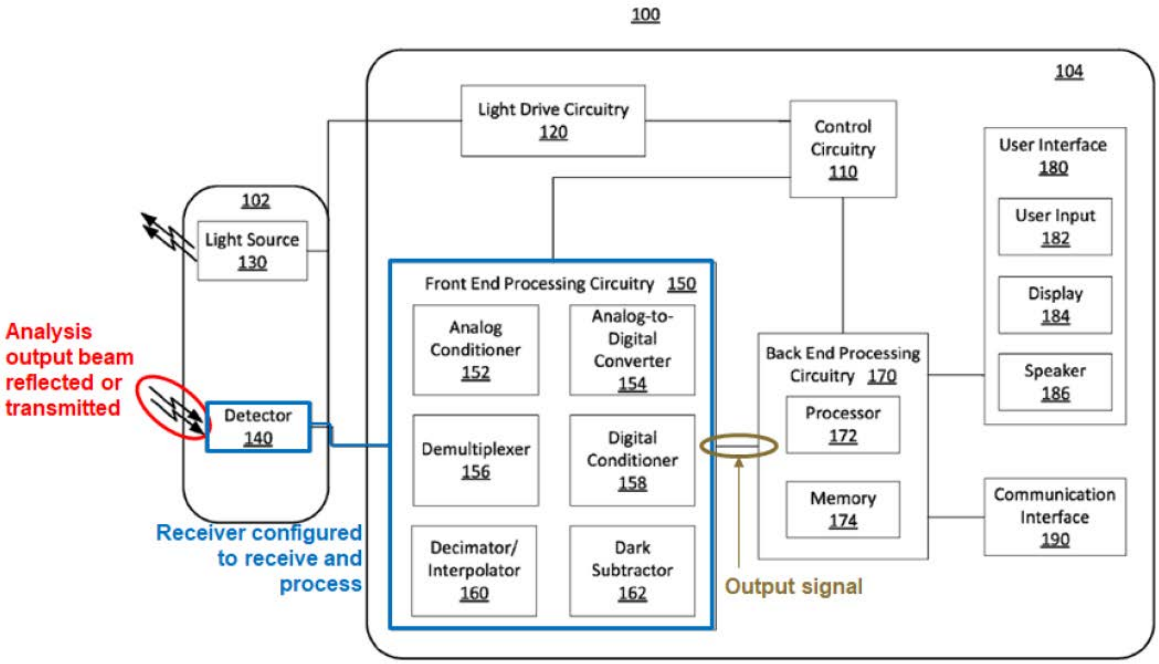

FIG. 1

Modified Figure 1 of Lisogurski is a Petitioner-modified version of Figure 1 of Lisogurski showing Petitioner's proposed modification of sensor 102 to include front end processing circuitry 150 from monitor 104.

Petitioner argues Lisogurski's detector 140/318 and front end processing circuitry 150 is a receiver configured to receive at least a portion of the analysis output beam because detector 140/318 "receives 'the light

that is reflected by or has traveled through the subject's tissue.'" *Id.* at 44 (quoting Ex. 1011, 17:40–42; citing Ex. 1011, 11:9–10, Figs. 1, 3). Petitioner argues detector 140/318 and front end processing circuitry 150 process at least a portion of the analysis output beam to generate an output signal because detector 140/318 "convert[s] the intensity of the received light into an electrical signal," and sends it to front end processing circuitry 150, which "receive[s] a detection signal from detector 140 and provide[s] one or more processed signals to back end processing circuitry 170." *Id.* at 44–45 (quoting Ex. 1011, 11:14–17, 12:42–45; citing Ex. 1011, 11:20–27). Petitioner argues detector 140/318 and front end processing circuitry 150 are synchronized to pulses of the light source because "front end processing circuitry may use the timing control signals to operate synchronously with light drive circuitry 120," which drives Lisogurski's LED-based light source. *Id.* at 45 (quoting Ex. 1011, 11:41–46; citing Ex. 1003 ¶ 139).

Petitioner argues a person skilled in the art would have modified Lisogurski's sensor 102/312 to include front end processing circuitry 150 for the reasons discussed in § II.F.1, *supra*. Namely, that in Lisogurski's wireless embodiment of sensor 102/312, a person skilled in the art "would have found it obvious to include the front end processing circuitry, which performs analog-to-digital conversion and other initial processing of the signal, in the sensor where the signal is captured," to allow the sensor to "process the detected signal and wirelessly transmit it to the monitor." *Id.* at 48 (citing Ex. 1003 ¶ 144). Next, Petitioner argues Lisogurski suggests the modification by teaching that "[in] some embodiments the functionality of some of the components may be combined in a single component . . . [or] the functionality of some of the components of monitor 104 . . . may be

divided over multiple components." *Id.* at 49 (quoting Ex. 1011, 16:2–9; citing Ex. 1003 ¶ 145). Lastly, Petitioner argues the modification would have been obvious in view of industry trends at the time, including the industry trends discussed in § II.F.1, *supra*. *Id.* (citing Ex. 1003 ¶ 146).

Patent Owner argues Lisogurski's sensor 102/312 is not a wearable measurement device having the claimed receiver because "processing circuitry 150 is part of the monitor 104, not party of the sensor 102 'placed' on a patient." Prelim. Resp. 28. Patent Owner further argues a person skilled in the art would not have included processing circuitry 150 in sensor 102/312 because Lisogurski describes a medical device, and "[t]here would have been no rationale or reason for an ordinary practitioner to add sensitive circuitry to the sensor of such a medical device used in a medical setting." *Id.* at 29–30. We are not persuaded by Patent Owner's arguments for the reasons discussed in § II.F.1, *supra*. Namely, Lisogurski expressly suggests the modifications, as do the industry trends identified by Petitioner such as wirelessly connecting wearable sensors to a network to remotely monitor patients. *See* Ex. 1005 ¶ 3; Ex. 1009 ¶ 4; Ex. 1020, 3; Ex. 1021, 2–4; Ex. 1022, 1; Ex. 1024, 462, Ex. 1027, 9, 10, 15, 33, 35, 40–49; Ex. 1029, 221; *see also KSR*, 550 U.S. at 418.

Claim 13 further requires a personal device that includes a wireless receiver and transmitter, a display, a microphone, a speaker, one or more buttons or knobs, a microprocessor and a touch screen. Ex. 1001 31:3–7. Petitioner identifies backend processing circuitry 170, user interface 180, and communication interface 190 of Lisogurski's monitor 104/314 as the personal device. *See* Pet. 49–53. Petitioner argues backend processing circuitry 170 includes microprocessor 172, user interface 180 includes a

display, a microphone, a speaker, buttons, and a touch screen, and communication interface 190 includes wireless receivers and transmitters for wireless communications. *Id.* at 51 (citing Ex. 1011, 15:19–23, 15:49–56, Fig. 1).

Claim 13 further requires the personal device to be configured to receive and process at least a portion of the output signal, to store and display the processed output signal, and to transmit at least a portion of the processed output signal over a wireless transmission link. Ex. 1001 31:7–12. Petitioner argues processor 172 receives the output signal from front end processing circuitry 150, and processes that signal to "determine one or more physiological parameters based on the received physiological signals." *Id.* at 50–51 (citing Ex. 1011, 14:60–64). Petitioner argues back end processing circuitry 170 displays the calculated physiological parameters, such as "a subject's blood oxygen saturation . . . [and] pulse rate information" on a display. *Id.* at 51 (citing Ex. 1011, 14:62–64, 15:30–35).

As discussed in § II.F.1, *supra*, Patent Owner argues that Lisogurski's monitor 104/314 is not a personal device because the monitor 104/314 as modified by Petitioner "is not disclosed in Lisogurski." Prelim. Resp. 23. Patent Owner argues Petitioner's proposed modifications of monitor 104/314 relies on hindsight "to artificially select components of a monitor 104 and assert they are a '*personal device*,' while deselecting other components . . . and asserting they are part of a 'wearable device.'" *Id.* At this stage of the proceeding, we are not persuaded by Patent Owner's arguments for the reasons discussed in § II.F.1, *supra*. Namely, Lisogurski expressly suggests the modifications to monitor 104/314 by teaching some components of monitor 104/314 can be divided among multiple components,

as do the industry trends identified by Petitioner. *See* Ex. 1011, 16:7–9; Ex. 1005 ¶ 3; Ex. 1009 ¶ 4; Ex. 1020, 3; Ex. 1021, 2–4; Ex. 1022, 1; Ex. 1024, 462, Ex. 1027, 9, 10, 15, 33, 35, 40–49; Ex. 1029, 221; *see also KSR* 550 U.S. at 418.

Claim 13 further requires a remote device configured to receive over the wireless transmission link an output status including at least a portion of the processed output signal, to process the received output status to generate and store processed data, and to store a history of at least a portion of the received output status over a specified period of time. Ex. 1001 31:13–20.

Petitioner sufficiently demonstrates, at this stage of the proceeding, how Lisogurski's multi-parameter physiological monitor 326 or remote servers or workstations meet these limitations. *See* Pet. 53–55 (citing Ex. 1011, 15:43–48, 18:49–53, 18:58–62, 20:8–13, 26:51–60; Ex. 1003 ¶¶ 154–163). Lisogurski teaches monitor 104/314 can wirelessly "exchange information with [an] external device," such as "a network, a server or other workstation[]," and can "publish [its] data to a server or website." Ex. 1011, 15:43–48, 26:55–60. Multi-parameter physiological monitor 326 is an example of such a workstation, and can "calculate physiological parameters and . . . provide a display for information from monitor 314 and from other medical monitoring devices." *Id.* at 18:49–53, Fig. 3.

Monitor 104/314 can also "be coupled to a network or enable the sharing of information with servers or other workstations," and Lisogurski teaches that "processing equipment remote to [its] system may be used to determine physiological parameters." *Id.* at 18:62–65, 26:53–55. According to Dr. Anthony, "[a] person of ordinary skill would understand that these devices generate and store processed data in order to perform these

functions." Ex, 1003 ¶¶ 156–157. Lisogurski further teaches that its systems can store historical data and perform statistical analyses on that data. *Id.* at 20:8–13. According to Dr. Anthony, "[a] person of ordinary skill would . . . understand that the remote device (whether it is a server, website, another monitor, or another device with memory and processing capability) stores a history of the data and can perform an historical analysis." Ex. 1003 ¶ 163.

For the reasons discussed above, and notwithstanding Patent Owner's arguments to the contrary, at this stage of the proceeding Petitioner demonstrates a reasonable likelihood of showing claim 13 is unpatentable over the combination of Lisogurski and Carlson. Moreover, as discussed in § II.B, *supra*, claim 5, is substantially similar to but broader than claim 13 because it does not recite all of the limitations of claim 13. *Compare id.* at 29:43–30:10, *with id*. at 30:46–31:20. Petitioner, therefore, analyzes claim 5 using the same analysis applied to claim 13. *See* Pet. 55–57. Accordingly, at this stage of the proceeding, Petitioner has demonstrated a reasonable likelihood of showing claim 5 is unpatentable over the combination of Lisogurski and Carlson for the same reasons discussed above for claim 13.

3. Claims 7 and 15

Claim 15 depends from claim 13, and further requires the remote device to be configured to transmit at least a portion of the processed data to one or more other locations selected from the group consisting of the personal device, a doctor, a healthcare provider, a cloud-based server and one or more designated recipients, and to be capable of transmitting information related to a time and a position associated with the at least a portion of the processed data. Ex. 1001, 32:1–9. Claim 7 depends from

claim 5, and further adds the same limitations as claim 15. *Compare id*. at 30:15–23, *with id*. at 32:1–9.

Petitioner argues that Lisogurski's personal device or monitor 104/314 can wirelessly transmit physiological information to a central location, such as a server or workstation, which is "coupled to a network to enable the sharing of information with servers or other work stations (not shown)." *Id.* at 58–59 (citing Ex. 1011, 15:43–57, 18:11–15, 18:48–67, 20:53–60; Ex. 1003 ¶ 177). Petitioner further argues that Carlson teaches its sensor can transmit physiological data to "a special unit" worn by the user, which can generate and transmit an alarm "to a respective person, to a medical doctor, [or] to a hospital." *Id.* at 59 (citing Ex. 1009 ¶ 78; Ex. 1003 ¶ 176). Moreover, the "special unit" can include a GPS device that "at any time gives the location of the person using the pulsoximetric sensor." *Id.* (quoting Ex. 1009 ¶ 78) (emphases omitted). Petitioner argues a person skilled in the art would have found it obvious "to modify Lisogurski in the manner suggested by Carlson in order to use GPS data to track the location of a person wearing a sensor" in order to be able to "identify where the person was in case of emergency to allow any medical personnel at the central location to find the person to provide assistance." *Id.* (citing Ex. 1003 ¶ 178).

At this stage of the proceeding, Petitioner sufficiently demonstrates a reasonable likelihood of showing the combination of Lisogurski and Carlson teach all the limitations of claims 7 and 15. Lisogurski teaches monitor 104/314 "may be communicatively coupled to multi-parameter physiological monitor 326," which may itself be "coupled to a network to enable the sharing of information with servers or other workstations." Ex. 1011,

18:62–65. That is, Lisogurski teaches a remote device (a server or workstation) that transmits at least a portion of the processed data to a cloud-based server (a network server or workstation). Carlson teaches the server can be in a hospital's network or a doctor's network. Ex. 1009 ¶ 68. Carlson further teaches or suggests modifying Lisogurski's sensor 102/312 to include a GPS device to be able to communicate a monitored patient's location at any time to a monitoring hospital or doctor to enable them to provide medical assistance in the case of any emergency indicated by the physiological data transmitted to the hospital or doctor. *Id.*; *see also* Ex. 1003 ¶ 178.

4. Claims 8 and 16

Claim 16 depends from claim 13, and further requires the receiver to be located a first distance and to receive a first signal from a first one of the plurality of light emitting diodes, and to be located a different, second distance and to receive a second signal from a second one of the plurality of light emitting diodes. Ex. 1001, 32:10–15. Claim 8 depends from claim 5, and further adds the same limitations as claim 16. *Compare id*. at 30:24–30, *with id*. at 32:10–15.

Petitioner argues Lisogurski teaches using multiple light sources and detectors that "may be spaced apart" in "any suitable configuration." Pet. 60 (citing Ex. 1011, 17:39–45). Petitioner further argues because "[t]here are just two options for how two LEDs can be spaced in relation to a detector," i.e., located the same distance or different distances from the detector, a person skilled in the art "reading the indication in Lisogurski that the sensors can be spaced apart would have immediately envisioned both options." *Id.* at 61 (citing Ex. 1003 ¶ 181). Therefore, Petitioner argues, a person skilled

in the art would have understood Lisogurski to disclose spacing two LEDs at different distances from a detector as a matter of design choice, *id*. at 61 n.8, or because "a person of skill in the art, reading the reference, would 'at once envisage' the claimed arrangement or combination." *Id.* (quoting *Kennametal, Inc. v. Ingersoll Cutting Tool Co.*, 780 F.3d 1376, 1381 (Fed. Cir. 2015)). Petitioner further argues that Lisogurski teaches a detector that detects a first signal from a first LED and a second signal from a second LED by teaching receiving signals from a red LED during a red "on" period 202 and from an IR LED during an IR "on" period 204. *Id.* at 62 (citing Ex. 1011, 7:38–8:3, 12:29–33, Figs. 2A, 2B; Ex. 1003 ¶ 183).

At this stage of the proceeding, Petitioner sufficiently demonstrates a reasonable likelihood that the combination of Lisogurski and Carlson teach the limitations of claims 8 and 16. Lisogurski discloses "[s]ensor unit 312 may include one or more light source[s] 316" and "[o]ne or more detector[s] 318." Ex. 1011, 17:37–42. Light sources 316 can include "a high efficiency infrared (IR) LED" and one or more "lower efficiency red LEDs." *Id.* at 7:58–61. The red and IR LEDs can be flashed on and off, including during separate "Red light LED 'on' periods 202" and "IR light 'on' period[s] 204," during which the signals from the red and IR LEDs can be captured by a single detector 318. *Id.* at 12:23–33, Figs. 2A, 2B.

5. Claims 9 and 17

Claim 17 depends from claim 16, and further requires the receiver's output signal to be generated in part by comparing the first and second signals. Ex. 1001, 32:16–17. Claim 9 depends from claim 8, and further adds the same limitations as claim 17. *Compare id*. at 30:31–32, *with id*. at 32:16–17.

Petitioner demonstrates, at this stage of the proceeding, how Lisogurski teaches this limitation by detecting light from red and IR LEDs pulsed at different points in a timing cycle as discussed above, and teaching that by "*comparing the intensities of two wavelengths* at different points in the pulse cycle, it is possible to estimate the blood oxygen saturation of hemoglobin in arterial blood." Pet. 62–63 (quoting Ex.1011, 4:45-51) (emphasis in original). Petitioner further demonstrates that Lisogurski computes the blood oxygen saturation from the intensities of light detected from the red and IR LEDs "using the ratio-of-ratios calculation, which is the ratio of the measured IR signal to the measured red signal." *Id.* at 63 (citing Ex. 1011, 4:45–56; Ex. 1019, 769–770; Ex. 1003 ¶ 183).

6. Claim 10

Claim 10 depends from claim 5, and further requires the output signal to include one or more physiological parameters, and the remote device to be capable of storing a history of at least a portion of the one or more physiological parameters over a specified period of time. Ex. 1001, 30:33–57.

As discussed in § II.B, *supra*, independent claim 5 is broader than independent claim 13 because it does not require the measurement device to output one or more physiological parameters and does not require the remote device to be capable of storing a history of the one or more physiological parameters over a specified period of time. *Compare id.* at 29:43–30:10, *with id*. at 30:46–31:20. Claim 10 adds these limitations to claim 5. *Id.* at 30:33–37.

Petitioner, therefore, relies on its analysis of claim 13 to teach the limitations of claim 10. *See* Pet. 63; *see also id*. at 54–55. For the reasons

explained in § II.F.2, *supra*, at this stage of the proceeding, Petitioner sufficiently demonstrates a reasonable likelihood that the combination of Lisogurski and Carlson teach the limitations of claim10.

G. Patentability of claims 8, 9, 16, and 17 over Lisogurski, Carlson, and Mannheimer

Petitioner argues claims 8, 9, 16, and 17 are unpatentable as obvious over the combination of Lisogurski, Carlson, and Mannheimer. *See* Pet. 63–69. At this stage of the proceeding, for the reasons stated below, we find Petitioner has demonstrated a reasonable likelihood of showing the unpatentability of these claims over Lisogurski, Carlson, and Mannheimer.

1. Petitioner's proposed combination

Petitioner proposes combining Lisogurski's physiological monitoring system shown in Figures 1 and 3, in which sensor 102/312 wirelessly communicates with monitor 104/314, with Carlson's teachings regarding selecting an LED pulse frequency to increase signal-to-noise in a wireless pulse oximeter sensor as discussed in § II.F.1, *supra*. We agree that a person skilled in the art would have been motivated to combine these references for the reasons discussed there.

Petitioner further proposes combining Lisogurski and Carlson with the teachings of Mannheimer. *See* Pet. 64–66. Petitioner argues that, like Lisogurski and Carlson, Mannheimer is directed to a "pulse oximetery monitoring and measurement system" that "uses one or more LEDs to alternately emit red and infrared light." *Id.* at 64 (citing Ex. 1008, 6:17–36, 6:66–7:4. Figs. 2, 4). Petitioner argues that Mannheimer teaches using "two LEDs each spaced a different distance from a single detector" so that "reflected light from a surface layer of skin . . . can be removed so that light

reflected by deeper, more vascular tissue layers can be used to identify a pulsatile signal of interest." *Id.* (citing Ex. 1008, 3:25–35, 3:38–40, 5:1–5, 5:58–62. Fig. 1B).

Petitioner argues that because Lisogurski and Carlson both teach "optimiz[ing] power consumption and increase[ing] the signal-to-noise ratio," a person skilled in the art "would have looked to other references that disclosed additional techniques for improving the operation of optical sensing systems." *Id.* at 64–65 (citing Ex. 1003 ¶ 192). Petitioner argues one reason a person skilled in the art would have looked to the teachings of Mannheimer is that Lisogurski teaches "that light is attenuated differently depending on the tissue," and Mannheimer teaches "a solution to this problem, teaching that interference from skin can be removed by using signals detected from LEDs spaced different distances from a detector." *Id.* at 65 (citing Ex. 1011, 19:42–50; Ex. 1008, 3:25–35, 5:1–5; Ex. 1003 ¶ 193).

Petitioner argues another reason a person skilled in the art would have looked to the teachings of Mannheimer is that Lisogurski teaches "using multiple light sources and multiple detectors 'which may be spaced apart,'" but does not "identify the spacing that should be used." *Id.* at 65–66 (citing Ex. 1011, 17–45, Ex. 1003 ¶ 194). Therefore, Petitioner argues, a person skilled in the art "would have looked to other prior art for guidance on how to arrange LEDs with respect to a sensor, one example of which is described in Mannheimer," which teaches "how to position emitters at different distances relative to a detector." *Id.* (citing Ex. 1003 ¶ 194).

At this stage of the proceeding, we find Petitioner has sufficiently articulated reasoning with rational underpinning for combining the teachings of Mannheimer with the teachings of Lisogurski and Carlson.

2. Claims 8 and 16

Claim 16 depends from claim 13, and further requires the receiver to be located a first distance from and to receive a first signal from a first one of the plurality of light emitting diodes, and to be located a different, second distance from and to receive a second signal from a second one of the plurality of light emitting diodes. Ex. 1001, 32:10–15. Claim 8 depends from claim 5, and further adds the same limitations as claim 16. *Compare id*. at 30:24–30, *with id*. at 32:10–15.

Petitioner sufficiently demonstrates, at this stage of the proceeding, how Mannheimer teaches this limitation by disclosing a detector 24 receiving a first signal 18 from a first LED 17 located a first distance r_1 from detector 24, and receiving a second signal 22 from a second LED 16 located a second distances r_2 from detector 24. Pet. 66–67 (citing Ex. 1008, 3:18–24, 5:58–62. Fig. 1B; Ex. 1003 ¶ 198).

Accordingly, at this stage of the proceeding, Petitioner has demonstrated a reasonable likelihood of showing claims 8 and 16 are unpatentable over the combination of Lisogurski, Carlson, and Mannheimer.

3. Claims 9 and 17

Claim 17 depends from claim 16, and further requires the receiver's output signal to be generated in part by comparing the first and second signals. Ex. 1001, 32:16–17. Claim 9 depends from claim 8, and further adds the same limitations as claim 17. *Compare id*. at 30:31–32, *with id*. at 32:16–17.

Petitioner sufficiently demonstrates, at this stage of the proceeding, how Mannheimer teaches this limitation by disclosing "calculating an arterial oxygen saturation level" related only to "the arterial blood saturation

of . . . deeper tissue" by calculating "a ratio R from I_1 and I_2," where I_1 is a first intensity "corresponding to the [first] signal 18 detected from light emitted by [first LED] E_1" and I_2 is a second intensity "corresponding to the [second] signal 20 detected from light emitted by [second LED] E_2." Pet. 68–69 (citing Ex. 1008, 2:16–18, 3:35–5:9, 5:23–57; Ex. 1003 ¶¶ 202–204).

Accordingly, at this stage of the proceeding, Petitioner has demonstrated a reasonable likelihood of showing claims 9 and 17 are unpatentable over the combination of Lisogurski, Carlson, and Mannheimer.

H. Discretionary Denial

The Director has discretion to institute *inter partes* review, and has delegated that discretion to the Board. *See* 35 U.S.C. § 314(a); *see also* 37 C.F.R. §42.4(a). When considering whether to institute *inter partes* review under § 314(a), the Board's discretion is informed by 35 U.S.C. § 316(b), which requires consideration of the effect on the economy, the integrity of the patent system, the efficient administration of the Office, and the ability to timely complete proceedings. *See Trial Practice Guide Update*, 84 Fed. Reg. 33925, 23 (July 16, 2019).[8] Thus, the Board considers and weighs several factors in determining whether to exercise its discretion to deny institution, including whether a petitioner has filed two or more petitions against the same patent at or about the same time, and whether the petitioner has challenged the same patent in a related district court proceeding and the state of that proceeding. *See id. at 25 n.2, 26; see also NHK Spring Co., Ltd. v. Intri-Plex Techs., Inc.*, IPR2018-00752 (PTAB Sept. 12, 2018) (Paper 8) (precedential) ("*NHK*").

[8] Available at https://www.uspto.gov/TrialPracticeGuide3

Patent Owner argues we should deny institution under § 314(a) because the District Court in the related district court proceeding "will resolve [Petitioner's] validity arguments before any IPR trial concludes," and because "the Petition contains significant overlap with Petitioner's parallel petition in IPR2019-00913." Prelim. Resp. 4. We address each of these arguments below.

1. Related District Court Proceeding

Patent Owner filed a complaint alleging infringement of the '533 patent in the District Court for the Eastern District of Texas, and served Petitioner with the complaint on April 10, 2018. Ex. 1004, 2. The District Court issued a Scheduling Order on June 19, 2018, scheduling a dispositive motion deadline of July 9, 2019 and commencement of a jury trial on February 18, 2020. Ex. 2102, 1–2.

This Petition was filed on April 10, 2019, within the one-year time period permitted by statute. *See* 35 U.S.C. § 315(b). If the Petition is granted by the statutory deadline of October 22, 2019, a Final Written Decision will be due by October 22, 2020. *See id*. §§ 314(b), 316(a)(11). Patent Owner served Petitioner with an Amended Final Election of Asserted Claims on May 7, 2019, asserting infringement of claims 5, 9, 13, and 15–17. Ex. 2111, 1, 3. Petitioner served Patent Owner with a Final Election of Asserted Prior Art on May 22, 2019, alleging the asserted claims are invalid over, *inter alia*, Lisogurski + Carlson + Mannheimer. Ex. 2101, 2, 6.

Patent Owner argues we should exercise our discretion to deny the Petition because the Board "has found 'that the advanced state of [a]district court proceeding is an additional factor that weights in favor of denying the Petition under § 314(a),'" and "the facts here are similar to those in *NHK*."

Prelim. Resp. 4 (citing *NHK* at 20). Patent Owner argues Petitioner is challenging the validity of the ’533 patent as obvious over Lisogurski, Carlson, and Mannheimer both here and in the District Court, and the District Court will determine the validity of the ’533 patent using the same claim construction standard over the same prior art in February 2020, approximately eight months before we would issue a Final Written Decision in October 2020. *Id.* at 5–6 (citing *NHK* at 20).

Given these facts, we authorized Petitioner to file a Reply to Patent Owner’s Preliminary Response, and Patent Owner to file a Sur-Reply, both limited to discussing the facts and factors the Board should consider when deciding whether to exercise our discretion to deny institution under § 314(a). *See* Paper 12. Petitioner filed a Reply (Paper 13, “Pet. Reply”), and Patent Owner filed a Sur-Reply (Paper 15, “PO Sur-Reply”).

In its Reply, Petitioner argues that Patent Owner’s request to deny institution under § 314(a) “is now moot because there will not be a trial in the Eastern District of Texas in February 2020.” Pet. Reply 1. Petitioner informs us that “the Eastern District of Texas [has] granted [Petitioner’s] motion to transfer the district court case to the Northern District of California,” and that as a result, “all pending deadlines in the Texas action were suspended and the February 2020 trial date was vacated.” *Id.* (citing Ex. 1057). Petitioner also informs us that prior to transfer of the case to the Northern District of California, “Petitioner filed a dispositive motion for invalidity for lack of written description for all asserted claims in the ’533 patent,” and that “[t]he case was stayed before [Patent Owner] responded to this motion.” *Id.* at 6–7. Moreover, Petitioner informs us that it did not file any “dispositive motions involv[ing] invalidity based on prior art” in the

district court proceeding. *Id.* at 6. Petitioner also argues that because its "challenges in the district court action include . . . the prior art used in the grounds of the Petition," we should institute this proceeding on the merits because doing so "would simplify and narrow the dispute in district court." *Id.* at 4.

Patent Owner, in its Sur-Reply, does not dispute Petitioner's contention that the only dispositive motion Petitioner filed in the district court proceeding challenged the validity of the '533 patent on the grounds of lack of written description, and that Petitioner did not file any dispositive motions challenging validity on the grounds of obviousness over prior art. PO Sur-Reply 7. Patent Owner also does not dispute that the district court case has been transferred to the Northern District of California, and stayed pending that transfer. *Id.* at 1. However, Patent Owner argues that transfer was completed on October 2, 2019 and that "the stay was lifted upon completion of the transfer." *Id.* at 1 (citing Ex. 1057, 1; Ex. 2113, 33). Nonetheless, Patent Owner admits that although "[t]he parties have filed opening summary judgment briefs," the assigned Judge in the Northern District of California "has not yet set a schedule for the remaining briefs or a trial date." *Id.* at 2. Still, Patent Owner argues that because the assigned Judge scheduled trial 3.5 months "after the deadline for summary judgement response briefs" in a different patent case, "it is likely that trial will be completed in the second quarter of 2020 and certainly no later than June 2020." *Id.* at 2–3.

Upon consideration of the evidence and arguments presented, we are not persuaded that we should exercise our discretion to deny institution under § 314(a). The related district court proceeding has been transferred

from the Eastern District of Texas to the Northern District of California, mooting the February 2020 trial date in the Eastern District of Texas. Ex. 1057, 1. Petitioner has not filed any dispositive motions challenging the validity of the ’533 patent on any prior art grounds. Pet. Reply 6–7; PO Sur-Reply 7; Ex. 1057, 1–3. Therefore, the validity of the claims challenged in the Petition over the art raised in the Petition will not be determined in the related district court proceeding until a jury makes that determination after a trial on the merits in the Northern District of California.

To date, as Patent Owner admits, no scheduling order has issued for the Northern District of California proceeding, and no trial date has been set. PO Sur-Reply 2. Although Patent Owner asserts that the Northern District of California proceeding is *likely* to go to trial “in the second quarter of 2020 and certainly no later than June 2020,” Patent Owner’s assertion, given the facts described above, is speculation. We decline to engage in such speculation to determine whether to proceed with an *inter partes* review in this Proceeding.

Accordingly, for the reasons discussed above, we decline to exercise our discretion to deny institution under 35 U.S.C. § 314(a) due to the pending litigation in the Northern District of California.

2. Related Inter Partes Review Proceeding

In this Proceeding, Petitioner challenges claims 5, 7–10, 13, and 15–17 as unpatentable over Lisogurski and Carlson, and claims 8, 9, 16, and 17 as unpatentable over Lisogurski, Carlson, and Mannheimer. Pet. 3. In *Apple Inc. v. Omni MedSci Inc*., IPR2019-00913 (PTAB), Petitioner challenges

claims 5, 7–10, 13, and 15–17 as unpatentable over Valencell 093[9] and Valencell 099[10], with or without Carlson, and claims 8, 9, 16, and 17 as unpatentable over Valencell 093, Valencell 099, and Mannheimer, with or without Carlson. IPR2019-00913, Paper 1, 4.

Patent Owner argues we should exercise our discretion to deny institution of this Proceeding because "Petitioner filed parallel and substantially overlapping IPR petitions against the '533 patent but has not identified any material differences between them." Prelim. Resp. 6 (citing *Comcast Cable Comms. v. Rovi Guides, Inc.*, IPR2019-00232, slip op. at 12–13 (PTAB May 20, 2019) (Paper 14); *Trial Practice Guide Update* (July 15, 2019); 84 Fed. Reg. 33925). Patent Owner argues that in IPR2019-00913, Petitioner "challenge[s] the same claims as in this Petition, but merely replace[s] Lisogurski" with the combination of Valencell 093 and Valencell 099, without explaining "any material differences" between these references. *Id.* at 7–8. Patent Owner argues that by "present[ing] six different grounds challenging the same claims without identifying any material differences in the references, Petitioner seeks review of redundant arguments, contrary to the purpose of IPR and the directive to ensure efficient use of the Board's resources." *Id.* at 9 (citing 35 U.S.C. § 314(a)).

We are not persuaded by Patent Owner's arguments, and decline to deny institution of the Petition under 35 U.S.C. § 314(a) due to the related petition filed in IPR2019-00913. In doing so, we are mindful of the following facts: (a) this Petition was filed on April 10, 2019 (Paper 3, 1),

[9] U.S. Patent Publication No. 2012/0197093 A1.

[10] U.S. Patent Publication No. 2010/0217099 A1.

(b) the *Comcast* Decision issued on May 20, 2019, and (3) the latest Trial Practice Update was published on July 15, 2019. Thus, when the Petition was filed, Petitioner was not aware of the Board's guidance that, *subsequent* to the publication of the July 2019 Trial Practice Guide Update:

> If a petitioner files two or more petitions challenging the same patent, then the petitioner should, in its petitions or in a separate paper filed with the petitions, identify (1) a ranking of the petitions in the order it wishes the Board to consider the merits, if the Board uses its discretion to institute any of the petitions, and (2) a succinct explanation of the differences between the petitions, why the issues addressed by the differences are material, and why the Board should exercise its discretion to institute additional petitions if it identifies one petition that satisfies petitioner's burden under 35 U.S.C. § 314(a).

Trial Practice Guide Update (July 2019), 27; *see also id*. at 27 n.4 ("*After the publication of this guide*, it will be expected that petitioners will justify multiple petitions in the first instance in their petitions or in a separate paper with the petitions.") (emphasis added). For petitions filed prior to publication of the July 2019 Trial Practice Guide Update, the Board has discretion to authorize a petitioner to file a paper justifying the need to file two or more petitions. *Id.* at 27 n.4 ("Prior to the issuance of this guide, a panel requested from the petitioner . . . an additional paper . . . to address these issues. Panels *may* continue to authorize such papers for *petitions submitted before* the publication of this guide.") (emphases added).

Although not expressly stated in the July 2019 Trial Practice Guide Update, the guidance provided suggests that the reason a petitioner should rank its petitions and identify the differences between them is to facilitate the Board's consideration of "why the Board should exercise its discretion to institute additional petitions *if it identifies one petition that satisfies*

petitioner's burden under 35 U.S.C. § 314(a)." *Id.* at 27 (emphasis added); *see also Comcast*, slip op. at 8 (Paper 14) ("in light of the specific facts of this case, we exercise our discretion to deny institution of the present Petition under § 314(a) in light of IPR2019-00231, *which we are instituting*.") (emphasis added).

Here, in addition to not authorizing Petitioner to file a paper ranking and explaining the differences between this Petition and the petition filed in IPR2019-00913, we have denied the petition filed in IPR2019-00913 on the merits. *See Apple Inc. v. Omni MedSci, Inc.*, IPR2019-00913, Paper 14 at 24 (PTAB Oct. 16, 2019). Thus, only this Petition will proceed on the merits, and Patent Owner's burden will be limited to defending the patentability of the claims challenged on the grounds raised in this Petition. These facts alleviate the concerns, also expressed in the July 2019 Trial Practice Guide Update, of "plac[ing] a substantial and unnecessary burden on the Board and the patent owner" and of raising "fairness, timing, and efficiency concerns." Trial Practice Guide Update (July 15, 2019), 26.

Accordingly, for the reasons discussed above, we decline to exercise our discretion to deny this Petition under 35 U.S.C. § 314(a) due to Petitioner's filing of a concurrent petition challenging the same claims of the '533 patent on different grounds in IPR2019-00913.

III. CONCLUSION

We have reviewed the Petition and Preliminary Response, and have considered all of the evidence and arguments presented by Petitioner and Patent Owner. We find, on this record, Petitioner has demonstrated a reasonable likelihood of showing claims 5, 7–10, 13, and 15–17 of the '533

patent are unpatentable. Accordingly, we institute *inter partes* review of all claims on all grounds raised in the Petition.

The Board has not yet made a final determination with respect to any claim construction issue or the patentability of any challenged claim.

IV. ORDER

It is ORDERED that, pursuant to 35 U.S.C. § 314, an *inter partes* review is hereby instituted on all challenged claims on all grounds; and

FURTHER ORDERED that, pursuant to 35 U.S.C. § 314(c) and 37 C.F.R. § 42.4, notice is hereby given of the institution of a trial commencing on the entry date of this Decision.

For PETITIONER:

Jeffrey P. Kushan
Ching-Lee Fukuda
Thomas A. Broughan III
SIDLEY AUSTIN LLP
jkushan@sidley.com
clfukuda@sidley.com
tbroughan@sidley.com

For PATENT OWNER:

Thomas A. Lewry
John S. LeRoy
Robert C.J. Tuttle
John M. Halan
Christopher C. Smith
BROOKS KUSHMAN P.C.
tlewry@brookskushman.com
jleroy@brookskushman.com
rtuttle@brookskushman.com
jhalan@brookskushman.com
csmith@brookskushman.com
OMSC0110IPR1@brookskushman.com