US007764982B2

(12) **United States Patent**
Dalke et al.

(10) **Patent No.: US 7,764,982 B2**
(45) **Date of Patent: Jul. 27, 2010**

(54) **MULTIPLE WAVELENGTH SENSOR EMITTERS**

(75) Inventors: **David Dalke**, Irvine, CA (US); **Ammar Al-Ali**, Tustin, CA (US); **Mohamed Diab**, Mission Viejo, CA (US); **Marcelo Lamego**, Rancho Santa Margarita, CA (US); **Robert Smith**, Lake Forest, CA (US)

(73) Assignee: **Masimo Laboratories, Inc.**, Irvine, CA (US)

(*) Notice: Subject to any disclaimer, the term of this patent is extended or adjusted under 35 U.S.C. 154(b) by 479 days.

(21) Appl. No.: **11/367,013**

(22) Filed: **Mar. 1, 2006**

(65) **Prior Publication Data**

US 2006/0211924 A1 Sep. 21, 2006

Related U.S. Application Data

(60) Provisional application No. 60/657,596, filed on Mar. 1, 2005, provisional application No. 60/657,281, filed on Mar. 1, 2005, provisional application No. 60/657,268, filed on Mar. 1, 2005, provisional application No. 60/657,759, filed on Mar. 1, 2005.

(51) **Int. Cl.**
A61B 5/1455 (2006.01)

(52) **U.S. Cl.** **600/310**; 600/322

(58) **Field of Classification Search** 600/310, 600/316; 356/39, 40, 41, 42, 451
See application file for complete search history.

(56) **References Cited**

U.S. PATENT DOCUMENTS

3,910,701	A *	10/1975	Henderson et al.	356/39
3,998,550	A	12/1976	Konishi et al.	
4,157,708	A	6/1979	Imura	
4,167,331	A	9/1979	Nielsen	
4,266,554	A	5/1981	Hamaguri	
4,446,871	A	5/1984	Imura	
4,586,513	A	5/1986	Hamaguri	
4,621,643	A	11/1986	New et al.	
4,653,498	A	3/1987	New et al.	
4,685,464	A	8/1987	Goldberger	
4,694,833	A	9/1987	Hamaguri	

(Continued)

FOREIGN PATENT DOCUMENTS

WO WO 98/43071 10/1998

(Continued)

OTHER PUBLICATIONS

Schmitt, Joseph M.; Zhou, Guan-Xiong; Miller, Justin *Measurement of Blood Hematocrit by Dual-wavelength Near-IR Photoplethysmography*, published May 1992, Proc. SPIE vol. 1641, p. 150-161, Physiological Monitoring and Early Detection Diagnostic Methods, Thomas S. Mang; Ed. (SPIE homepage), in 12 pages.

Primary Examiner—Eric F Winakur
Assistant Examiner—Etsub D Berhanu
(74) *Attorney, Agent, or Firm*—Knobbe, Martens, Olson & Bear, LLP

(57) **ABSTRACT**

A physiological sensor has light emitting sources, each activated by addressing at least one row and at least one column of an electrical grid. The light emitting sources are capable of transmitting light of multiple wavelengths and a detector is responsive to the transmitted light after attenuation by body tissue.

22 Claims, 48 Drawing Sheets

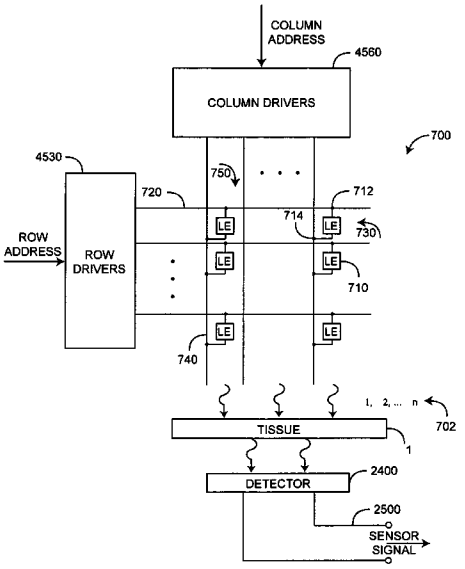

U.S. PATENT DOCUMENTS

4,700,708	A	10/1987	New et al.
4,714,341	A	12/1987	Hamaguri et al.
4,770,179	A	9/1988	New et al.
4,773,422	A	9/1988	Isaacson et al.
4,781,195	A	11/1988	Martin
4,800,885	A	1/1989	Johnson
4,832,484	A	5/1989	Aoyagi et al.
4,846,183	A	7/1989	Martin
4,863,265	A	9/1989	Flower et al.
4,867,571	A	9/1989	Frick et al.
4,869,254	A	9/1989	Stone et al.
4,907,876	A	3/1990	Suzuki et al.
4,911,167	A	3/1990	Corenman et al.
4,934,372	A	6/1990	Corenman et al.
4,942,877	A	7/1990	Sakai et al.
4,955,379	A	9/1990	Hall
4,960,126	A	10/1990	Conlon et al.
4,960,128	A	10/1990	Gordon et al.
4,964,010	A	10/1990	Miyasaka et al.
4,964,408	A	10/1990	Hink et al.
4,967,571	A	11/1990	Sporri
4,975,581	A	12/1990	Robinson et al.
4,986,665	A	1/1991	Yamanishi et al.
4,997,769	A	3/1991	Lundsgaard
RE33,643	E	7/1991	Isaacson et al.
5,033,472	A	7/1991	Sato et al.
5,041,187	A	8/1991	Hink et al.
5,054,495	A	10/1991	Uemura et al.
5,058,588	A	10/1991	Kaestle et al.
5,069,213	A	12/1991	Polczynski
5,078,136	A	1/1992	Stone et al.
5,163,438	A	11/1992	Gordon et al.
5,190,040	A	3/1993	Aoyagi
5,209,230	A	5/1993	Swedlow et al.
5,259,381	A	11/1993	Cheung et al.
5,267,562	A	12/1993	Ukawa et al.
5,267,563	A	12/1993	Swedlow et al.
5,278,627	A	1/1994	Aoyagi
5,297,548	A	3/1994	Pologe
5,313,940	A	5/1994	Fuse et al.
5,331,549	A	7/1994	Crawford, Jr.
5,335,659	A	8/1994	Pologe et al.
5,337,744	A	8/1994	Branigan
5,348,004	A	9/1994	Hollub
5,351,685	A	10/1994	Potratz
5,355,880	A	10/1994	Thomas et al.
5,355,882	A	10/1994	Ukawa et al.
5,361,758	A	11/1994	Hall et al.
5,368,224	A	11/1994	Richardson et al.
D353,195	S	12/1994	Savage et al.
D353,196	S	12/1994	Savage et al.
5,385,143	A	1/1995	Aoyagi
5,387,122	A	2/1995	Goldberger et al.
5,392,777	A	2/1995	Swedlow et al.
5,413,101	A	5/1995	Sugiura
5,421,329	A	6/1995	Casciani et al.
5,427,093	A	6/1995	Ogawa et al.
5,429,128	A	7/1995	Cadell et al.
5,431,170	A	7/1995	Mathews
5,435,309	A	7/1995	Thomas et al.
D361,840	S	8/1995	Savage et al.
D362,063	S	9/1995	Savage et al.
5,452,717	A	9/1995	Branigan et al.
D363,120	S	10/1995	Savage et al.
RE35,122	E	12/1995	Corenman et al.
5,482,036	A	1/1996	Diab et al.
5,490,505	A	2/1996	Diab et al.
5,490,523	A	2/1996	Isaacson et al.
5,494,032	A	2/1996	Robinson et al.
5,494,043	A	2/1996	O'Sullivan et al.
5,503,148	A	4/1996	Pologe et al.
5,520,177	A	5/1996	Ogawa
5,533,507	A	7/1996	Potratz
5,533,511	A	7/1996	Kaspari et al.
5,551,423	A	9/1996	Sugiura
5,553,615	A	9/1996	Carim et al.
5,555,882	A	9/1996	Richardson et al.
5,562,002	A	10/1996	Lalin
5,577,500	A	11/1996	Potratz
5,584,299	A	12/1996	Sakai et al.
5,588,427	A	12/1996	Tien
5,590,649	A	1/1997	Caro et al.
5,590,652	A	1/1997	Inai
5,595,176	A	1/1997	Yamaura
5,596,992	A	1/1997	Haaland et al.
5,602,924	A	2/1997	Durand et al.
5,603,623	A	2/1997	Nishikawa et al.
5,630,413	A	5/1997	Thomas et al.
5,632,272	A	5/1997	Diab et al.
5,638,816	A	6/1997	Kiani-Azarbayjany et al.
5,638,818	A	6/1997	Diab et al.
5,645,059	A	7/1997	Fein et al.
5,645,060	A	7/1997	Yorkey
5,645,440	A	7/1997	Tobler et al.
5,660,567	A	8/1997	Nierlich et al.
5,662,106	A	9/1997	Swedlow et al.
5,676,139	A	10/1997	Goldberger et al.
5,676,141	A	10/1997	Hollub
5,678,544	A	10/1997	DeLonzor et al.
5,685,299	A	11/1997	Diab et al.
5,685,301	A	11/1997	Klomhaus
5,687,719	A	11/1997	Sato et al.
5,687,722	A	11/1997	Tien et al.
5,690,104	A	11/1997	Kanemoto et al.
5,692,503	A	12/1997	Kuenstner
5,697,371	A	12/1997	Aoyagi
5,713,355	A	2/1998	Richardson et al.
D393,830	S	4/1998	Tobler et al.
5,743,262	A	4/1998	Lepper, Jr. et al.
5,743,263	A	4/1998	Baker, Jr.
5,746,206	A	5/1998	Mannheimer
5,746,697	A	5/1998	Swedlow et al.
5,752,914	A	5/1998	Delonzor et al.
5,755,226	A	5/1998	Carim et al.
5,758,644	A	6/1998	Diab et al.
5,760,910	A	6/1998	Lepper, Jr. et al.
5,769,785	A	6/1998	Diab et al.
5,772,587	A	6/1998	Gratton et al.
5,779,630	A	7/1998	Fein et al.
5,782,237	A	7/1998	Casciani et al.
5,782,756	A	7/1998	Mannheimer
5,782,757	A	7/1998	Diab et al.
5,785,659	A	7/1998	Caro et al.
5,790,729	A	8/1998	Pologe et al.
5,791,347	A	8/1998	Flaherty et al.
5,792,052	A	8/1998	Isaacson et al.
5,793,485	A	8/1998	Gourley
5,800,348	A	9/1998	Kaestle et al.
5,800,349	A	9/1998	Isaacson et al.
5,803,910	A	9/1998	Potratz
5,807,246	A	9/1998	Sakaguchi et al.
5,807,247	A	9/1998	Merchant et al.
5,810,723	A	9/1998	Aldrich
5,810,724	A	9/1998	Gronvall
5,810,734	A	9/1998	Caro et al.
5,817,010	A	10/1998	Hibl
5,818,985	A	10/1998	Merchant et al.
5,823,950	A	10/1998	Diab et al.
5,823,952	A	10/1998	Levinson et al.
5,827,182	A	10/1998	Raley
5,830,131	A	11/1998	Caro et al.
5,830,137	A	11/1998	Scharf
5,833,618	A	11/1998	Caro et al.
5,839,439	A	11/1998	Nierlich et al.

RE36,000 E 12/1998 Swedlow et al.
5,842,979 A 12/1998 Jarman
5,851,178 A 12/1998 Aronow
5,851,179 A 12/1998 Ritson et al.
5,853,364 A 12/1998 Baker, Jr. et al.
5,857,462 A 1/1999 Thomas et al.
5,860,919 A 1/1999 Kiani-Azarbayjany et al.
5,865,736 A 2/1999 Baker, Jr. et al.
5,876,348 A 3/1999 Sugo
5,885,213 A 3/1999 Richardson et al.
5,890,929 A 4/1999 Mills et al.
5,891,024 A 4/1999 Jarman et al.
5,904,654 A 5/1999 Wohltmann et al.
5,910,108 A 6/1999 Solenberger
5,916,154 A 6/1999 Hobbs et al.
5,919,133 A 7/1999 Taylor
5,919,134 A 7/1999 Diab
5,921,921 A 7/1999 Potratz et al.
5,934,277 A 8/1999 Mortz
5,934,925 A 8/1999 Tobler et al.
5,940,182 A 8/1999 Lepper, Jr. et al.
5,954,644 A 9/1999 Dettling
5,978,691 A 11/1999 Mills
5,983,122 A 11/1999 Jarman et al.
5,995,855 A 11/1999 Kiani et al.
5,995,856 A 11/1999 Mannheimer et al.
5,995,859 A 11/1999 Takahashi
5,997,343 A 12/1999 Mills et al.
5,999,841 A 12/1999 Aoyagi et al.
6,002,952 A 12/1999 Diab et al.
6,006,119 A 12/1999 Soller et al.
6,011,986 A 1/2000 Diab et al.
6,014,576 A 1/2000 Raley
6,018,673 A 1/2000 Chin et al.
6,018,674 A 1/2000 Aronow
6,023,541 A 2/2000 Merchant et al.
6,027,452 A 2/2000 Flaherty et al.
6,036,642 A 3/2000 Diab et al.
6,045,509 A 4/2000 Caro et al.
6,064,898 A 5/2000 Aldrich
6,067,462 A 5/2000 Diab et al.
6,068,594 A 5/2000 Schloemer et al.
6,073,037 A 6/2000 Alam et al.
6,081,735 A 6/2000 Diab et al.
6,083,172 A 7/2000 Baker, Jr. et al.
6,088,607 A 7/2000 Diab et al.
6,094,592 A 7/2000 Yorkey et al.
6,104,938 A 8/2000 Huiku
6,110,522 A 8/2000 Lepper, Jr. et al.
6,112,107 A 8/2000 Hannula
6,122,042 A 9/2000 Wunderman et al.
6,144,868 A 11/2000 Parker
6,151,516 A 11/2000 Kiani-Azarbayjany et al.
6,151,518 A 11/2000 Hayashi
6,152,754 A 11/2000 Gerhardt et al.
6,154,667 A 11/2000 Miura et al.
6,157,041 A 12/2000 Thomas et al.
6,157,850 A 12/2000 Diab et al.
6,165,005 A 12/2000 Mills et al.
6,184,521 B1 2/2001 Coffin, IV et al.
6,192,261 B1 2/2001 Gratton et al.
6,206,830 B1 3/2001 Diab et al.
6,226,539 B1 5/2001 Potratz
6,229,856 B1 5/2001 Diab et al.
6,230,035 B1 5/2001 Aoyagi et al.
6,236,872 B1 5/2001 Diab et al.
6,253,097 B1 6/2001 Aronow et al.
6,256,523 B1 7/2001 Diab et al.
6,262,698 B1 * 7/2001 Blum 345/55
6,263,222 B1 7/2001 Diab et al.
6,272,363 B1 8/2001 Casciani et al.
6,278,522 B1 8/2001 Lepper, Jr. et al.
6,280,213 B1 8/2001 Tobler et al.
6,285,895 B1 9/2001 Ristolainen et al.
6,285,896 B1 9/2001 Tobler et al.
6,298,252 B1 10/2001 Kovach et al.
6,304,675 B1 10/2001 Osbourn et al.
6,304,767 B1 10/2001 Soller et al.
6,321,100 B1 11/2001 Parker
6,330,468 B1 12/2001 Scharf
6,334,065 B1 12/2001 Al-Ali et al.
6,341,257 B1 1/2002 Haaland
6,343,224 B1 1/2002 Parker
6,349,228 B1 2/2002 Kiani et al.
6,351,658 B1 2/2002 Middleman et al.
6,356,774 B1 3/2002 Bernstein et al.
6,360,114 B1 3/2002 Diab et al.
6,363,269 B1 3/2002 Hanna et al.
6,371,921 B1 4/2002 Caro et al.
6,374,129 B1 4/2002 Chin et al.
6,377,828 B1 4/2002 Chaiken et al.
6,377,829 B1 4/2002 Al-Ali
6,388,240 B2 5/2002 Schulz et al.
6,393,310 B1 5/2002 Kuenstner
6,397,091 B2 5/2002 Diab et al.
6,397,092 B1 5/2002 Norris et al.
6,397,093 B1 5/2002 Aldrich
6,408,198 B1 6/2002 Hanna et al.
6,411,833 B1 6/2002 Baker, Jr. et al.
6,415,166 B1 7/2002 Van Hoy et al.
6,415,233 B1 7/2002 Haaland
6,415,236 B2 7/2002 Kobayashi et al.
6,430,525 B1 8/2002 Weber et al.
6,434,408 B1 8/2002 Heckel
6,441,388 B1 8/2002 Thomas et al.
6,453,184 B1 9/2002 Hyogo et al.
6,463,310 B1 10/2002 Swedlow et al.
6,463,311 B1 10/2002 Diab
6,470,199 B1 10/2002 Kopotic et al.
6,480,729 B2 11/2002 Stone
6,490,466 B1 12/2002 Fein et al.
6,497,659 B1 12/2002 Rafert
6,501,974 B2 12/2002 Huiku
6,501,975 B2 12/2002 Diab et al.
6,504,943 B1 1/2003 Sweatt et al.
6,505,060 B1 1/2003 Norris
6,505,061 B2 1/2003 Larson
6,505,133 B1 1/2003 Hanna
6,510,329 B2 1/2003 Heckel
6,515,273 B2 2/2003 Al-Ali
6,519,486 B1 2/2003 Edgar, Jr. et al.
6,519,487 B1 2/2003 Parker
6,522,398 B2 2/2003 Cadell et al.
6,525,386 B1 2/2003 Mills et al.
6,526,300 B1 2/2003 Kiani et al.
6,526,301 B2 2/2003 Larsen et al.
6,528,809 B1 3/2003 Thomas et al.
6,537,225 B1 3/2003 Mills
6,541,756 B2 4/2003 Schulz et al.
6,542,764 B1 4/2003 Al-Ali et al.
6,545,652 B1 * 4/2003 Tsuji 345/82
6,546,267 B1 4/2003 Sugiura
6,553,241 B2 4/2003 Mannheimer et al.
6,564,077 B2 5/2003 Mortara
6,571,113 B1 5/2003 Fein et al.
6,580,086 B1 6/2003 Schulz et al.
6,582,964 B1 6/2003 Samsoondar et al.
6,584,336 B1 6/2003 Ali et al.
6,584,413 B1 6/2003 Keenan et al.
6,591,123 B2 7/2003 Fein et al.
6,594,511 B2 7/2003 Stone et al.
6,595,316 B2 7/2003 Cybulski et al.
6,597,933 B2 7/2003 Kiani et al.
6,600,940 B1 7/2003 Fein et al.
6,606,509 B2 8/2003 Schmitt
6,606,510 B2 8/2003 Swedlow et al.

6,606,511 B1 8/2003 Ali et al.
6,611,698 B1 8/2003 Yamashita et al.
6,614,521 B2 9/2003 Samsoondar et al.
6,615,064 B1 9/2003 Aldrich
6,615,151 B1 9/2003 Scecina et al.
6,618,602 B2 9/2003 Levin
6,622,095 B2 9/2003 Kobayashi et al.
6,628,975 B1 9/2003 Fein et al.
6,631,281 B1 10/2003 Kastle
6,632,181 B2 10/2003 Flaherty et al.
6,640,116 B2 10/2003 Diab
6,643,530 B2 11/2003 Diab et al.
6,650,917 B2 11/2003 Diab et al.
6,654,623 B1 11/2003 Kastle
6,654,624 B2 11/2003 Diab et al.
6,657,717 B2 12/2003 Cadell et al.
6,658,276 B2 12/2003 Kianl et al.
6,658,277 B2 12/2003 Wasserman
6,661,161 B1 12/2003 Lanzo et al.
6,662,033 B2 12/2003 Casciani et al.
6,665,551 B1 12/2003 Suzuki
6,668,183 B2 12/2003 Hicks et al.
6,671,526 B1 12/2003 Aoyagi et al.
6,671,531 B2 12/2003 Al-Ali et al.
6,675,031 B1 1/2004 Porges et al.
6,675,106 B1 1/2004 Keenan et al.
6,678,543 B2 1/2004 Diab et al.
6,681,126 B2 1/2004 Solenberger
6,684,090 B2 1/2004 Ali et al.
6,684,091 B2 1/2004 Parker
6,687,620 B1 2/2004 Haaland et al.
6,694,157 B1 2/2004 Stone et al.
6,697,655 B2 2/2004 Sueppel et al.
6,697,656 B1 2/2004 Al-Ali
6,697,658 B2 2/2004 Al-Ali
RE38,476 E 3/2004 Diab et al.
6,699,194 B1 3/2004 Diab et al.
6,701,170 B2 3/2004 Stetson
6,708,049 B1 3/2004 Berson et al.
6,711,503 B2 3/2004 Haaland
6,714,803 B1 3/2004 Mortz
6,714,804 B2 3/2004 Al-Ali et al.
6,714,805 B2 3/2004 Jeon et al.
RE38,492 E 4/2004 Diab et al.
6,719,705 B2 4/2004 Mills
6,720,734 B2 4/2004 Norris
6,721,584 B2 4/2004 Baker, Jr. et al.
6,721,585 B1 4/2004 Parker
6,725,074 B1 4/2004 Kastle
6,725,075 B2 4/2004 Al-Ali
6,726,634 B2 4/2004 Freeman
6,735,459 B2 5/2004 Parker
6,741,875 B1 5/2004 Pawluczyk et al.
6,741,876 B1 5/2004 Scecina et al.
6,743,172 B1 6/2004 Blike
6,745,060 B2 6/2004 Diab et al.
6,745,061 B1 6/2004 Hicks et al.
6,748,253 B2 6/2004 Norris et al.
6,748,254 B2 6/2004 O'Neil et al.
6,754,515 B1 6/2004 Pologe
6,754,516 B2 6/2004 Mannheimer
6,760,607 B2 7/2004 Al-Ali
6,760,609 B2 7/2004 Jacques
6,770,028 B1 8/2004 Ali et al.
6,771,994 B2 8/2004 Kiani et al.
6,773,397 B2 8/2004 Kelly
6,778,923 B2 8/2004 Norris et al.
6,780,158 B2 8/2004 Yarita
6,788,849 B1 9/2004 Pawluczyk
6,792,300 B1 9/2004 Diab et al.
6,801,797 B2 10/2004 Mannheimer et al.
6,801,799 B2 10/2004 Mendelson
6,810,277 B2 10/2004 Edgar, Jr. et al.
6,813,511 B2 11/2004 Diab et al.
6,816,741 B2 11/2004 Diab
6,819,950 B2 11/2004 Mills
6,822,564 B2 11/2004 Al-Ali
6,825,619 B2 11/2004 Norris
6,826,419 B2 11/2004 Diab et al.
6,829,496 B2 12/2004 Nagai et al.
6,830,711 B2 12/2004 Mills et al.
6,836,679 B2 12/2004 Baker, Jr. et al.
6,839,579 B1 1/2005 Chin
6,839,580 B2 1/2005 Zonios et al.
6,839,582 B2 1/2005 Heckel
6,842,702 B2 1/2005 Haaland et al.
6,845,256 B2 1/2005 Chin et al.
6,847,835 B1 1/2005 Yamanishi
6,850,787 B2 2/2005 Weber et al.
6,850,788 B2 2/2005 Al-Ali
6,852,083 B2 2/2005 Caro et al.
6,861,639 B2 3/2005 Al-Ali
6,869,402 B2 3/2005 Arnold
6,882,874 B2 4/2005 Huiku
6,898,452 B2 5/2005 Al-Ali et al.
6,912,049 B2 6/2005 Pawluczyk et al.
6,917,422 B2 7/2005 Samsoondar et al.
6,919,566 B1 7/2005 Cadell
6,920,345 B2 7/2005 Al-Ali et al.
6,921,367 B2 7/2005 Mills
6,922,645 B2 7/2005 Haaland et al.
6,928,311 B1 8/2005 Pawluczyk et al.
6,931,268 B1 8/2005 Kiani-Azarbayjany et al.
6,931,269 B2 8/2005 Terry
6,934,570 B2 8/2005 Kiani et al.
6,939,305 B2 9/2005 Flaherty et al.
6,943,348 B1 9/2005 Coffin, IV
6,944,487 B2 9/2005 Maynard et al.
6,950,687 B2 9/2005 Al-Ali
6,961,598 B2 11/2005 Diab
6,970,792 B1 11/2005 Diab
6,975,891 B2 12/2005 Pawluczyk
6,979,812 B2 12/2005 Al-Ali
6,985,764 B2 1/2006 Mason et al.
6,987,994 B1 1/2006 Mortz
6,993,371 B2 1/2006 Kiani et al.
6,996,427 B2 2/2006 Ali et al.
6,999,904 B2 2/2006 Weber et al.
7,001,337 B2 2/2006 Dekker
7,003,338 B2 2/2006 Weber et al.
7,003,339 B2 2/2006 Diab et al.
7,006,856 B2 2/2006 Baker, Jr. et al.
7,015,451 B2 3/2006 Dalke et al.
7,024,233 B2 4/2006 Al et al.
7,027,849 B2 4/2006 Al-Ali
7,030,749 B2 4/2006 Al-Ali
7,039,449 B2 5/2006 Al-Ali
7,041,060 B2 5/2006 Flaherty et al.
7,044,918 B2 5/2006 Diab
7,245,953 B1 7/2007 Parker
7,377,794 B2 5/2008 Al-Ali et al.
2001/0044700 A1 11/2001 Koboyashi et al.
2001/0045532 A1 11/2001 Schulz et al.
2002/0021269 A1 2/2002 Rast
2002/0035318 A1* 3/2002 Mannheimer et al. 600/323
2002/0038078 A1 3/2002 Ito
2002/0038081 A1 3/2002 Fein et al.
2002/0059047 A1 5/2002 Haaland
2002/0111748 A1 8/2002 Kobayashi et al.
2002/0115919 A1 8/2002 Al-Ali
2002/0156353 A1 10/2002 Larson
2002/0159002 A1* 10/2002 Chang 349/61
2002/0161291 A1 10/2002 Kiani et al.
2002/0165440 A1 11/2002 Mason et al.
2002/0183819 A1 12/2002 Struble
2003/0045784 A1 3/2003 Palatnik et al.

2003/0045785 A1* 3/2003 Diab et al. 600/323
2003/0109775 A1 6/2003 O'Neil et al.
2003/0120160 A1 6/2003 Yarita
2003/0139657 A1 7/2003 Solenberger
2003/0195402 A1 10/2003 Fein et al.
2004/0006261 A1 1/2004 Swedlow et al.
2004/0033618 A1 2/2004 Haass et al.
2004/0059209 A1 3/2004 Al Ali et al.
2004/0064259 A1 4/2004 Haaland et al.
2004/0081621 A1* 4/2004 Arndt et al. 424/9.6
2004/0092805 A1 5/2004 Yarita
2004/0133087 A1 7/2004 Al Ali et al.
2004/0138538 A1 7/2004 Stetson
2004/0138540 A1 7/2004 Baker, Jr. et al.
2004/0147823 A1 7/2004 Kiani et al.
2004/0158134 A1 8/2004 Diab et al.
2004/0158135 A1 8/2004 Baker, Jr. et al.
2004/0162472 A1 8/2004 Berson et al.
2004/0167382 A1 8/2004 Gardner et al.
2004/0176670 A1 9/2004 Takamura et al.
2004/0181134 A1 9/2004 Baker, Jr. et al.
2004/0199063 A1 10/2004 O'Neil et al.
2004/0204639 A1 10/2004 Casciani et al.
2004/0204868 A1 10/2004 Maynard et al.
2004/0262046 A1 12/2004 Simon et al.
2004/0267103 A1 12/2004 Li et al.
2004/0267140 A1 12/2004 Ito et al.
2005/0033128 A1 2/2005 Al Ali et al.
2005/0043902 A1 2/2005 Haaland et al.
2005/0049469 A1 3/2005 Aoyagi et al.
2005/0054908 A1* 3/2005 Blank et al. 600/316
2005/0070773 A1 3/2005 Chin et al.
2005/0070775 A1 3/2005 Chin et al.
2005/0075546 A1 4/2005 Samsoondar et al.
2005/0085735 A1 4/2005 Baker, Jr. et al.
2005/0101848 A1 5/2005 Al Ali et al.
2005/0124871 A1 6/2005 Baker, Jr. et al.
2005/0143634 A1 6/2005 Baker, Jr. et al.
2005/0143943 A1 6/2005 Brown
2005/0148834 A1 7/2005 Hull et al.
2005/0184895 A1 8/2005 Petersen et al.
2005/0187447 A1 8/2005 Chew et al.
2005/0187448 A1 8/2005 Petersen et al.
2005/0187449 A1 8/2005 Chew et al.
2005/0187450 A1 8/2005 Chew et al.
2005/0187452 A1 8/2005 Petersen et al.
2005/0187453 A1 8/2005 Petersen et al.
2005/0197549 A1 9/2005 Baker, Jr.
2005/0197579 A1 9/2005 Baker, Jr.
2005/0197793 A1 9/2005 Baker, Jr.
2005/0203357 A1 9/2005 Debreczeny et al.
2005/0228253 A1 10/2005 Debreczeny
2005/0250997 A1 11/2005 Takeda et al.
2006/0030764 A1 2/2006 Porges et al.

FOREIGN PATENT DOCUMENTS

WO WO 00/59374 10/2000
WO WO 02/26123 4/2002
WO WO 03/068060 8/2003

* cited by examiner

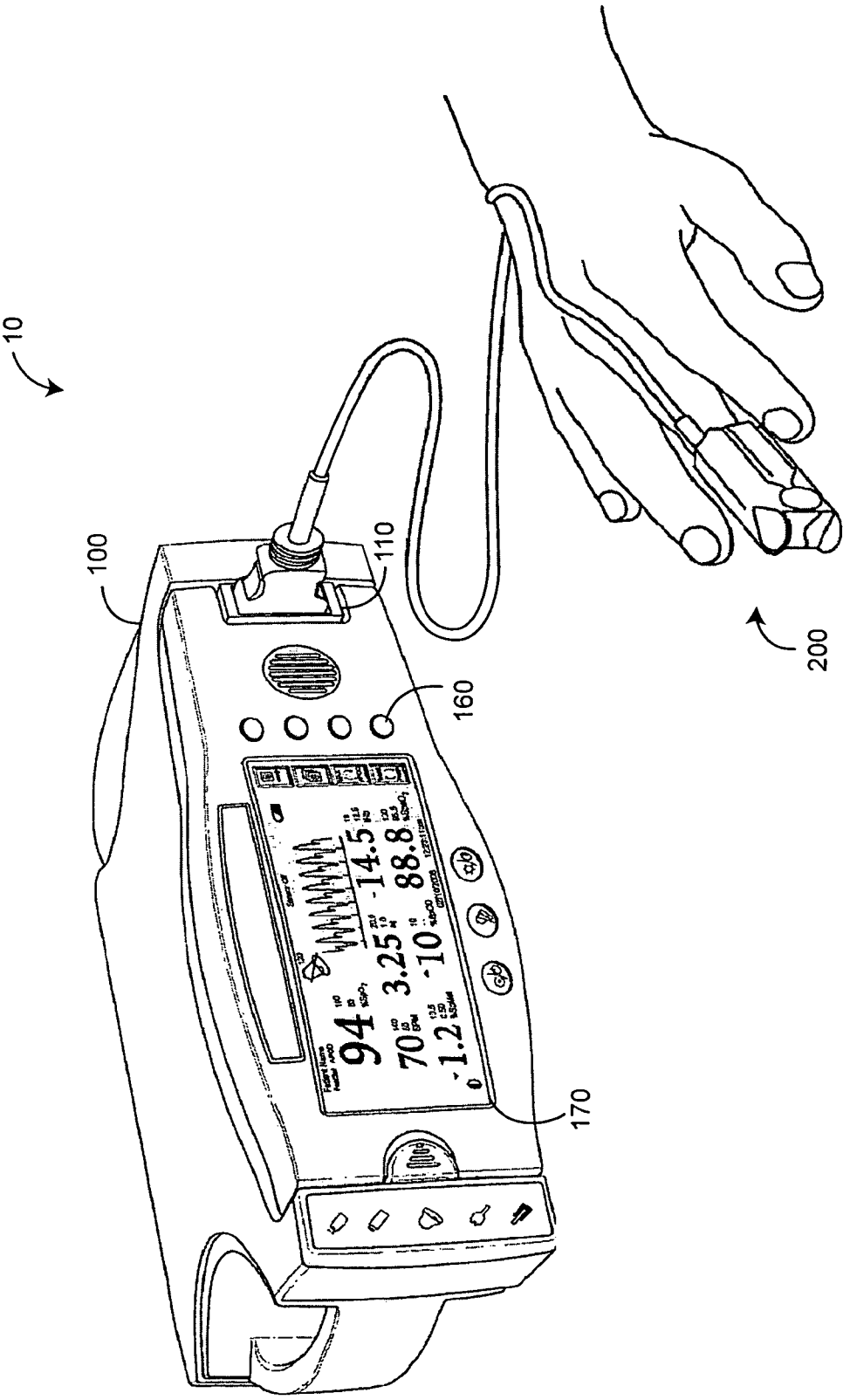

FIG. 1

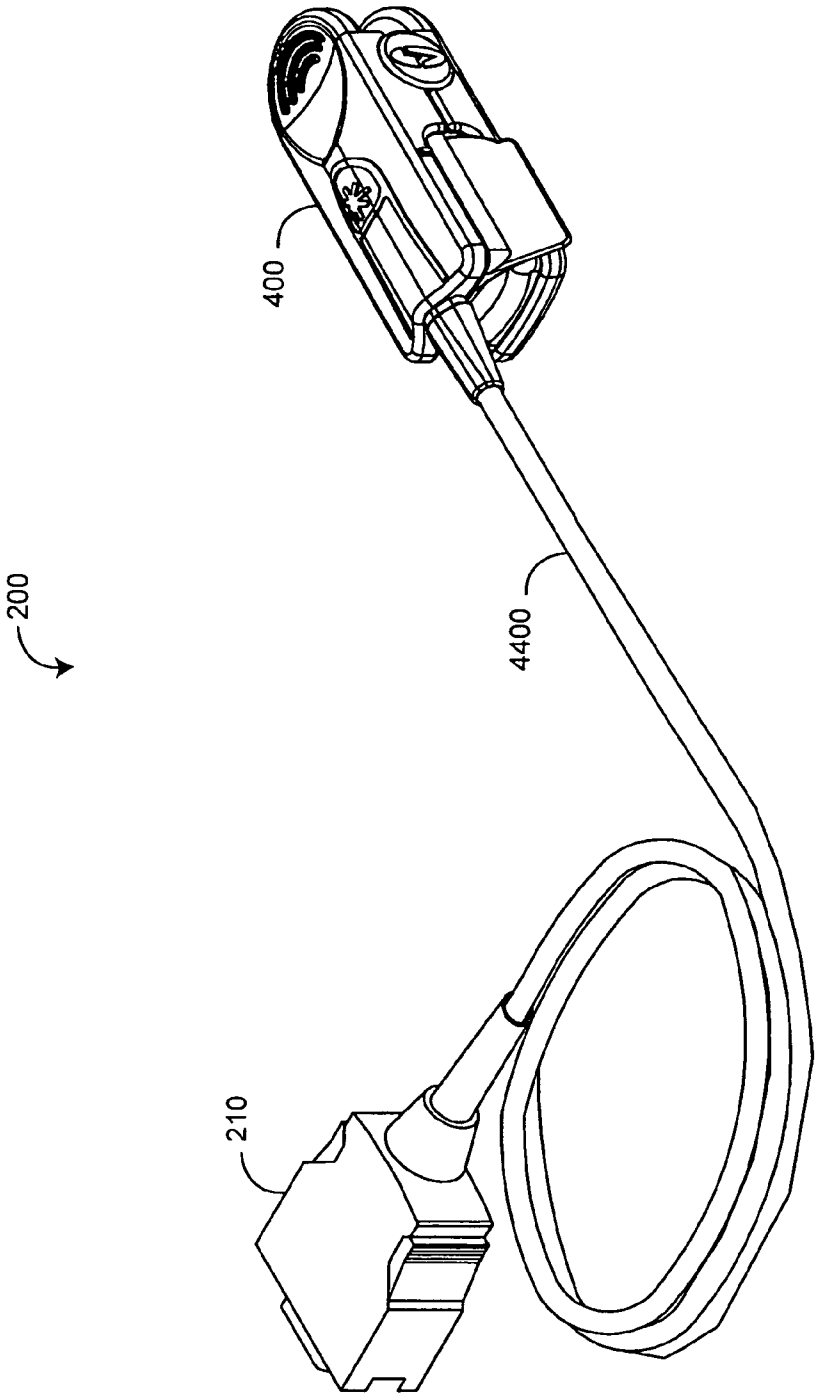

FIG. 2A

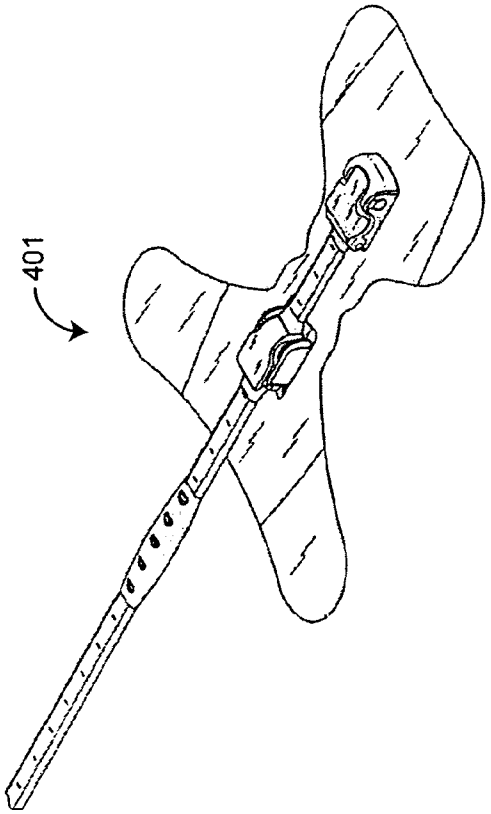

FIG. 2B

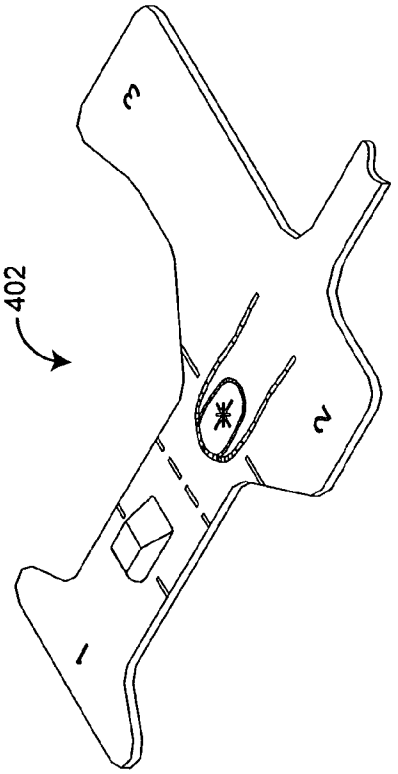

FIG. 2C

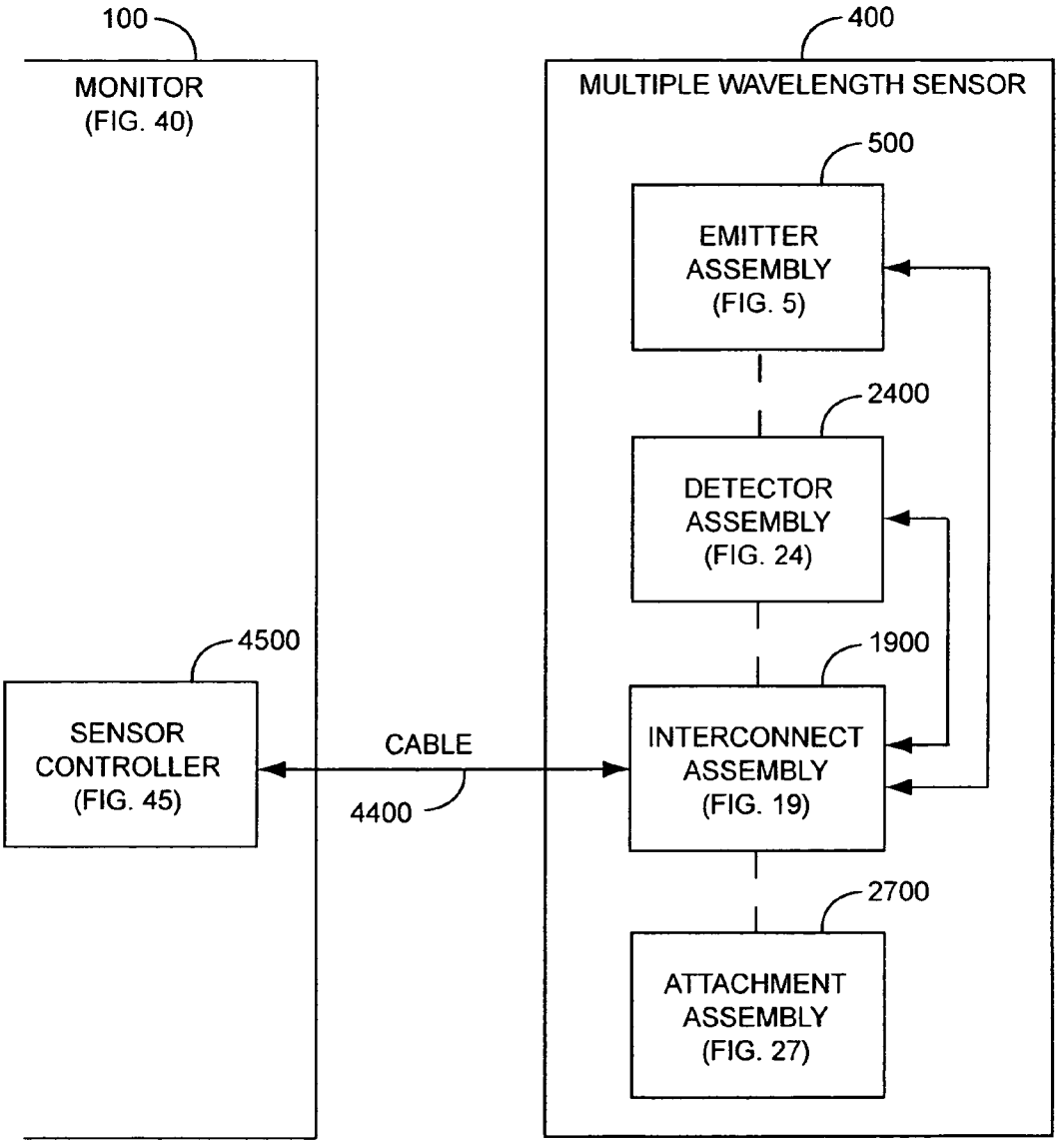
100
MONITOR
(FIG. 40)
400
MULTIPLE WAVELENGTH SENSOR
500
EMITTER
ASSEMBLY
(FIG. 5)
2400
DETECTOR
ASSEMBLY
(FIG. 24)
1900
INTERCONNECT
ASSEMBLY
(FIG. 19)
2700
ATTACHMENT
ASSEMBLY
(FIG. 27)
4500
SENSOR
CONTROLLER
(FIG. 45)
CABLE
4400

FIG. 3

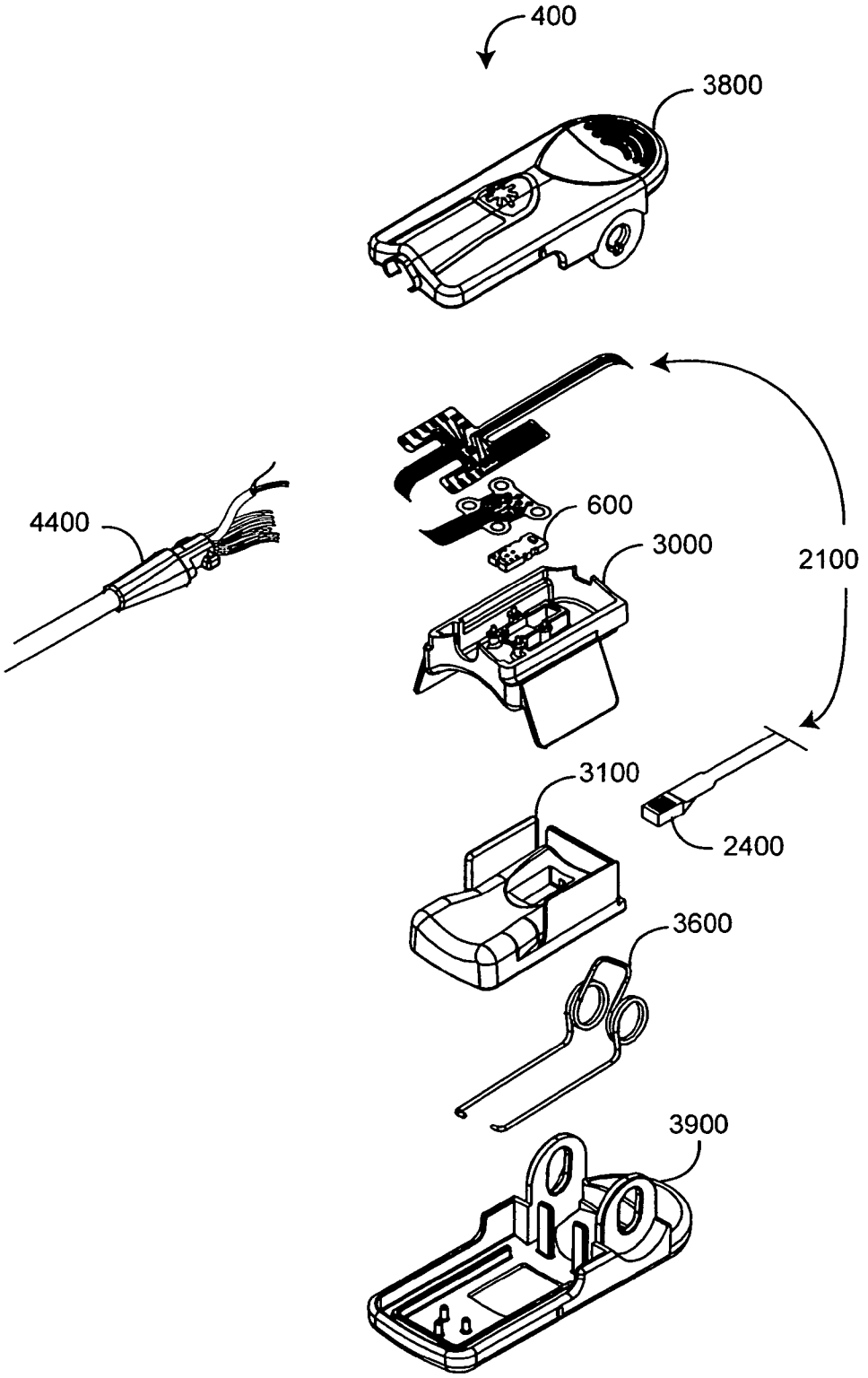

FIG. 4

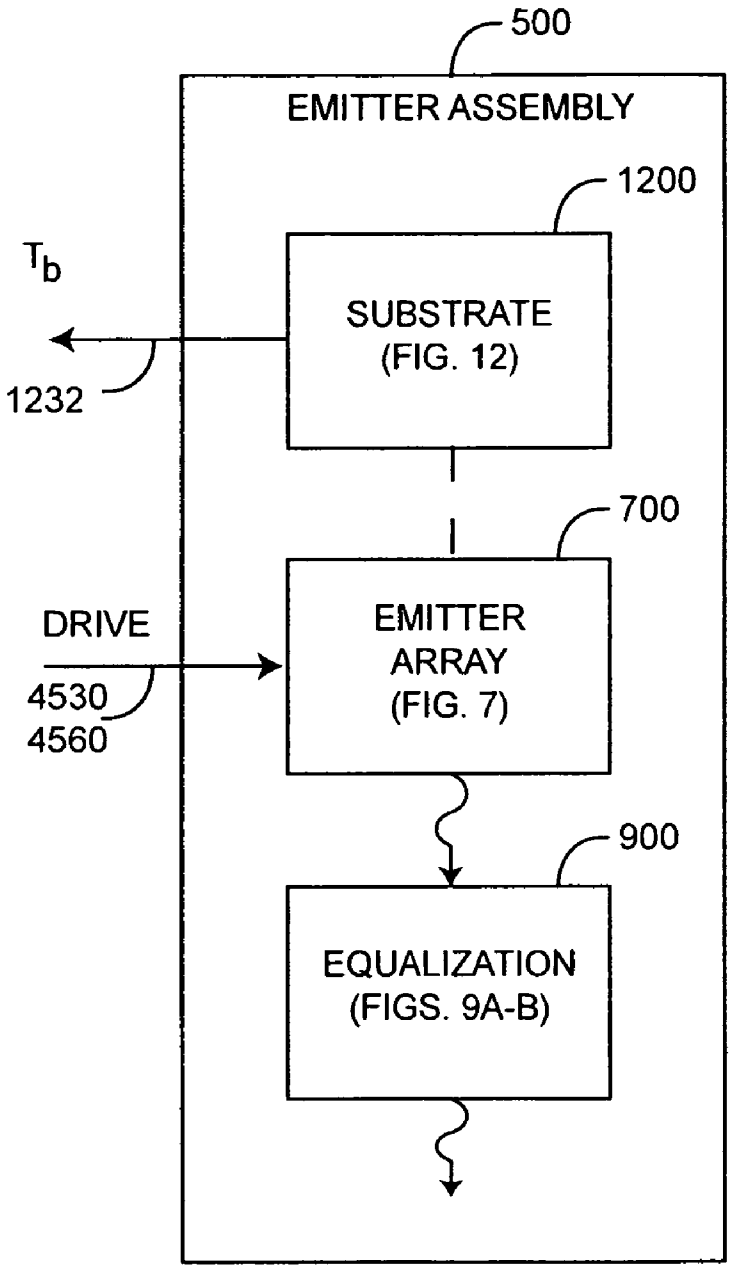
500
EMITTER ASSEMBLY
1200
T_b
SUBSTRATE
(FIG. 12)
1232
700
DRIVE
EMITTER
ARRAY
(FIG. 7)
4530
4560
900
EQUALIZATION
(FIGS. 9A-B)

FIG. 5

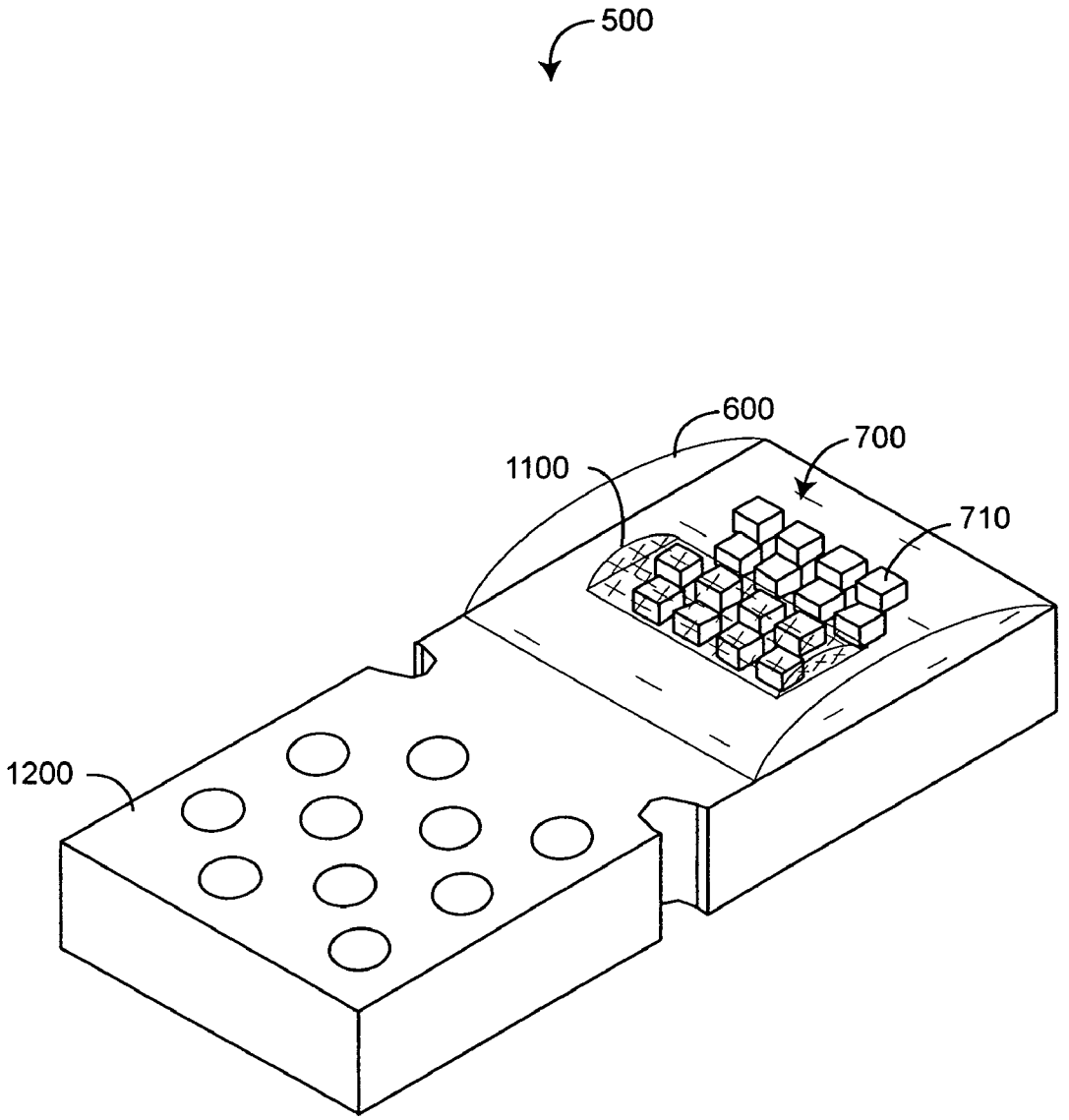

FIG. 6

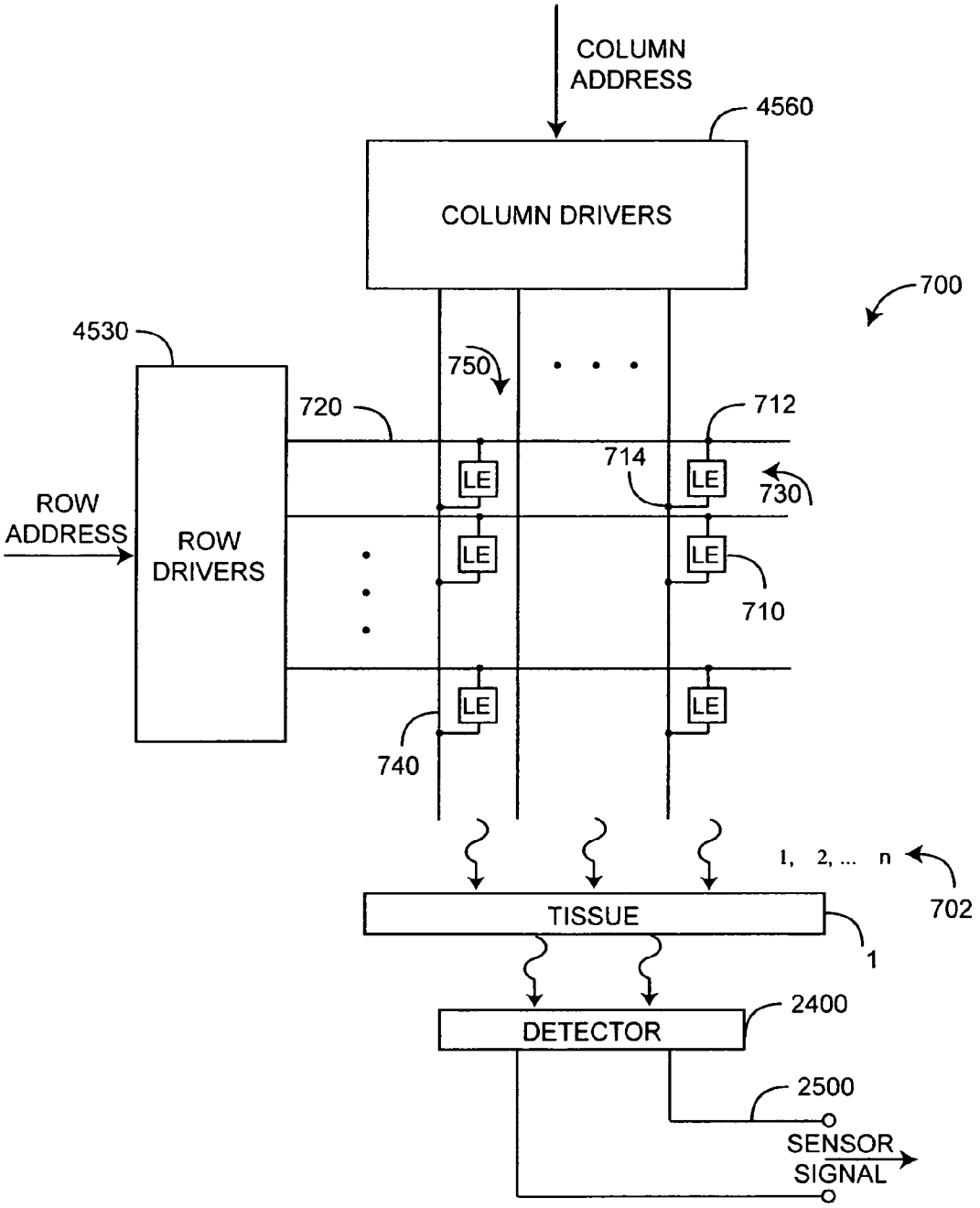
COLUMN ADDRESS
4560
COLUMN DRIVERS
700
4530
750
720
712
714
LE
730
ROW ADDRESS
ROW DRIVERS
710
740
1, 2, ... n
702
TISSUE
1
DETECTOR
2400
2500
SENSOR SIGNAL

FIG. 7

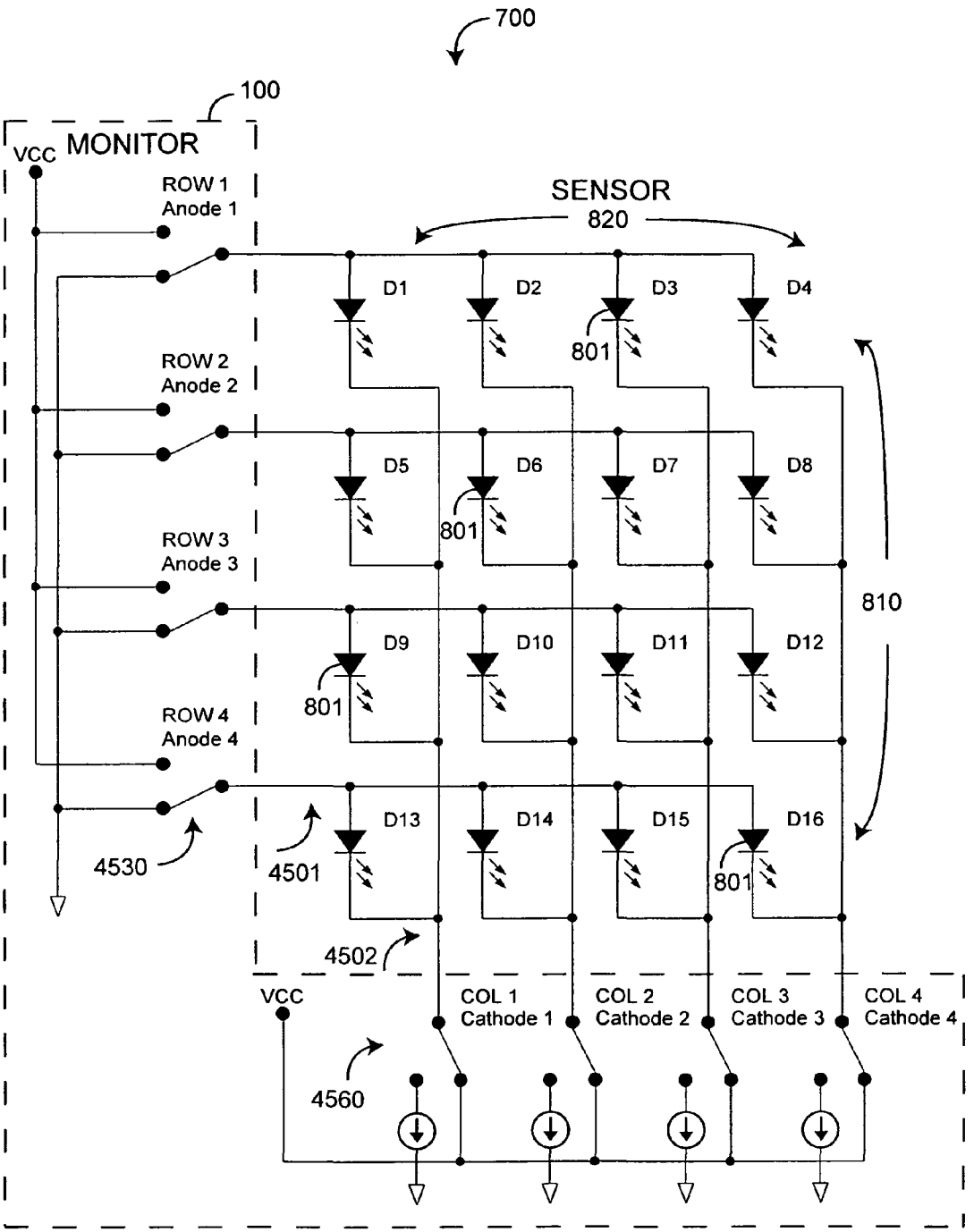
700
100
MONITOR
VCC
ROW 1
Anode 1
ROW 2
Anode 2
ROW 3
Anode 3
ROW 4
Anode 4
SENSOR
820
D1
D2
D3
D4
D5
D6
D7
D8
D9
D10
D11
D12
D13
D14
D15
D16
801
810
4530
4501
4502
4560
VCC
COL 1
Cathode 1
COL 2
Cathode 2
COL 3
Cathode 3
COL 4
Cathode 4

FIG. 8

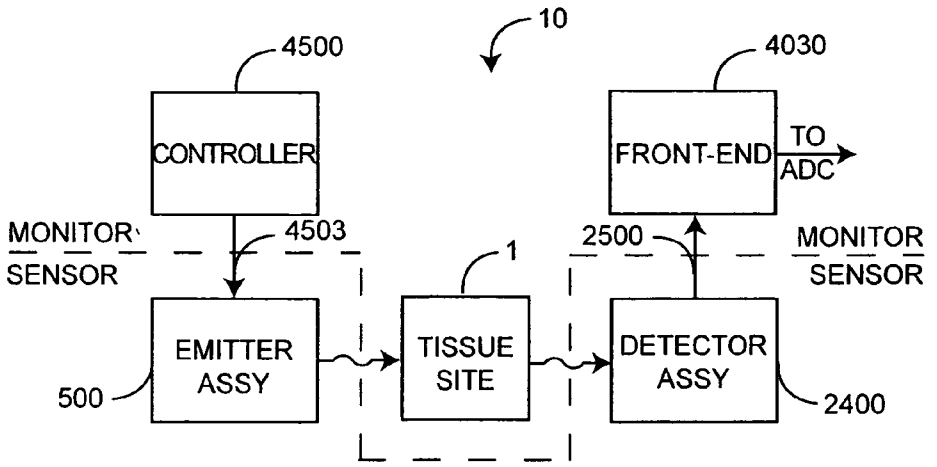
10
4500
CONTROLLER
4030
FRONT-END
TO ADC
MONITOR SENSOR
4503
1
2500
MONITOR SENSOR
EMITTER ASSY
TISSUE SITE
DETECTOR ASSY
500
2400

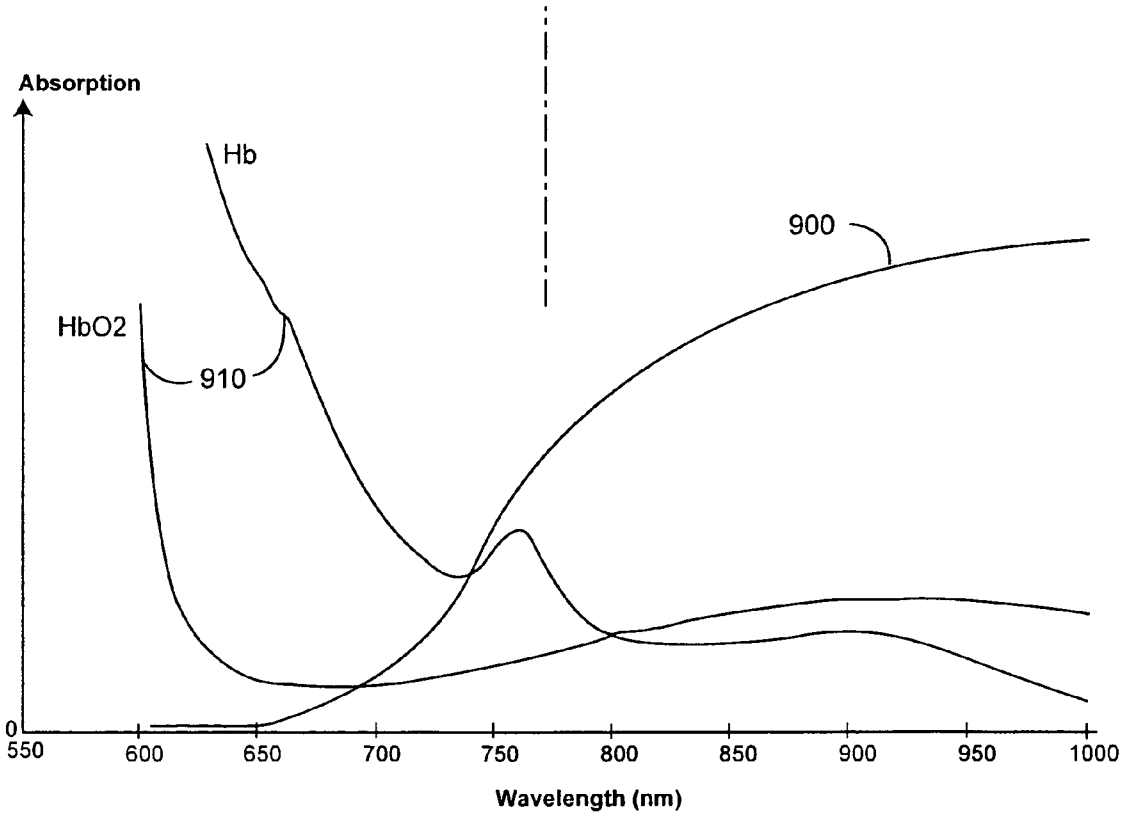
Absorption
Hb
900
HbO2
910
0
550
600
650
700
750
800
850
900
950
1000
Wavelength (nm)

FIG. 9

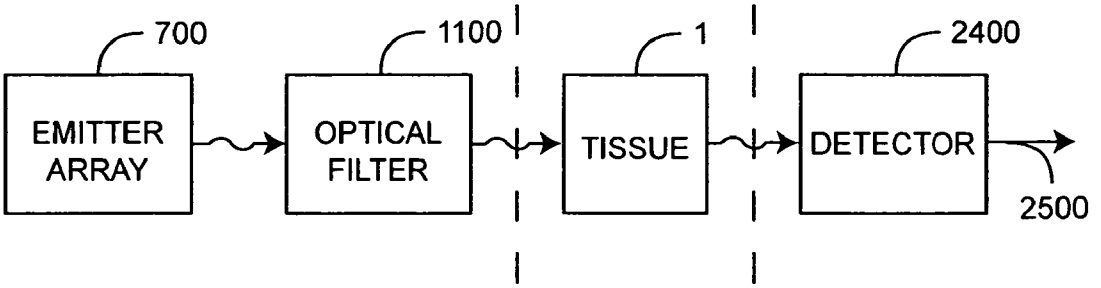

FIG. 10A

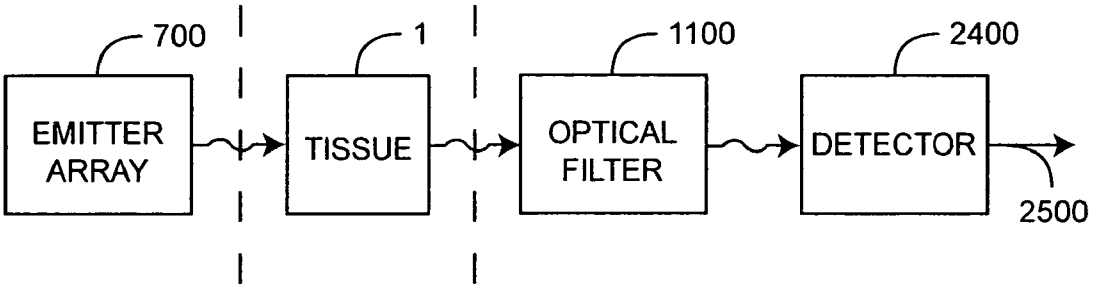

FIG. 10B

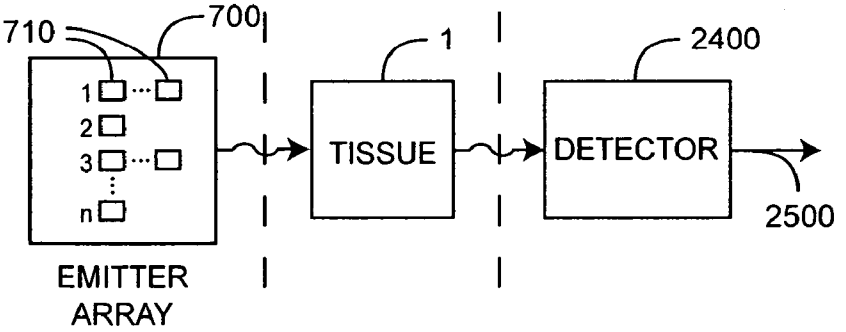

FIG. 10C

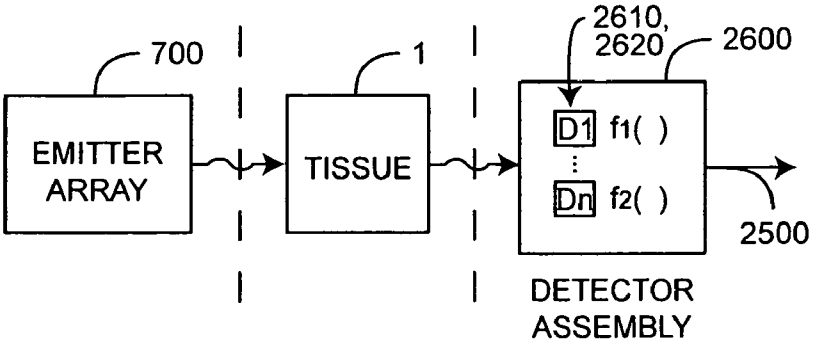

FIG. 10D

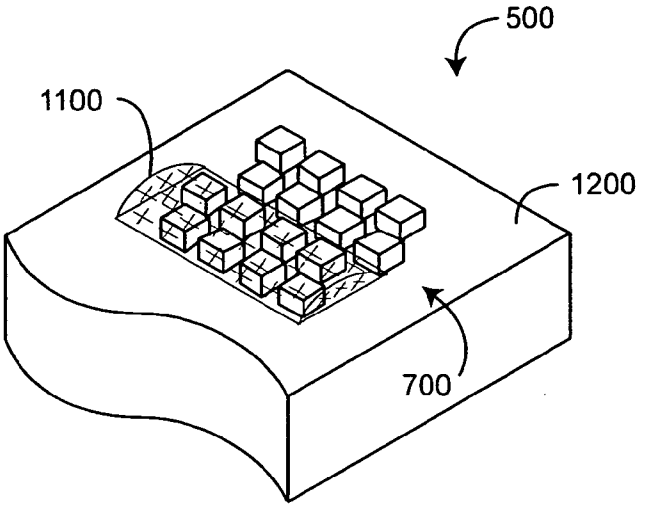

FIG. 11A

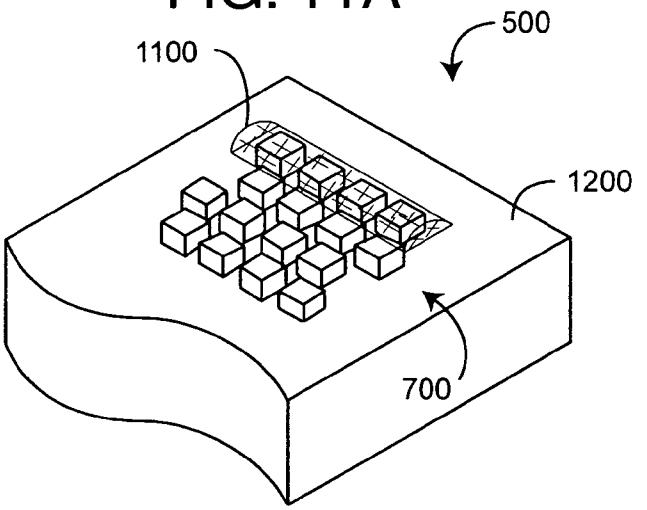

FIG. 11B

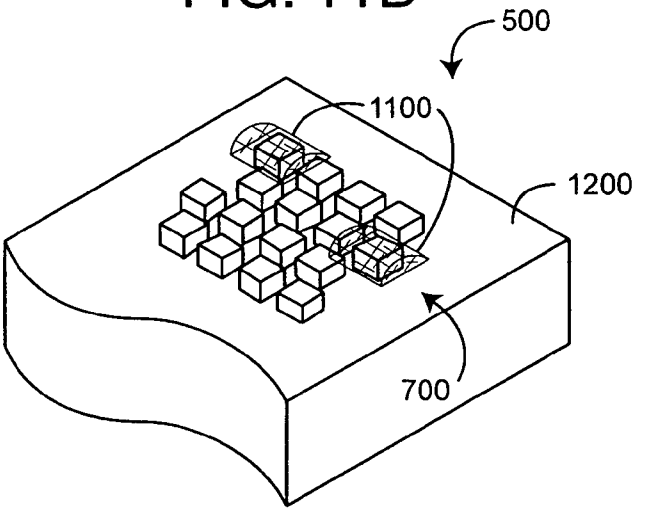

FIG. 11C

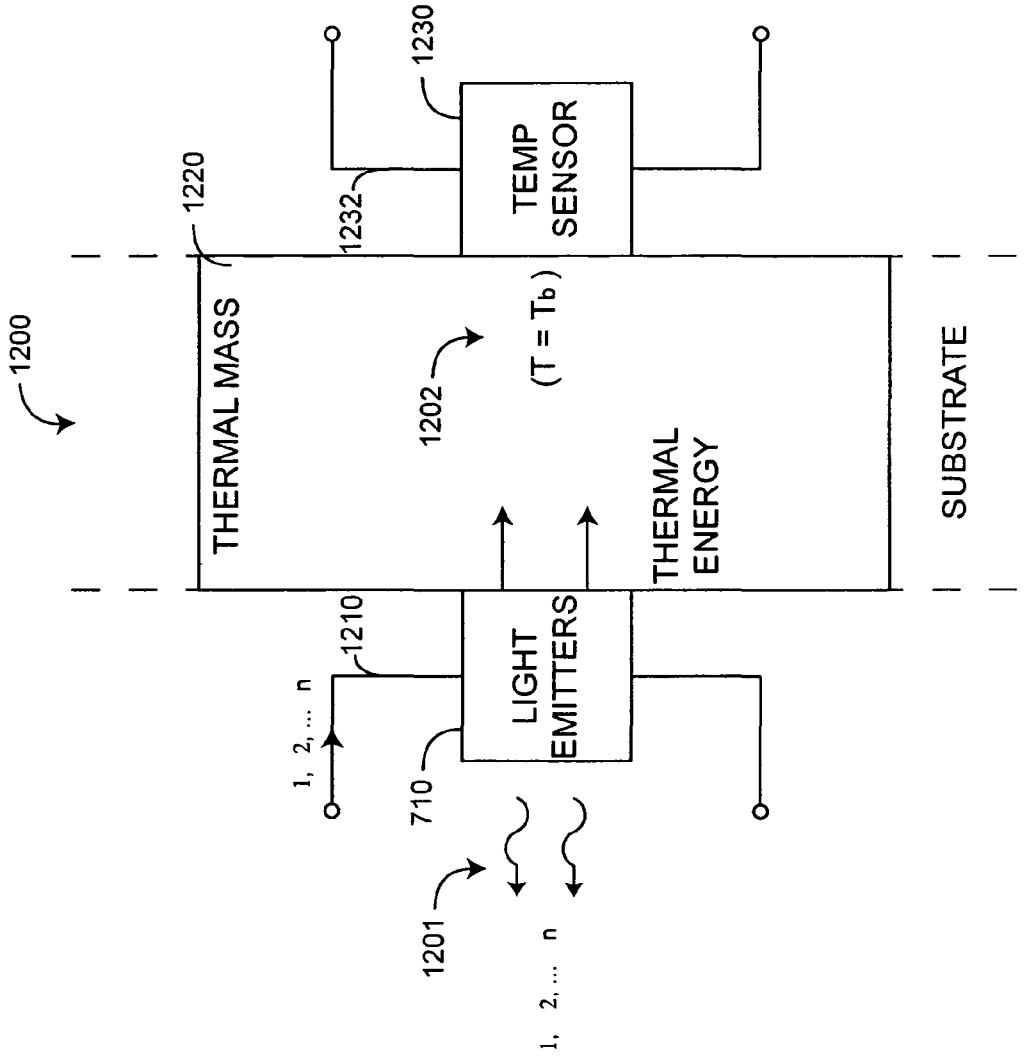
1200
THERMAL MASS
1220
1232
1230
TEMP SENSOR
1202
(T = Tb)
THERMAL ENERGY
SUBSTRATE
1210
1, 2, ... n
LIGHT EMITTERS
710
1201
1, 2, ... n

FIG. 12

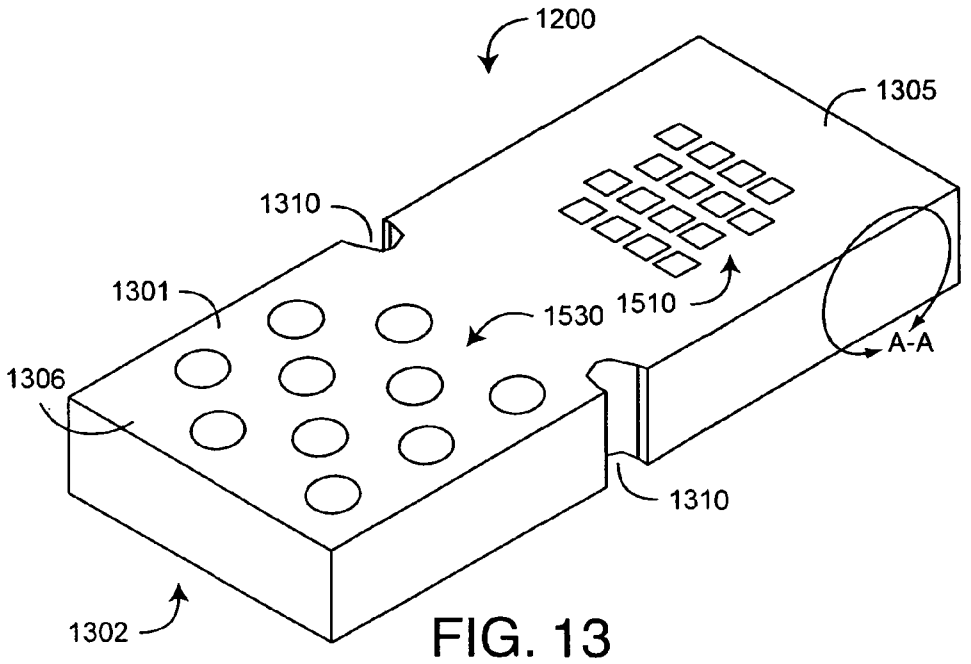
1200
1305
1310
1301
1530
1510
A-A
1306
1310
1302

FIG. 13

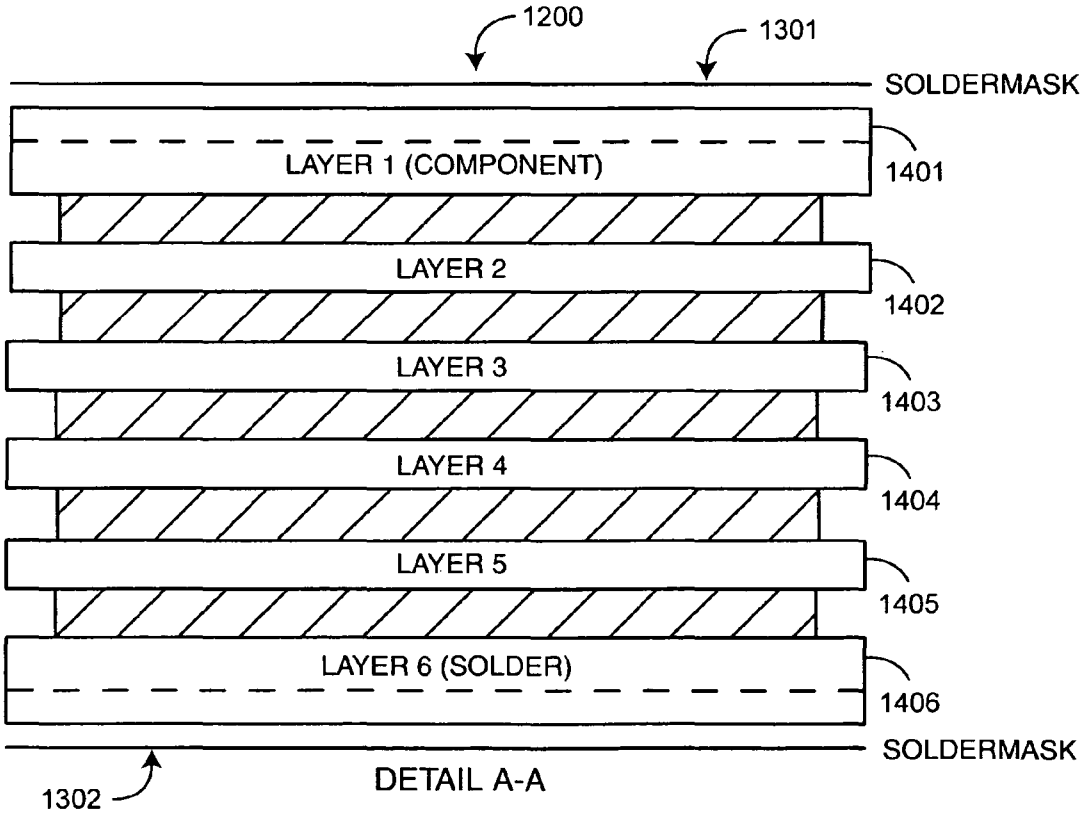
1200
1301
SOLDERMASK
LAYER 1 (COMPONENT)
1401
LAYER 2
1402
LAYER 3
1403
LAYER 4
1404
LAYER 5
1405
LAYER 6 (SOLDER)
1406
SOLDERMASK
1302
DETAIL A-A

FIG. 14

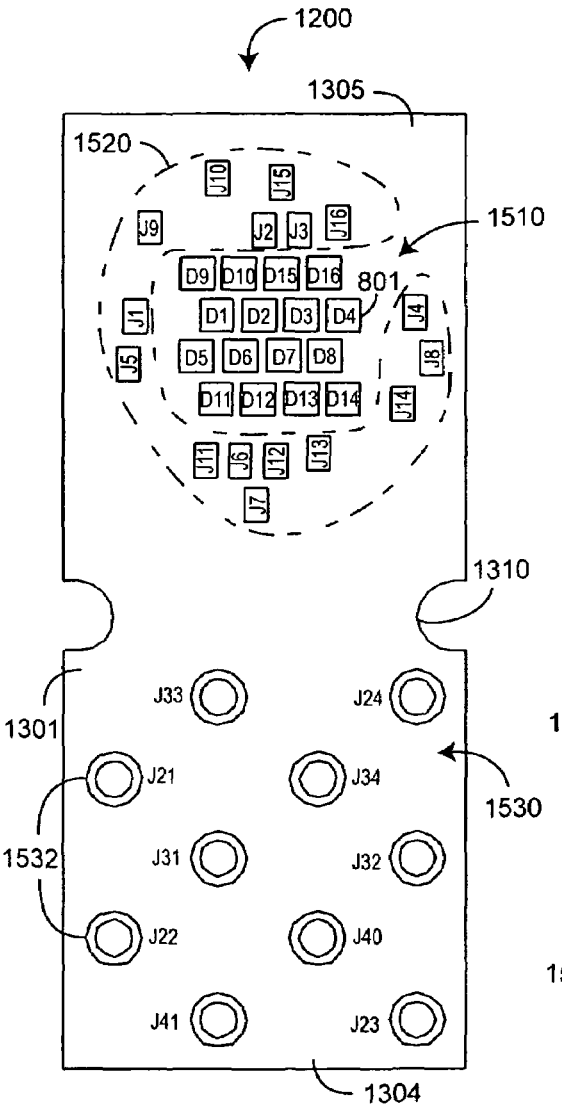
1200
1305
1520
1510
801
J10
J15
J9
J2
J3
J16
D9
D10
D15
D16
J1
D1
D2
D3
D4
J4
J5
D5
D6
D7
D8
J8
D11
D12
D13
D14
J14
J11
J6
J12
J13
J7
1310
1301
J33
J24
J21
J34
1530
1532
J31
J32
J22
J40
J41
J23
1304

FIG. 15

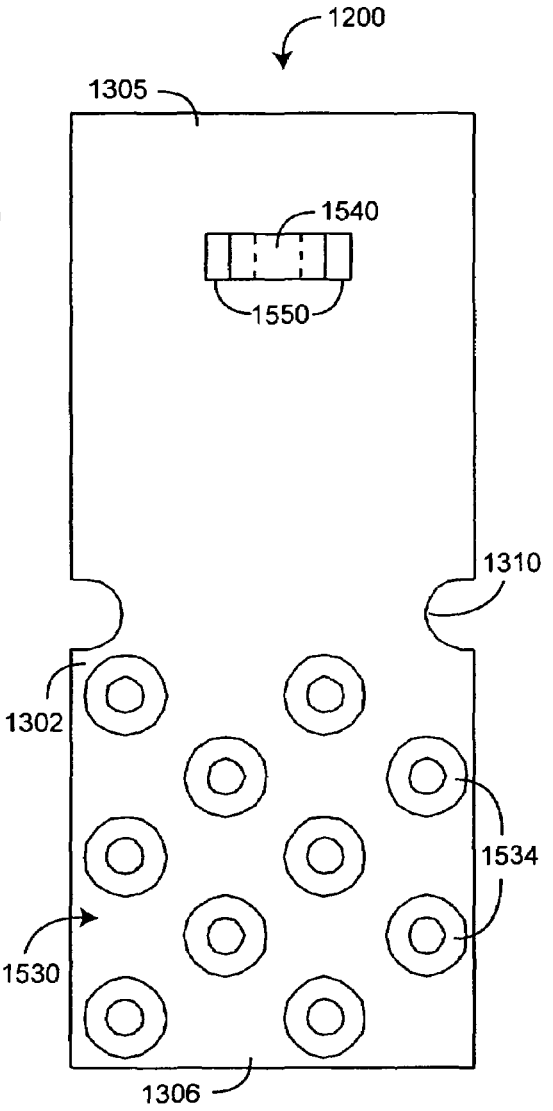
1200
1305
1540
1550
1310
1302
1534
1530
1306

FIG. 16

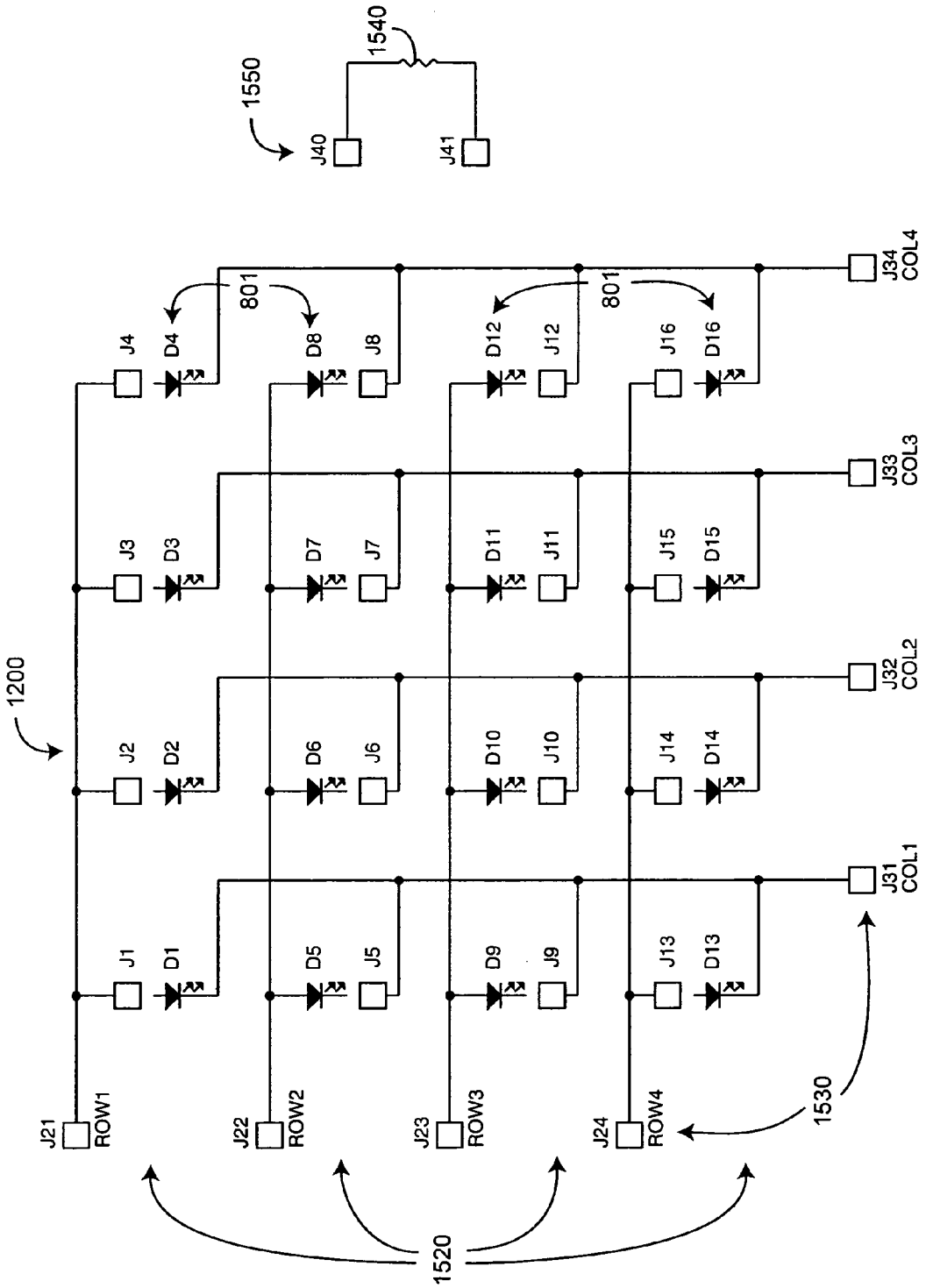
1550
J40
J41
1540
1200
801
801
J4
D4
D8
J8
D12
J12
J16
D16
J3
D3
D7
J7
D11
J11
J15
D15
J2
D2
D6
J6
D10
J10
J14
D14
J1
D1
D5
J5
D9
J9
J13
D13
J21
ROW1
J22
ROW2
J23
ROW3
J24
ROW4
1520
1530
J31
COL1
J32
COL2
J33
COL3
J34
COL4

FIG. 17

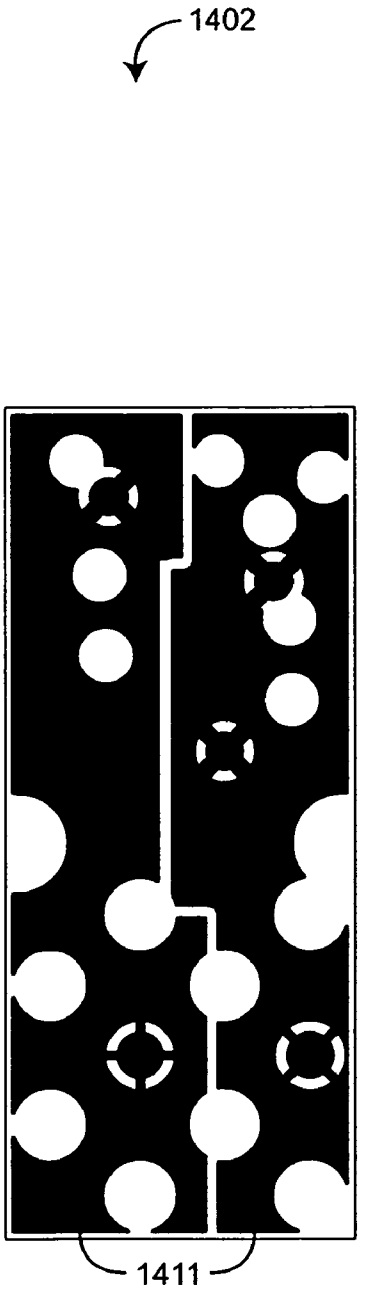

FIG. 18

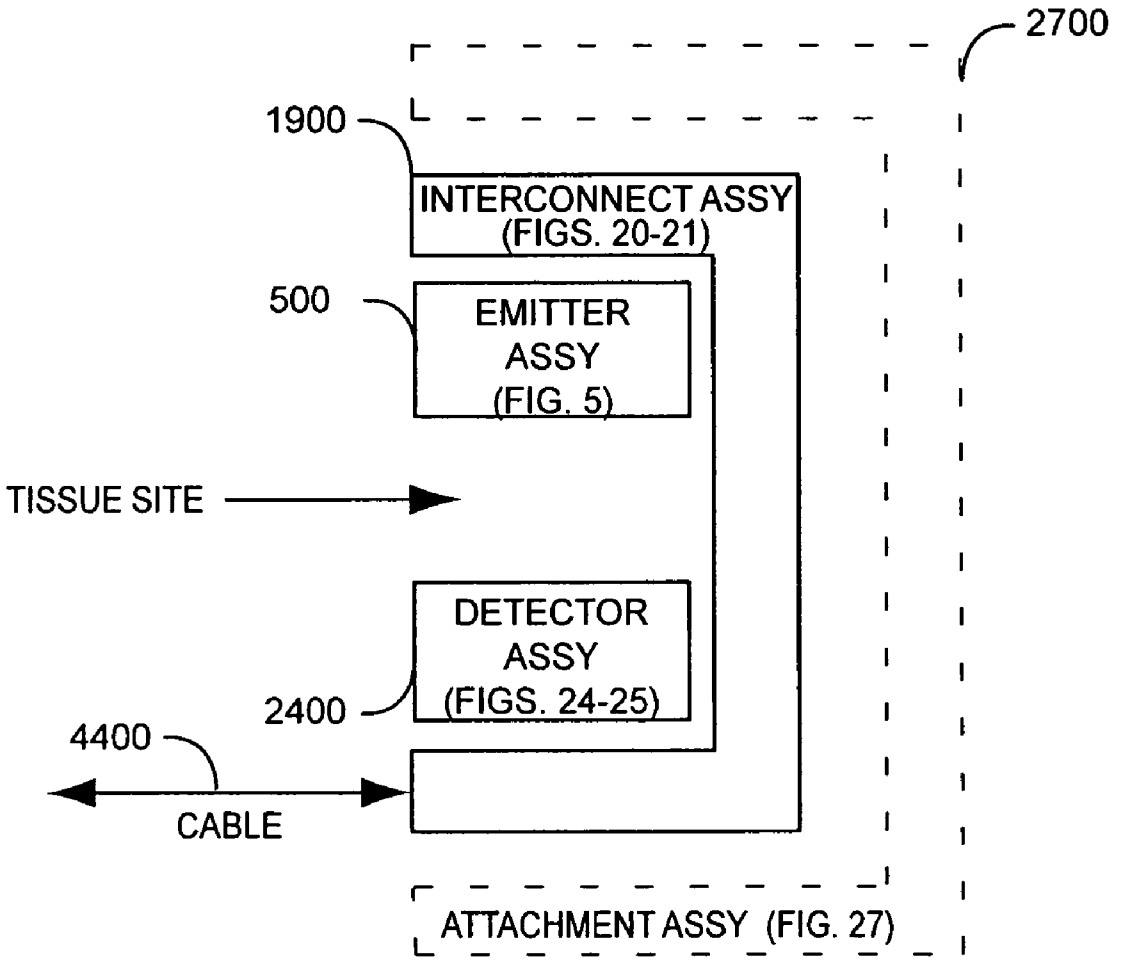
2700
1900
INTERCONNECT ASSY
(FIGS. 20-21)
500
EMITTER
ASSY
(FIG. 5)
TISSUE SITE
DETECTOR
ASSY
(FIGS. 24-25)
2400
4400
CABLE
ATTACHMENT ASSY (FIG. 27)

FIG. 19

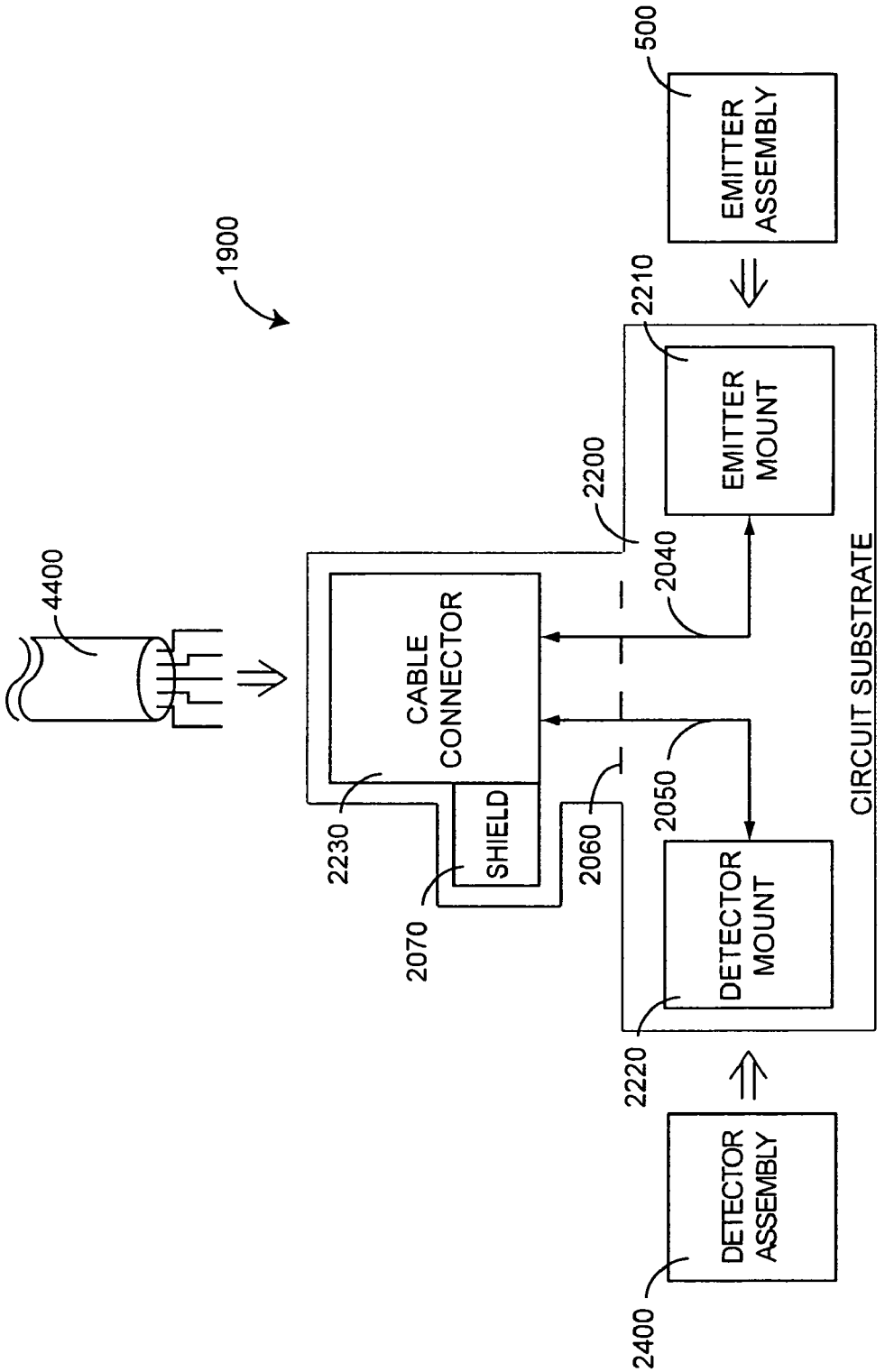
1900
4400
CABLE CONNECTOR
SHIELD
2230
2070
2200
2040
2060
2050
EMITTER MOUNT
DETECTOR MOUNT
2210
2220
CIRCUIT SUBSTRATE
EMITTER ASSEMBLY
DETECTOR ASSEMBLY
500
2400

FIG. 20

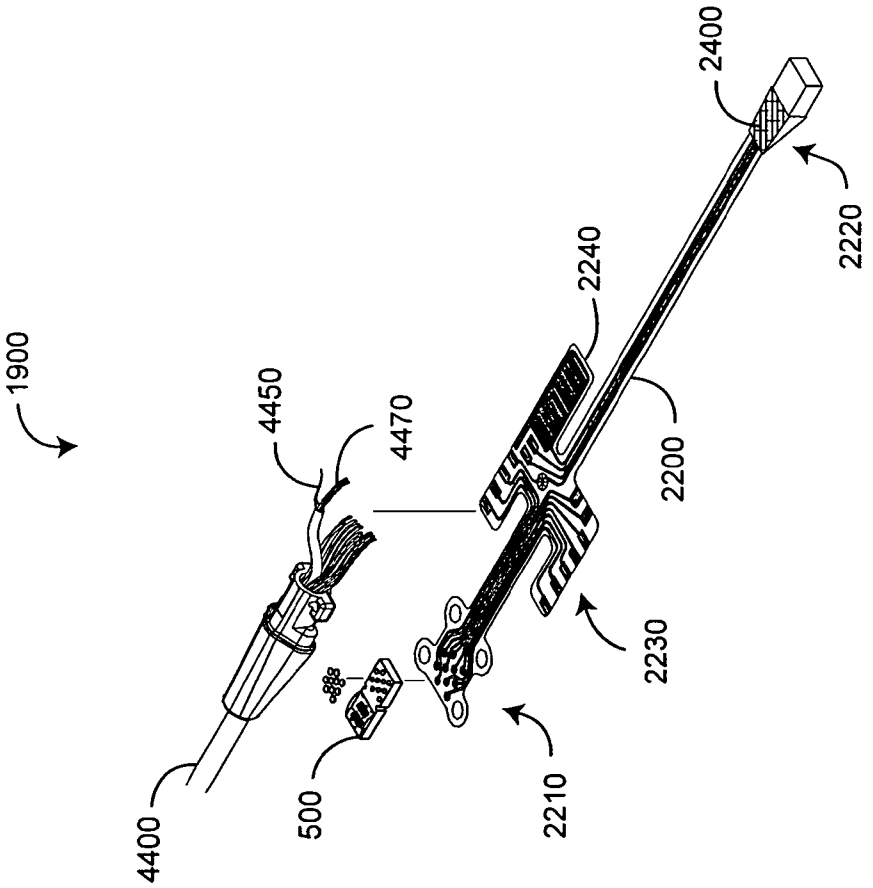

FIG. 21

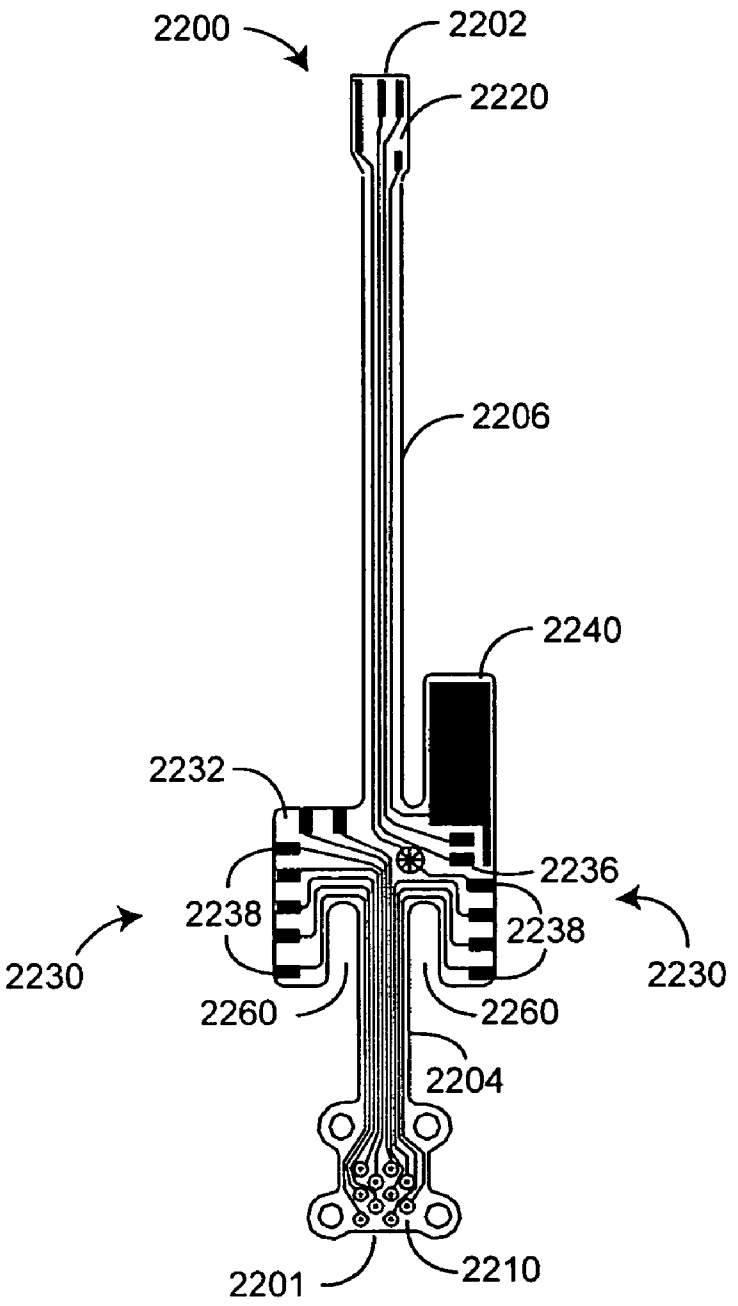
2200
2202
2220
2206
2240
2232
2236
2238
2238
2230
2230
2260
2260
2204
2201
2210

FIG. 22

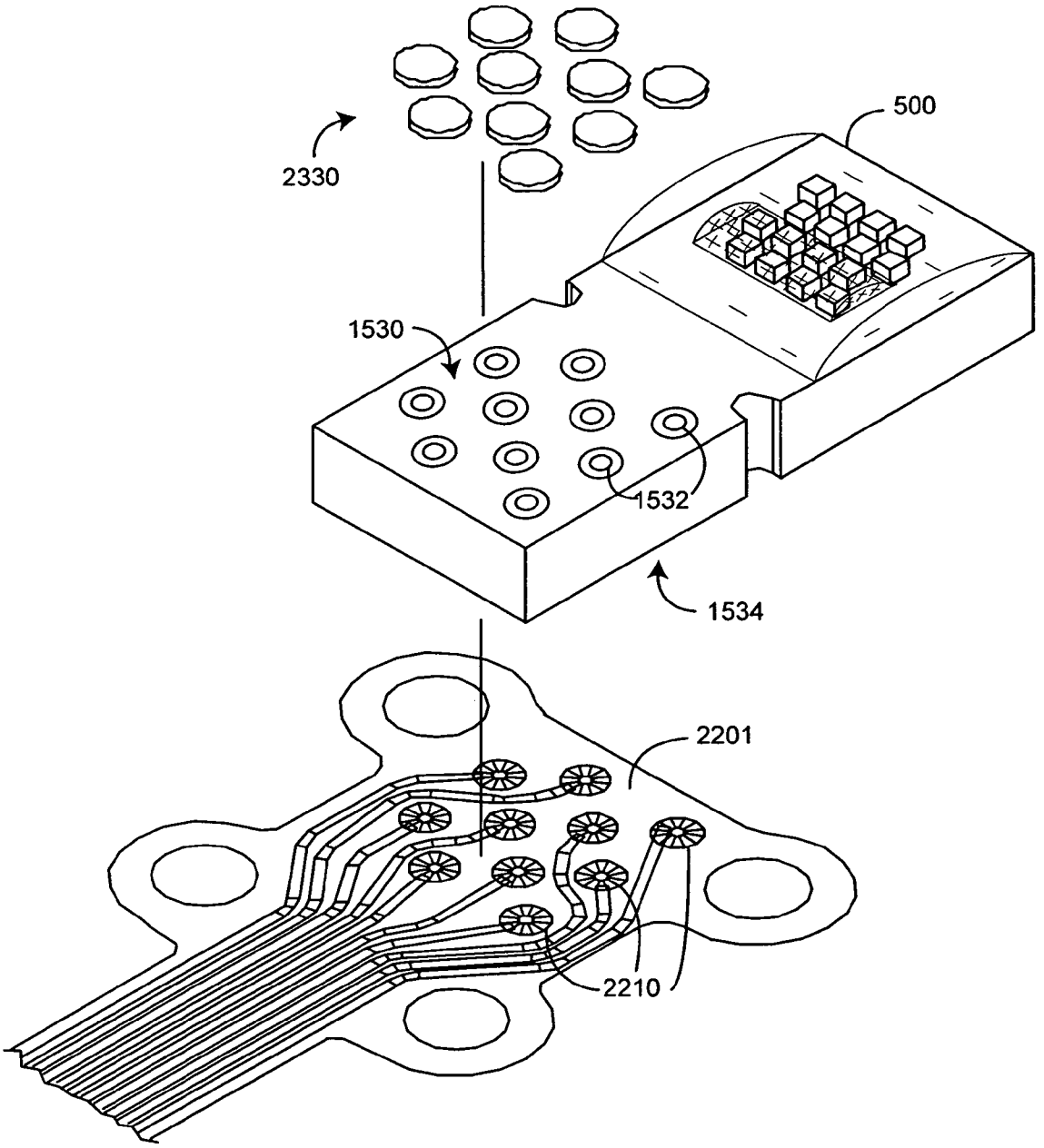

FIG. 23

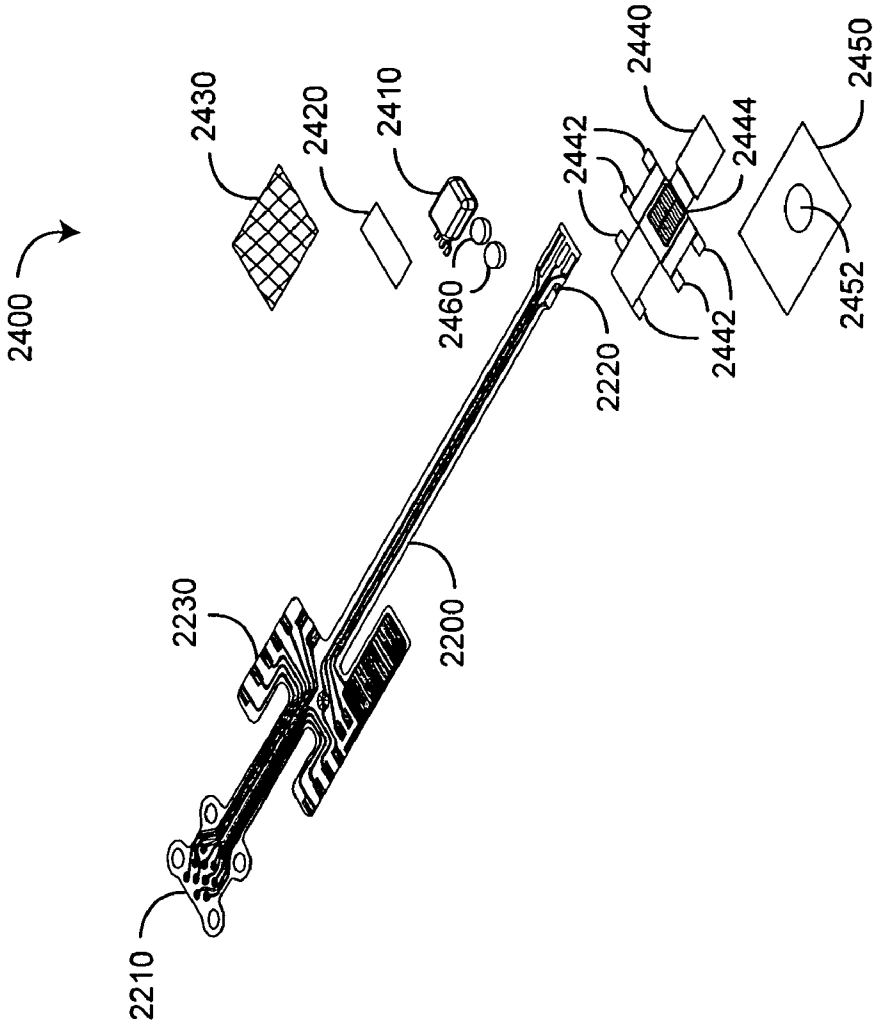
2400
2430
2420
2410
2460
2440
2442
2444
2450
2452
2442
2220
2230
2200
2210

FIG. 24

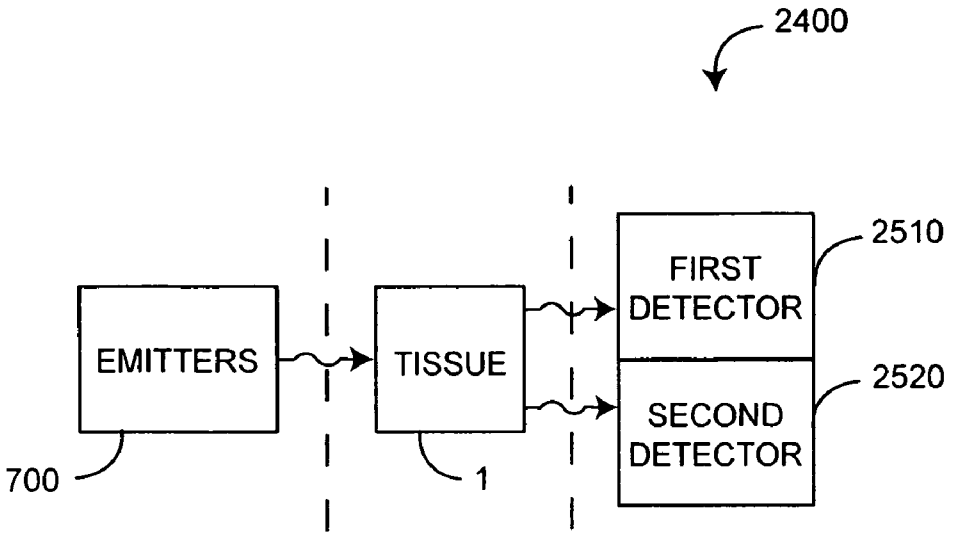
2400
EMITTERS
TISSUE
FIRST DETECTOR
SECOND DETECTOR
2510
2520
700
1

FIG. 25

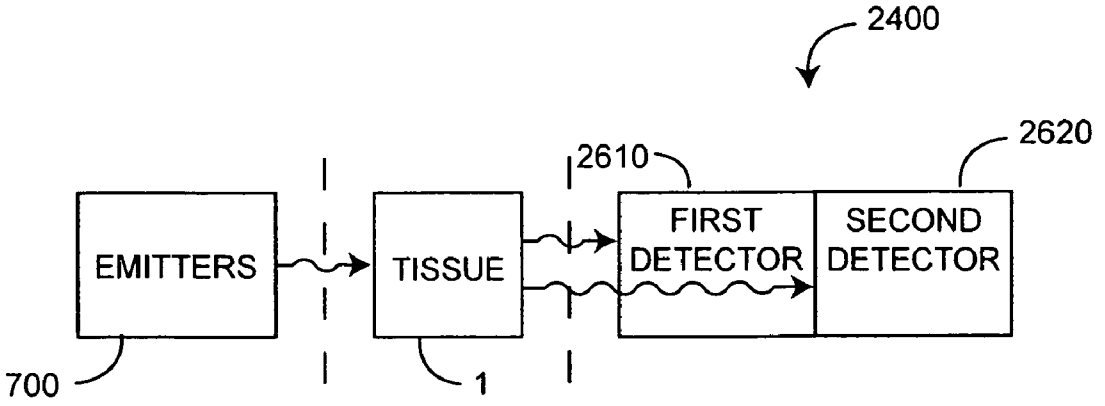
2400
2610
2620
EMITTERS
TISSUE
FIRST DETECTOR
SECOND DETECTOR
700
1

FIG. 26

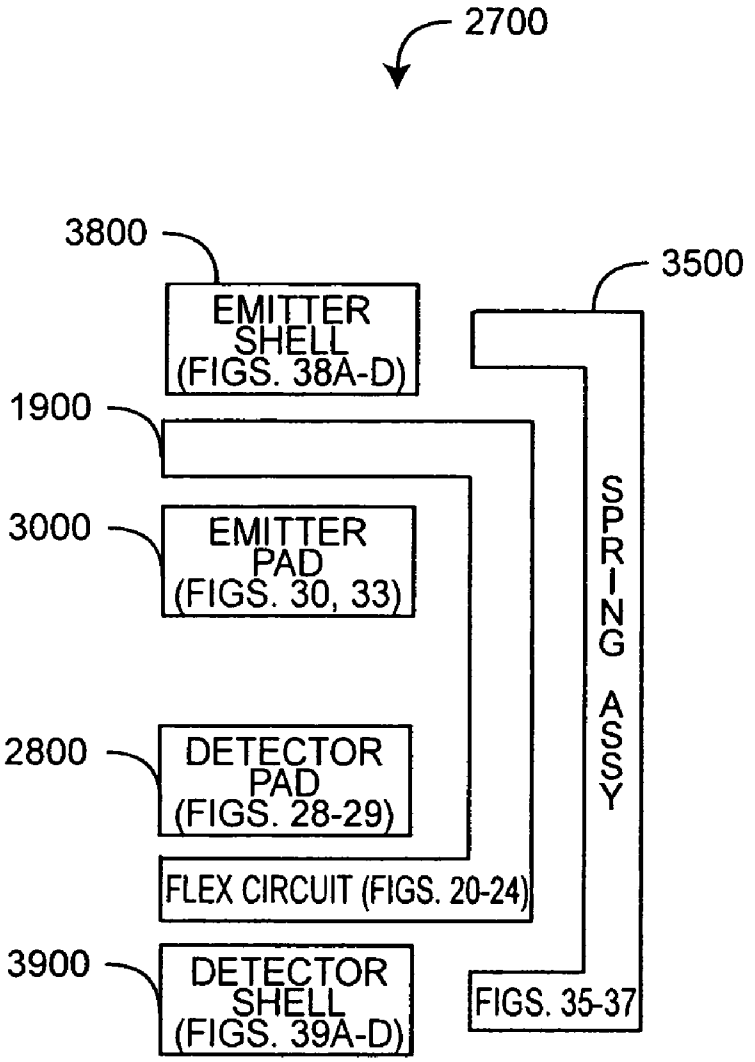
2700
3800
EMITTER SHELL (FIGS. 38A-D)
3500
1900
3000
EMITTER PAD (FIGS. 30, 33)
SPRING ASSY
2800
DETECTOR PAD (FIGS. 28-29)
FLEX CIRCUIT (FIGS. 20-24)
3900
DETECTOR SHELL (FIGS. 39A-D)
FIGS. 35-37

FIG. 27

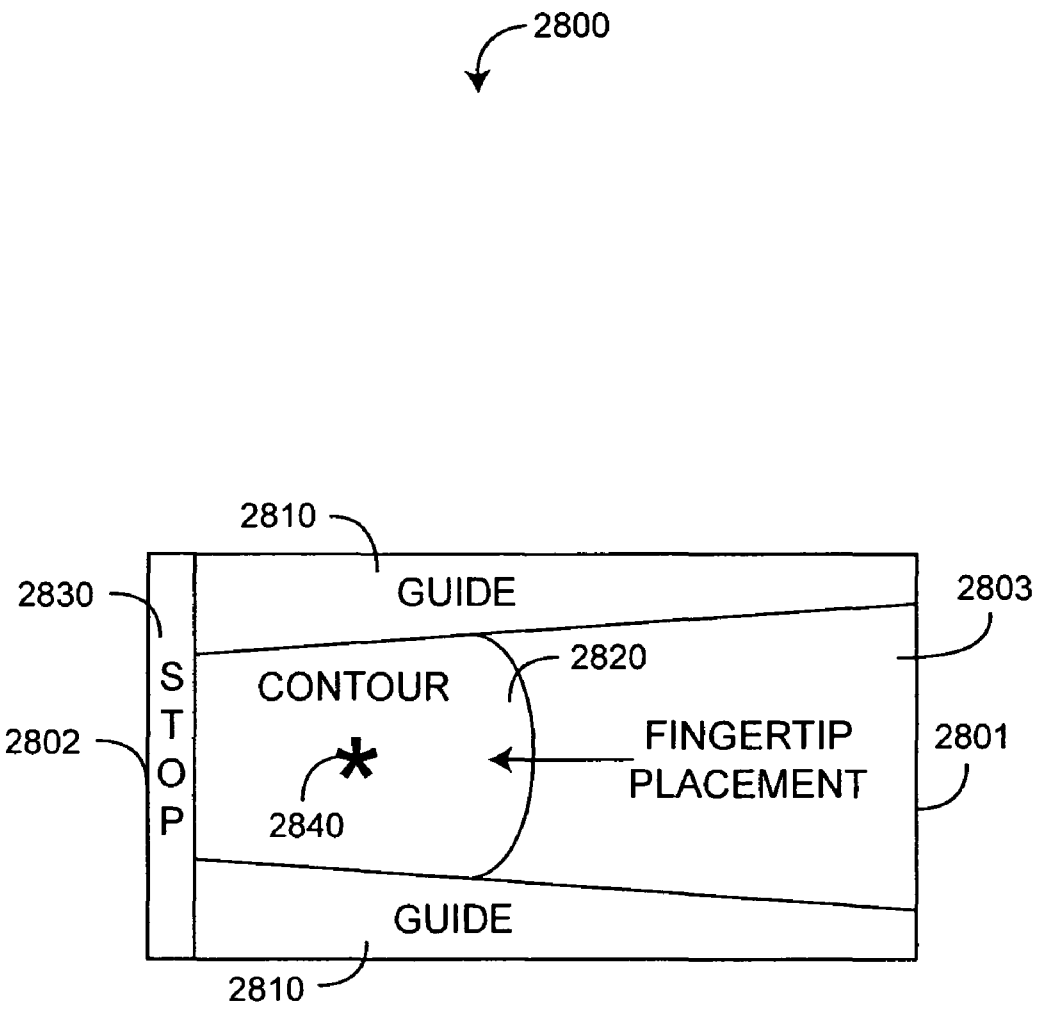
2800
2810
GUIDE
2830
2803
2820
CONTOUR
S
T
O
P
2802
FINGERTIP
PLACEMENT
2801
2840
GUIDE
2810

FIG. 28

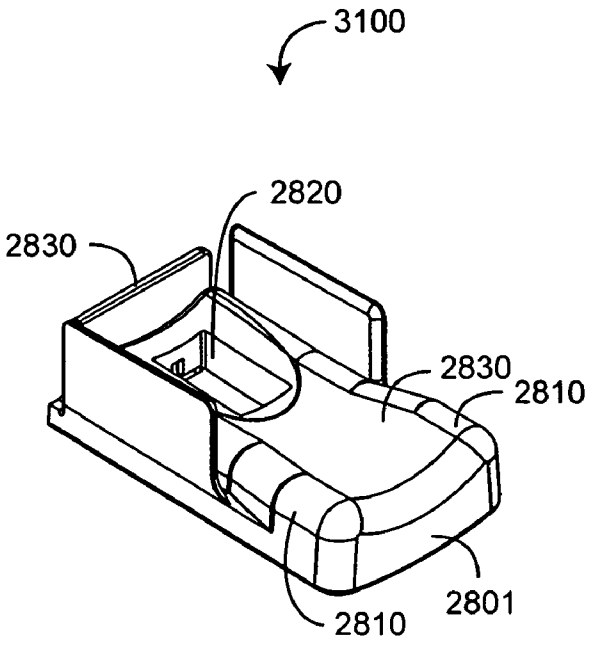

FIG. 29A

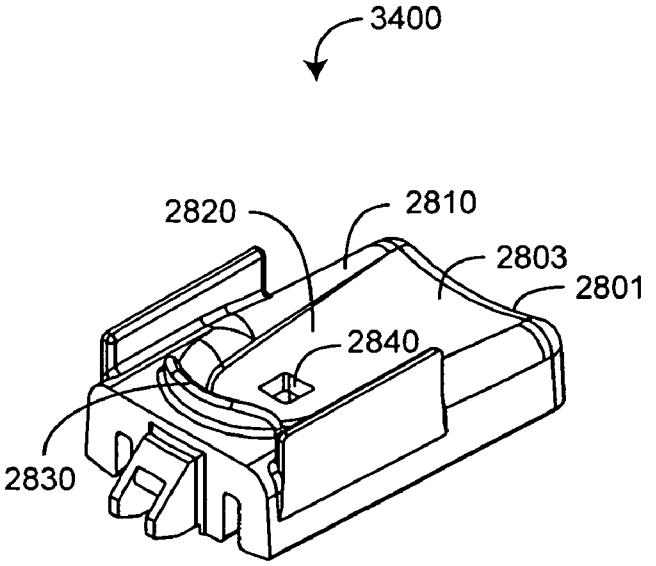

FIG. 29B

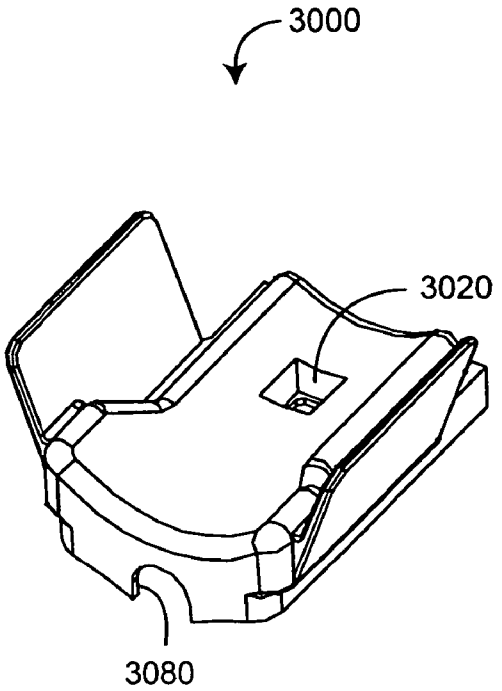

FIG. 30A

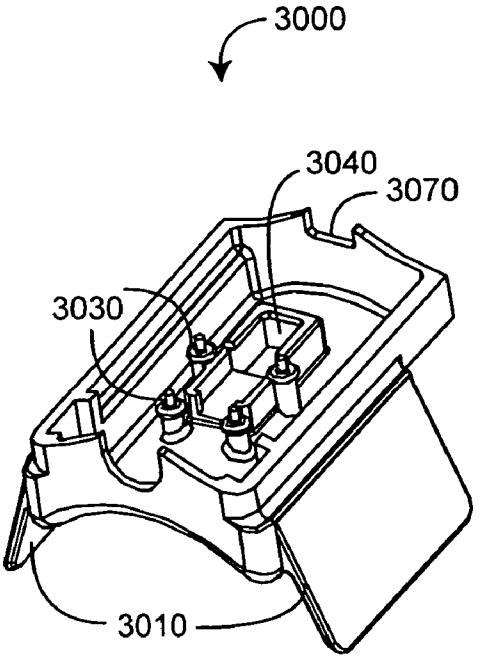

FIG. 30B

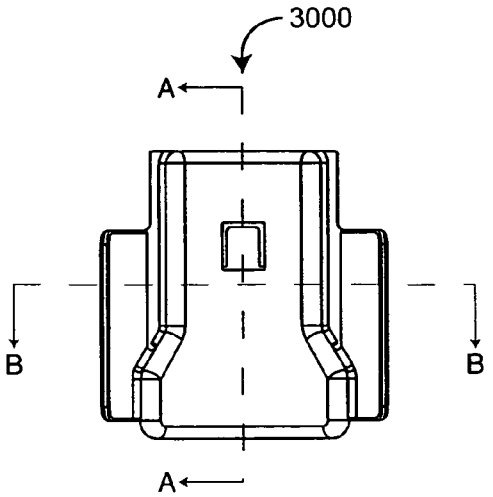

FIG. 30C

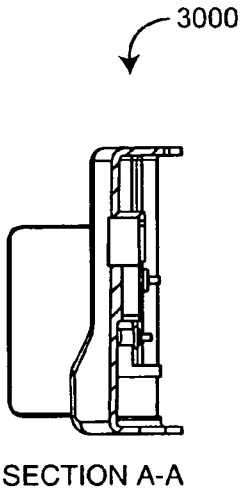

FIG. 30F

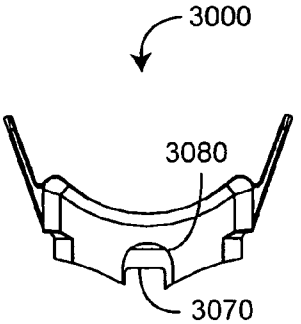

FIG. 30D

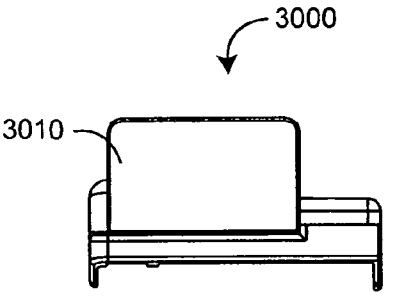

FIG. 30G

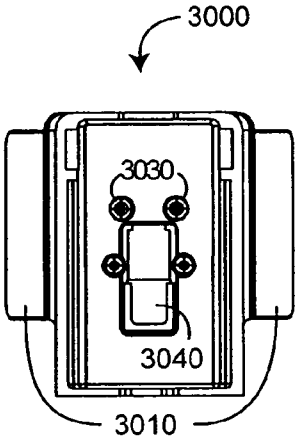

FIG. 30E

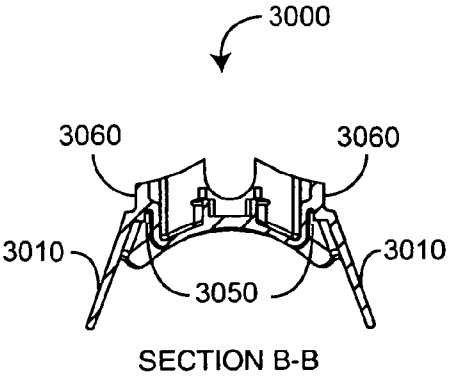

FIG. 30H

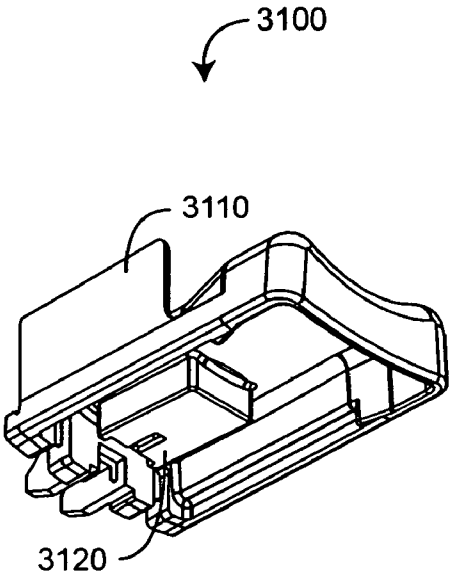

FIG. 31A

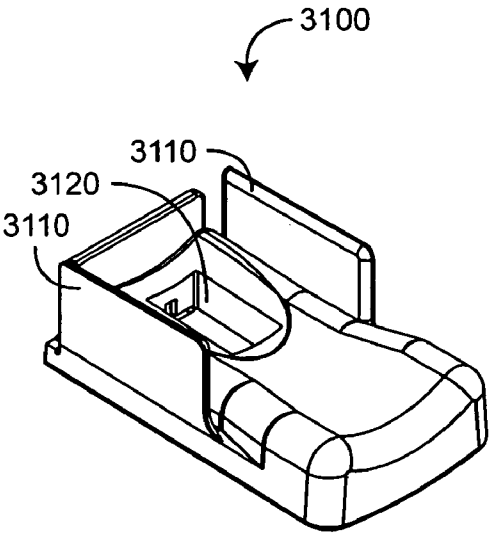

FIG. 31B

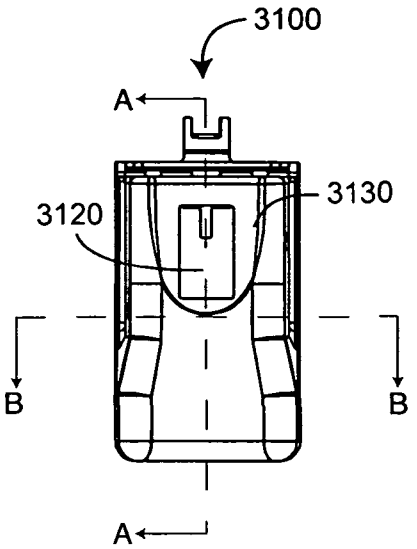

FIG. 31C

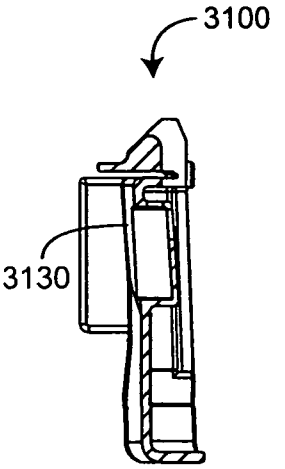

SECTION A-A

FIG. 31F

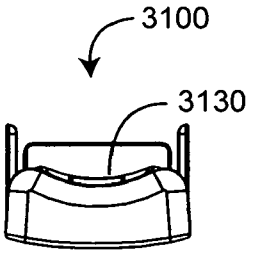

FIG. 31D

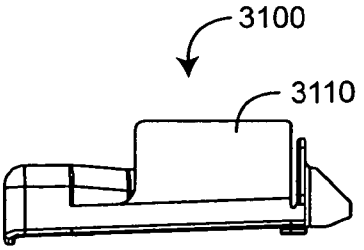

FIG. 31G

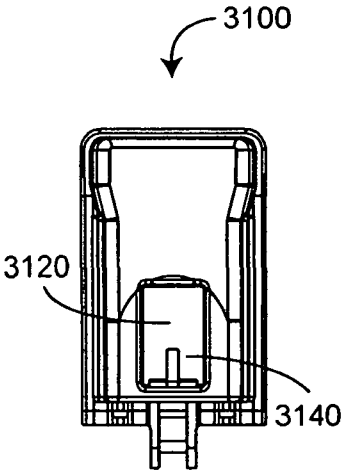

FIG. 31E

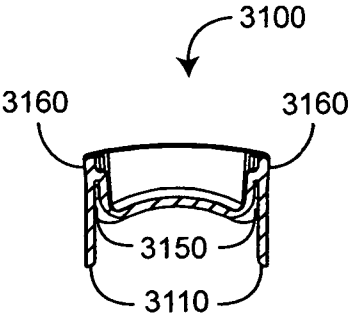

SECTION B-B

FIG. 31H

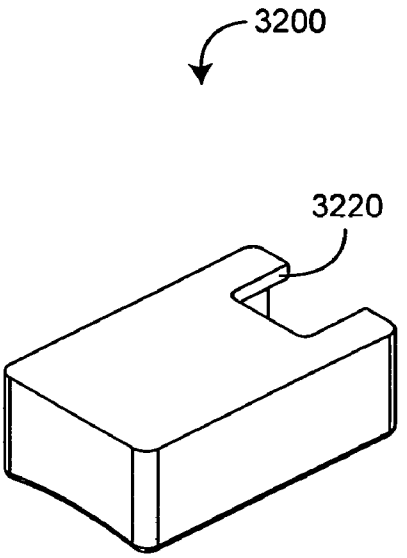

FIG. 32A

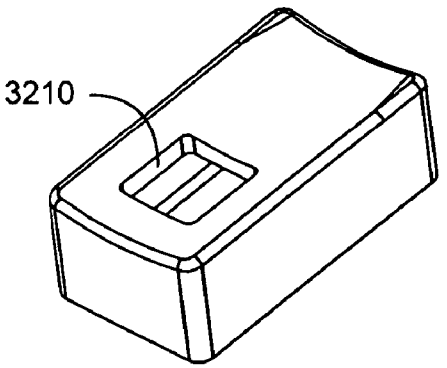

FIG. 32B

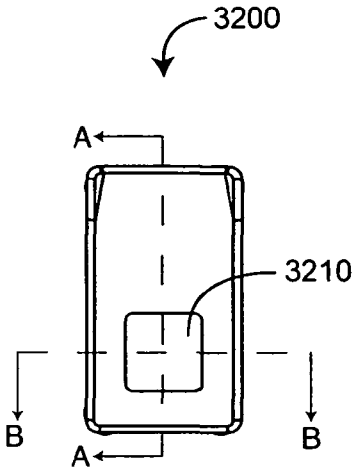

FIG. 32C

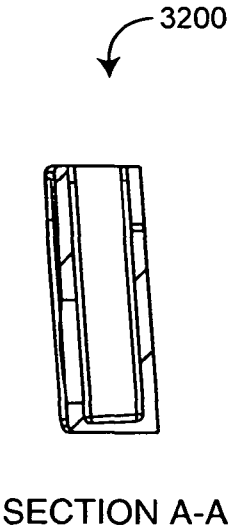

FIG. 32F

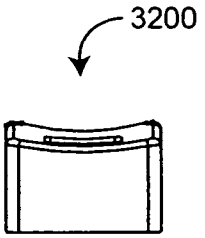

FIG. 32D

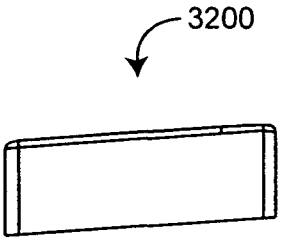

FIG. 32G

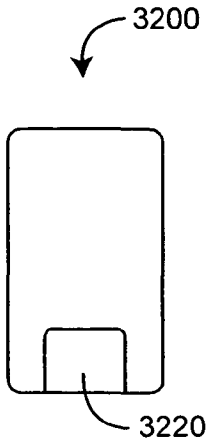

FIG. 32E

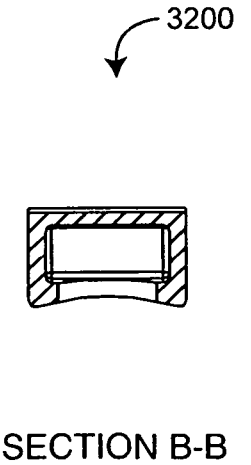

FIG. 32H

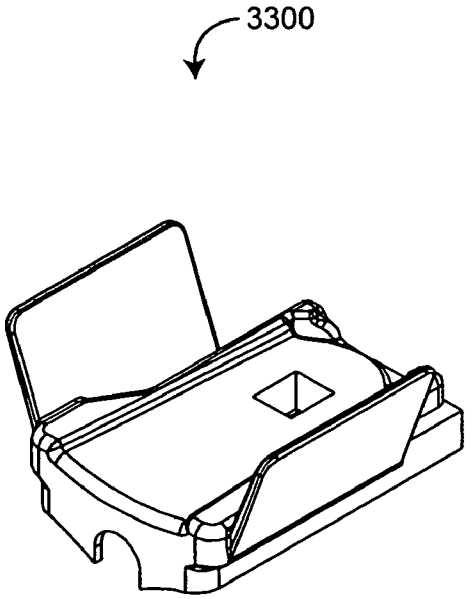

FIG. 33A

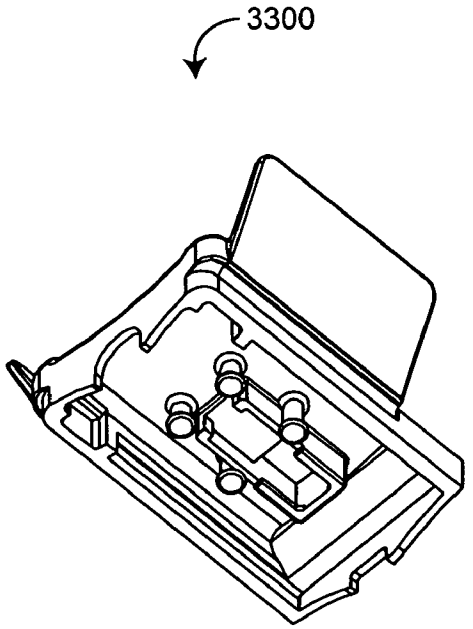

FIG. 33B

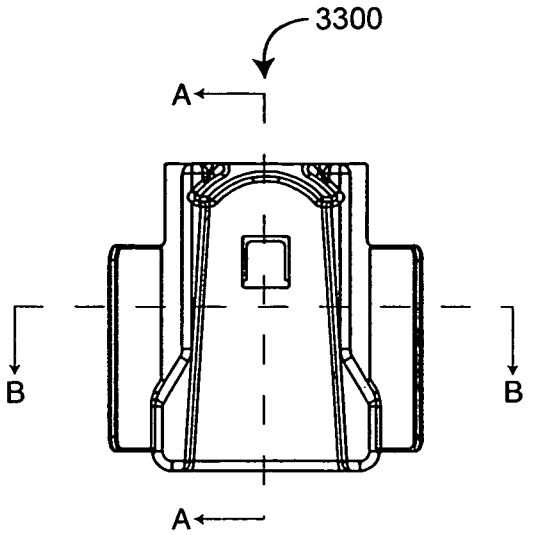

FIG. 33C

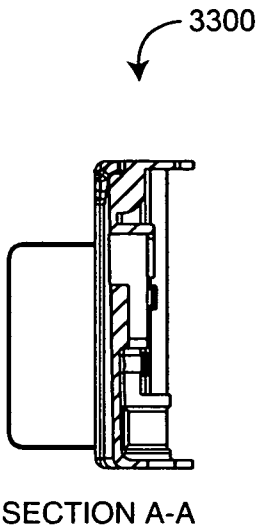

FIG. 33F

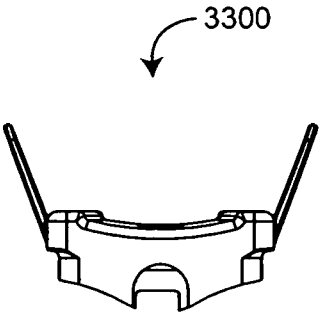

FIG. 33D

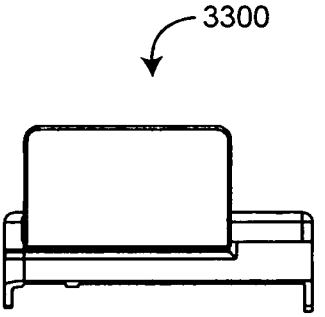

FIG. 33G

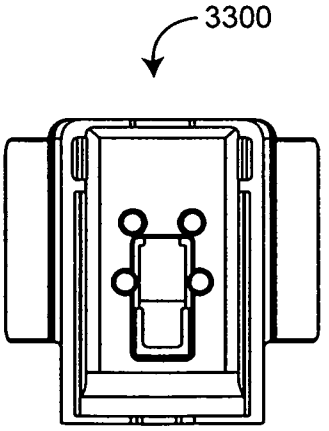

FIG. 33E

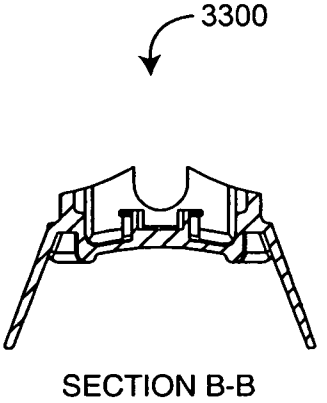

FIG. 33H

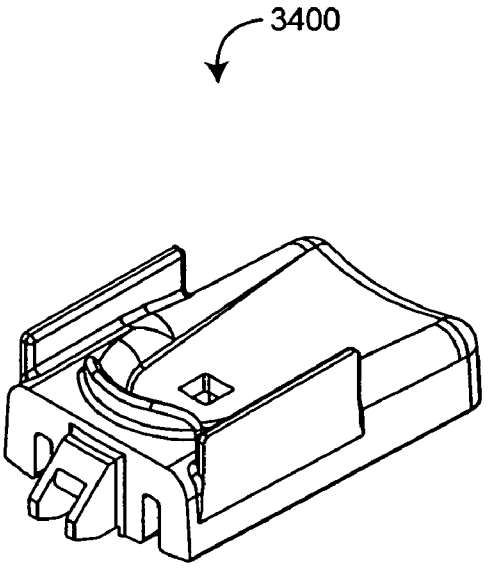

FIG. 34A

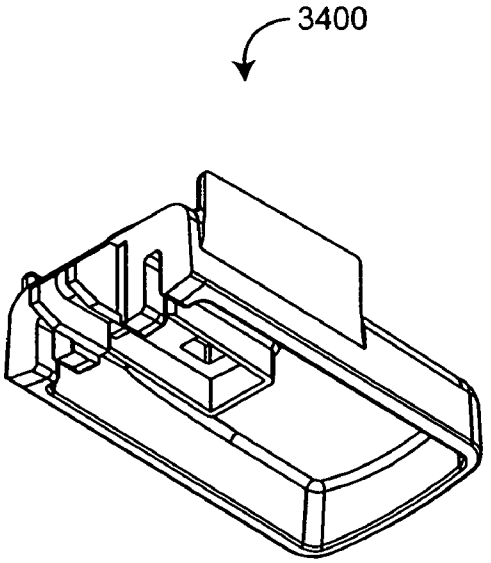

FIG. 34B

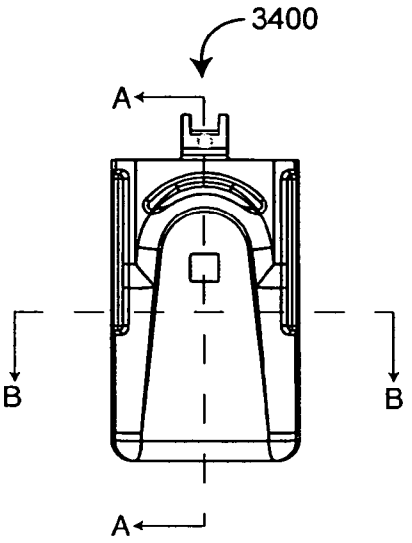

FIG. 34C

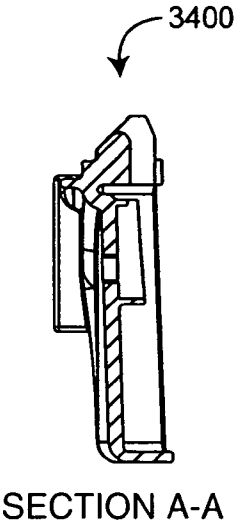

FIG. 34F

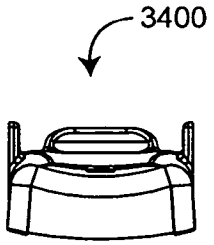

FIG. 34D

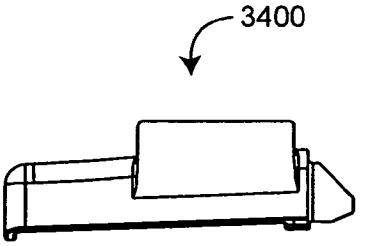

FIG. 34G

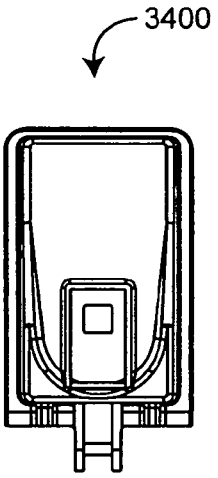

FIG. 34E

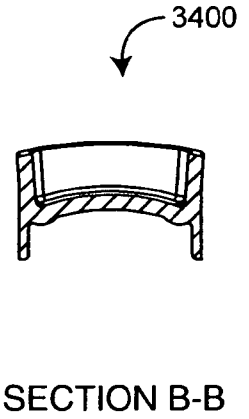

FIG. 34H

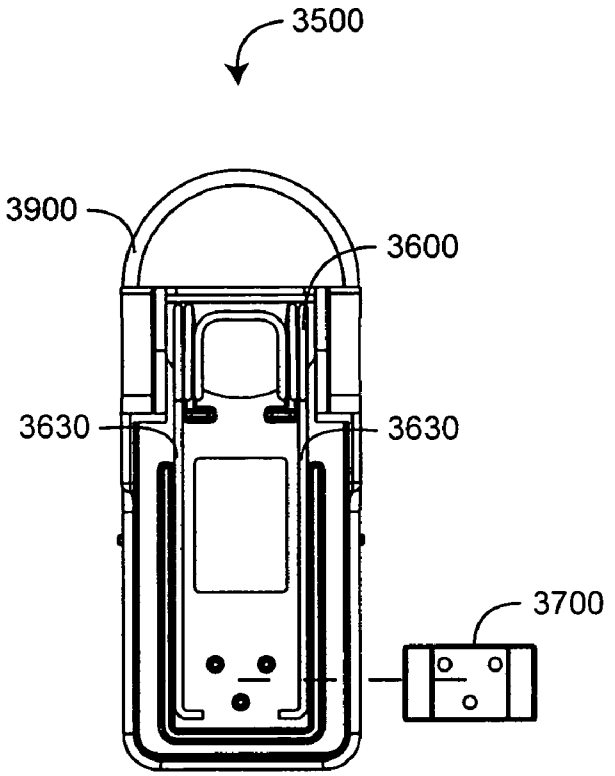

FIG. 35A

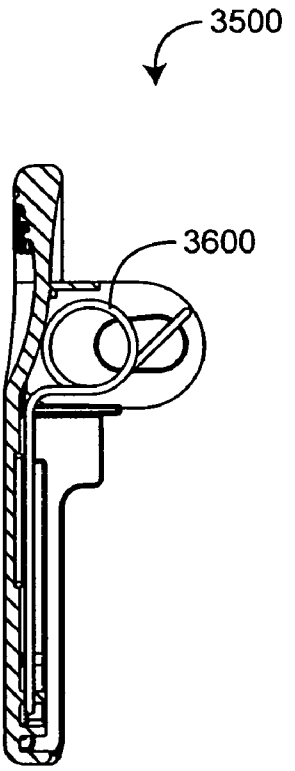

FIG. 35B

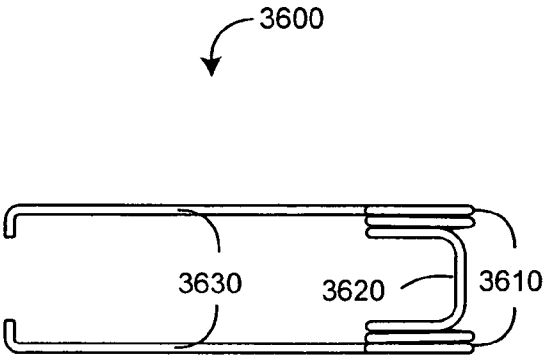

FIG. 36A

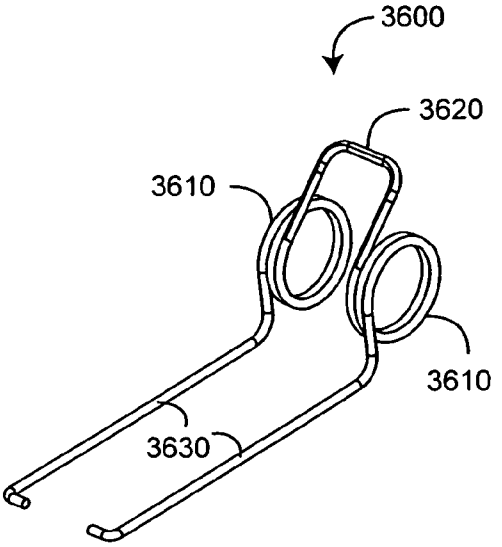

FIG. 36B

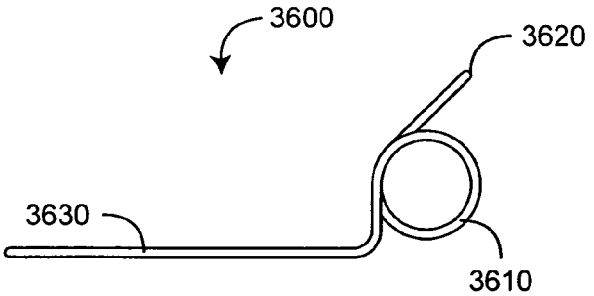

FIG. 36C

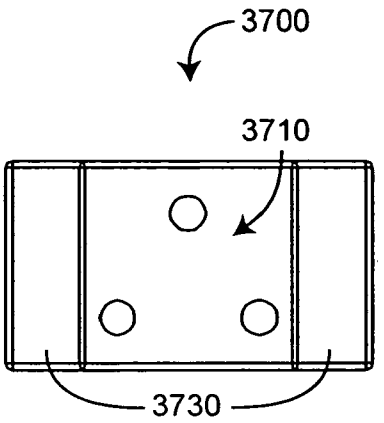

FIG. 37A

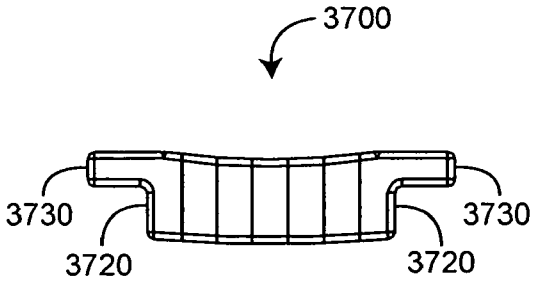

FIG. 37B

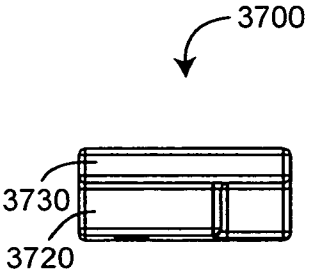

FIG. 37D

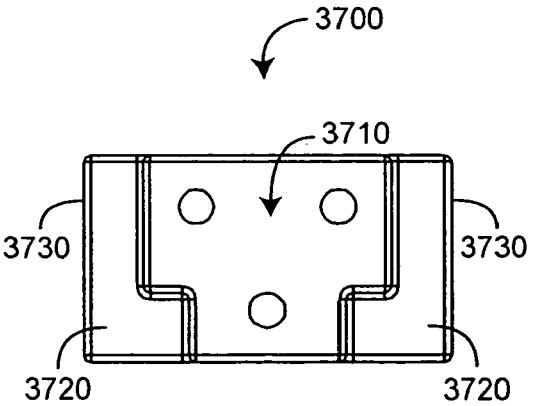

FIG. 37C

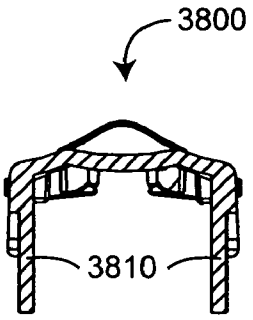

SECTION B-B

FIG. 38A

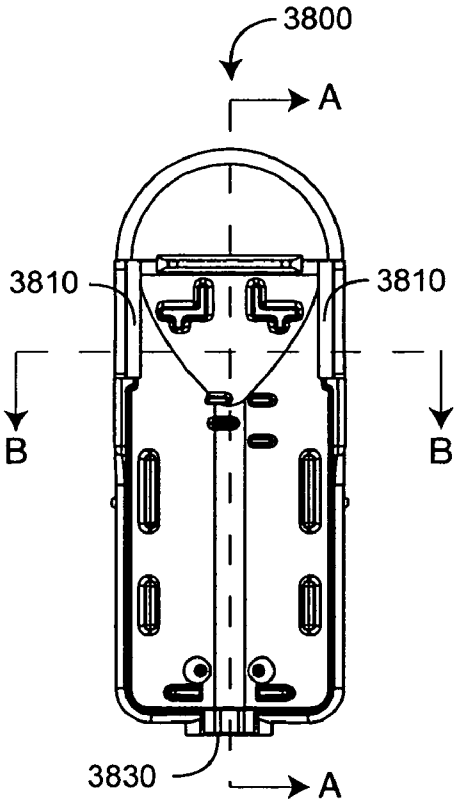

FIG. 38B

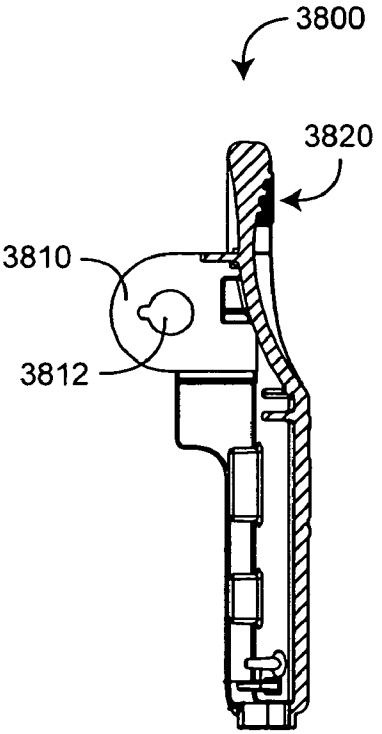

SECTION A-A

FIG. 38D

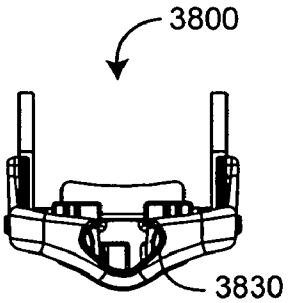

FIG. 38C

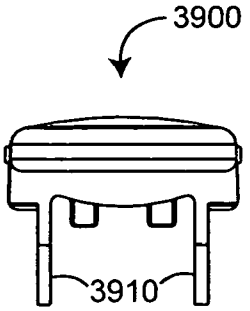

FIG. 39A

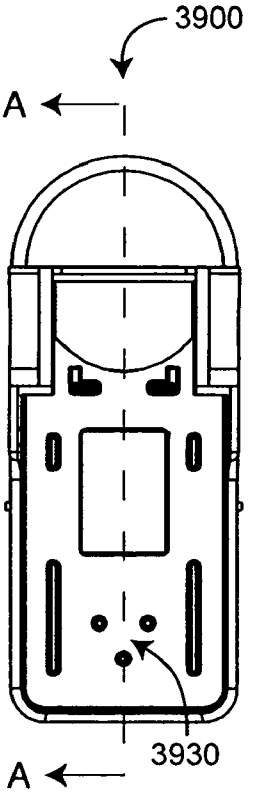

FIG.39B

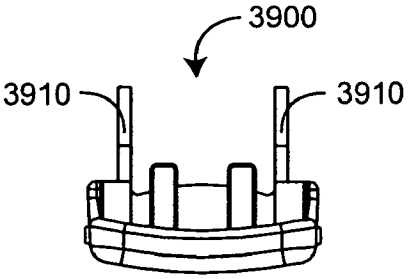

FIG. 39C

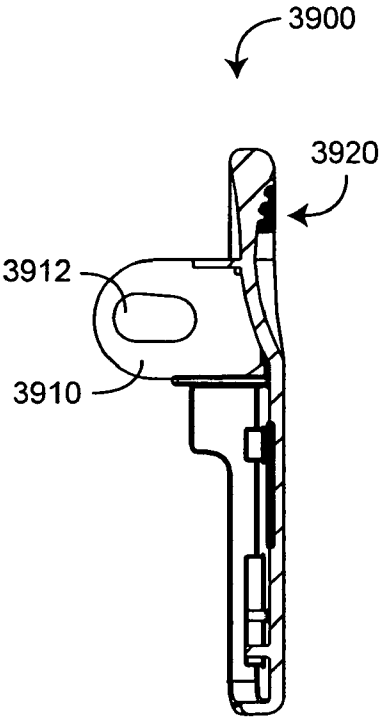

SECTION A-A

FIG. 39D

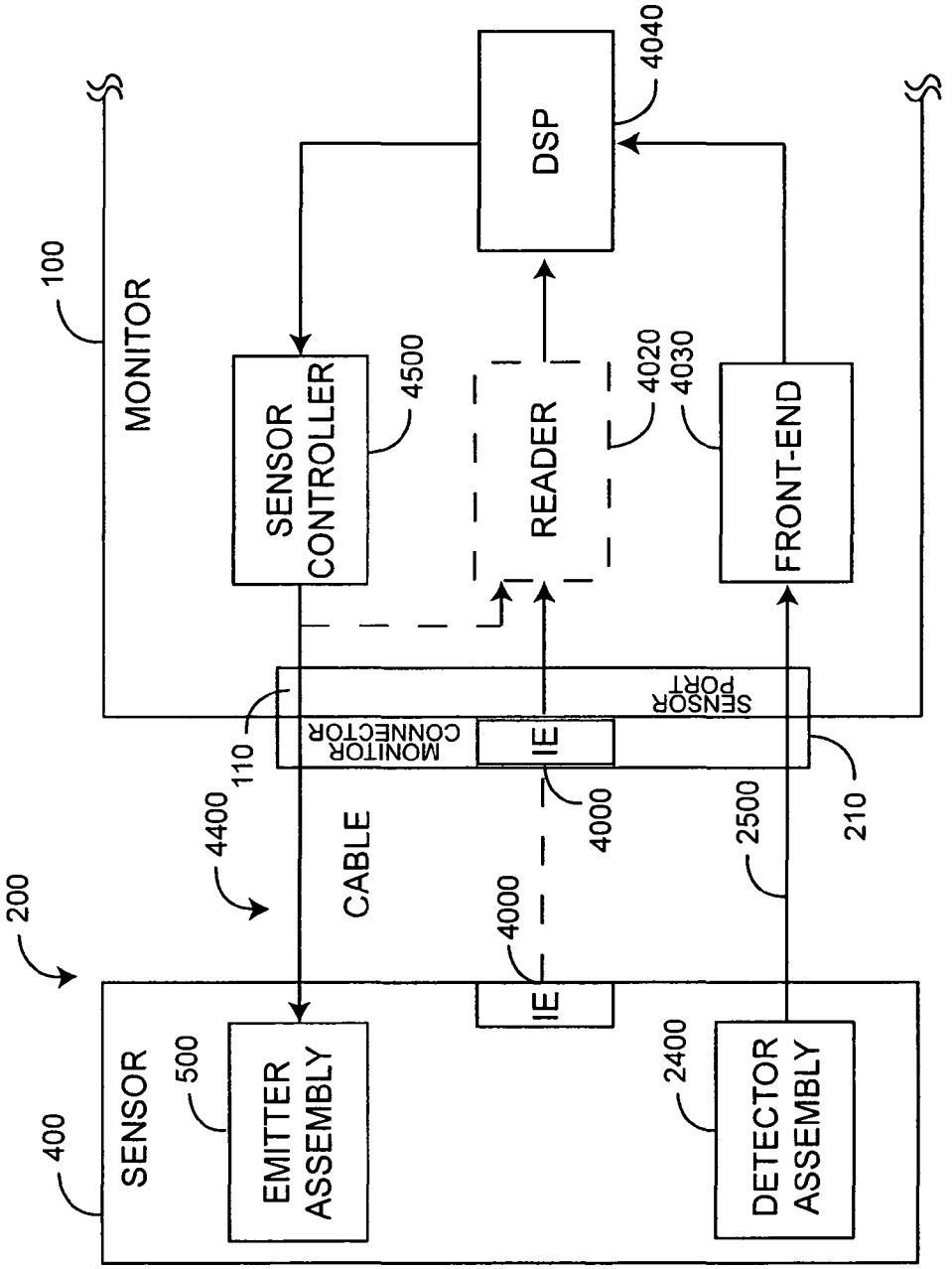
100
MONITOR
DSP
4040
SENSOR CONTROLLER
4500
READER
4020
4030
FRONT-END
110
MONITOR CONNECTOR
IE
SENSOR PORT
210
4400
CABLE
4000
2500
200
4000
IE
SENSOR
400
500
EMITTER ASSEMBLY
2400
DETECTOR ASSEMBLY

FIG. 40

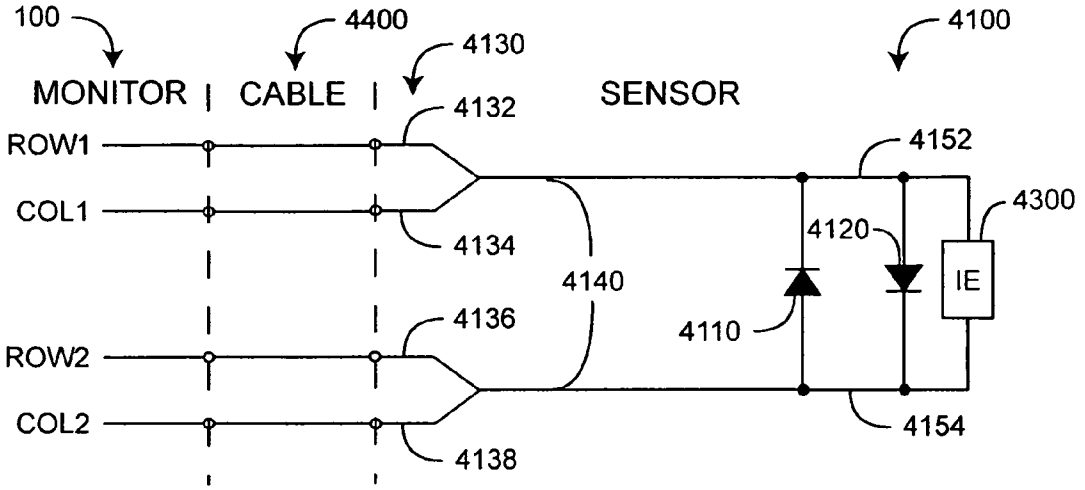

FIG. 41A

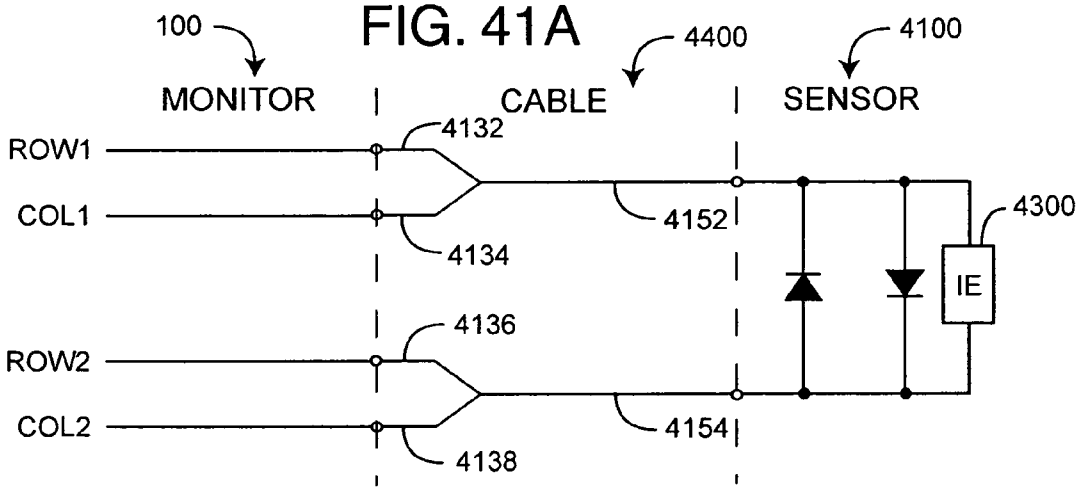

FIG. 41B

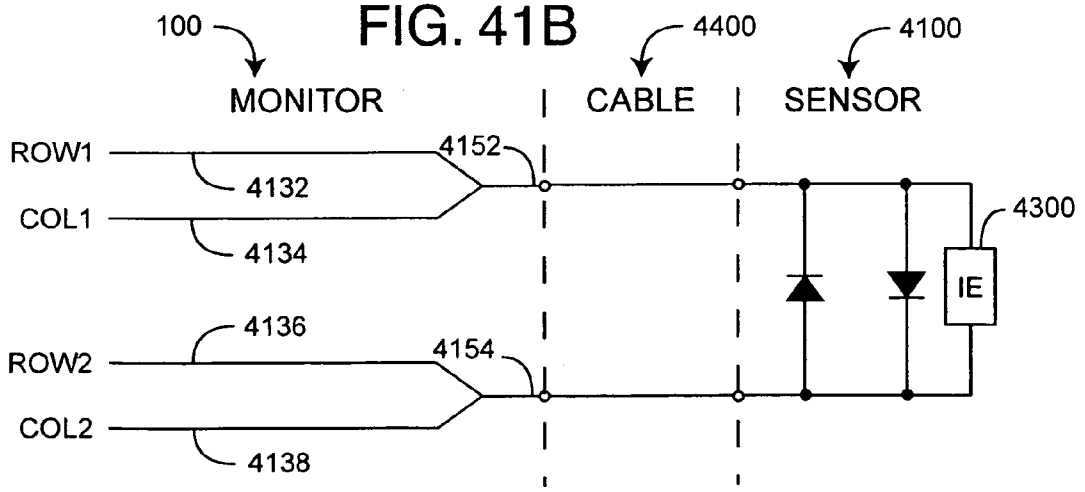

FIG. 41C

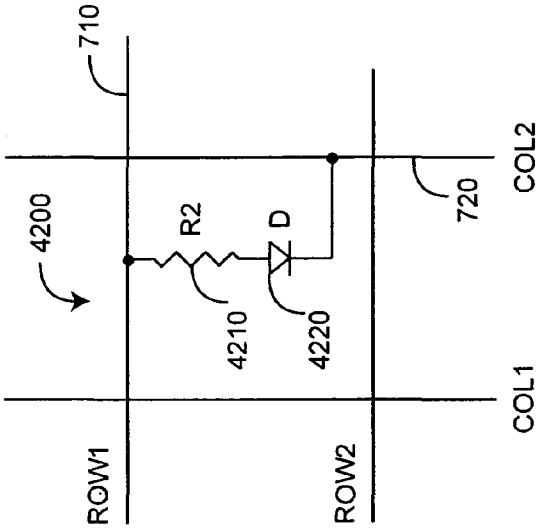

FIG. 42

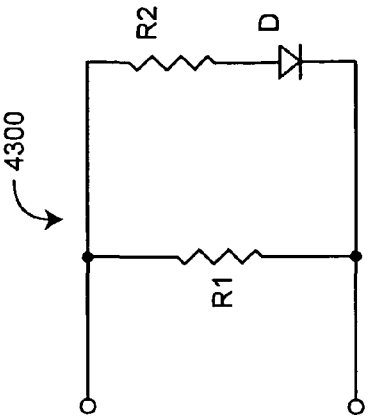

FIG. 43C

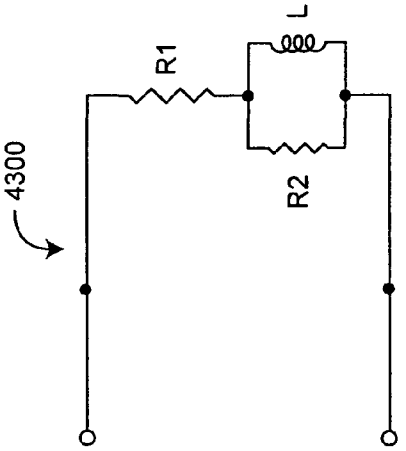

FIG. 43B

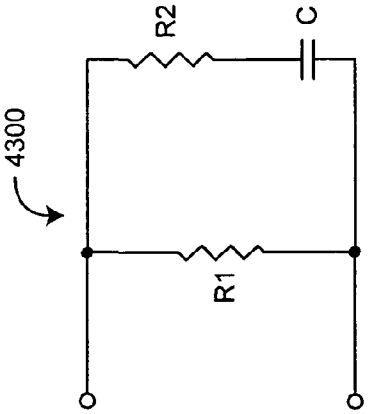

FIG. 43A

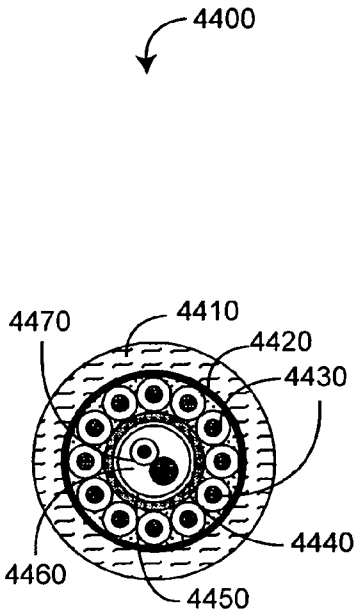

FIG. 44A

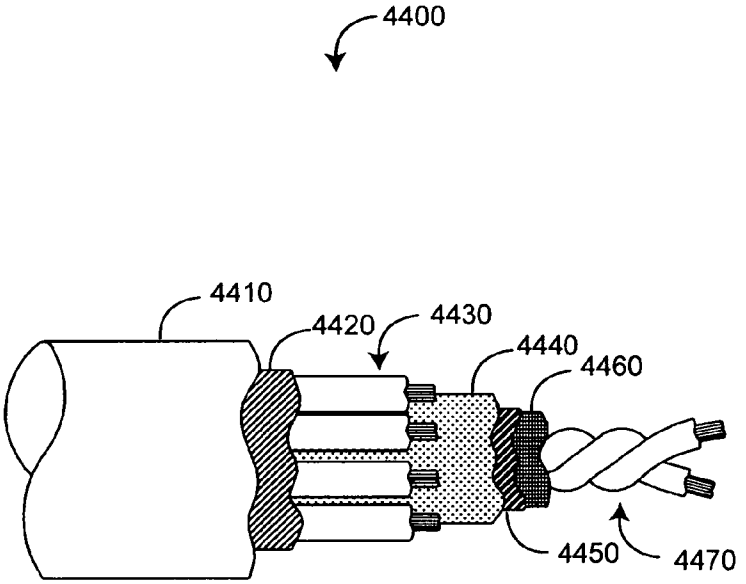

FIG. 44B

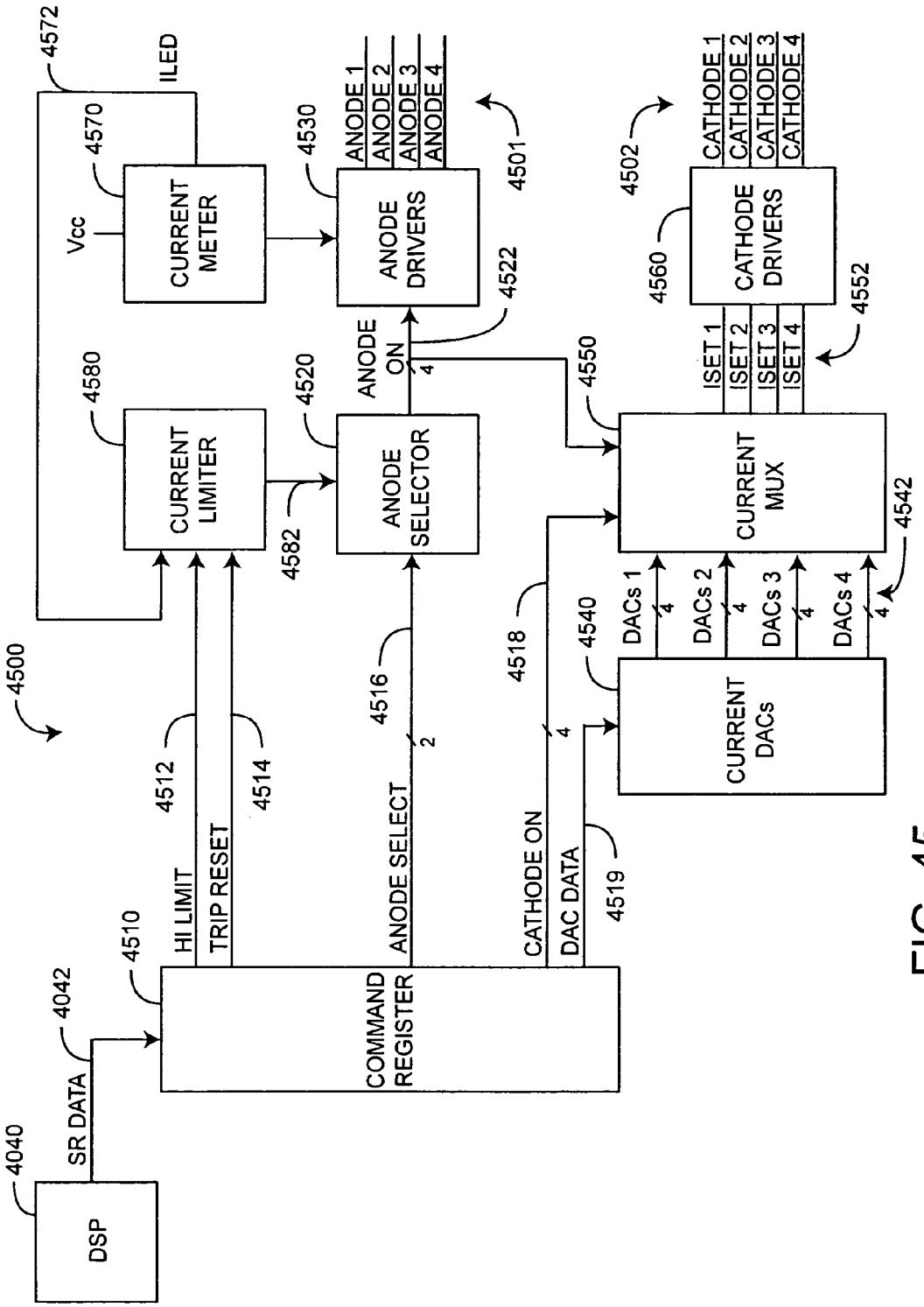
4572
ILED
4570
Vcc
CURRENT METER
4530
ANODE 1
ANODE 2
ANODE 3
ANODE 4
ANODE DRIVERS
4501
4502
CATHODE 1
CATHODE 2
CATHODE 3
CATHODE 4
CATHODE DRIVERS
4560
4552
4522
ANODE ON
4
4580
CURRENT LIMITER
4520
ANODE SELECTOR
4550
ISET 1
ISET 2
ISET 3
ISET 4
CURRENT MUX
4542
4582
4500
4518
4540
DACs 1
DACs 2
DACs 3
DACs 4
CURRENT DACs
4516
2
4512
4514
HI LIMIT
TRIP RESET
ANODE SELECT
CATHODE ON
DAC DATA
4519
4510
COMMAND REGISTER
4042
SR DATA
4040
DSP

FIG. 45

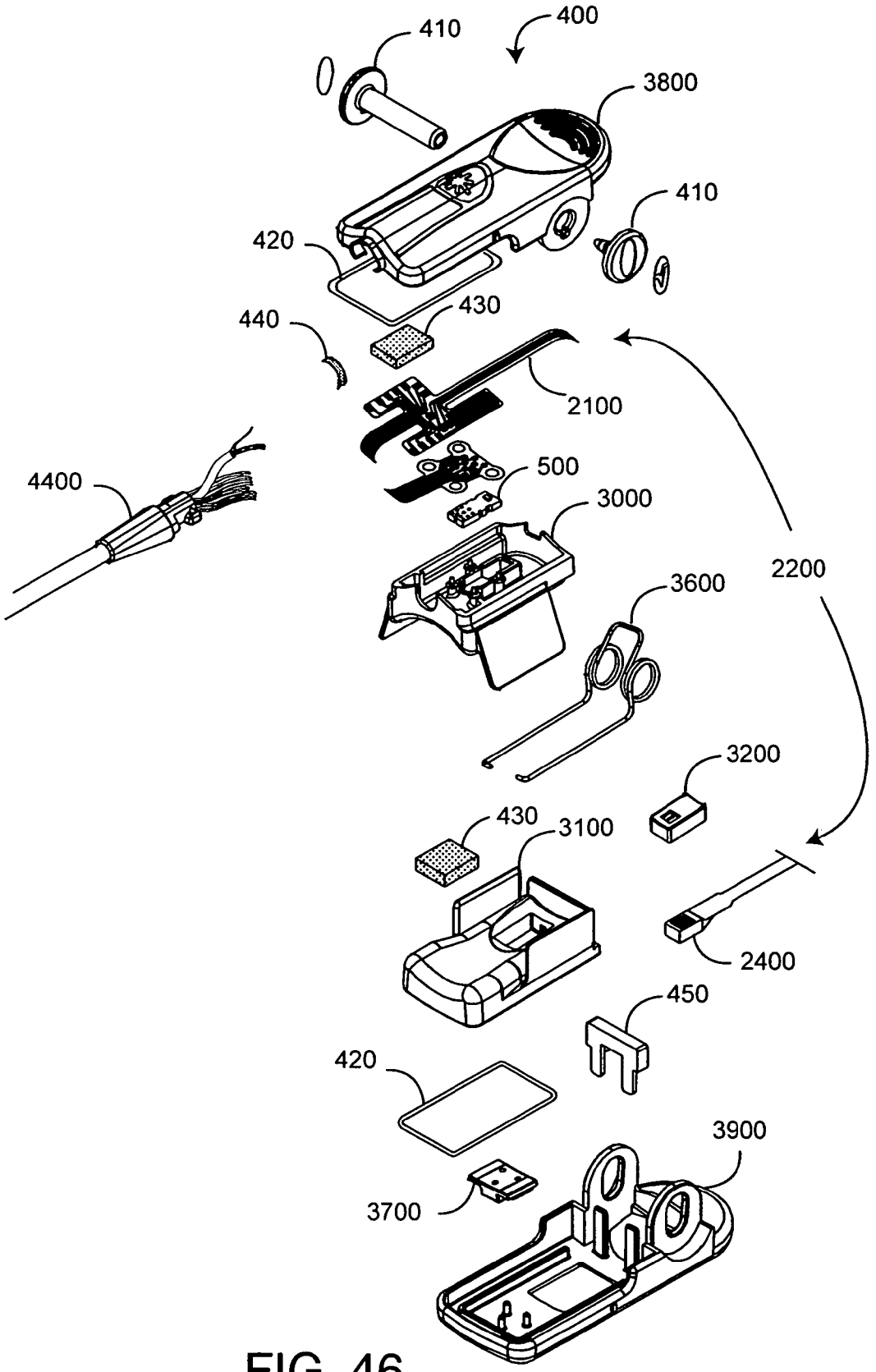
400
410
3800
410
420
430
440
2100
4400
500
3000
2200
3600
3200
430
3100
2400
450
420
3900
3700

FIG. 46

MULTIPLE WAVELENGTH SENSOR EMITTERS

PRIORITY CLAIM TO RELATED PROVISIONAL APPLICATIONS

The present application claims priority benefit under 35 U.S.C. §119(e) to U.S. Provisional Patent Application Ser. No. 60/657,596, filed Mar. 1, 2005, entitled "Multiple Wavelength Sensor," No. 60/657,281, filed Mar. 1, 2005, entitled "Physiological Parameter Confidence Measure," No. 60/657,268, filed Mar. 1, 2005, entitled "Configurable Physiological Measurement System," and No. 60/657,759, filed Mar. 1, 2005, entitled "Noninvasive Multi-Parameter Patient Monitor." The present application incorporates the foregoing disclosures herein by reference.

INCORPORATION BY REFERENCE OF COPENDING RELATED APPLICATIONS

The present application is related to the following copending U.S. utility applications:

	App. Sr. No.	Filing Date	Title	Atty Dock.
1	11/366,995	Mar. 1, 2006	Multiple Wavelength Sensor Equalization	MLR.003A
2	11/366,209	Mar. 1, 2006	Multiple Wavelength Sensor Substrate	MLR.004A
3	11/366,210	Mar. 1, 2006	Multiple Wavelength Sensor Interconnect	MLR.005A
4	11/366,833	Mar. 1, 2006	Multiple Wavelength Sensor Attachment	MLR.006A
5	11/366,997	Mar. 1, 2006	Multiple Wavelength Sensor Drivers	MLR.009A
6	11/367,034	Mar. 1, 2006	Physiological Parameter Confidence Measure	MLR.010A
7	11/367,036	Mar. 1, 2006	Configurable Physiological Measurement System	MLR.011A
8	11/367,033	Mar. 1, 2006	Noninvasive Multi-Parameter Patient Monitor	MLR.012A
9	11/367,014	Mar. 1, 2006	Noninvasive Multi-Parameter Patient Monitor	MLR.013A
10	11/366,208	Mar. 1, 2006	Noninvasive Multi-Parameter Patient Monitor	MLR.014A

The present application incorporates the foregoing disclosures herein by reference.

BACKGROUND OF THE INVENTION

Spectroscopy is a common technique for measuring the concentration of organic and some inorganic constituents of a solution. The theoretical basis of this technique is the Beer-Lambert law, which states that the concentration c_i of an absorbent in solution can be determined by the intensity of light transmitted through the solution, knowing the path-length d_λ, the intensity of the incident light $I_{0,\lambda}$, and the extinction coefficient $\epsilon_{i,\lambda}$ at a particular wavelength λ. In generalized form, the Beer-Lambert law is expressed as:

$$I_\lambda = I_{0,\lambda} e^{-d_\lambda \cdot \mu_{a,\lambda}} \quad (1)$$

$$\mu_{a,\lambda} = \sum_{i=1}^{n} \varepsilon_{i,\lambda} \cdot c_i \quad (2)$$

where $\mu_{a,\lambda}$ is the bulk absorption coefficient and represents the probability of absorption per unit length. The minimum number of discrete wavelengths that are required to solve EQS. 1-2 are the number of significant absorbers that are present in the solution.

A practical application of this technique is pulse oximetry, which utilizes a noninvasive sensor to measure oxygen saturation (SpO_2) and pulse rate. In general, the sensor has light emitting diodes (LEDs) that transmit optical radiation of red and infrared wavelengths into a tissue site and a detector that responds to the intensity of the optical radiation after absorption (e.g., by transmission or transreflectance) by pulsatile arterial blood flowing within the tissue site. Based on this response, a processor determines measurements for SPO_2, pulse rate, and can output representative plethysmographic waveforms. Thus, "pulse oximetry" as used herein encompasses its broad ordinary meaning known to one of skill in the art, which includes at least those noninvasive procedures for measuring parameters of circulating blood through spectroscopy. Moreover, "plethysmograph" as used herein (commonly referred to as "photoplethysmograph"), encompasses its broad ordinary meaning known to one of skill in the art, which includes at least data representative of a change in the absorption of particular wavelengths of light as a function of the changes in body tissue resulting from pulsing blood. Pulse oximeters capable of reading through motion induced noise are available from Masimo Corporation ("Masimo") of Irvine, Calif. Moreover, portable and other oximeters capable of reading through motion induced noise are disclosed in at least U.S. Pat. Nos. 6,770,028, 6,658,276, 6,157,850, 6,002,952 5,769,785, and 5,758,644, which are owned by Masimo and are incorporated by reference herein. Such reading through motion oximeters have gained rapid acceptance in a wide variety of medical applications, including surgical wards, intensive care and neonatal units, general wards, home care, physical training, and virtually all types of monitoring scenarios.

SUMMARY OF THE INVENTION

There is a need to noninvasively measure multiple physiological parameters, other than, or in addition to, oxygen saturation and pulse rate. For example, hemoglobin species that are also significant under certain circumstances are carboxyhemoglobin and methemoglobin. Other blood parameters that may be measured to provide important clinical information are fractional oxygen saturation, total hemaglobin (Hbt), bilirubin and blood glucose, to name a few.

One aspect of a physiological sensor is light emitting sources, each activated by addressing at least one row and at least one column of an electrical grid. The light emitting sources transmit light having multiple wavelengths and a detector is responsive to the transmitted light after attenuation by body tissue.

Another aspect of a physiological sensor is light emitting sources capable of transmitting light having multiple wavelengths. Each of the light emitting sources includes a first contact and a second contact. The first contacts of a first set of the light emitting sources are in communication with a first conductor and the second contacts of a second set of the light emitting sources are in communication with a second conductor. A detector is capable of detecting the transmitted light attenuated by body tissue and outputting a signal indicative of at least one physiological parameter of the body tissue. At least one light emitting source of the first set and at least one light emitting source of the second set are not common to the first and second sets. Further, each of the first set and the second set comprises at least two of the light emitting sources.

A further aspect of a physiological sensor sequentially addresses light emitting sources using conductors of an electrical grid so as to emit light having multiple wavelengths that when attenuated by body tissue is indicative of at least one physiological characteristic. The emitted light is detected after attenuation by body tissue.

BRIEF DESCRIPTION OF THE DRAWINGS

FIG. **1** is a perspective view of a physiological measurement system utilizing a multiple wavelength sensor;

FIGS. **2**A-C are perspective views of multiple wavelength sensor embodiments;

FIG. **3** is a general block diagram of a multiple wavelength sensor and sensor controller;

FIG. **4** is an exploded perspective view of a multiple wavelength sensor embodiment;

FIG. **5** is a general block diagram of an emitter assembly;

FIG. **6** is a perspective view of an emitter assembly embodiment;

FIG. **7** is a general block diagram of an emitter array;

FIG. **8** is a schematic diagram of an emitter array embodiment;

FIG. **9** is a general block diagram of equalization;

FIGS. **10**A-D are block diagrams of various equalization embodiments;

FIGS. **11**A-C are perspective views of an emitter assembly incorporating various equalization embodiments;

FIG. **12** is a general block diagram of an emitter substrate;

FIGS. **13-14** are top and detailed side views of an emitter substrate embodiment;

FIG. **15-16** are top and bottom component layout views of an emitter substrate embodiment;

FIG. **17** is a schematic diagram of an emitter substrate embodiment;

FIG. **18** is a plan view of an inner layer of an emitter substrate embodiment;

FIG. **19** is a general block diagram of an interconnect assembly in relationship to other sensor assemblies;

FIG. **20** is a block diagram of an interconnect assembly embodiment;

FIG. **21** is a partially-exploded perspective view of a flex circuit assembly embodiment of an interconnect assembly;

FIG. **22** is a top plan view of a flex circuit;

FIG. **23** is an exploded perspective view of an emitter portion of a flex circuit assembly;

FIG. **24** is an exploded perspective view of a detector assembly embodiment;

FIGS. **25-26** are block diagrams of adjacent detector and stacked detector embodiments;

FIG. **27** is a block diagram of a finger clip embodiment of an attachment assembly;

FIG. **28** is a general block diagram of a detector pad;

FIGS. **29**A-B are perspective views of detector pad embodiments;

FIGS. **30**A-H are perspective bottom, perspective top, bottom, back, top, side cross sectional, side, and front cross sectional views of an emitter pad embodiment;

FIGS. **31**A-H are perspective bottom, perspective top, top, back, bottom, side cross sectional, side, and front cross sectional views of a detector pad embodiment;

FIGS. **32**A-H are perspective bottom, perspective top, top, back, bottom, side cross sectional, side, and front cross sectional views of a shoe box;

FIGS. **33**A-H are perspective bottom, perspective top, top, back, bottom, side cross sectional, side, and front cross sectional views of a slim-finger emitter pad embodiment;

FIGS. **34**A-H are perspective bottom, perspective top, top, back, bottom, side cross sectional, side, and front cross sectional views of a slim-finger detector pad embodiment;

FIGS. **35**A-B are plan and cross sectional views, respectively, of a spring assembly embodiment;

FIGS. **36**A-C are top, perspective and side views of a finger clip spring;

FIGS. **37**A-D are top, back, bottom, and side views of a spring plate;

FIGS. **38**A-D are front cross sectional, bottom, front and side cross sectional views of an emitter-pad shell;

FIGS. **39**A-D are back, top, front and side cross sectional views of a detector-pad shell;

FIG. **40** is a general block diagram of a monitor and a sensor;

FIGS. **41**A-C are schematic diagrams of grid drive embodiments for a sensor having back-to-back diodes and an information element;

FIG. **42** is a schematic diagrams of a grid drive embodiment for an information element;

FIGS. **43**A-C are schematic diagrams for grid drive readable information elements;

FIGS. **44**A-B are cross sectional and side cut away views of a sensor cable;

FIG. **45** is a block diagram of a sensor controller embodiment; and

FIG. **46** is a detailed exploded perspective view of a multiple wavelength sensor embodiment.

DETAILED DESCRIPTION OF THE PREFERRED EMBODIMENTS

Overview

In this application, reference is made to many blood parameters. Some references that have common shorthand designations are referenced through such shorthand designations. For example, as used herein, HbCO designates carboxyhemoglobin, HbMet designates methemoglobin, and Hbt designates total hemoglobin. Other shorthand designations such as COHb, MetHb, and tHb are also common in the art for these same constituents. These constituents are generally reported in terms of a percentage, often referred to as saturation, relative concentration or fractional saturation. Total hemoglobin is generally reported as a concentration in g/dL. The use of the particular shorthand designators presented in this application does not restrict the term to any particular manner in which the designated constituent is reported.

FIG. **1** illustrates a physiological measurement system **10** having a monitor **100** and a multiple wavelength sensor assembly **200** with enhanced measurement capabilities as compared with conventional pulse oximetry. The physiological measurement system **10** allows the monitoring of a person, including a patient. In particular, the multiple wavelength sensor assembly **200** allows the measurement of blood constituent and related parameters in addition to oxygen saturation and pulse rate. Alternatively, the multiple wavelength sensor assembly **200** allows the measurement of oxygen saturation and pulse rate with increased accuracy or robustness as compared with conventional pulse oximetry.

In one embodiment, the sensor assembly **200** is configured to plug into a monitor sensor port **110**. Monitor keys **160** provide control over operating modes and alarms, to name a few. A display **170** provides readouts of measured parameters, such as oxygen saturation, pulse rate, HbCO and HbMet to name a few.

FIGS. **2**A illustrates a multiple wavelength sensor assembly **200** having a sensor **400** adapted to attach to a tissue site, a sensor cable **4400** and a monitor connector **210**. In one embodiment, the sensor **400** is incorporated into a reusable finger clip adapted to removably attach to, and transmit light through, a fingertip. The sensor cable **4400** and monitor connector **210** are integral to the sensor **400**, as shown. In alternative embodiments, the sensor **400** may be configured separately from the cable **4400** and connector **210**.

FIGS. **2**B-C illustrate alternative sensor embodiments, including a sensor **401** (FIG. **2**B) partially disposable and partially reusable (resposable) and utilizing an adhesive attachment mechanism. Also shown is a sensor **402** (FIG. **2**C) being disposable and utilizing an adhesive attachment mechanism. In other embodiments, a sensor may be configured to attach to various tissue sites other than a finger, such as a foot or an ear. Also a sensor may be configured as a reflectance or transflectance device that attaches to a forehead or other tissue surface.

FIG. **3** illustrates a sensor assembly **400** having an emitter assembly **500**, a detector assembly **2400**, an interconnect assembly **1900** and an attachment assembly **2700**. The emitter assembly **500** responds to drive signals received from a sensor controller **4500** in the monitor **100** via the cable **4400** so as to transmit optical radiation having a plurality of wavelengths into a tissue site. The detector assembly **2400** provides a sensor signal to the monitor **100** via the cable **4400** in response to optical radiation received after attenuation by the tissue site. The interconnect assembly **1900** provides electrical communication between the cable **4400** and both the emitter assembly **500** and the detector assembly **2400**. The attachment assembly **2700** attaches the emitter assembly **500** and detector assembly **2400** to a tissue site, as described above. The emitter assembly **500** is described in further detail with respect to FIG. **5**, below. The interconnect assembly **1900** is described in further detail with respect to FIG. **19**, below. The detector assembly **2400** is described in further detail with respect to FIG. **24**, below. The attachment assembly **2700** is described in further detail with respect to FIG. **27**, below.

FIG. **4** illustrates a sensor **400** embodiment that removably attaches to a fingertip. The sensor **400** houses a multiple wavelength emitter assembly **500** and corresponding detector assembly **2400**. A flex circuit assembly **1900** mounts the emitter and detector assemblies **500**, **2400** and interconnects them to a multi-wire sensor cable **4400**. Advantageously, the sensor **400** is configured in several respects for both wearer comfort and parameter measurement performance. The flex circuit assembly **1900** is configured to mechanically decouple the cable **4400** wires from the emitter and detector assemblies **500**, **2400** to reduce pad stiffness and wearer discomfort. The pads **3000**, **3100** are mechanically decoupled from shells **3800**, **3900** to increase flexibility and wearer comfort. A spring **3600** is configured in hinged shells **3800**, **3900** so that the pivot point of the finger clip is well behind the fingertip, improving finger attachment and more evenly distributing the clip pressure along the finger.

As shown in FIG. **4**, the detector pad **3100** is structured to properly position a fingertip in relationship to the detector assembly **2400**. The pads have flaps that block ambient light. The detector assembly **2400** is housed in an enclosure so as to reduce light piping from the emitter assembly to the detector assembly without passing through fingertip tissue. These and other features are described in detail below. Specifically, emitter assembly embodiments are described with respect to FIGS. **5-18**. Interconnect assembly embodiments, including the flexible circuit assembly **1900**, are described with respect to FIGS. **19-23**. Detector assembly embodiments are described with respect to FIGS. **24-26**. Attachment assembly embodiments are described with respect to FIGS. **27-39**.

Emitter Assembly

FIG. **5** illustrates an emitter assembly **500** having an emitter array **700**, a substrate **1200** and equalization **900**. The emitter array **700** has multiple light emitting sources, each activated by addressing at least one row and at least one column of an electrical grid. The light emitting sources are capable of transmitting optical radiation having multiple wavelengths. The equalization **900** accounts for differences in tissue attenuation of the optical radiation across the multiple wavelengths so as to at least reduce wavelength-dependent variations in detected intensity. The substrate **1200** provides a physical mount for the emitter array and emitter-related equalization and a connection between the emitter array and the interconnection assembly. Advantageously, the substrate **1200** also provides a bulk temperature measurement so as to calculate the operating wavelengths for the light emitting sources. The emitter array **700** is described in further detail with respect to FIG. **7**, below. Equalization is described in further detail with respect to FIG. **9**, below. The substrate **1200** is described in further detail with respect to FIG. **12**, below.

FIG. **6** illustrates an emitter assembly **500** embodiment having an emitter array **700**, an encapsulant **600**, an optical filter **1100** and a substrate **1200**. Various aspects of the emitter assembly **500** are described with respect to FIGS. **7-18**, below. The emitter array **700** emits optical radiation having multiple wavelengths of predetermined nominal values, advantageously allowing multiple parameter measurements. In particular, the emitter array **700** has multiple light emitting diodes (LEDs) **710** that are physically arranged and electrically connected in an electrical grid to facilitate drive control, equalization, and minimization of optical pathlength differences at particular wavelengths. The optical filter **1100** is advantageously configured to provide intensity equalization across a specific LED subset. The substrate **1200** is configured to provide a bulk temperature of the emitter array **700** so as to better determine LED operating wavelengths.

Emitter Array

FIG. **7** illustrates an emitter array **700** having multiple light emitters (LE) **710** capable of emitting light **702** having multiple wavelengths into a tissue site **1**. Row drivers **4530** and column drivers **4560** are electrically connected to the light emitters **710** and activate one or more light emitters **710** by addressing at least one row **720** and at least one column **740** of an electrical grid. In one embodiment, the light emitters **710** each include a first contract **712** and a second contact **714**. The first contract **712** of a first subset **730** of light emitters is in communication with a first conductor **720** of the electrical grid. The second contact **714** of a second subset **750** of light emitters is in communication with a second conductor **740**. Each subset comprises at least two light emitters, and at least one of the light emitters of the first and second subsets **730**, **750** are not in common. A detector **2400** is capable of detecting the emitted light **702** and outputting a sensor signal **2500** responsive to the emitted light **702** after attenuation by the tissue site **1**. As such, the sensor signal **2500** is indicative of at least one physiological parameter corresponding to the tissue site **1**, as described above.

FIG. **8** illustrates an emitter array **700** having LEDs **801** connected within an electrical grid of n rows and m columns totaling n+m drive lines **4501**, **4502**, where n and m integers greater than one. The electrical grid advantageously minimizes the number of drive lines required to activate the LEDs

801 while preserving flexibility to selectively activate individual LEDs 801 in any sequence and multiple LEDs 801 simultaneously. The electrical grid also facilitates setting LED currents so as to control intensity at each wavelength, determining operating wavelengths and monitoring total grid current so as to limit power dissipation. The emitter array 700 is also physically configured in rows 810. This physical organization facilitates clustering LEDs 801 according to wavelength so as to minimize pathlength variations and facilitates equalization of LED intensities.

As shown in FIG. 8, one embodiment of an emitter array 700 comprises up to sixteen LEDs 801 configured in an electrical grid of four rows 810 and four columns 820. Each of the four row drive lines 4501 provide a common anode connection to four LEDs 801, and each of the four column drive lines 4502 provide a common cathode connection to four LEDs 801. Thus, the sixteen LEDs 801 are advantageously driven with only eight wires, including four anode drive lines 812 and four cathode drive lines 822. This compares favorably to conventional common anode or cathode LED configurations, which require more drive lines. In a particular embodiment, the emitter array 700 is partially populated with eight LEDs having nominal wavelengths as shown in TABLE 1. Further, LEDs having wavelengths in the range of 610-630 nm are grouped together in the same row. The emitter array 700 is adapted to a physiological measurement system 10 (FIG. 1) for measuring H_bCO and/or METHb in addition to S_pO_2 and pulse rate.

TABLE 1

	Nominal LED Wavelengths		
LED	λ	Row	Col
D1	630	1	1
D2	620	1	2
D3	610	1	3
D4		1	4
D5	700	2	1
D6	730	2	2
D7	660	2	3
D8	805	2	4
D9		3	1
D10		3	2
D11		3	3
D12	905	3	4
D13		4	1
D14		4	2
D15		4	3
D16		4	4

Also shown in FIG. 8, row drivers 4530 and column drivers 4560 located in the monitor 100 selectively activate the LEDs 801. In particular, row and column drivers 4530, 4560 function together as switches to Vcc and current sinks, respectively, to activate LEDs and as switches to ground and Vcc, respectively, to deactivate LEDs. This push-pull drive configuration advantageously prevents parasitic current flow in deactivated LEDs. In a particular embodiment, only one row drive line 4501 is switched to Vcc at a time. One to four column drive lines 4502, however, can be simultaneously switched to a current sink so as to simultaneously activate multiple LEDs within a particular row. Activation of two or more LEDs of the same wavelength facilitates intensity equalization, as described with respect to FIGS. 9-11, below. LED drivers are described in further detail with respect to FIG. 45, below.

Although an emitter assembly is described above with respect to an array of light emitters each configured to transmit optical radiation centered around a nominal wavelength, in another embodiment, an emitter assembly advantageously utilizes one or more tunable broadband light sources, including the use of filters to select the wavelength, so as to minimize wavelength-dependent pathlength differences from emitter to detector. In yet another emitter assembly embodiment, optical radiation from multiple emitters each configured to transmit optical radiation centered around a nominal wavelength is funneled to a tissue site point so as to minimize wavelength-dependent pathlength differences. This funneling may be accomplish with fiberoptics or mirrors, for example. In further embodiments, the LEDs 801 can be configured with alternative orientations with correspondingly different drivers among various other configurations of LEDs, drivers and interconnecting conductors.

Equalization

FIG. 9 illustrate a physiological parameter measurement system 10 having a controller 4500, an emitter assembly 500, a detector assembly 2400 and a front-end 4030. The emitter assembly 500 is configured to transmit optical radiation having multiple wavelengths into the tissue site 1. The detector assembly 2400 is configured to generate a sensor signal 2500 responsive to the optical radiation after tissue attenuation. The front-end 4030 conditions the sensor signal 2500 prior to analog-to-digital conversion (ADC).

FIG. 9 also generally illustrates equalization 900 in a physiological measurement system 10 operating on a tissue site 1. Equalization encompasses features incorporated into the system 10 in order to provide a sensor signal 2500 that falls well within the dynamic range of the ADC across the entire spectrum of emitter wavelengths. In particular, equalization compensates for the imbalance in tissue light absorption due to Hb and HbO_2 910. Specifically, these blood constituents attenuate red wavelengths greater than IR wavelengths. Ideally, equalization 900 balances this unequal attenuation. Equalization 900 can be introduced anywhere in the system 10 from the controller 4500 to front-end 4000 and can include compensatory attenuation versus wavelength, as shown, or compensatory amplification versus or both.

Equalization can be achieved to a limited extent by adjusting drive currents from the controller 4500 and front-end 4030 amplification accordingly to wavelength so as to compensate for tissue absorption characteristics. Signal demodulation constraints, however, limit the magnitude of these adjustments. Advantageously, equalization 900 is also provided along the optical path from emitters 500 to detector 2400. Equalization embodiments are described in further detail with respect to FIGS. 10-11, below.

FIGS. 10A-D illustrate various equalization embodiments having an emitter array 700 adapted to transmit optical radiation into a tissue site 1 and a detector assembly 2400 adapted to generate a sensor signal 2500 responsive to the optical radiation after tissue attenuation. FIG. 10A illustrates an optical filter 1100 that attenuates at least a portion of the optical radiation before it is transmitted into a tissue site 1. In particular, the optical filter 1100 attenuates at least a portion of the IR wavelength spectrum of the optical radiation so as to approximate an equalization curve 900 (FIG. 9). FIG. 10B illustrates an optical filter 1100 that attenuates at least a portion of the optical radiation after it is attenuated by a tissue site 1, where the optical filter 1100 approximates an equalization curve 900 (FIG. 9).

FIG. 10C illustrates an emitter array 700 where at least a portion of the emitter array generates one or more wavelengths from multiple light emitters 710 of the same wavelength. In particular, the same-wavelength light emitters 710 boost at least a portion of the red wavelength spectrum so as

to approximately equalize the attenuation curves **910** (FIG. **9**). FIG. **10**D illustrates a detector assembly **2400** having multiple detectors **2610**, **2620** selected so as to equalize the attenuation curves **910** (FIG. **9**). To a limited extent, optical equalization can also be achieved by selection of particular emitter array **700** and detector **2400** components, e.g. LEDs having higher output intensities or detectors having higher sensitivities at red wavelengths. Although equalization embodiments are described above with respect to red and IR wavelengths, these equalization embodiments can be applied to equalize tissue characteristics across any portion of the optical spectrum.

FIGS. **11**A-C illustrates an optical filter **1100** for an emitter assembly **500** that advantageously provides optical equalization, as described above. LEDs within the emitter array **700** may be grouped according to output intensity or wavelength or both. Such a grouping facilitates equalization of LED intensity across the array. In particular, relatively low tissue absorption and/or relatively high output intensity LEDs can be grouped together under a relatively high attenuation optical filter. Likewise, relatively low tissue absorption and/or relatively low output intensity LEDs can be grouped together without an optical filter or under a relatively low or negligible attenuation optical filter. Further, high tissue absorption and/or low intensity LEDs can be grouped within the same row with one or more LEDs of the same wavelength being simultaneously activated, as described with respect to FIG. **10**C, above. In general, there can be any number of LED groups and any number of LEDs within a group. There can also be any number of optical filters corresponding to the groups having a range of attenuation, including no optical filter and/or a "clear" filter having negligible attenuation.

As shown in FIGS. **11**A-C, a filtering media may be advantageously added to an encapsulant that functions both as a cover to protect LEDs and bonding wires and as an optical filter **1100**. In one embodiment, a filtering media **1100** encapsulates a select group of LEDs and a clear media **600** (FIG. **6**) encapsulates the entire array **700** and the filtering media **1000** (FIG. **6**). In a particular embodiment, corresponding to TABLE 1, above, five LEDs nominally emitting at 660-905 nm are encapsulated with both a filtering media **1100** and an overlying clear media **600** (FIG. **6**), i.e. attenuated. In a particular embodiment, the filtering media **1100** is a 40:1 mixture of a clear encapsulant (EPO-TEK OG147-7) and an opaque encapsulate (EPO-TEK OG147) both available from Epoxy Technology, Inc., Billerica, Mass. Three LEDs nominally emitting at 610-630 nm are only encapsulated with the clear media **600** (FIG. **6**), i.e. unattenuated. In alternative embodiments, individual LEDs may be singly or multiply encapsulated according to tissue absorption and/or output intensity. In other alternative embodiments, filtering media may be separately attachable optical filters or a combination of encapsulants and separately attachable optical filters. In a particular embodiment, the emitter assembly **500** has one or more notches along each side proximate the component end **1305** (FIG. **13**) for retaining one or more clip-on optical filters.

Substrate

FIG. **12** illustrates light emitters **710** configured to transmit optical radiation **1201** having multiple wavelengths in response to corresponding drive currents **1210**. A thermal mass **1220** is disposed proximate the emitters **710** so as to stabilize a bulk temperature **1202** for the emitters. A temperature sensor **1230** is thermally coupled to the thermal mass **1220**, wherein the temperature sensor **1230** provides a temperature sensor output **1232** responsive to the bulk temperature **1202** so that the wavelengths are determinable as a function of the drive currents **1210** and the bulk temperature **1202**.

In one embodiment, an operating wavelength λ_a of each light emitter **710** is determined according to EQ. 3

$$\lambda_a = f\left(T_b, I_{drive}, \sum I_{drive}\right) \tag{3}$$

where T_b is the bulk temperature, I_{drive} is the drive current for a particular light emitter, as determined by the sensor controller **4500** (FIG. **45**), described below, and ΣI_{drive} is the total drive current for all light emitters. In another embodiment, temperature sensors are configured to measure the temperature of each light emitter **710** and an operating wavelength λ_a of each light emitter **710** is determined according to EQ. 4

$$\lambda_a = f\left(T_a, I_{drive}, \sum I_{drive}\right) \tag{4}$$

where T_a is the temperature of a particular light emitter, I_{drive} is the drive current for that light emitter and ΣI_{drive} is the total drive current for all light emitters.

In yet another embodiment, an operating wavelength for each light emitter is determined by measuring the junction voltage for each light emitter **710**. In a further embodiment, the temperature of each light emitter **710** is controlled, such as by one or more Peltier cells coupled to each light emitter **710**, and an operating wavelength for each light emitter **710** is determined as a function of the resulting controlled temperature or temperatures. In other embodiments, the operating wavelength for each light emitter **710** is determined directly, for example by attaching a charge coupled device (CCD) to each light emitter or by attaching a fiberoptic to each light emitter and coupling the fiberoptics to a wavelength measuring device, to name a few.

FIGS. **13-18** illustrate one embodiment of a substrate **1200** configured to provide thermal conductivity between an emitter array **700** (FIG. **8**) and a thermistor **1540** (FIG. **16**). In this manner, the resistance of the thermistor **1540** (FIG. **16**) can be measured in order to determine the bulk temperature of LEDs **801** (FIG. **8**) mounted on the substrate **1200**. The substrate **1200** is also configured with a relatively significant thermal mass, which stabilizes and normalizes the bulk temperature so that the thermistor measurement of bulk temperature is meaningful.

FIGS. **13-14** illustrate a substrate **1200** having a component side **1301**, a solder side **1302**, a component end **1305** and a connector end **1306**. Alignment notches **1310** are disposed between the ends **1305**, **1306**. The substrate **1200** further has a component layer **1401**, inner layers **1402-1405** and a solder layer **1406**. The inner layers **1402-1405**, e.g. inner layer **1402** (FIG. **18**), have substantial metallized areas **1411** that provide a thermal mass **1220** (FIG. **12**) to stabilize a bulk temperature for the emitter array **700** (FIG. **12**). The metallized areas **1411** also function to interconnect component pads **1510** and wire bond pads **1520** (FIG. **15**) to the connector **1530**.

FIGS. **15-16** illustrate a substrate **1200** having component pads **1510** and wire bond pads **1520** at a component end **1305**. The component pads **1510** mount and electrically connect a first side (anode or cathode) of the LEDs **801** (FIG. **8**) to the substrate **1200**. Wire bond pads **1520** electrically connect a second side (cathode or anode) of the LEDs **801** (FIG. **8**) to the substrate **1200**. The connector end **1306** has a connector **1530** with connector pads **1532**, **1534** that mount and electrically connect the emitter assembly **500** (FIG. **23**), including the substrate **1200**, to the flex circuit **2200** (FIG. **22**). Sub-

strate layers **1401-1406** (FIG. **14**) have traces that electrically connect the component pads **1510** and wire bond pads **1520** to the connector **1532-1534**. A thermistor **1540** is mounted to thermistor pads **1550** at the component end **1305**, which are also electrically connected with traces to the connector **1530**. Plated thru holes electrically connect the connector pads **1532**, **1534** on the component and solder sides **1301**, **1302**, respectively.

FIG. **17** illustrates the electrical layout of a substrate **1200**. A portion of the LEDs **801**, including D**1**-D**4** and D**13**-D**16** have cathodes physically and electrically connected to component pads **1510** (FIG. **15**) and corresponding anodes wire bonded to wire bond pads **1520**. Another portion of the LEDs **801**, including D**5**-D**8** and D**9**-D**12**, have anodes physically and electrically connected to component pads **1510** (FIG. **15**) and corresponding cathodes wire bonded to wire bond pads **1520**. The connector **1530** has row pinouts J**21**-J**24**, column pinouts J**31**-J**34** and thermistor pinouts J**40**-J**41** for the LEDs **801** and thermistor **1540**.

Interconnect Assembly

FIG. **19** illustrates an interconnect assembly **1900** that mounts the emitter assembly **500** and detector assembly **2400**, connects to the sensor cable **4400** and provides electrical communications between the cable and each of the emitter assembly **500** and detector assembly **2400**. In one embodiment, the interconnect assembly **1900** is incorporated with the attachment assembly **2700**, which holds the emitter and detector assemblies to a tissue site. An interconnect assembly embodiment utilizing a flexible (flex) circuit is described with respect to FIGS. **20-24**, below.

FIG. **20** illustrates an interconnect assembly **1900** embodiment having a circuit substrate **2200**, an emitter mount **2210**, a detector mount **2220** and a cable connector **2230**. The emitter mount **2210**, detector mount **2220** and cable connector **2230** are disposed on the circuit substrate **2200**. The emitter mount **2210** is adapted to mount an emitter assembly **500** having multiple emitters. The detector mount **2220** is adapted to mount a detector assembly **2400** having a detector. The cable connector **2230** is adapted to attach a sensor cable **4400**. A first plurality of conductors **2040** disposed on the circuit substrate **2200** electrically interconnects the emitter mount **2210** and the cable connector **2230**. A second plurality of conductors **2050** disposed on the circuit substrate **2200** electrically interconnects the detector mount **2220** and the cable connector **2230**. A decoupling **2060** disposed proximate the cable connector **2230** substantially mechanically isolates the cable connector **2230** from both the emitter mount **2210** and the detector mount **2220** so that sensor cable stiffness is not translated to the emitter assembly **500** or the detector assembly **2400**. A shield **2070** is adapted to fold over and shield one or more wires or pairs of wires of the sensor cable **4400**.

FIG. **21** illustrates a flex circuit assembly **1900** having a flex circuit **2200**, an emitter assembly **500** and a detector assembly **2400**, which is configured to terminate the sensor end of a sensor cable **4400**. The flex circuit assembly **1900** advantageously provides a structure that electrically connects yet mechanically isolates the sensor cable **4400**, the emitter assembly **500** and the detector assembly **2400**. As a result, the mechanical stiffness of the sensor cable **4400** is not translated to the sensor pads **3000**, **3100** (FIGS. **30-31**), allowing a comfortable finger attachment for the sensor **200** (FIG. **1**). In particular, the emitter assembly **500** and detector assembly **2400** are mounted to opposite ends **2201**, **2202** (FIG. **22**) of an elongated flex circuit **2200**. The sensor cable **4400** is mounted to a cable connector **2230** extending from a middle portion of the flex circuit **2200**. Detector wires **4470** are shielded at the flex circuit junction by a fold-over conductive ink flap **2240**, which is connected to a cable inner shield **4450**. The flex circuit **2200** is described in further detail with respect to FIG. **22**. The emitter portion of the flex circuit assembly **1900** is described in further detail with respect to FIG. **23**. The detector assembly **2400** is described with respect to FIG. **24**. The sensor cable **4400** is described with respect to FIGS. **44**A-B, below.

FIG. **22** illustrates a sensor flex circuit **2200** having an emitter end **2201**, a detector end **2202**, an elongated interconnect **2204**, **2206** between the ends **2201**, **2202** and a cable connector **2230** extending from the interconnect **2204**, **2206**. The emitter end **2201** forms a "head" having emitter solder pads **2210** for attaching the emitter assembly **500** (FIG. **6**) and mounting ears **2214** for attaching to the emitter pad **3000** (FIG. **30**B), as described below. The detector end **2202** has detector solder pads for attaching the detector **2410** (FIG. **24**). The interconnect **2204** between the emitter end **2201** and the cable connector **2230** forms a "neck," and the interconnect **2206** between the detector end **2202** and the cable connector **2230** forms a "tail." The cable connector **2230** forms "wings" that extend from the interconnect **2204**, **2206** between the neck **2204** and tail **2206**. A conductive ink flap **2240** connects to the cable inner shield **4450** (FIGS. **44**A-B) and folds over to shield the detector wires **4470** (FIGS. **44**A-B) soldered to the detector wire pads **2236**. The outer wire pads **2238** connect to the remaining cable wires **4430** (FIGS. **44**A-B). The flex circuit **2200** has top coverlay, top ink, inner coverlay, trace, trace base, bottom ink and bottom coverlay layers.

The flex circuit **2200** advantageously provides a connection between a multiple wire sensor cable **4400** (FIGS. **44**A-B), a multiple wavelength emitter assembly **500** (FIG. **6**) and a detector assembly **2400** (FIG. **24**) without rendering the emitter and detector assemblies unwieldy and stiff. In particular, the wings **2230** provide a relatively large solder pad area **2232** that is narrowed at the neck **2204** and tail **2206** to mechanically isolate the cable **4400** (FIGS. **44**A-B) from the remainder of the flex circuit **2200**. Further, the neck **2206** is folded (see FIG. **4**) for installation in the emitter pad **3000** (FIGS. **30**A-H) and acts as a flexible spring to further mechanically isolate the cable **4400** (FIGS. **44**A-B) from the emitter assembly **500** (FIG. **4**). The tail **2206** provides an integrated connectivity path between the detector assembly **2400** (FIG. **24**) mounted in the detector pad **3100** (FIGS. **31**A-H) and the cable connector **2230** mounted in the opposite emitter pad **3000** (FIGS. **30**A-H).

FIG. **23** illustrates the emitter portion of the flex circuit assembly **1900** (FIG. **21**) having the emitter assembly **500**. The emitter assembly connector **1530** is attached to the emitter end **2210** of the flex circuit **2200** (FIG. **22**). In particular, reflow solder **2330** connects thru hole pads **1532**, **1534** of the emitter assembly **500** to corresponding emitter pads **2310** of the flex circuit **2200** (FIG. **22**).

FIG. **24** illustrates a detector assembly **2400** including a detector **2410**, solder pads **2420**, copper mesh tape **2430**, an EMI shield **2440** and foil **2450**. The detector **2410** is soldered **2460** chip side down to detector solder pads **2420** of the flex circuit **2200**. The detector solder joint and detector ground pads **2420** are wrapped with the Kapton tape **2470**. EMI shield tabs **2442** are folded onto the detector pads **2420** and soldered. The EMI shield walls are folded around the detector **2410** and the remaining tabs **2442** are soldered to the back of the EMI shield **2440**. The copper mesh tape **2430** is cut to size and the shielded detector and flex circuit solder joint are wrapped with the copper mesh tape **2430**. The foil **2450** is cut to size with a predetermined aperture **2452**. The foil **2450** is

wrapped around shielded detector with the foil side in and the aperture **2452** is aligned with the EMI shield grid **2444**.

Detector Assembly

FIG. **25** illustrates an alternative detector assembly **2400** embodiment having adjacent detectors. Optical radiation having multiple wavelengths generated by emitters **700** is transmitted into a tissue site **1**. Optical radiation at a first set of wavelengths is detected by a first detector **2510**, such as, for example, a Si detector. Optical radiation at a second set of wavelengths is detected by a second detector **2520**, such as, for example, a GaAs detector.

FIG. **26** illustrates another alternative detector assembly **2400** embodiment having stacked detectors coaxial along a light path. Optical radiation having multiple wavelengths generated by emitters **700** is transmitted into a tissue site **1**. Optical radiation at a first set of wavelengths is detected by a first detector **2610**. Optical radiation at a second set of wavelengths passes through the first detector **2610** and is detected by a second detector **2620**. In a particular embodiment, a silicon (Si) detector and a gallium arsenide (GaAs) detector are used. The Si detector is placed on top of the GaAs detector so that light must pass through the Si detector before reaching the GaAs detector. The Si detector can be placed directly on top of the GaAs detector or the Si and GaAs detector can be separated by some other medium, such as a transparent medium or air. In another particular embodiment, a germanium detector is used instead of the GaAs detector. Advantageously, the stacked detector arrangement minimizes error caused by pathlength differences as compared with the adjacent detector embodiment.

Finger Clip

FIG. **27** illustrates a finger clip embodiment **2700** of a physiological sensor attachment assembly. The finger clip **2700** is configured to removably attach an emitter assembly **500** (FIG. **6**) and detector assembly **2400** (FIG. **24**), interconnected by a flex circuit assembly **1900**, to a fingertip. The finger clip **2700** has an emitter shell **3800**, an emitter pad **3000**, a detector pad **2800** and a detector shell **3900**. The emitter shell **3800** and the detector shell **3900** are rotatably connected and urged together by the spring assembly **3500**. The emitter pad **3000** is fixedly retained by the emitter shell. The emitter assembly **500** (FIG. **6**) is mounted proximate the emitter pad **3000** and adapted to transmit optical radiation having a plurality of wavelengths into fingertip tissue. The detector pad **2800** is fixedly retained by the detector shell **3900**. The detector assembly **3500** is mounted proximate the detector pad **2800** and adapted to receive the optical radiation after attenuation by fingertip tissue.

FIG. **28** illustrates a detector pad **2800** advantageously configured to position and comfortably maintain a fingertip relative to a detector assembly for accurate sensor measurements. In particular, the detector pad has fingertip positioning features including a guide **2810**, a contour **2820** and a stop **2830**. The guide **2810** is raised from the pad surface **2803** and narrows as the guide **2810** extends from a first end **2801** to a second end **2802** so as to increasingly conform to a fingertip as a fingertip is inserted along the pad surface **2803** from the first end **2801**. The contour **2820** has an indentation defined along the pad surface **2803** generally shaped to conform to a fingertip positioned over a detector aperture **2840** located within the contour **2820**. The stop **2830** is raised from the pad surface **2803** so as to block the end of a finger from inserting beyond the second end **2802**. FIGS. **29**A-B illustrate detector pad embodiments **3100**, **3400** each having a guide **2810**, a contour **2820** and a stop **2830**, described in further detail with respect to FIGS. **31** and **34**, respectively.

FIGS. **30**A-H illustrate an emitter pad **3000** having emitter pad flaps **3010**, an emitter window **3020**, mounting pins **3030**, an emitter assembly cavity **3040**, isolation notches **3050**, a flex circuit notch **3070** and a cable notch **3080**. The emitter pad flaps **3010** overlap with detector pad flaps **3110** (FIGS. **31**A-H) to block ambient light. The emitter window **3020** provides an optical path from the emitter array **700** (FIG. **8**) to a tissue site. The mounting pins **3030** accommodate apertures in the flex circuit mounting ears **2214** (FIG. **22**), and the cavity **3040** accommodates the emitter assembly **500** (FIG. **21**). Isolation notches **3050** mechanically decouple the shell attachment **3060** from the remainder of the emitter pad **3000**. The flex circuit notch **3070** accommodates the flex circuit tail **2206** (FIG. **22**) routed to the detector pad **3100** (FIGS. **31**A-H). The cable notch **3080** accommodates the sensor cable **4400** (FIGS. **44**A-B). FIGS. **33**A-H illustrate an alternative slim finger emitter pad **3300** embodiment.

FIGS. **31**A-H illustrate a detector pad **3100** having detector pad flaps **3110**, a shoe box cavity **3120** and isolation notches **3150**. The detector pad flaps **3110** overlap with emitter pad flaps **3010** (FIGS. **30**A-H), interleaving to block ambient light. The shoe box cavity **3120** accommodates a shoe box **3200** (FIG. **32**A-H) described below. Isolation notches **3150** mechanically decouple the attachment points **3160** from the remainder of the detector pad **3100**. FIGS. **34**A-H illustrate an alternative slim finger detector pad **3400** embodiment.

FIGS. **32**A-H illustrate a shoe box **3200** that accommodates the detector assembly **2400** (FIG. **24**). A detector window **3210** provides an optical path from a tissue site to the detector **2410** (FIG. **24**). A flex circuit notch **3220** accommodates the flex circuit tail **2206** (FIG. **22**) routed from the emitter pad **3000** (FIGS. **30**A-H). In one embodiment, the shoe box **3200** is colored black or other substantially light absorbing color and the emitter pad **3000** and detector pad **3100** are each colored white or other substantially light reflecting color.

FIGS. **35-37** illustrate a spring assembly **3500** having a spring **3600** configured to urge together an emitter shell **3800** (FIG. **46**) and a detector shell **3900**. The detector shell is rotatably connected to the emitter shell. The spring is disposed between the shells **3800**, **3900** and adapted to create a pivot point along a finger gripped between the shells that is substantially behind the fingertip. This advantageously allows the shell hinge **3810**, **3910** (FIGS. **38-39**) to expand so as to distribute finger clip force along the inserted finger, comfortably keeping the fingertip in position over the detector without excessive force.

As shown in FIGS. **36**A-C, the spring **3600** has coils **3610**, an emitter shell leg **3620** and a detector shell leg **3630**. The emitter shell leg **3620** presses against the emitter shell **3800** (FIGS. **38**A-D) proximate a grip **3820** (FIGS. **38**A-D). The detector shell legs **3630** extend along the detector shell **3900** (FIGS. **39**A-D) to a spring plate **3700** (FIGS. **37**A-D) attachment point. The coil **3610** is secured by hinge pins **410** (FIG. **46**) and is configured to wind as the finger clip is opened, reducing its diameter and stress accordingly.

As shown in FIGS. **37**A-D the spring plate **3700** has attachment apertures **3710**, spring leg slots **3720**, and a shelf **3730**. The attachment apertures **3710** accept corresponding shell posts **3930** (FIGS. **39**A-D) so as to secure the spring plate **3700** to the detector shell **3900** (FIG. **39**A-D). Spring legs **3630** (FIG. **36**A-C) are slidably anchored to the detector shell **3900** (FIG. **39**A-D) by the shelf **3730**, advantageously allowing the combination of spring **3600**, shells **3800**, **3900** and hinges **3810**, **3910** to adjust to various finger sizes and shapes.

FIGS. **38-39** illustrate the emitter and detector shells **3800**, **3900**, respectively, having hinges **3810**, **3910** and grips **3820**,

3920. Hinge apertures 3812, 3912 accept hinge pins 410 (FIG. 46) so as to create a finger clip. The detector shell hinge aperture 3912 is elongated, allowing the hinge to expand to accommodate a finger.

Monitor and Sensor

FIG. 40 illustrates a monitor 100 and a corresponding sensor assembly 200, as described generally with respect to FIGS. 1-3, above. The sensor assembly 200 has a sensor 400 and a sensor cable 4400. The sensor 400 houses an emitter assembly 500 having emitters responsive to drivers within a sensor controller 4500 so as to transmit optical radiation into a tissue site. The sensor 400 also houses a detector assembly 2400 that provides a sensor signal 2500 responsive to the optical radiation after tissue attenuation. The sensor signal 2500 is filtered, amplified, sampled and digitized by the front-end 4030 and input to a DSP (digital signal processor) 4040, which also commands the sensor controller 4500. The sensor cable 4400 electrically communicates drive signals from the sensor controller 4500 to the emitter assembly 500 and a sensor signal 2500 from the detector assembly 2400 to the front-end 4030. The sensor cable 4400 has a monitor connector 210 that plugs into a monitor sensor port 110.

In one embodiment, the monitor 100 also has a reader 4020 capable of obtaining information from an information element (IE) in the sensor assembly 200 and transferring that information to the DSP 4040, to another processor or component within the monitor 100, or to an external component or device that is at least temporarily in communication with the monitor 100. In an alternative embodiment, the reader function is incorporated within the DSP 4040, utilizing one or more of DSP I/O, ADC, DAC features and corresponding processing routines, as examples.

In one embodiment, the monitor connector 210 houses the information element 4000, which may be a memory device or other active or passive electrical component. In a particular embodiment, the information element 4000 is an EPROM, or other programmable memory, or an EEPROM, or other reprogrammable memory, or both. In an alternative embodiment, the information element 4000 is housed within the sensor 400, or an information element 4000 is housed within both the monitor connector 4000 and the sensor 400. In yet another embodiment, the emitter assembly 500 has an information element 4000, which is read in response to one or more drive signals from the sensor controller 4500, as described with respect to FIGS. 41-43, below. In a further embodiment, a memory information element is incorporated into the emitter array 700 (FIG. 8) and has characterization information relating to the LEDs 801 (FIG. 8). In one advantageous embodiment, trend data relating to slowly varying parameters, such as perfusion index, HbCO or METHb, to name a few, are stored in an IE memory device, such as EEPROM.

Back-To-Back LEDs

FIGS. 41-43 illustrate alternative sensor embodiments. A sensor controller 4500 configured to activate an emitter array 700 (FIG. 7) arranged in an electrical grid, is described with respect to FIG. 7, above. Advantageously, a sensor controller 4500 so configured is also capable of driving a conventional two-wavelength (red and IR) sensor 4100 having back-to-back LEDs 4110, 4120 or an information element 4300 or both.

FIG. 41A illustrates a sensor 4100 having an electrical grid 4130 configured to activate light emitting sources by addressing at least one row conductor and at least one column conductor. A first LED 4110 and a second LED 4120 are configured in a back-to-back arrangement so that a first contact 4152 is connected to a first LED 4110 cathode and a second LED 4120 anode and a second contact 4154 is connected to a first LED 4110 anode and a second LED 4120 cathode. The first contact 4152 is in communications with a first row conductor 4132 and a first column conductor 4134. The second contact is in communications with a second row conductor 4136 and a second column conductor 4138. The first LED 4110 is activated by addressing the first row conductor 4132 and the second column conductor 4138. The second LED 4120 is activated by addressing the second row conductor 4136 and the first column conductor 4134.

FIG. 41B illustrates a sensor cable 4400 embodiment capable of communicating signals between a monitor 100 and a sensor 4100. The cable 4400 has a first row input 4132, a first column input 4134, a second row input 4136 and a second column input 4138. A first output 4152 combines the first row input 4132 and the first column input 4134. A second output 4154 combines a second row input 4136 and second column input 4138.

FIG. 41C illustrates a monitor 100 capable of communicating drive signals to a sensor 4100. The monitor 4400 has a first row signal 4132, a first column signal 4134, a second row signal 4136 and a second column signal 4138. A first output signal 4152 combines the first row signal 4132 and the first column signal 4134. A second output signal 4154 combines a second row signal 4136 and second column signal 4138.

Information Elements

FIGS. 42-43 illustrate information element 4200-4300 embodiments in communications with emitter array drivers configured to activate light emitters connected in an electrical grid. The information elements are configured to provide information as DC values, AC values or a combination of DC and AC values in response corresponding DC, AC or combination DC and AC electrical grid drive signals. FIG. 42 illustrates information element embodiment 4200 advantageously driven directly by an electrical grid having rows 710 and columns 720. In particular, the information element 4200 has a series connected resistor R_2 4210 and diode 4220 connected between a row line 710 and a column line 720 of an electrical grid. In this manner, the resistor R_2 value can be read in a similar manner that LEDs 810 (FIG. 8) are activated. The diode 4220 is oriented, e.g. anode to row and cathode to column as the LEDs so as to prevent parasitic currents from unwanted activation of LEDs 810 (FIG. 8).

FIGS. 43A-C illustrate other embodiments where the value of R_1 is read with a DC grid drive current and a corresponding grid output voltage level. In other particular embodiments, the combined values of R_1, R_2 and C or, alternatively, R_1, R_2 and L are read with a varying (AC) grid drive currents and a corresponding grid output voltage waveform. As one example, a step in grid drive current is used to determine component values from the time constant of a corresponding rise in grid voltage. As another example, a sinusoidal grid drive current is used to determine component values from the magnitude or phase or both of a corresponding sinusoidal grid voltage. The component values determined by DC or AC electrical grid drive currents can represent sensor types, authorized suppliers or manufacturers, emitter wavelengths among others. Further, a diode D (FIG. 43C) can be used to provide one information element reading R_1 at one drive level or polarity and another information element reading, combining R_1 and R_2, at a second drive level or polarity, i.e. when the diode is forward biased.

Passive information element 4300 embodiments may include any of various combinations of resistors, capacitors or inductors connected in series and parallel, for example. Other information element 4300 embodiments connected to an electrical grid and read utilizing emitter array drivers

incorporate other passive components, active components or memory components, alone or in combination, including transistor networks, PROMs, ROMs, EPROMs, EEPROMs, gate arrays and PLAs to name a few.

Sensor Cable

FIGS. **44**A-B illustrate a sensor cable **4400** having an outer jacket **4410**, an outer shield **4420**, multiple outer wires **4430**, an inner jacket **4440**, an inner shield **4450**, a conductive polymer **4460** and an inner twisted wire pair **4470**. The outer wires **4430** are advantageously configured to compactly carry multiple drive signals to the emitter array **700** (FIG. **7**). In one embodiment, there are twelve outer wires **4430** corresponding to four anode drive signals **4501** (FIG. **45**), four cathode drive signals **4502** (FIG. **45**), two thermistor pinouts **1450** (FIG. **15**) and two spares. The inner twisted wire pair **4470** corresponds to the sensor signal **2500** (FIG. **25**) and is extruded within the conductive polymer **4460** so as to reduce triboelectric noise. The shields **4420**, **4450** and the twisted pair **4470** boost EMI and crosstalk immunity for the sensor signal **2500** (FIG. **25**).

Controller

FIG. **45** illustrates a sensor controller **4500** located in the monitor **100** (FIG. **1**) and configured to provide anode drive signals **4501** and cathode drive signals **4502** to the emitter array **700** (FIG. **7**). The DSP (digital signal processor) **4040**, which performs signal processing functions for the monitor, also provides commands **4042** to the sensor controller **4500**. These commands determine drive signal **4501**, **4502** levels and timing. The sensor controller **4500** has a command register **4510**, an anode selector **4520**, anode drivers **4530**, current DACs (digital-to-analog converters) **4540**, a current multiplexer **4550**, cathode drivers **4560**, a current meter **4570** and a current limiter **4580**. The command register **4510** provides control signals responsive to the DSP commands **4042**. In one embodiment, the command register **4510** is a shift register that loads serial command data **4042** from the DSP **4040** and synchronously sets output bits that select or enable various functions within the sensor controller **4500**, as described below.

As shown in FIG. **45**, the anode selector **4520** is responsive to anode select **4516** inputs from the command register **4510** that determine which emitter array row **810** (FIG. **8**) is active. Accordingly, the anode selector **4520** sets one of the anode on **4522** outputs to the anode drivers **4530**, which pulls up to Vcc one of the anode outputs **4501** to the emitter array **700** (FIG. **8**).

Also shown in FIG. **45**, the current DACs **4540** are responsive to command register data **4519** that determines the currents through each emitter array column **820** (FIG. **8**). In one embodiment, there are four, 12-bit DACs associated with each emitter array column **820** (FIG. **8**), sixteen DACs in total. That is, there are four DAC outputs **4542** associated with each emitter array column **820** (FIG. **8**) corresponding to the currents associated with each row **810** (FIG. **8**) along that column **820** (FIG. **8**). In a particular embodiment, all sixteen DACs **4540** are organized as a single shift register, and the command register **4510** serially clocks DAC data **4519** into the DACs **4540**. A current multiplexer **4550** is responsive to cathode on **4518** inputs from the command register **4510** and anode on **4522** inputs from the anode selector **4520** so as to convert the appropriate DAC outputs **4542** to current set **4552** inputs to the cathode drivers **4560**. The cathode drivers **4560** are responsive to the current set **4552** inputs to pull down to ground one to four of the cathode outputs **4502** to the emitter array **700** (FIG. **8**).

The current meter **4570** outputs a current measure **4572** that indicates the total LED current driving the emitter array **700** (FIG. **8**). The current limiter **4580** is responsive to the current measure **4572** and limits specified by the command register **4510** so as to prevent excessive power dissipation by the emitter array **700** (FIG. **8**). The current limiter **4580** provides an enable **4582** output to the anode selector **4520**. A Hi Limit **4512** input specifies the higher of two preset current limits. The current limiter **4580** latches the enable **4582** output in an off condition when the current limit is exceeded, disabling the anode selector **4520**. A trip reset **4514** input resets the enable **4582** output to re-enable the anode selector **4520**.

Sensor Assembly

As shown in FIG. **46**, the sensor **400** has an emitter shell **3800**, an emitter pad **3000**, a flex circuit assembly **2200**, a detector pad **3100** and a detector shell **3900**. A sensor cable **4400** attaches to the flex circuit assembly **2200**, which includes a flex circuit **2100**, an emitter assembly **500** and a detector assembly **2400**. The portion of the flex circuit assembly **2200** having the sensor cable **4400** attachment and emitter assembly **500** is housed by the emitter shell **3800** and emitter pad **3000**. The portion of the flex circuit assembly **2200** having the detector assembly **2400** is housed by the detector shell **3900** and detector pad **3100**. In particular, the detector assembly **2400** inserts into a shoe **3200**, and the shoe **3200** inserts into the detector pad **3100**. The emitter shell **3800** and detector shell **3900** are fastened by and rotate about hinge pins **410**, which insert through coils of a spring **3600**. The spring **3600** is held to the detector shell **3900** with a spring plate **3700**. A finger stop **450** attaches to the detector shell. In one embodiment, a silicon adhesive **420** is used to attach the pads **3000**, **3100** to the shells **3800**, **3900**, a silicon potting compound **430** is used to secure the emitter and detector assemblies **500**, **2400** within the pads **3000**, **3100**, and a cyanoacrylic adhesive **440** secures the sensor cable **4400** to the emitter shell **3800**.

A multiple wavelength sensor has been disclosed in detail in connection with various embodiments. These embodiments are disclosed by way of examples only and are not to limit the scope of the claims that follow. One of ordinary skill in art will appreciate many variations and modifications.

What is claimed is:

1. A physiological sensor configured to measure an indication of a physiological characteristic of a living patient, the physiological sensor comprising:

a plurality of light emitting sources arranged to impinge light on body tissue of a living patient, each light emitting source activated by addressing at least one of a plurality of rows and at least one of a plurality of columns of an electrical grid, the light emitting sources capable of transmitting light of a plurality of wavelengths, wherein there are fewer light emitting sources than intersections of the rows and columns;

a detector responsive to the transmitted light after attenuation by body tissue of the living patient, the body tissue including pulsating blood, wherein the detector is configured to generate a signal indicative of a physiological characteristic of the living patient; and

a sensor housing configured to position the plurality of light emitting sources and the detector with respect to the body tissue of the living patient.

2. The physiological sensor according to claim **1** wherein multiple ones of the light emitting sources are capable of transmitting light of the same wavelength, the multiple ones simultaneously activated by addressing one of the rows.

3. The physiological sensor according to claim 2 wherein:
the light emitting sources are LEDs, and
each of the LEDs have an anode in common with one of the rows and a cathode in common with one of the columns so that driving one of the rows and one of the columns activates a unique one of the LEDs.

4. The physiological sensor according to claim 3 further comprising:
a plurality of row drivers in communication with the rows; and
a plurality of column drivers in communication with the columns,
wherein a selected row driver sources current to a corresponding row and selected column driver sinks current from a corresponding column so as to activate an addressed one of the LEDs.

5. The physiological sensor according to claim 4 wherein deselected ones of the row drivers pull corresponding rows to a low voltage via a functional switch configured to operably connect deselected rows to a low voltage source and deselected ones of the column drivers pull corresponding columns to a high voltage via a functional switch configured to operably connect deselected columns to a high voltage source so as to substantially block parasitic current from unaddressed ones of the LEDs.

6. The physiological sensor according to claim 5 wherein the electrical grid comprises at least three rows or at least three columns.

7. The physiological sensor according to claim 5 wherein the electrical grid communicates with at least eight LEDs.

8. The physiological sensor of claim 1, wherein the plurality of light emitting sources and the detector are coupled to a flex circuit.

9. The physiological sensor of claim 1, wherein the plurality of light emitting sources are arranged to minimize optical pathlength differences.

10. The physiological sensor of claim 1, wherein the plurality of light emitting sources are arranged to facilitate equalization.

11. The physiological sensor of claim 1, wherein the electrical grid is arranged so as to prevent parasitic currents from unwanted activation of the light emitting sources.

12. The physiological sensor of claim 1, wherein the light emitting sources correspond to multiple different wavelengths of light, the light sources being arranged in clusters corresponding to said wavelengths.

13. The physiological sensor of claim 12, wherein the light sources are arranged in clusters corresponding to said wavelengths so as to minimize pathlength variations.

14. The physiological sensor of claim 12, wherein the light sources are arranged in clusters corresponding to said wavelengths so as to facilitate equalization of intensities.

15. The physiological sensor of claim 12, wherein the light emitting sources are further configured to comprise wavelengths usable to measure two or more of HbCO, METHb, and SpO_2.

16. A method for measuring a physiological characteristic of a living patient, the method comprising:
positioning a sensor with respect to body tissue of a living patient, the sensor comprising a plurality of light emitting sources arranged to impinge light on the body tissue and a detector, the light emitting sources being arranged in an electrical grid comprising rows and columns, wherein there are fewer light emitting sources than intersections of the rows and columns;
activating the plurality of light emitting sources, said activating each light emitting source comprising addressing at least one of the rows and at least one of the columns of the electrical grid, such that a plurality of wavelengths of light are emitted from the plurality of light emitting sources;
detecting the light with the detector after attenuation by the body tissue of the living patient, the body tissue comprising pulsating blood; and
generating a signal reflecting a physiological characteristic of the living patient responsive to the detected light.

17. The method of claim 16, wherein the electrical grid is arranged so as to prevent parasitic currents from unwanted activation of the light emitting sources.

18. The method of claim 16, further comprising connecting deselected columns to a voltage source to substantially block parasitic current from unaddressed ones of the light emitting sources.

19. The method of claim 16, wherein the light emitting sources correspond to multiple different wavelengths of light, the light sources being arranged in clusters corresponding to said wavelengths.

20. The method of claim 19, wherein the light sources are arranged in said clusters corresponding to said wavelengths so as to minimize pathlength variations.

21. The method of claim 19, wherein the light sources are arranged in said clusters corresponding to said wavelengths so as to facilitate equalization of intensities.

22. The method of claim 16, wherein the light emitting sources are further configured to emit wavelengths adapted to measure two or more of HbCO, METHb, and SpO_2.

* * * * *

UNITED STATES PATENT AND TRADEMARK OFFICE

CERTIFICATE OF CORRECTION

PATENT NO. : 7,764,982 B2
APPLICATION NO. : 11/367013
DATED : July 27, 2010
INVENTOR(S) : Smith et al.

It is certified that error appears in the above-identified patent and that said Letters Patent is hereby corrected as shown below:

On the Title Page, Item (12) "Dalke et al." should read --Smith et al.--

On the Title Page, Item (75) Inventors: should read --Robert Smith, Lake Forest, CA (US); David Dalke, Irvine, CA (US); Ammar Al-Ali, Tustin, CA (US); Mohamed Diab, Mission Viejo, CA (US); Marcelo Lamego, Rancho Santa Margarita, CA (US)--

Signed and Sealed this
Twenty-eighth Day of February, 2012

David J. Kappos

David J. Kappos
Director of the United States Patent and Trademark Office