UNITED STATES PATENT AND TRADEMARK OFFICE

BEFORE THE PATENT TRIAL AND APPEAL BOARD

_____

SAMSUNG ELECTRONICS CO., LTD.,
SAMSUNG ELECTRONICS AMERICA, INC.,
FOSSIL GROUP, INC.,
FOSSIL STORES I, INC.,
FOSSIL PARTNERS, L.P.,
OURA HEALTH OY, AND
ONEPLUS TECHNOLOGY (SHENZHEN) CO., LTD.

Petitioners,

v.

OMNI MEDSCI, INC.,

Patent Owner.

_____

Case IPR2025-01252
Patent No. 11,160,455

_____

PETITION FOR *INTER PARTES* REVIEW

TABLE OF CONTENTS

Page

I. INTRODUCTION 1
II. MANDATORY NOTICES UNDER 37 C.F.R. §42.8 3
A. Real Party-in-Interest 3
B. Related Matters 3
C. Lead and Back-Up Counsel 5
III. PAYMENT OF FEES 6
IV. REQUIREMENTS FOR *INTER PARTES* REVIEW 7
A. Grounds for Standing 7
B. Identification of Challenge 7
1. The Specific Art on Which the Challenge Is Based 7
2. Statutory Grounds on Which the Challenge Is Based 8
V. ’455 PATENT AND PROSECUTION HISTORY 8
A. ’455 8
B. Prosecution History 10
VI. §325(d) AND §314(a) DISCRETION DOES NOT APPLY 11
A. §325(d) 11
B. §314(a) 12
VII. LEVEL OF ORDINARY SKILL IN THE ART 15
VIII. CLAIM CONSTRUCTION 15
A. “light source” limitations ([7], [14], [20]) 16
B. “to detect an object” limitation ([19]) 17
C. Additional Terms Discussed in ’484 and ’533 IPRs and District Courts 17
IX. GROUNDS OF UNPATENTABILITY 18
A. Collateral Estoppel Applies to Most of the Challenged Claims 18
B. Ground 1: Lisogurski in combination with knowledge of a POSITA (Claims 1, 8, 11) 20

1. Overview of Lisogurski 20
2. Motivation to Modify Lisogurski 25
3. Claim Limitations 28
C. Ground 2: Lisogurski in view of LeBoeuf (Claims 2-4, 9-10, 15-17) 51
1. Overview of LeBoeuf 51
2. Motivation to Combine Lisogurski and LeBoeuf 52
3. Claim Limitations 55
D. Grounds 3-4: Grounds 1-2 in further view of Tran (Claims 1, 5-8, 12-15, 18-20) 60
1. Overview of Tran 60
2. Motivation to Combine Lisogurski (alone or in view of LeBoeuf) and Tran 61
3. Claim Limitations 64
E. Grounds 5-8: Grounds 1-4 in further view of Carlson (claims 1-20) 73
1. Overview of Carlson 73
2. Motivation to Combine 75
3. Claim Limitations 78
X. SECONDARY CONSIDERATIONS 80
XI. CONCLUSION 81

EXHIBIT LIST

Exhibit No.	DESCRIPTION
1001	U.S. Patent No. 11,160,455 ("'455")
1002	File History of U.S. Application No. 17/078,771 ("'455FH")
1003	Declaration of Brian Anthony in Support of Petition for Inter Partes Review of U.S. Patent No. 11,160,455, ("Anthony")
1004	Declaration of Brian Anthony in Support of Petition for Inter Partes Review of U.S. Patent No. 9,651,533 submitted in IPR2019-00916, Ex. 1003 ("'533-Anthony")
1005	*Apple Inc. v. Omni Medsci, Inc.*, No. IPR2019-00916, Paper 1 (P.T.A.B. Apr. 10, 2019) ("'533-Pet.")
1006	*Apple Inc. v. Omni Medsci, Inc.*, No. IPR2019-00916, Paper 23 (P.T.A.B. Jan. 31, 2020) ("'533-POR")
1007	*Apple Inc. v. Omni Medsci, Inc.*, No. IPR2019-00916, Paper 16 (P.T.A.B. Oct. 18, 2019) ("'533-Inst.")
1008	*Apple Inc. v. Omni Medsci, Inc.*, No. IPR2019-00916, Paper 39 (P.T.A.B. Oct. 14, 2020) ("'533-FWD")
1009	*Omni MedSci, Inc. v. Apple Inc.*, No. 21-01229, ECF 69 (Fed. Cir. June 8, 2022)
1010	Declaration of Brian Anthony in Support of Petition for Inter Partes Review of U.S. Patent No. 10,517,484 submitted in IPR2021-00453, Ex. 1003 ("'484-Anthony")
1011	*Apple Inc. v. Omni Medsci, Inc.*, No. IPR2021-00453, Paper 1 (P.T.A.B. Jan. 22, 2021) ("'484-Pet.")
1012	*Apple Inc. v. Omni Medsci, Inc.*, No. IPR2021-00453, Paper 10 (P.T.A.B. Nov. 12, 2021) ("'484-POR")
1013	*Apple Inc. v. Omni Medsci, Inc.*, No. IPR2021-00453, Paper 7 (P.T.A.B. Aug. 6, 2021) ("'484-Inst.")
1014	*Apple Inc. v. Omni Medsci, Inc.*, No. IPR2021-00453, Paper 11 (P.T.A.B. Feb. 4, 2022) ("'484-Pet.-Reply")
1015	*Apple Inc. v. Omni Medsci, Inc.*, No. IPR2021-00453, Paper 22 (P.T.A.B. Aug. 3, 2022) ("'484-FWD")
1016	*Apple Inc. v. Omni Medsci, Inc.*, No. IPR2021-00453, Paper 26 (P.T.A.B. Feb. 14, 2025) ("'484-RFWD")

Exhibit No.	DESCRIPTION
1017	*Apple Inc. v. Omni MedSci, Inc.*, No. 23-01034, ECF 44 (Fed. Cir. June 21, 2024)
1018	*Omni MedSci, Inc. v. Apple Inc.*, 2:18-cv-00134-RWS, Dkt. No. 211 (E.D. Tex. June 24, 2019)
1019	*Omni MedSci, Inc. v. Apple Inc.*, 2:18-cv-00429-RWS, Dkt. No. 152 (E.D. Tex. Aug. 14, 2019)
1020	Second Amended Docket Control Order, June 16, 2025. *Omni MedSci, Inc. v. Samsung Electronics Co., Ltd. et al.*, No. 2:24-cv-01070-JRG-RSP (E.D. Tex.)
1021	Reserved
1022	Reserved
1023	Defendants' Supplemental Invalidity and Subject Matter Eligibility Contentions, July 18, 2025. *Omni MedSci, Inc. v. Samsung Electronics Co.*, Ltd. et al., No. 2:24-cv-01070-JRG-RSP (E.D. Tex.)
1024	Reserved
1025	U.S. Patent No. 9,241,676 ("Lisogurski")
1026	U.S. Patent Pub. No. 2010/0217102 ("LeBoeuf")
1027	U.S. Patent No. 8,108,036 ("Tran")
1028	U.S. Patent Pub. No. 2005/0049468A1 ("Carlson")
1029	Reserved
1030	U.S. Patent No. 7,029,628 ("Tam")
1031	U.S. Patent No. 8,050,730 ("Zhang")
1032	U.S. Patent No. 8,821,397 ("Al-Ali")
1033	U.S. Patent Pub. No. 2011/0237911 ("Lamego")
1034	U.S. Patent No. 5,942,749 ("Takeuchi")

Exhibit No.	DESCRIPTION
1035	U.S. Patent No. 5,822,473 ("Magel")
1036	US Patent 5,592,124 ("Mullins")
1037	E.F. Schubert, Light-Emitting Diodes (Cambridge Univ. Press, 2nd ed. reprinted 2014)
1038	Joseph D. Bronzino, The Biomedical Engineering Handbook (1995)
1039	U.S. Patent No. 8,079,735 ("Vakil")
1040	Reserved
1041	U.S. Patent Pub. No. 2012/0197093 ("Valencell-093")
1042	U.S. Patent No. 8,862,196 ("Lynn")
1043	U.S. Patent No. 8,412,655 ("Colman")
1044	U.S. Patent No. 5,511,553 ("Segalowitz")
1045	U.S. Patent No. 6,801,799 ("Mendelson")
1046	U.S. Patent No. 6,662,033 ("Casciani")
1047	U.S. Patent No. 5,028,787 ("Rosenthal")
1048	U.S. Pat. No. 9,239,951 ("Hoffberg")
1049	U.S. Pat. Pub. 2007/0194939 ("Alvarez")
1050	U.S. Patent No. 8,364,226 ("Diab")
1051	U.S. Patent No. 6,931,269 ("Terry")
1052-1058	Reserved
1059	U.S. Patent No. 5,497,769 ("Gratton")
1060	U.S. Patent No. 5,827,182 ("Raley")

Exhibit No.	DESCRIPTION
1061	U.S. Patent No. 7,764,982 (“Dalke”)
1062-63	Reserved
1064	U.S. Patent No. 5,554,273 (“Demmin”)
1065	U.S. Patent No. 5,953,713 (“Behbehani”)
1066-76	Reserved
1077	U.S. Patent Publication No. 2006/0184040 (“Keller”)
1078-1080	Reserved
1081	US. Patent No. 9,651,533 (“’533”)
1082	U.S. Patent No. 10,517,484 (“’484”)
1083	Reserved
1084	Declaration of Jonathan Bradford

TABLE OF ABBREVIATIONS

Abbreviation	DESCRIPTION
Claims / Challenged Claims	Claims 1-20 of the ’455
IPR	*Inter Partes* Review
Petitioners	Petitioners Samsung Electronics Co. Ltd., Samsung Electronics America Inc., Fossil Group, Inc., Fossil Stores I, Inc., Fossil Partners, L.P., Oura Health Oy, and OnePlus Technology (Shenzhen) Co., Ltd.
PO	Patent Owner
POSITA	Person of Ordinary Skill in the Art
Board	Patent Trial and Appeal Board
EDTX	Eastern District of Texas
Texas Case	*Omni MedSci, Inc. v. Samsung Electronics Co., Ltd. et al.*, No. 2:24-cv-01070-JRG-RSP (E.D. Tex.)
’533-IPR	*Apple Inc. v. Omni Medsci, Inc.*, No. IPR2019-00916 (P.T.A.B.)
’484-IPR	*Apple Inc. v. Omni Medsci, Inc.*, No. IPR2021-00453 (P.T.A.B.)

LIST OF CHALLENGED CLAIMS

[1.pre] A system for measuring one or more physiological parameters and for use with a smart phone or tablet, the system comprising:

[1.a] a wearable device adapted to be placed on teeth, a wrist, or an ear of a user, and

[1.b] including a light source comprising a driver and a plurality of semiconductor sources, the plurality of semiconductor sources configured to generate an output optical light having a plurality of optical wavelengths;

[1.c] the wearable device comprising one or more lenses configured to receive at least a portion of the output optical light and to deliver a lens output light to tissue;

[1.d] the wearable device further comprising a detection system configured to receive at least a portion of the lens output light reflected from the tissue and to generate an output signal having a signal-to-noise ratio,

[1.e] wherein the detection system is configured to be synchronized to the light source;

[1.f] wherein the detection system comprises a plurality of detectors that are spatially separated from each other, and wherein at least one analog to digital converter is coupled to at least one of the spatially separated detectors;

[1.g] the smart phone or tablet comprising a wireless receiver, a wireless transmitter, a display, a speaker, a voice input module, a microprocessor and a touch

screen, the smart phone or tablet configured to receive and process at least a portion of the output signal, wherein the smart phone or tablet is configured to store and display the processed output signal, and wherein at least a portion of the processed output signal is configured to be transmitted over a wireless transmission link;

[1.h] wherein the output signal is indicative of one or more of the physiological parameters;

[1.i] the wearable device configured to increase the signal-to-noise ratio by increasing light intensity of at least one of the semiconductor sources from an initial light intensity;

[1.j] the detection system further configured to: generate a first signal responsive to light received while the semiconductor sources are off,

[1.k] generate a second signal responsive to light received while at least one of the semiconductor sources is on; and

[1.l] increase the signal-to-noise ratio by comparing the first signal and the second signal; and

[1.m] wherein the plurality of optical wavelengths comprises three optical wavelengths for measuring at least a portion of the one or more of the physiological parameters, wherein the optical wavelengths comprise near infrared or visible wavelengths.

[2] The system of claim 1, wherein the plurality of semiconductor sources comprises six light emitting diodes, and wherein the plurality of semiconductor sources and the plurality of spatially separated detectors are located on one or more arcs.

[3] The system of claim 2, wherein the output optical light comprises wavelengths between 600 nm and 1000 nm to measure a level of oxy-hemoglobin and deoxy-hemoglobin.

[4] The system of claim 3, wherein the output signal corresponding to at least one of the optical wavelengths is used to improve measurement of at least one of the one or more physiological parameters using the output signal corresponding to the other two optical wavelengths.

[5.a] The system of claim 4, wherein the system is configured to use artificial intelligence to process some of the at least a portion of the output signal; and

[5.b] wherein the system is configured to perform pattern identification or classification, or wherein the system is configured to apply one or more regression signal processing methodologies to at least a part of the output signal.

[6] The system of claim 5, wherein the wearable device further comprises a reflective surface to receive and redirect at least some of the output optical light from the plurality of semiconductor sources.

[7] The system of claim 6, wherein the wearable device is further configured to increase the signal-to-noise ratio by increasing a pulse rate of at least one of the semiconductor sources from an initial non-zero pulse rate.

[8.pre] A system for measuring one or more physiological parameters and for use with a smart phone or tablet, the system comprising:

[8.a] a wearable device adapted to be placed on a wrist or an ear of a user,

[8.b] including a light source comprising a driver and a plurality of semiconductor sources that are light emitting diodes, the light emitting diodes configured to generate an output optical light having one or more optical wavelengths;

[8.c] the wearable device comprising one or more lenses configured to receive at least a portion of the output optical light and to deliver a lens output light to tissue;

[8.d] the wearable device further comprising a detection system configured to receive at least a portion of the lens output light reflected from the tissue and to generate an output signal having a signal-to-noise ratio,

[8.e] wherein the detection system is configured to be synchronized to the light source;

[8.f] wherein the detection system comprises a plurality of detectors that are spatially separated from each other, and wherein at least one analog to digital

converter is coupled to at least one of the spatially separated detectors;

[8.g] the smart phone or tablet comprising a wireless receiver, a wireless transmitter, a display, a microphone, a speaker, a microprocessor and a touch screen, the smart phone or tablet configured to receive and process at least a portion of the output signal, wherein the smart phone or tablet is configured to store and display the processed output signal, and wherein at least a portion of the processed output signal is configured to be transmitted over a wireless transmission link;

[8.h] wherein the output signal is indicative of one or more of the physiological parameters;

[8.i] the wearable device configured to increase the signal-to-noise ratio by increasing light intensity of at least one of the plurality of semiconductor sources from an initial light intensity; and

[8.j] the detection system further configured to: generate a first signal responsive to light received while the light emitting diodes are off,

[8.k] generate a second signal responsive to light received while at least one of the light emitting diodes is on, and

[8.l] increase the signal-to-noise ratio by comparing the first signal and the second signal; and

[8.m] wherein the plurality of semiconductor sources comprises six light

emitting diodes.

[9] The system of claim 8, wherein the plurality of semiconductor sources and the plurality of spatially separated detectors are located on one or more arcs.

[10] The system of claim 9, wherein the output optical light comprises three optical wavelengths for measuring at least a portion of the one or more of the physiological parameters, and wherein the optical wavelengths comprise near infrared and visible wavelengths.

[11] The system of claim 8, wherein the output optical light comprises wavelengths between 600 nm and 1000 nm to measure a level of oxy-hemoglobin and deoxy-hemoglobin, and wherein the output signal corresponding to at least one of the optical wavelengths is used to improve measurement of the one or more physiological parameters using the output signal corresponding to the other two optical wavelengths.

[12] The system of claim 11 wherein the system is configured to use artificial intelligence in making decisions associated with some of the at least a portion of the output signal; and wherein the system is configured to perform pattern identification or classification, or wherein the system is configured to apply one or more regression signal processing methodologies to at least a part of the output signal.

[13] The system of claim 12, wherein the wearable device further comprises

a reflective surface positioned to receive and redirect at least some of the output optical light from the plurality of semiconductor sources.

[14] The system of claim 13, wherein the wearable device is further configured to increase the signal-to-noise ratio by increasing a pulse rate of at least one of the semiconductor sources from an initial non-zero pulse rate.

[15.pre] A system for measuring one or more physiological parameters and for use with a smart phone or tablet, the system comprising:

[15.a] a wearable device adapted to be placed on teeth, a wrist, or an ear of a user,

[15.b] including a light source comprising a driver and a plurality of semiconductor sources that are light emitting diodes, the light emitting diodes configured to generate an output optical light having one or more optical wavelengths;

[15.c] the wearable device comprising one or more lenses configured to receive at least a portion of the output optical light and to deliver a lens output light to tissue;

[15.d] the wearable device further comprising a detection system configured to receive at least a portion of the lens output light reflected from the tissue and to generate an output signal having a signal-to-noise ratio,

[15.e] wherein the detection system is configured to be synchronized to the light source;

[15.f] wherein the detection system comprises a plurality of detectors that are spatially separated from each other, and wherein at least one analog to digital converter is coupled to at least one of the spatially separated detectors;

[15.g] the smart phone or tablet comprising a wireless receiver, a wireless transmitter, a display, a microphone, a speaker, a microprocessor and a touch screen, the smart phone or tablet configured to receive and process at least a portion of the output signal, wherein the smart phone or tablet is configured to store and display the processed output signal, and wherein at least a portion of the processed output signal is configured to be transmitted over a wireless transmission link;

[15.h] wherein the output signal is indicative of one or more of the physiological parameters;

[15.i] the wearable device configured to increase the signal-to-noise ratio by increasing light intensity of at least one of the plurality of semiconductor sources from an initial light intensity; and

[15.j] the detection system further configured to: generate a first signal responsive to light received while the light emitting diodes are off,

[15.k] generate a second signal responsive to light received while at least one

of the light emitting diodes is on, and

[15.l] increase the signal-to-noise ratio by comparing the first signal and the second signal;

[15.m] wherein the plurality of semiconductor sources comprises six light emitting diodes, and

[15.n] wherein the plurality of semiconductor sources and the plurality of spatially separated detectors are located on one or more arcs; and

[15.o] wherein the output optical light comprises wavelengths between 600 nm and 1000 nm to measure a level of oxy-hemoglobin and deoxy-hemoglobin.

[16] The system of claim 15, wherein the output optical light comprises three optical wavelengths for measuring at least a portion of the one or more of the physiological parameters, and wherein the output signal corresponding to at least one of the optical wavelengths is used to improve measurement of at least one of the one or more physiological parameters using the output signal corresponding to the other two optical wavelengths.

[17] The system of claim 16, wherein the wearable device further comprises a reflective surface to receive and redirect at least some of the output optical light from the plurality of semiconductor sources.

[18] The system of claim 17, wherein the system is configured to use artificial

intelligence in making decisions associated with some of the at least a portion of the output signal; and wherein the system is configured to perform pattern identification or classification, or wherein the system is configured to apply one or more regression signal processing methodologies to at least a part of the output signal.

[19] The system of claim 18, wherein the system is at least in part configured to detect an object, and a property of at least some of the output signal is compared by at least one of the wearable device, the smart phone, and the tablet to a threshold.

[20] The system of claim 19, wherein the wearable device is further configured to increase the signal-to-noise ratio by increasing a pulse rate of at least one of the semiconductor sources from an initial non-zero pulse rate.

Pursuant to §§311-319 and §42.1,[1] Samsung Electronics Co. Ltd., Samsung Electronics America Inc., Fossil Group, Inc., Fossil Stores I, Inc., Fossil Partners, L.P., Oura Health Oy, and OnePlus Technology (Shenzhen) Co., Ltd. ("Petitioners") respectfully petition for *inter partes* review of claims 1-20 ("Claims" or "Challenged Claims") of U.S. Patent No. 11,160,455 (Ex.1001, "'455"). There is a reasonable likelihood—and it is highly likely—that at least one Challenged Claim is unpatentable as explained herein. Petitioners request review of the Claims and judgment finding them unpatentable under §103.

I. INTRODUCTION

The Board found claim limitations identical and/or substantially identical to those in the '455 unpatentable in IPR2019-00916 ('533-IPR) and IPR2021-00453 ('484-IPR). *See generally* §§IX.B-E; Anthony, ¶¶9-12, 42-43, 69-448. Estoppel thus precludes Patent Owner Omni MedSci, Inc. ("PO" or "Omni") from relitigating unpatentability of those identical or substantially identical limitations in the '455. *See Samsung Elecs. Co., Ltd. v. Netlist, Inc.*, No. IPR2025-00002, Paper 17 at 17-24

[1] Section cites are to 35 U.S.C. (pre-AIA) or 37 C.F.R. as context indicates. All emphasis/annotations added unless noted. Figure annotations herein generally quote the Claims for reference. Citations herein are exemplary and not meant to be limiting.

(PTAB May 15, 2025) ("Patent Owner is collaterally estopped" based on FWDs relying on the same ground to find "substantially similar" limitations in related patents obvious).

Like the claims at issue in the '533-/'484-IPRs, the '455 is generally directed to a physiological measurement system comprising a wearable **measurement device** with light sources and detectors to generate an output signal with physiological parameters to be transmitted to a **smart phone/tablet** which communicates processed data to **cloud based server** for additional processing, and common techniques to improve signal-to-noise ratio of such signals. '455, 21:36-57, 35:63-37:56, 59:4-25, 71:21-40, 80:29-35. Anthony, ¶¶40-43.

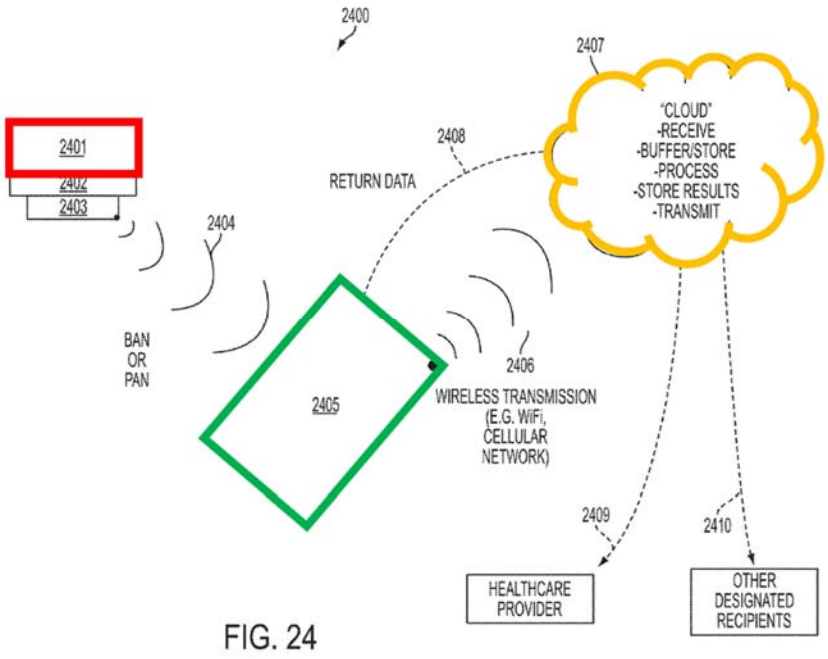

FIG. 24

'455, FIG. 24. Anthony, ¶44.

Additional limitations in the ’455 Claims at most recite a common location to place a wearable device, a generic driver circuit for light sources, generic measurement/comparison using multiple wavelengths, common configurations/characteristics for light sources and detectors, and common analytical methods. *See generally* §§IX.B-E. All such additional limitations were well-known in the art. *See generally* §§IX.B-E. Anthony, ¶¶40-43.

Accordingly, Petitioners request that the Board institute trial and find the Claims unpatentable.

II. MANDATORY NOTICES UNDER 37 C.F.R. §42.8

A. Real Party-in-Interest

Petitioners Samsung Electronics Co. Ltd., Samsung Electronics America, Inc., Fossil Group, Inc., Fossil Stores I, Inc., Fossil Partners, L.P., Oura Health Oy, and OnePlus Technology (Shenzhen) Co., Ltd., in addition to Ouraring, Inc. and Guangdong OPPO Mobile Telecommunications Corp., Ltd., are the real parties-in-interest. No other party had access to or control over the present Petition, and no other party funded or participated in preparation of the present Petition.

B. Related Matters

The ’455 is the subject of the following co-pending civil actions:

- *Omni Medsci, Inc. v. Samsung Electronics. Co., Ltd. et al.*, 2:24-cv-01070-JRG-RSP (E.D. Tex) (“Texas Case”); and

- *Omni MedSci, Inc. v. Whoop, Inc.*, 1:25-cv-00140-JLH (D. Del.).

The ’484, which is related to the ’455, is also subject to the following appeal: *Omni Medsci, Inc. v. Apple, Inc.*, No. 25-1646 (Fed. Cir.).

Petitioners are concurrently filing petitions for IPR of the related U.S. Patent Nos. 9,651,533 (IPR2025-01250), 10,874,304 (IPR2025-01251), 12,193,790 (IPR2025-01253), 12,268,475 (IPR2025-01254), and petitions for PGR of the related U.S. Patent Nos. 12,268,475 (PGR2025-00063) and 12,193,790 (PGR2025-00064). Petitioners are further concurrently filing a petition for IPR of U.S. Patent 9,055,868 (IPR2025-01249) asserted in the Texas Case.

C. Lead and Back-Up Counsel

Lead Counsel	Backup Counsel
James L. Davis, Jr. Reg. No. 57,325 **ROPES & GRAY LLP** 525 University Avenue, 8th Floor Palo Alto, CA 94301 Phone: +1-650-617-4000 Fax: +1-617-235-9492 james.l.davis@ropesgray.com Samsung-Omni-Ropes-IPR-Service@ropesgray.com **Mailing address for all PTAB correspondence:** ROPES & GRAY LLP IPRM—Floor 43 Prudential Tower 800 Boylston Street Boston, Massachusetts 02199-3600	Hyun-Joong Kim Reg. No. 79,936 **ROPES & GRAY LLP** 1211 Avenue of the Americas New York, NY 10036 Phone: +1 212-596-9000 Fax: +1-617-235-9492 Daniel.Kim@ropesgray.com Frances Zhang Reg. No. 73,589 **ROPES & GRAY LLP** 2099 Pennsylvania Avenue, N.W. Washington, DC 20006-6807 Phone: +1-202-508-4600 Fax: +1-617-235-9492 frances.zhang@ropesgray.com
	Jasjit S. Vidwan Reg. No. 72,080 **MAYER BROWN LLP** 1999 K Street, NW Washington, DC 20006-1101 Tel.: 202.263.3065 JVidwan@mayerbrown.com Robert G. Pluta Reg. No. 50,970 **MAYER BROWN LLP** 71 S. Wacker Drive Chicago, IL 60606 Tel.: 312.701.8641 RPluta@mayerbrown.com

Lead Counsel	Backup Counsel
	Jared A. Smith Reg. No. 73,749 **FISH & RICHARDSON P.C.** 12860 El Camino Real, Suite 400 San Diego, CA 92130 Phone: +1 858-678-4702 Fax: +1 858-678-5099 jasmith@fr.com Ricardo J. Bonilla Reg. No. 65,190 **FISH & RICHARDSON P.C.** 1717 Main Street, Suite 5000 Dallas, TX 75201 Phone: +1 214-760-6150 Fax: +1 214-747-2091 rbonilla@fr.com
	Jack Shaw Reg. No. 72,262 **CHERRY JOHNSON SIEGMUND JAMES PC** 8140 Walnut Hill Lane, Suite 105 Dallas, Texas 75231 Tel: 254-732-2242 Fax: 866-627-3509 jshaw@cjsjlaw.com

Petitioners consent to electronic service of documents to the email addresses identified above.

III. PAYMENT OF FEES

The undersigned authorizes the Office to charge the fee required by §42.15(a) and any additional fees that might be due to Deposit Account No. 18-1945, under

Order No. 110797-0060-655.

IV. REQUIREMENTS FOR *INTER PARTES* REVIEW

A. Grounds for Standing

Pursuant to §42.104(a), Petitioners certify the ’455 is available for IPR. Petitioners and any real parties-in-interest are not barred or estopped from requesting IPR challenging the Claims on the grounds identified herein.

B. Identification of Challenge

Pursuant to §§42.104(b) and (b)(1), Petitioners request IPR of the Claims and that the Board cancel the same as unpatentable.

1. The Specific Art on Which the Challenge Is Based

Petitioners rely upon the following art (Anthony, ¶¶69-71):

Name	Ex.	Publication	Filed	Published/ Issued	Prior art under at least
Lisogurski	1025	US 9,241,676	5/31/2012	1/26/2016	§102(e)
LeBoeuf	1026	US 2010/0217102	1/21/2010	8/26/2010	§102(b)
Tran	1027	US 8,108,036	6/18/2009	1/31/2012	§102(e)
Carlson	1028	US 2005/0049468	9/3/2003	3/3/2005	§102(b)

Each of the above references is prior art to the Claims based on 12/31/2012,

the earliest provisional application priority date listed in the ’455’s priority claim.[2]

2. Statutory Grounds on Which the Challenge Is Based

Ground	Claim(s)	Basis	References
1	1, 8, 11	§103	**Lisogurski**
2	2-4, 9-10, 15-17		**Lisogurski** in view of **LeBoeuf**
3	1, 8, 12, 15		**Lisogurski** in view of **Tran**
4	5-7, 13-14, 18-20		**Lisogurski** in view of **LeBoeuf** and **Tran**
5-8	*see* Grounds 1-4		**Grounds 1-4** optionally in view of **Carlson**

V. ’455 PATENT AND PROSECUTION HISTORY

A. ’455

’455 Figure 24 shows an embodiment of the physiological measurement system:

[2] If AIA applies, these references are prior art under §102(a)(1) and/or §102(a)(2) for the same reason. Petitioners take no position as to the appropriate priority date of the ’455.

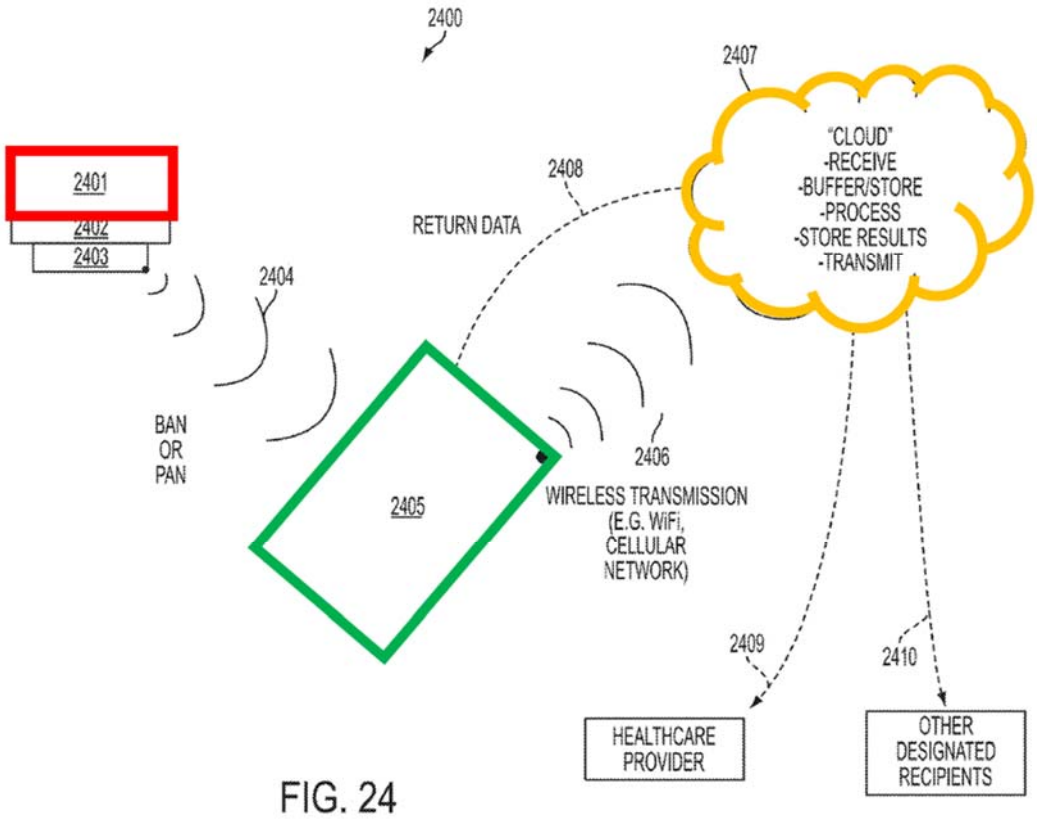

FIG. 24

'455, 36:19-37:57. Wearable **measurement device 2401** with processor 2402 and transmitter 2403 communicates measurements to **smart phone/tablet 2405**. '455, 36:18-38. An application program in **smart phone/tablet 2405** processes the measurement and communicates the processed data to **cloud based server 2407** for additional processing, e.g., pattern matching algorithms. *See* '455, 35:63-37:51. Anthony, ¶44.

Wearable device 2401 can be placed on a user's body and includes semiconductor sources that generate an output optical light with a plurality of optical wavelengths, and a driver for the same. '455, 8:29-36. **Wearable device 2401**

further comprises lenses to receive and direct light from the semiconductor sources to the user's tissue, and a detection system that receives the light reflected from the tissue and to generate an output signal having a signal-to-noise ratio. '455, 8:36-42. The detection system comprises spatially separated detectors which, along with the semiconductor sources, can be located on an arc. '455, 8:44-47, 9:47-50. The '455 describes several common techniques to improve signal processing to select the constituents of interest, including using increased light intensity, modulation, lock-in, and dark subtraction techniques. '455, 21:36-57, 59:4-25, 71:21-40, 80:29-35. Anthony, ¶¶45-46.

B. Prosecution History

The '455 issued from U.S. Pat. App. 17/078,771, filed 10/23/2020. Following an Examiner interview, the Applicant filed a terminal disclaimer in view of the '484, and other related patents. '455FH, 378-383, 396. The pending claims were then allowed. '455FH, 386-395. The Applicant made further claim amendments after the allowance, and the Claims were again allowed without a rejection. '455FH, 601-609, 638-645. In both Notices of Allowance, the Examiner noted that the prior art does not disclose (1) "…detection system…synchronized to the light source," (2) "…detection system comprises a plurality of detectors that are spatially separated…" (3) "…analog to digital converter…coupled to…spatially separated detectors," (4) "…output signal…configured to be transmitted over a wireless

transmission link," (5) "output…indicative of…physiological parameters," (6) "…increase the signal-to-noise ratio by increasing light intensity…" (7) "…increase the signal-to-noise ratio by comparing the first signal [responsive to light when LEDs are off] and the second signal [responsive to light when a LED is on]," (8) "…six light emitting diodes," (9) "…semiconductor sources and…detectors are located on one or more arcs" and (10) "…output optical light…between 600nm and 1000nm to monitor…of oxy-hemoglobin and deoxyhemoglobin." '455FH, 386-395, 638-645. As set forth below, **Lisogurski** alone or in view of **LeBoeuf**, **Tran**, and/or **Carlson** discloses each such limitations. *See* §§IX.B-E. Anthony, ¶¶47-50.

VI. §325(D) AND §314(A) DISCRETION DOES NOT APPLY

A. §325(d)

Under the *Advanced Bionics* framework, there is no basis for discretionary denial under §325(d) as **the grounds raised by this Petition are not the same or substantially the same as the art and arguments raised during prosecution of the '455**. *Advanced Bionics, LLC v. MED-EL Elektromedizinische Geräte GmbH*, IPR2019-01469, Paper 6 at 8 (PTAB, Feb. 13, 2020) (precedential). The Examiner did not consider the references relied upon in this Petition. Although **Lisogurski**, **LeBoeuf**, **Tran**, and **Carlson** were cited in an IDS ('455FH, 279, 282, 310, 370), and while the '484-Anthony, '484-Pet., '533-Anthony, '533-Pet., and '533-FWD

were also cited in an IDS ('455FH, 350, 365, 371, 416), none of them were relied on by the Examiner.

Even if the art and arguments were substantially the same, the Examiner erred in a manner material to the patentability of the Claims. Where the "Examiner did not expressly consider" **Lisogurski**, **LeBoeuf**, **Tran**, or **Carlson**, it is difficult, if not impossible to explain "why the Examiner allowed the claims" or "how the Examiner might have considered the arguments presented in the Petition." *Bowtech, Inc. v. MCP IP, LLC*, IPR2019-00379, Paper 14 at 20 (PTAB July 3, 2019) (not exercising §325(d) discretion). If the Examiner had considered substantially the same art or arguments, it was error to allow the claims because, *e.g.*, the Examiner failed to reject the Claims over references or combinations of references teaching each of the limitations that the Examiner found not disclosed in the prior art (§V.B). *See* §§IX.B-E. Indeed, the Board in the '484-IPR and '533-IPR found unpatentable limitations identical or substantially identical to those in the Claims based on **Lisogurski**, **Tran**, and **Carlson**, as applied herein (*see* §§IX.B-E (citing prior FWDs)). It was material error for the Examiner to fail to apply the same grounds during prosecution. Anthony, ¶¶47-50.

The Board should not deny institution under §325(d).

B. §314(a)

The Texas Case does not warrant exercising discretion under §314(a).

Factor 1 weighs in favor of institution. Petitioners intend to seek a stay of the Texas Case pending the outcome of this IPR, along with other IPRs related to the litigation dispute. At the time of institution, it is highly unlikely that the Court will have conducted a *Markman* hearing, which is currently scheduled for 2/13/2026. Ex.1020, 4. The EDTX has routinely granted stays prior to claim construction, since cases have "not reached such an advanced stage that it would weigh against a stay." *Broadphone LLC v. Samsung Elecs. Co.*, No. 2:23- CV-00001-JRG-RSP, 2024 WL 3524022, at *2-3 (E.D. Tex. July 24, 2024).

While ***Factors 2 and 3*** are neutral or at most weigh slightly against institution, they deserve little weight given Petitioners' diligence in preparing and filing this Petition.

Factor 4 weighs strongly in favor of institution. Petitioners hereby stipulate that, if the PTAB institutes this proceeding, Petitioners will not pursue in Texas Case (1) the specific grounds asserted in this proceeding or any ground that was raised or could have been raised in an IPR proceeding against the Challenged Claims; or (2) combinations of the prior art asserted in this proceeding with any other type of prior art against the Challenged Claims.

Factor 5 is neutral or weighs at most only slightly against institution. While Petitioners and PO are the same parties in the Texas Case, institution and a public

trial record of the important invalidity grounds in the Petition will reduce issues for the public, including all parties besides Petitioners who currently are or may in the future be subject to litigation involving the ’455.

Factor 6 weighs strongly in favor of institution. The ’455 issued in 2021 and was not asserted prior to the Texas Case—PO has not developed settled expectations. *Berkshire Hathaway Energy Co. et al. v. MES, Inc.*, IPR2025-00274, Paper 23 at 3 (PTAB Jul. 2, 2025); *Intel Corp. v. Proxense LLC*, IPR2025-00327, Paper 12 at 2–3 (PTAB June 26, 2025). Further, the Petition is strong, presenting compelling unpatentability arguments overlooked during prosecution. *See* §§IX.B-E. Indeed, in prior ’533- and ’484-IPRs, the Board already rejected identical or substantially identical claims to the ’455 based on **Lisogurski**, **Tran**, and **Carlson** as applied herein. *See Posco Co., Ltd. v. Arcelormittal*, IPR2025-00370, Paper 10 at 3 (PTAB June 25, 2025) (The Board’s prior unpatentability decision on related patents “tips the balance against discretionary denial.”); *Tesla, Inc., v. Intellectual Ventures II LLC*, IPR2025-00217, Paper 9 at 2 (PTAB June 13, 2025).

Indeed, the Board is uniquely positioned to address the issue of collateral estoppel based on the ’533- and ’484-IPRs. *ParkerVision, Inc. v. Qualcomm Inc.*, 116 F.4th 1345, 1362 (Fed. Cir. 2024); *Samsung Elecs. Co., Ltd. v. Netlist, Inc.*, IPR2025-00002, Paper 17 at 17-24 (PTAB May 15, 2025); *see also* §IX.A.

Accordingly, the Board should not exercise its discretion to deny institution.

VII. LEVEL OF ORDINARY SKILL IN THE ART

As the Board concluded and PO did not dispute in the '533-/'484-IPRs, on or before the claimed priority date of 12/31/2012, a POSITA "would have [had] a good working knowledge of optical sensing techniques and their applications, and familiarity with optical design and signal processing techniques." '533-FWD, 8-9; *see also* '484-Inst., 7-8; '484-FWD, 11 n.7. A POSITA would have obtained such knowledge through "an undergraduate education in engineering (electrical, mechanical, biomedical, or optical) or a related field of study, along with relevant experience studying or developing physiological monitoring devices…in industry or academia." '533-FWD, 8-9; '484-Inst., 7-8; '484-FWD, 11 n.7. Anthony, ¶¶51-54.

VIII. CLAIM CONSTRUCTION

Claim terms subject to IPR are to be construed according to the *Phillips* standard applied in district court. §42.100(b). Only terms necessary to resolve the controversy must be construed. Because the prior art asserted herein discloses embodiments within the Claims' indisputable scope, the Board need not construe the

Claims' outer bounds.[3] Other than noted here, all claim terms should be construed according to their plain and ordinary meaning as they would have been understood by a POSITA. Anthony, ¶¶55-68.

In prior Board or district court proceedings involving patents related to the '455, certain terms identical to or substantially similar to language in the Claims were construed, as detailed below. Though Petitioners do not believe that those terms need to be construed here, the prior art discloses and renders obvious those terms, including under those prior constructions, as discussed in §§IX.B-E, *infra*. Anthony, ¶¶55-68.

A. "light source" limitations ([7], [14], [20])

In the '533-FWD, the Board construed "a light source comprising a plurality of semiconductor sources that are light emitting diodes…***configured to*** increase signal-to-noise ratio by…increasing a pulse rate of at least one of the plurality of semiconductor sources" to mean "a light source containing two or more light emitting diodes (semiconductor sources), wherein at least one of the light emitting

[3] In the Texas Case, Defendants identified certain limitations of the '455 as potentially indefinite. Ex.1023, 240-241. Regardless of the outer bounds of these limitations, the prior art discloses and renders obvious embodiments within the indisputable scope of these limitations. *See* §§IX.B-E. Anthony, ¶¶67-68.

diodes is ***capable of*** having its pulse rate increased to increase a signal-to-noise ratio." '533-FWD, 10-12; '533-Inst., 9-11. Anthony, ¶56.

B. "to detect an object" limitation ([19])

In the '484-FWD, the Board construed "to detect an object" as "to discover or notice the existence or presence of something," consistent with the plain and ordinary meaning of the term. '484-FWD, 8-10. Anthony, ¶57.

C. Additional Terms Discussed in '484/'533 IPRs and District Courts

In the '484-IPR, the petitioner proposed construing "optical light" and informed the Board of its proposed construction for "lens" in a parallel district court case, Omni did not propose constructions, and the Board did not construe them. '484-Pet., 20; '484-Inst., 9-10; '484-FWD, 7-8. In the '533-IPR, the petitioner proposed construing "plurality of lenses," and "pulse rate," which the Board declined to construe. '533-Pet., 19-20; '533-FWD, 9-10. The Board in '533- and '484-IPRs did not construe any other claim present in the '455. Anthony, ¶58-64.

Prior to the Board's '533-FWD, in two Eastern District of Texas cases involving related patents to the '455, including the '533, the district court determined that the term "lenses" should be given its "plain and ordinary meaning without the need for further construction." Ex.1018, 10-13 (construing "plurality of lenses" in claims 5 and 13 of the '533); Ex.1019, 12-15 (construing "lens" and "one or more lenses" in related patents). Anthony, ¶¶65-66.

Petitioners agree that these terms do not require further construction for purposes of this IPR.

IX. GROUNDS OF UNPATENTABILITY

As explained below, the Claims are unpatentable as obvious. This Petition is supported by the Declaration of Brian Anthony, which describes the prior art's scope and content at the time of the '455. Anthony, ¶¶69-74.

A. Collateral Estoppel Applies to Most of the Challenged Claims

The vast majority of the Challenged Claims were already found unpatentable in prior '533/'484-FWDs. '533-FWD; '484-FWD (FWD issued prior to appeal); '484-RFWD (FWD issued on remand).[4]

It thus is an efficient use of Board resources to address similar claims in the related '455, and collateral estoppel should apply to entire limitations [1.pre]-[1.l], [8.pre]-[8.l], [15.pre]-[15.l], and at least partially to [5], [7], [12], [14], [18] and [20].

First, these limitations are "identical" or substantially identical to limitations already found unpatentable by the Board in the prior '533 and/or '484-IPRs against

[4] *See also Apple Inc. v. Omni Medsci, Inc.*, IPR2020-00175, Paper 26 (June 14, 2021); *Omni MedSci, Inc. v. Apple Inc.*, No. 2021-2213, 2022 WL 2062167 (Fed. Cir. June 8, 2022).

PO. *See* ’533-FWD, 25-43; ’484-FWD, 12-55.[5] *Google LLC v. Hammond Dev. Int'l*, 54 F.4th 1377, 1381-82 (Fed. Cir. 2022); *Samsung Elecs. Co., Ltd. v. Netlist, Inc.*, IPR2025-00002, Paper 17 at 17-24 (PTAB May 15, 2025) (“Patent Owner is collaterally estopped” as to obviousness of all challenged claims, based on FWDs relying on the same ground to find “substantially similar” limitations in related patents obvious). To the extent there are any differences between the aforementioned ’455 limitations and prior limitations at issue in the ’484/’533-IPRs, they are immaterial and met for the same reasons. Anthony, ¶¶69-448.

Second, these limitations were “actually litigated” in the prior ’533 and ’484-IPRs. *Google*, 54 F.4th at 1381-82; ’533-FWD, 25-43; ’533-Pet, 21-63; ’533-POR, 13-32; ’484-FWD, 12-55; ’484-Pet, 21-66; ’484-POR, 14-42.

Third, the Board’s findings with respect to these limitations were “essential” to the Board’s FWDs, which were final judgments because they were affirmed by the Federal Circuit or not appealed. *United Therapeutics Corp. v. Liquidia Techs., Inc.*, 74 F.4th 1360, 1372 (Fed. Cir. 2023).

Fourth, PO here (Omni) was the same PO who defended against the prior

[5] To meet these identical/substantially identical limitations, the Board relied on the same embodiments of **Lisogurski** in the ’533-FWD and ’484-FWD, as does this Petition. *See* §§IX.B-E. Anthony, ¶¶10-11.

’533 and ’484-IPRs and thus had a full and fair opportunity to litigate the patentability of these limitations in the prior IPRs. *Google*, 54 F.4th at 1381-82.

PO is thus collaterally estopped from relitigating the unpatentability determinations of the aforementioned limitations in this IPR. To the extent PO is not collaterally estopped from relitigating the unpatentability of one or more of the aforementioned limitations in this IPR, the Board’s findings (as discussed below in §§IX.B-E) regarding the unpatentability of the immaterially different limitations in the ’484/’533 IPR(s) apply equally here. Anthony, ¶¶69-448.

B. Ground 1: Lisogurski in combination with knowledge of a POSITA (Claims 1, 8, 11)

1. Overview of Lisogurski

Lisogurski discloses a “physiological monitoring system [that] monitor[s] one or more physiological parameters...using one or more physiological sensors.” Lisogurski, 3:44-46, 4:3-5. Such sensors may include a pulse oximeter with a light sensor placed on a patient’s fingertip, toe, forehead, or earlobe. Lisogurski, 4:6-7. ’533-FWD, 12-13; ’484-FWD, 13. Anthony, ¶75.

Lisogurski Figure 1 is reproduced below:

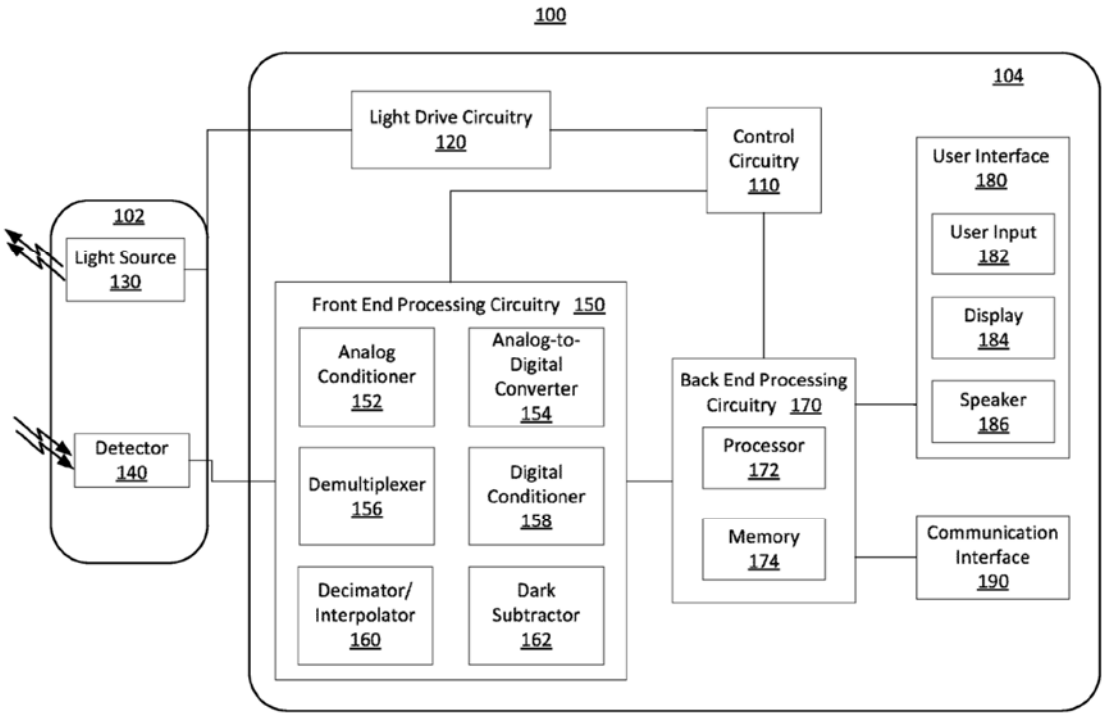

FIG. 1

Lisogurski Figure 1 is a "block diagram of an illustrative physiological monitoring system." Lisogurski, 2:11-13. The system includes sensor 102, including light source 130 and detector 140, and monitor 104 for "generating and processing physiological signals of a subject." Lisogurski, 10:44-49. Light source 130 emits one or more wavelengths of light, including red and IR light emitters (e.g., LEDs) emitting 600-700nm and 800-1000nm wavelength light, respectively. Lisogurski, 10:49-11:8. Spatially separated detectors 140 detect light intensity, converts them to an electrical signal, and sends the detection signal to monitor 104, where it is processed to determine physiological parameters. Lisogurski, 11:9-23, 17:40-45. '533-FWD, 15-16; '484-FWD, 15-16. Anthony, ¶¶76-77.

Monitor 104 includes user interface 180, communication interface 190, and control circuitry 110 for controlling light drive circuitry 120, front end processing circuitry 150, and back end processing circuitry 170. Lisogurski, 11:28-36. Light drive circuitry 120 generates a light drive signal for turning on/off and controlling the intensity of light source 130. Lisogurski, 11:38-54. Front end processing circuitry 150 "receive[s] a detection signal from detector 140 and provide[s] one or more processed signals to back end processing circuitry 170," and "synchronize[s] the operation of an analog-to-digital converter and a demultiplexer with the light drive signal based on the timing control signals." Lisogurski, 11:40-46, 12:42-48. '533-FWD, 16; '484-FWD, 16. Anthony, ¶¶78-80.

Backend processing circuitry 170 includes processor 172 and memory 174, and "receive[s] and process[es] physiological signals received from front end processing circuitry 150" to "determine one or more physiological parameters." Lisogurski, 14:56-64. Backend processing circuitry 170 is "communicatively coupled [to] use[r] interface 180 and communication interface 190." Lisogurski, 15:16-18. User interface 180 includes "user input 182, display 184, and speaker 186," and may include "a keyboard, a mouse, a touch screen, buttons, switches, [and] a microphone." Lisogurski, 15:19-22. Communication interface 190 allows "monitor 104 to exchange information with external devices," and includes

transmitters and receivers to allow wireless communications. Lisogurski, 15:43-57. **Lisogurski** discloses, while "the components of physiological monitoring system 100...are shown and described as separate components....the functionality of some of the components may be combined in a single component," and "the functionality of some of the components...may be divided over multiple components." Lisogurski, 15:66-16:12. '533-FWD, 15, 17; '484-FWD, 15-17. Anthony, ¶¶81-84.

Lisogurski Figure 3 is "a perspective view of an embodiment of a physiological monitoring system," including sensor 312, monitor 314, and multi-parameter physiological monitor ("MPPM") 326. Lisogurski, 2:23-25, 17:35-36, 18:44-45. Anthony, ¶85.

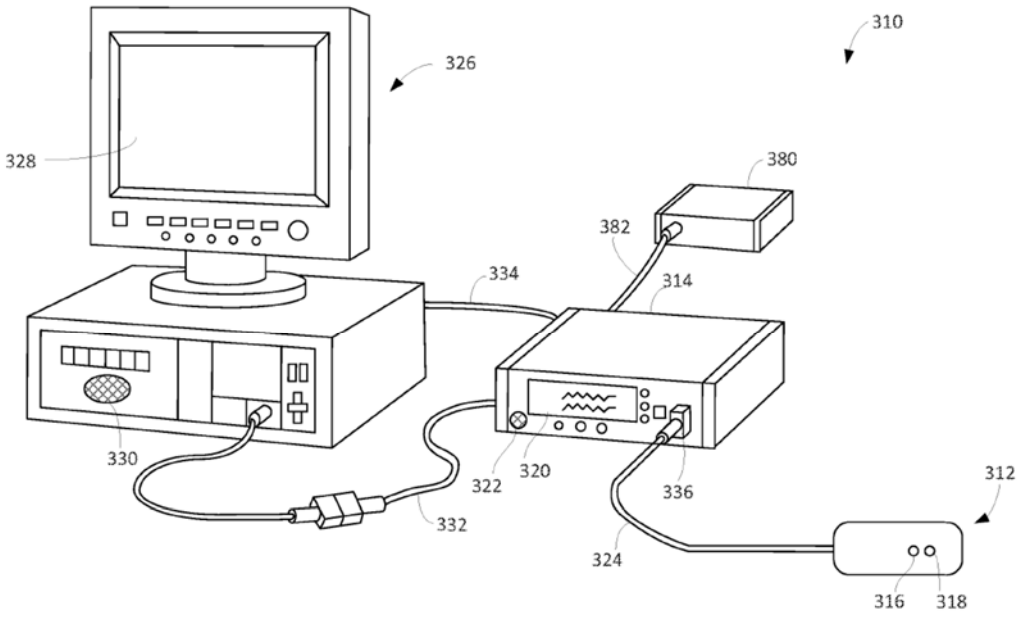

FIG. 3

Figure 3's system may include one or more components of Figure 1's system,

specifically monitor 314 may be implemented as monitor 104.[6] Lisogurski, 17:30-35, 18:13-14. Sensor 312 and monitor 314 include similar configurations as sensor 102 and monitor 104, respectively. *See* Lisogurski, 17:37-62, 18:3-10, 19:25-27. '533-FWD, 13-15; '484-FWD, 13-15. Anthony, ¶87.

Monitor 314 "may communicate wirelessly" with MPPM 326. Lisogurski, 18:58-65. MPPM 326 "calculate[s] physiological parameters and...provide a display 328 for information from monitor 314," and is "coupled to a network to enable the sharing of information with servers or other workstations." Lisogurski, 18:49-52, 18:62-65. The remote network servers "determine physiological parameters," and display the parameters on a remote display, display 320 of monitor 314, or display 328 of MPPM 326. Lisogurski, 20:53-58. '533-FWD, 13-15; '484-FWD, 13-15. Anthony, ¶88.

Lisogurski discloses various methods for improving signal-to-noise ratio including: modulating the light drive signal with a "period the same as or closely related to the period of [a] cardiac cycle," using a dark subtraction process to remove

[6] A POSITA would have understood that Figure 3 is an exemplary application of the embodiment shown in Figure 1, and that the disclosures in Figure 3 apply to the corresponding components or features in Figure 1. Anthony, ¶¶86-87.

noise from the ambient light, and varying light drive signal including drive current or light brightness, duty cycle, firing rate, and other suitable parameters. Lisogurski, 6:7-19, 9:46-60, 13:60-14:10, 16:33-54, 25:49-55. '533-FWD, 17; '484-FWD, 17-20. Anthony, ¶89.

2. Motivation to Modify Lisogurski

As the Board found in the prior '533-IPR, a POSITA would have been motivated to modify **Lisogurski's** physiological monitoring system 100 to "relocat[e] **control circuitry 110**, **light drive circuitry 120**, and **front end processing circuitry 150** of monitor 104 to sensor 102." '533-FWD, 22-25 (including annotated Fig. 1 below); *see also* '484-FWD, 24-25 (discussing incorporating front end processing circuitry into sensor).

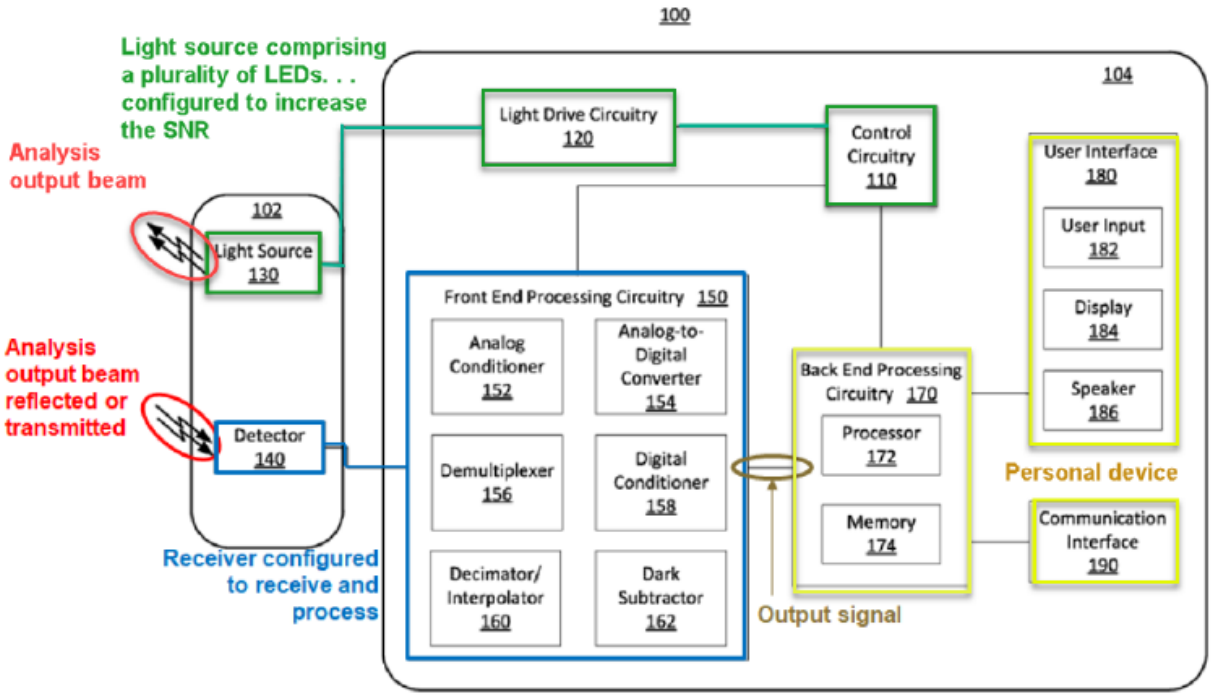

FIG. 1

As the Board found, "Lisogurski expressly suggests the modification by teaching embodiments in which 'the functionality of some of the components may be combined in a single component' and embodiments in which 'the functionality of some of the components of monitor 104…may be divided over multiple components.'" '533-FWD, 23 (quoting Lisogurski, 16:2-4, 16:7-9); *see also* '484-FWD, 24-25. As to the **control circuitry 110** and **light drive circuitry 120**, because they work together to output the electric current applied to the light source, a POSITA would have understood or at least found it obvious to include the circuitry in the same device as the **light source**. *See* '533-FWD, 23 (citing '533-Pet., 32-34). As to the **front end processing circuitry 150**, because it performs analog-to-digital

conversion and other initial processing of the signal, the Board also agreed that a POSITA would have understood or at least found it obvious to include it in the sensor where the signal is captured. *See* '533-FWD, 23-24 (citing '533-Pet., 47-48). Indeed, it was common for **light sources** to include **light drive circuitry and control circuitry**, and for a sensor to include a **front end processing circuitry**. *E.g.*, Exs.1036, 11:7-33 (signal processing circuitry integrated onto the same semiconductor chip as photodiode structure); 1034, 2:66-4:20, FIGS. 7-9 (photodetector with signal processing capability); 1035, 3:37-52, FIG. 2 (processing circuitry included into integrated smart sensor); 1031, 14:12-26, FIG. 18 (light driver circuit in probe); 1033, [0052], FIG. 4 (showing front end analog signal conditioning circuitry 330 in sensor 300); Anthony, ¶¶105-106. "[N]umerous industry trends motivate the modification," which "include improving the capabilities of wearable sensors for use in sports and personal fitness applications and wireless connecting wearable sensors to networks to remotely monitor patient health." '533-FWD, 23. Anthony, ¶¶90-107.

3. Claim Limitations

a. [1.pre] "A system for measuring one or more physiological parameters and for use with a smart phone or tablet, the system comprising:"[7]

Lisogurski's "optical physiological monitoring system" meets [1.pre]. To meet the **same limitation**, the Board relied on **Lisogurski's** "optical physiological monitoring system" (including sensor 102/312 and monitor 104/314) that "may be used to determine physiological parameters…." '484-FWD, 23, 26-27 (citing '484-Pet., 27-28 (citing Lisogurski, 1:10-25, 3:43-46, 3:61-4:5, 4:22-25, 15:30-35)); '533-FWD, 25; *see also* Lisogurski, 17:55-59. Anthony, ¶¶109-114.

The Board also separately found that **Lisogurski** meets "a smart phone or tablet" being part of its system. In doing so, the Board relied on **Lisogurski's** monitor 104/314 within the monitoring system—"a portable, battery powered system that includes a touchscreen," "back-end processing that receives signals from

[7] **Green** emphasis indicates '455 claim limitations identical to those addressed in the '533 and '484-IPRs, **black** emphasis indicates '455 claim limitations that differ from, but are substantially identical to, those addressed in the '533 and '484-IPRs, **blue** emphasis indicates limitations similar to the earlier-discussed '455 claim limitations, **all other** emphases show new limitations in the '455 not addressed in the '533 and '484-IPRs.

the front end and can be configured for wireless communications, and includes a microprocessor, and an interface with a display, speaker, and microphone." '484-FWD, 25-27 (citing '484-Pet., 40-42 (citing Lisogurski, 1:16-18, 14:56-66, 15:19-23, 15:43-57, 18:49-66, 20:55-60, Fig. 1)); '533-FWD, 39-42 (finding **Lisogurski** meets a similar "personal device" limitation). Anthony, ¶¶109-114.

Consistent with the Board's finding, a POSITA would have understood (or at least found it obvious) that a portable, battery-powered device with a touchscreen that is capable of wireless communication would include a smart phone or tablet, and that **Lisogurski's** "physiological monitoring system" would be used with the common and easily accessible smart phone or tablet. '484-FWD, 23, 25-27. Anthony, ¶¶109-114.

b. [1.a] "a wearable device adapted to be placed on teeth, a wrist, or an ear of a user, and"

Lisogurski's sensor meets [1.a]. To meet "**a wearable device adapted to be placed on a wrist or an ear of a user**" ('484 claim 1), the Board relied on **Lisogurski's** disclosure that its sensor (e.g., sensor 102/312) may be worn on various parts of a person's body, including "the wrist to monitor radial artery pulsatile flow" and "around or in front of the ear." '484-FWD, 23, 26-27 (citing '484-Pet., 27-28 (citing Lisogurski, 4:6-20)); *see also* Lisogurski, 10:44-46, 17:30-36. Anthony, ¶¶115-118.

c. [1.b] "including a light source comprising a driver and a plurality of semiconductor sources, the plurality of semiconductor sources configured to generate an output optical light having a plurality of optical wavelengths"

Lisogurski's sensor with light source meets [1.b].[8] To meet "**a light source** comprising **a plurality of semiconductor sources** that are light emitting diodes, the light emitting diodes **configured to generate an output optical** beam with one or more **optical wavelengths**" ('533 claims 5/13), the Board relied on **Lisogurski's** "[s]ensor 102/312" "contain[ing] multiple LEDs that emit and direct light toward a subject's tissue, including an LED that emits red light, and an LED that emits infrared light having a wavelength between 800 and 1000 nm." '533-FWD, 25-26

[8] Regardless of the outer bounds of the term "the plurality of semiconductor sources configured to generate an output optical light having a plurality of optical wavelengths," the term's scope must at least include **Lisogurski**'s disclosures as **Lisogurski** discloses (1) two light emitting diodes that ***each*** generate an output beam of light having one or more wavelengths, and (2) its light source 130, collectively comprising LEDs, can "emit photonic signals having one or more wavelengths of light tissue." '533-FWD, 25-26; Lisogurski, 10:48-52, 10:56-63; Ex.1030, 9:57-62; Ex.1077, [0089]; Ex.1059, 2:20-29; Ex.1060, 3:26-63; Ex.1061, 8:63-9:12. Anthony, ¶¶126-129.

(citing '533-Pet., 29-30 (citing Lisogurski, 4:42-45, 7:38-8:3, 10:48-52, 10:56-64, 17:37-45, 19:25-31, FIGS. 1 (130), 3 (316))); *see also* Lisogurski, 10:52-56; '484-FWD, 23, 26-27. It was well-known in the art that LEDs are semiconductors. *E.g.*, Ex.1039, 2:6-9 ("The LED is a semiconductor diode that emits incoherent narrow-spectrum light…."). Anthony, ¶¶119-123.

Regarding "a light source comprising a **driver**," **Lisogurski** further teaches "light drive circuitry 120," which a POSITA would have understood (or at least found obvious) to be within light source 130 because, as the Board agreed, light drive circuitry 120 and light source 130 operate together to output the electric current applied to the light source. §IX.B.2. Light drive circuitry 120 turns on/off the "light source 130" by generating "light drive signal[s]." Lisogurski, 10:42-46, 11:28-31, 11:38-41; *see also* Lisogurski, 11:50-60. Anthony, ¶¶124-125.

d. [1.c] "the wearable device comprising one or more lenses configured to receive at least a portion of the output optical light and to deliver a lens output light to tissue;"

Lisogurski's sensor discloses and renders obvious [1.c]. **Lisogurski's** "sensor 102" includes "LEDs" (Lisogurski, 10:48-56) and, to meet "**the wearable** measurement **device comprising** a plurality of **lenses configured to receive a portion of the output optical** beam **and to deliver** an analysis output beam to a sample" ('533 claims 5/13), the Board found that (1) a POSITA "would have known

that LEDs are often covered by lensing encapsulants and would have selected such LEDs for [Lisogurski's] wireless sensor 102/312 in order to 'direct more of the light produced by the LED outward toward the tissue,' thereby improving the efficiency of wireless, battery-powered, sensor 102/312," and (2) knowing that "a lens is a 'basic building block' of an optical sensor" that a POSITA would have included lenses in **Lisogurski's** wireless sensor 102/312. '533-FWD, 35-36 (citing '533-Pet., 39-41 (citing Lisogurski, 7:38-8:3, 10:53-56, 19:25-31; Ex.1037, 97-98, 191-99, 266-67; Ex.1038, 765)); *see also* '484-FWD, 23, 26-27 (finding **Lisogurski** meets substantially identical limitation). Anthony, ¶¶130-137.

e. [1.d] "the wearable device further comprising a detection system configured to receive at least a portion of the lens output light reflected from the tissue and to generate an output signal having a signal-to-noise ratio,"

Lisogurski's detector and front end processing circuitry meets [1.d]. To meet the **same limitation**, the Board relied on the modified embodiment of **Lisogurski** (§IX.B.2), specifically the "detection system in the form of a sensor with one or more detectors connected to front-end processing circuitry that may receive a detection signal, i.e., light that is reflected by or has traveled through the subject's tissue, from detector 140, and provides processed signals, i.e., electrical signals based on the intensity of the reflected light, to back-end circuitry 170." '484-FWD, 23-24, 26-27 (citing '484-Pet., 33-34 (citing Lisogurski, 11:9-10, 11:14-17;

11:20-27, 12:42-45, 17:40-42, FIGS. 1 (102), (140), 3 (312), (318))); *see also* ’533-FWD, 37-39. The Board further noted that “the processed signals originate from detection signals that have a signal-to-noise ratio.” ’484-FWD, 23-24, 26-27 (citing ’484-Pet., 33-34 (citing Lisogurski, 9:46-52, 11:20-27, 14:49-50)); *see also* ’533-FWD, 37-39; Lisogurski, 11:41-46. Anthony, ¶¶138-144.

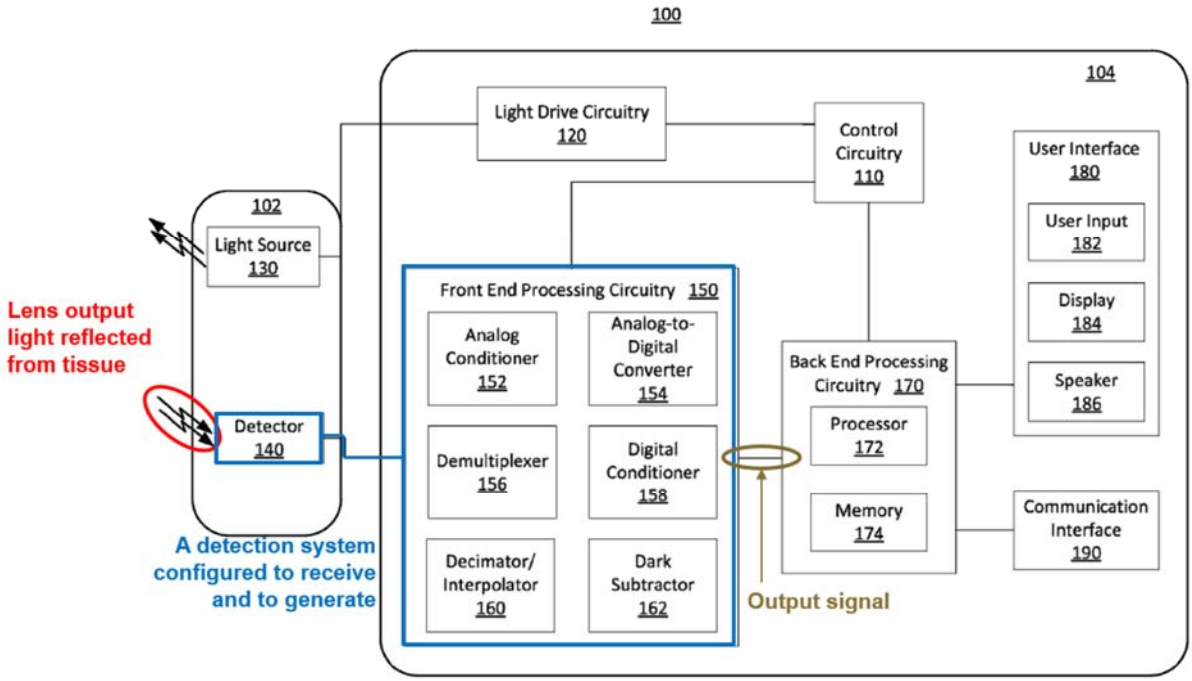

FIG. 1

f. [1.e] "wherein the detection system is configured to be synchronized to the light source;"

Lisogurski's front end processing circuitry meets [1.e].[9] To meet the **same limitation**, the Board relied on the modified embodiment of **Lisogurski** (§IX.B.2), specifically that front end processing circuitry 150 as within the detector "operat[es] synchronously with light drive circuitry 120, e.g., by synchronizing the sampling rate of an analog to digital converter to a modulated LED firing rate to provide, e.g., one or more samples to be averaged per period." '484-FWD, 24-27 (citing '484-Pet., 34-35 (citing Lisogurski, 2:1-2, 11:41-46, 27:44-52, 33:47-49, 35:17-23, 35:25-31)); *see also* '533-FWD, 37-39; Lisogurski, 6:16-19, 11:50-54, 16:48-54, 16:67-17:2, FIG. 1. Anthony, ¶¶145-150.

g. [1.f] "wherein the detection system comprises a plurality of detectors that are spatially separated from each other, and wherein at least one analog to

[9] Regardless of the outer bounds of [1.e], its scope must at least include **Lisogurski's** disclosures as they correspond to the '455's embodiments covered by the limitation. '455, 44:62-67. Anthony, ¶¶151-154.

digital converter is coupled to at least one of the spatially separated detectors;"

Lisogurski's detector meets [1.f].[10] To meet "**wherein the detection system comprises a plurality of** spatially separated detectors**, and wherein at least one analog to digital converter is coupled to at least one of the spatially separated detectors**" ('484, claim 1), the Board relied on **Lisogurski's** disclosure of "[o]ne or more detector 318…for detecting the light that is reflected by…the subject's tissue" and that the sensor "may include multiple…detectors, which may be spaced apart." *See* '484-FWD, 25-27 (citing '484-Pet., 38-40 (citing Lisogurski, 11:9-10, 17:40-45, Figs. 1 (140), 3 (318)). The Board further relied on **Lisogurski's** disclosure that the electrical signals generated by the detectors are received by the front-end processing circuitry—including an analog-to-digital converter—and are passed between the components of the circuitry. *See* '484-FWD, 25-27 (citing '484-Pet., 38-40 (citing Lisogurski, 13:6-60, Figs. 1 (140), 3 (318)). Anthony, ¶¶155-158.

[10] Regardless of the outer bounds of the terms "a plurality of detectors that are spatially separated from each other," and "spatially separated detectors," their scope must at least include **Lisogurski's** disclosures as they correspond to the '455's embodiments covered by the limitations. '455, 28:16-53, Fig. 18B. Anthony, ¶¶159-161.

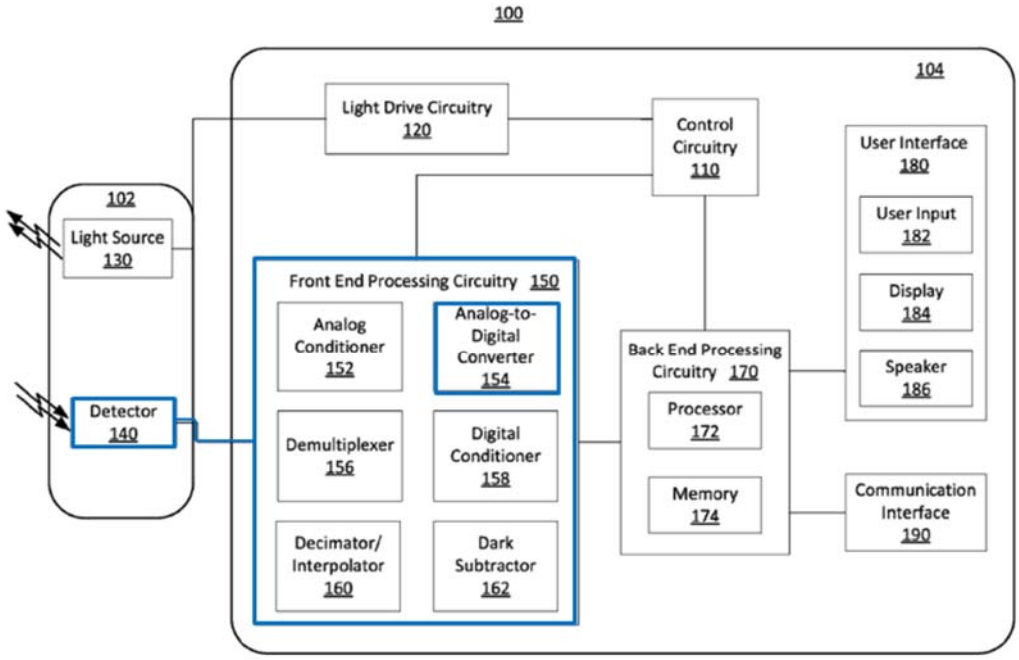

FIG. 1

h. [1.g] "the smart phone or tablet comprising a wireless receiver, a wireless transmitter, a display, a speaker, a voice input module, a microprocessor and a touch screen, the smart phone or tablet configured to receive and process at least a portion of the output signal, wherein the smart phone or tablet is configured to store and display the processed output signal, and wherein at least a portion of the processed output signal is configured to be transmitted over a wireless transmission link;"

Lisogurski's monitor meets [1.g]. To meet "**the smart phone or tablet comprising a wireless receiver, a wireless transmitter, a display, a speaker, a voice input module,** one or more buttons or knobs**, a microprocessor and a touch screen, the smart phone or tablet configured to receive and process at least a portion of the output signal, wherein the smart phone or tablet is configured to**

store and display the processed output signal, and wherein at least a portion of the processed output signal is configured to be transmitted over a wireless transmission link" (’484 claim 1), the Board relied on **Lisogurski’s** "sensor[] designed to be used with a monitor that may be a portable, battery powered system that includes a touchscreen and has back-end processing that receives signals from the front end and includes a microprocessor and an interface with a display, speaker, and microphone" and that "the back-end processing…can be configured for wireless communication." ’484-FWD, 25-27 (citing ’484-Pet., 40-42 (citing Lisogurski, 1:16-18, 14:56-66, 15:19-27, 15:43-57, 18:49-66, 20:55-60, FIG. 1)); ’533-FWD, 39-42; *see also* Lisogurski, 14:67-15:16, 15:30-42, 18:3-5, FIG. 3. As the Board agreed, a POSITA would have found it obvious that **Lisogurski’s** monitor 104, which is "portable," "battery powered" and has a "user interface" with "a touch screen," would include a smart phone or tablet. ’484-FWD, 25-27. Anthony, ¶¶162-169.

To show that **Lisogurski’s** monitor 104 as modified (§IX.B.2) comprises a "**wireless receiver, a wireless transmitter, a display, a speaker,** a microphone**,** one or more buttons or knobs, **a microprocessor and a touch screen**" (’533 claims 5/13), the Board relied on **Lisogurski’s** monitor 104 including "communication interface 190" (including "one or more receivers" and

"transmitters" "configured to allow…wireless communication"), user interface 180 (including "display 184," "speaker 186," and user input 182 further including "microphone," and "touch screen"), and "back-end processing circuitry 170" (including "microprocessor 172"). '533-FWD, 40, 42-43 (citing '533-Pet., 50-51); '484-FWD, '484-FWD, 25-27 (citing '484-Pet. 40-42); Lisogurski, 14:60-15:16, 15:19-23, 15:30-35, 15:43-57, 18:11-15, 18:49-65, 26:55-60, 27:31-36, Fig. 1. Anthony, ¶¶162-169.

Regarding "**receive and process at least a portion of the output signal, wherein the** personal device **is configured to store and display the processed output signal, and wherein at least a portion of the processed output signal is configured to be transmitted over a wireless transmission link**" ('533 claims 5/13), the Board also relied on **Lisogurski**'s disclosure that "processor 172 in back end processing circuitry 170" of monitor 104 "'receive[s] and process[es] physiological signals [i.e., the output signal] received from front end processing circuitry 150' and 'determine[s] one or more physiological parameters based on the received physiological signals.'" '533-FWD, 41 (citing '533-Pet., 50-53); *see also* '484-FWD, 25-27; Lisogurski, 14:56-64, FIG. 1. As the Board further explained, "[m]onitor 104/314 displays the processed output signal (i.e., a determined physiological parameter) because it includes display 184/320, which can 'display,

for example, an estimate of a subject's blood oxygen saturation generated by monitor 104.'" '533-FWD, 41 (citing '533-Pet., 50-53); *see also* '484-FWD, 25-27 (citing '484-Pet, 40-42); Lisogurski, 15:30-35, FIGS. 1, 3. Furthermore, the Board explained that "[m]onitor 104/314 stores the processed output signal because it includes memory 174, which can store "historical information [measured in] previous cardiac cycles." '533-FWD, 41 (citing '533-Pet., 50-53); Lisogurski, 14:56-15:16, 27:31-36, 11:28-32, FIG. 1. Anthony, ¶¶162-169.

As the Board further found, "monitor 104/314 transmits the processed output signal over a wireless link because communications interface 190 can use a wireless communications protocol to transmit the signal to MPPM 326 for display on remote display 328," such as "WiFi, IR, WiMax, BLUETOOTH, UWB or other standards." '533-FWD, 41-42 (citing '533-Pet., 50-53); Lisogurski, 15:30-57, 18:3-6, 18:11-15, 18:49-65, 26:55-60, FIGS. 1, 3. Anthony, ¶¶162-169.

i. [1.h] "wherein the output signal is indicative of one or more of the physiological parameters;"

Lisogurski's data (i.e., an output signal, transmitted to a server, monitor, or remote device) meets [1.h]. To meet the **same limitation**, the Board relied on **Lisogurski's** disclosure "that data, i.e., an output signal transmitted to a server, monitor, or remote device may be stored or published, [and] that MPPM 326, is configured to calculate physiological parameters" based on the transmitted data such

that the transmitted data is indicative of physiological parameter(s). '484-FWD, 26-27 (citing '484-Pet., 44 (citing Lisogurski, 18:49-53, 19:1-19, 20:8-13, 20:53-55, 26:55-60)); *see also* Lisogurski, 3:66-4:5 (measuring "various blood flow characteristics including, but not limited to, the oxygen saturation of hemoglobin in arterial blood…" and "a patient's pulse rate and blood pressure."), 4:6-62, 12:9-16, 14:60-64, 17:59-67. Anthony, ¶¶170-174.

j. [1.i] "the wearable device configured to increase the signal-to-noise ratio by increasing light intensity of at least one of the semiconductor sources from an initial light intensity;"

Lisogurski's sensor meets [1.i].[11] To meet "**the wearable device configured to increase the signal-to-noise ratio by increasing light intensity of at least one of** the plurality of **semiconductor sources from an initial light intensity**" ('484,

[11] Regardless of the outer bounds of [1.i], the term's scope must at least include **Lisogurski**'s disclosures because **Lisogurski** discloses both (1) from an initial light intensity, "increas[ing] the brightness of the light sources ***in response*** to the noise to improve the signal-to-noise ratio," and (2) preemptively "increas[ing] brightness ***throughout the cardiac cycle*** [to] differentiate between…points of interest related to physiological parameters and those related to noise or motion." Lisogurski, 9:46-60. Anthony, ¶¶181-182.

claim 1), the Board relied on **Lisogurski's** disclosures "that by increasing light intensity the system may increase the brightness of light sources in response to noise to improve signal to noise ratio," where "brightness (light intensity) [is] a parameter of the light drive signal, i.e., the signal that drives the LED" generated by light drive circuitry within sensor 102/312 as modified (§ IX.B.2). '484-FWD, 27 (citing '484-Pet., 45-48 (citing Lisogurski, 1:19-21, 1:44-46, 1:67-2:3, 5:55-6:6, 9:46-60, 10:48-49, 11:38-41, 11:50-54, 14:49-55, 25:49-55, 31:11-24, 31:39-55, 35:5-9, 37:6-22)); 533 FWD, 26. Anthony, ¶¶175-180.

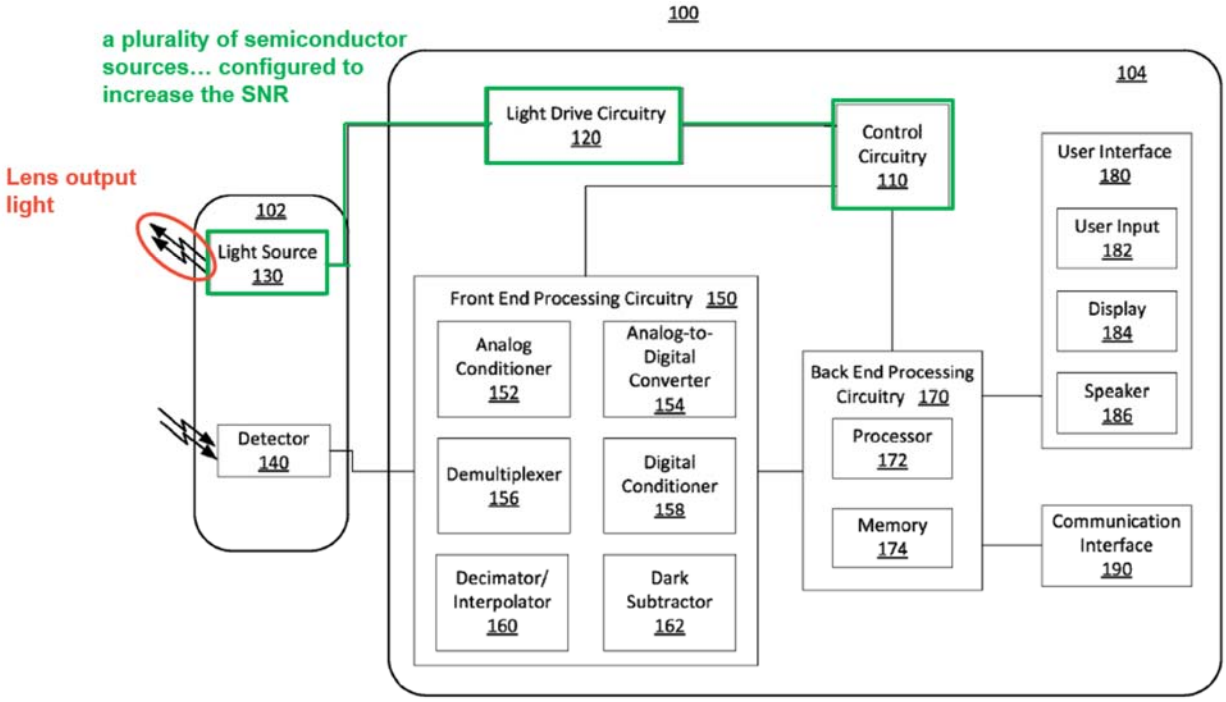

FIG. 1

k. [1.j] "the detection system further configured to: generate a first signal responsive to light received while the semiconductor sources are off,"

Lisogurski's front end processing circuitry meets [1.j]. To meet "**the detection system further configured to: generate a first signal responsive to light received while the** light emitting diodes **are off**" ('484, claim 1), the Board relied on **Lisogurski's** disclosure of "front end processing us[ing] the current measured when the LEDs are off to generate a dark signal representative of ambient light." '484-FWD, 43-44 (citing '484-Pet. 54-55 (citing Lisogurski, 6:7-19, 11:14-16, 12:59-13:6, 13:35-41, 13:60-14:10, 16:33-54, FIGS. 2A-2B)). As discussed above in [1.b], LEDs are semiconductor diodes. Anthony, ¶¶183-186.

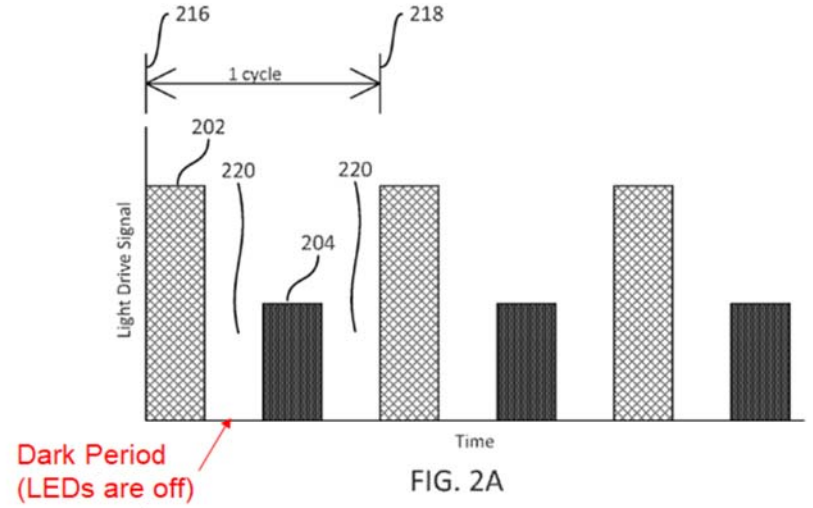

FIG. 2A

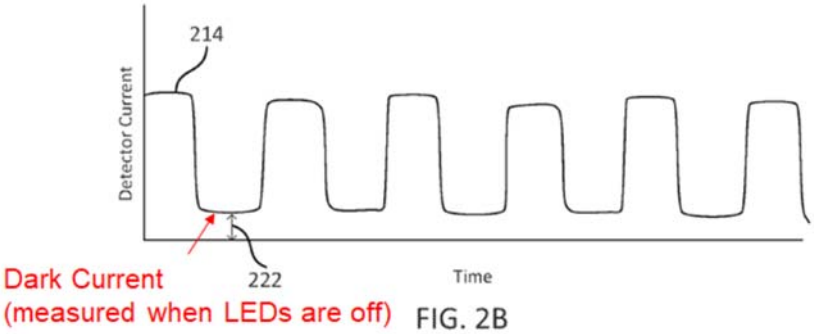

FIG. 2B

l. [1.k] "generate a second signal responsive to light received while at least one of the semiconductor sources is on; and"

Lisogurski's front end processing circuitry meets [1.k]. To meet "**generate a second signal responsive to light received while at least one of the** light emitting diodes **is on**" ('484, claim 1), the Board relied on **Lisogurski's** disclosure of a "front end processing circuitry measuring the signal when at least one LED is on to capture a portion of the optical beam, e.g., a red signal and an IR signal, reflected from the tissue." '484-FWD, 43-44 (citing '484-Pet., 55-56 (citing Lisogurski, 6:12-19, 11:12-20, 12:52-13:6, 13:35-41, 13:67-14:2, 16:52-53, 17:8-10, 17:40-42,

FIGS. 2A-2B)). Anthony, ¶¶187-190.

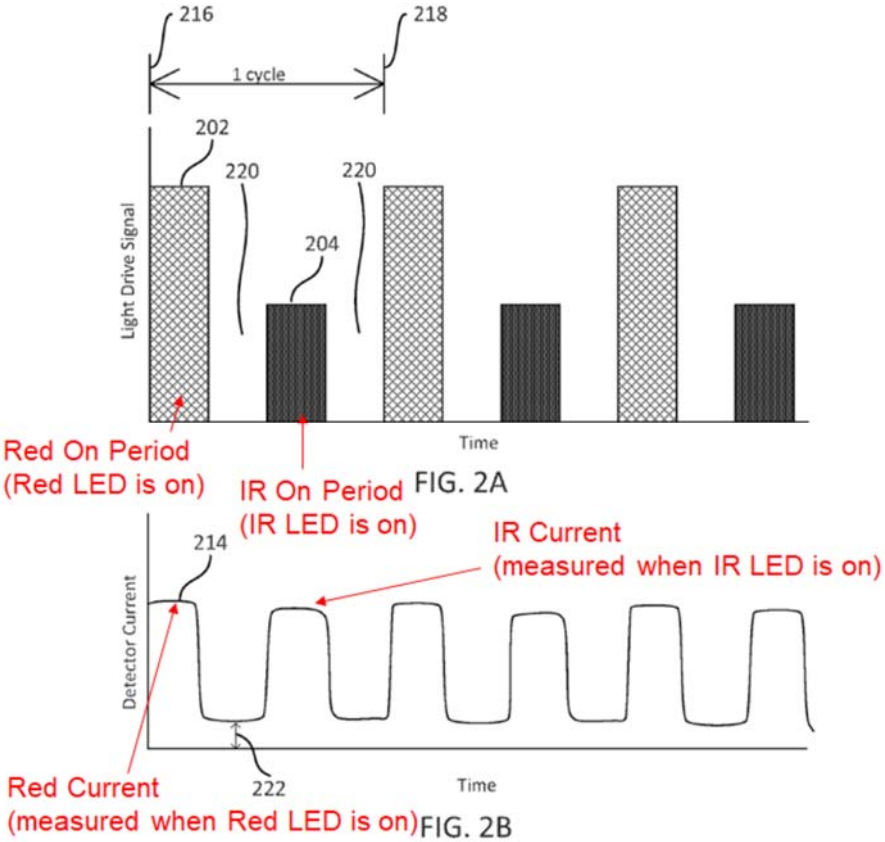

m. [1.l] "increase the signal-to-noise ratio by comparing the first signal and the second signal; and"

Lisogurski's front end processing circuitry meets [1.l].[12] To meet the **same**

[12] Regardless of the outer bounds of [1.l], its scope must at least include **Lisogurski**'s disclosures as they correspond to the '455's embodiments covered by the limitation. '455, 59:4-25. Anthony, ¶¶194-196.

limitation,[13] the Board relied on **Lisogurski's** disclosure of a "dark subtraction" technique that "subtracts the dark signal from the red and IR signals to generate adjusted red and IR signals with noise removed, thereby improving signal-to-noise ratio." '484-FWD, 44 (citing '484-Pet., 54, 57 (citing Lisogurski, 6:7-19, 13:60-14:10, 14:46-55, 16:33-54)). Anthony, ¶¶191-193.

n. [1.m] "wherein the plurality of optical wavelengths comprises three optical wavelengths for measuring at least a portion of the one or more of the physiological parameters, wherein the optical wavelengths comprise near infrared or visible wavelengths."

The majority of [1.m] is met by **Lisogurski** for the reasons set forth above. *See* §§IX.B.3.c.[1.b] ("**plurality of optical wavelengths**"); IX.B.3.a.[1.pre] & IX.B.3.i.[1.h] ("**measuring at least a portion of the one or more of the physiological parameters**"). Anthony, ¶¶197-198.

Lisogurski also teaches "**the plurality of optical wavelengths comprises**

[13] In the '484-IPR, the Board and Petition stated that the corresponding '484 limitation recited "increase the signal-to-noise ratio by ***differencing*** the first and second signals." '484-FWD, 43; '484-Pet., 57. However, the '484 limitation at issue actually recites "increase the signal-to-noise ratio by ***comparing*** the first signal and the second signal," as recited in [1.l] of '455. *See* '484-FWD, 6 ('484 limitation 1(o)). Regardless, this difference is immaterial. Anthony, ¶193.

three optical wavelengths." **Lisogurski's** light source 130/316 "emit[s] photonic signals having one or more wavelengths of light" and "include[s] any number of light sources with any suitable characteristics." Lisogurski, 10:48-60, 10:65-11:6, 17:17-39. A POSITA would have understood (or at least found obvious) that using multiple wavelengths would result in more accurate and reliable physiological parameter measurements, and that **Lisogurski's** system would use multiple, e.g., three or more, optical wavelengths for a more accurate measurement. Lisogurski, 10:65-11:6; Anthony, ¶199. For example, **Lisogurski** discloses the benefit of using multiple wavelengths of light as, for example, high blood oxygen saturation blood is more sensitive to IR light while low blood oxygen saturation blood may be more sensitive to red light. Lisogurski, 24:58-25:5; *see also* LeBoeuf, [0153] (describing how "violet and UV light," due to their shallow penetration, are better suited for capturing "motion-related" physiological data, while "[g]reen, red, and IR wavelengths" penetrate deeper to "provide information on the blood vessels and blood analyte levels," and "blue wavelengths … [are] particularly useful for gauging changes in [blood vessel] size"). And, using multiple light sources, including three or more LEDs, for more accurate and reliable measurements was well-known in the art because "when only two wavelengths are used but there are more than two significant absorbers in the patient's tissue, the system may be underdetermined."

Ex.1033, [0035], [0033]-[0037]. Anthony, ¶¶199-203.

Lisogurski discloses using **at least red light of 600-700nm and IR light of 800-1000nm**. Lisogurski, 10:56-58. It was well-known in the art that red light is a visible light and that IR light with 800-1000nm of wavelength falls within the near-infrared region. *E.g.*, Exs.1046, 1:54-61; 1047, claim 1. A POSITA would thus have understood that **Lisogurski** discloses the optical wavelength comprising near infrared and visible wavelengths. Anthony, ¶204.

o. [8.pre]-[8.l][14]

Limitations [8.pre]-[8.l] are met for the same reasons discussed in corresponding limitations of claim 1, as shown in the table below. Anthony, ¶¶205-247.

[8.pre]	[1.pre] (*see* §IX.B.3.a)
[8.a]	identical to [1.a], except for removal of "teeth" (*see* §IX.B.3.b)
[8.b]	identical to [1.b], except for adding "light emitting diodes," which are taught by **Lisogurski** as discussed (*see* §IX.B.3.c)
[8.c]-[8.f]	[1.c]-[1.f] (*see* §§IX.B.3.d-g)

[14] Regardless of the outer bounds of the terms that have been identified as potentially indefinite in the Texas Case and recited in these limitations, their scope must at least include **Lisogurski's** disclosures, for the reasons discussed in §§IX.B.3.c.[1.b], IX.B.3.f-g.[1.e]-[1.f], and IX.B.3.m.[1.l]. Anthony, ¶¶205-247.

[8.g]	identical to [1.g] except for replacing "voice input module" with "microphone," which is disclosed by **Lisogurski** as discussed (*see* §IX.B.3.h)
[8.h]	[1.h] (*see* §IX.B.3.i)
[8.i]	identical to [1.i] except for adding "the plurality of" semiconductor sources (*see* §IX.B.3.j)
[8.j]-[8.k]	identical to [1.j]-[1.k] except for replacing "semiconductor sources" with "light emitting diodes," which is disclosed by **Lisogurski** as discussed (*see* §IX.B.3.k-l)
[8.l]	[1.l] (*see* §IX.B.3.m)

p. [8.m] "wherein the plurality of semiconductor sources comprises six light emitting diodes."

The majority of [8.m] is met by **Lisogurski** for the same reasons set forth above. *See* §§IX.B.3.c.[1.b] ("**a plurality of semiconductor sources**"), IX.B.3.o.[8.b] ("**a plurality of semiconductor sources that are light emitting diodes**"). Anthony, ¶¶248-249.

As to "**six light emitting diodes**," it merely specifies the number of LEDs and should not be afforded patentable weight. *See In re Applied Materials, Inc.*, 692 F.3d 1289, 1297 (Fed. Cir. 2012) (affirming obviousness because prior art disclosed values within claimed range, and there was no evidence "that the claimed range [was] 'critical'" or "'achieves unexpected results'"). Regardless, **Lisogurski** further

teaches light source 130 with "any number of" "LEDs" as light sources. Lisogurski, 10:52-60, 10:65-11:6, 17:37-39, 17:43-45, 19:22-31, 27:36-43. It was well-known in the art that additional lights result in increased measurement accuracy, and a POSITA would thus have understood (or at least found it obvious) that **Lisogurski's** system comprises multiple number of (e.g., six or more) LEDs for the same reasons discussed in [1.m]—e.g., to advantageously detect "additional significant absorbers." *E.g.*, Ex.1033, [0035], [0041] ("A sensor 300 has n LEDs 302, which…emit light of different wavelengths….[and can] include four, six, eight or sixteen LEDs of different wavelengths."). Anthony, ¶¶250-252.

q. [11] "The system of claim 8, wherein the output optical light comprises wavelengths between 600 nm and 1000 nm to measure a level of oxy-hemoglobin and deoxy-hemoglobin, and wherein the output signal corresponding to at least one of the optical wavelengths is used to improve measurement of the one or more physiological parameters using the output signal corresponding to the other two optical wavelengths."

See §§IX.B.3.o-p. **Lisogurski discloses that the output optical light** (*e.g.*, light emitted from "multiple LEDs" "into a subject's tissue"; §IX.B.3.c.[1.b]) **comprises wavelengths between 600 nm and 1000 nm to measure a level of oxy-hemoglobin and deoxy-hemoglobin** (*e.g.*, comprises wavelengths "between about 600 nm and about 700 nm" and "between about 800 nm and about 1000 nm" to measure "high" and "low" "blood oxygen saturation") **and wherein the output**

signal (*e.g.*, "processed signals"; §IX.B.3.e.[1.d]) **corresponding to at least one of the optical wavelengths is used to improve measurement of at least one of the one or more physiological parameters using the output signal corresponding to the other two optical wavelengths** (*e.g.*, "monitor[ing] activity with the more sensitive available wavelength" to compensate for different sensitivities to different wavelengths). Lisogurski, 10:48-64, 12:42-48 17:43-54, 24:58-25:5. Anthony, ¶¶253-254.

As discussed (§IX.B.3.n.[1.m])**, Lisogurski** teaches light source 130 with **three or more LEDs emitting at least red and IR lights with wavelengths between about 600-700nm and 800-1000nm, respectively**. Lisogurski, 10:48-64. **Lisogurski** also discloses "blood with a high blood oxygen saturation may have a relatively higher concentration of oxyhemoglobin and a relatively lower concentration of deoxyhemoglobin, resulting in higher IR sensitivity. Conversely, in some embodiments, blood with a relatively low blood oxygen saturation may absorb red light more strongly than infrared light[.] Thus, it may be desired to monitor activity with the more sensitive available wavelength." Lisogurski, 24:58-25:5. Anthony, ¶255. **Lisogurski** thus discloses multiple light sources and detectors to produce output signals (Lisogurski, 10:58-60, 12:42-48 17:43-54), one of which is used to complement the measurement obtained with other less sensitive

wavelengths (Lisogurski, 11:6-8, 24:58-25:5), and a POSITA would have understood (or at least found obvious) that **Lisogurski's** system includes an output signal corresponding to at least one of the optical wavelengths to improve measurement of the one or more physiological parameters using the output signal corresponding to the other multiple (e.g., two or more) optical wavelengths. *E.g.*, Ex.1033, [0033]-[0037]. Anthony, ¶¶255-257.

C. Ground 2: Lisogurski in view of LeBoeuf (Claims 2-4, 9-10, 15-17)

1. Overview of LeBoeuf

LeBoeuf discloses various interchangeable embodiments of a light guiding earbud including "one or more sensor modules that includes one or more sensors for sensing physiological information" such that "the earbud may function as a physiological monitor." LeBoeuf, [0025], [0026], [0029], [0073]. Anthony, ¶258.

LeBoeuf's "light guiding earbud 30" includes "base 50," "**earbud housing 16** extending outwardly from the base 50 that is configured to be positioned within an ear of a subject, and a cover 18 that surrounds the **earbud housing 16**." LeBoeuf, [0123]. Light guiding earbud 30 also includes "**optical detector[s] 26**" and "**optical emitter[s] 24,**" which may be LEDs. LeBoeuf, [0092]. **LeBoeuf** also discloses **optical detectors 26** and **optical emitters 24** disposed in an arc formation. LeBoeuf, FIG. 8B. **Earbud housing 16** is "at least partially reflective to scatter light" from **optical emitters 24** "within the cavity defined by the **earbud housing 16**," such that

light "can be focused on a particular region of the ear." LeBoeuf, [0017], [0123], [0125]; FIG. 8C. Anthony, ¶¶259-260.

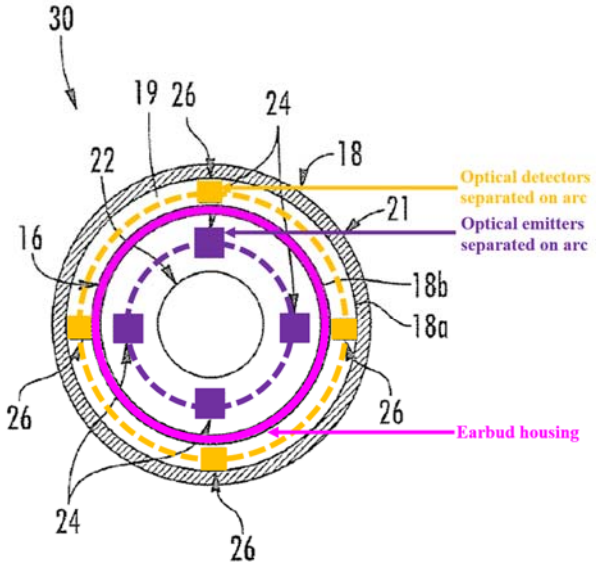

FIG. 8B

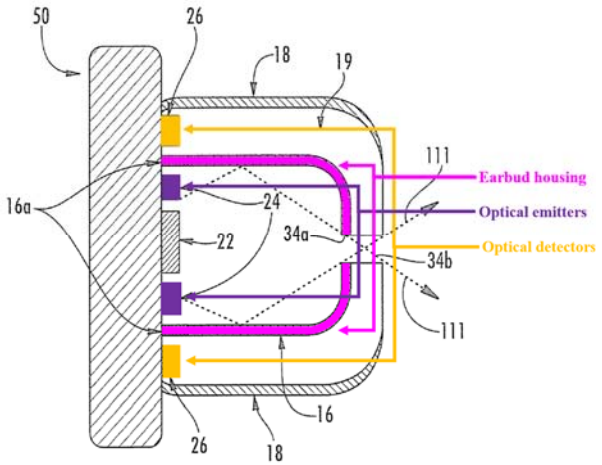

FIG. 8C

2. Motivation to Combine Lisogurski and LeBoeuf

Lisogurski and **LeBoeuf** are in the same field as the '455—which includes physiological monitoring—and are reasonably pertinent to the problems addressed by the '455—e.g., improving optical physiological monitoring. '455, 8:29-9:9; Lisogurski, 1:10-11; LeBoeuf, Abstract, [0025]-[0026]. Anthony, ¶261.

A POSITA would have been motivated to apply **LeBoeuf's** teaching to **Lisogurski's** system to include a plurality of semiconductor sources and spatially separated detectors arranged along one or more arcs to increase the accuracy and

reliability of physiological measurements. Both **Lisogurski** and **LeBoeuf** disclose physiological monitoring devices that can be worn on various parts of the body including the ear. Lisogurski, 4:6-20; LeBoeuf, [0006], [0010]. Further, **Lisogurski** discloses that "[a]ny suitable configuration of light source 316 and detector 318 may be used," and that "sensor unit 312 may include multiple light sources and detectors, which may be spaced apart." Lisogurski, 17:42-45. **Lisogurski's** system emits light into biological tissue, and a POSITA would have understood that light emitted into biological tissue undergoes significant scattering and absorption, and the reflected light exits the tissue at a wide range of angles. *See* Lisogurski, 11:9-27 ("[W]hen more light at a certain wavelength is absorbed or reflected, less light of that wavelength is received from the tissue by detector 140."); Anthony, ¶262. A POSITA would have recognized that a simply linear or closely grouped detector arrangement would fail to capture much of the angularly scattered light. Ex.1045, 4:14-65; Anthony, ¶263. Accordingly, a POSITA would have been motivated to apply **LeBoeuf's** teaching of spatially separated detectors located on one or more arcs to improve the detection of scattered light from biological tissue, and increase the signal-to-noise ratio of **Lisogurski's** wearable device. *See, e.g.*, LeBoeuf, [0105], FIG. 8B. Anthony, ¶¶262-264.

A POSITA would also have been motivated to apply **LeBoeuf's** teaching to

Lisogurski's system to incorporate a reflective surface for receiving and redirecting at least some of the output optical light to improve the performance of **Lisogurski's** physiological monitoring system. Anthony, ¶¶265-266. **LeBoeuf** teaches the use of reflective surfaces to receive the light from the semiconductor sources and deliver or redirect the light to the body of the subject. LeBoeuf, [0125]. A POSITA would have understood that **LeBoeuf's** reflective material enhances the efficiency of the light delivery from the light sources to the subject, by focusing the optical output light on a particular region of interest and reducing signals from regions not of interest. LeBoeuf, [0125] ("An advantage of this configuration is that...[it] may reduce unwanted optical signals from regions that may not be relevant to the physiological activity of interest."); *see also* Ex.1041, [0152] (a sensor surrounded by a "reflective" material may "help[ ] direct light to and/or from the sensor module [ ] and a blood flow region [i.e., measurement site] within the body part"); Anthony, ¶¶265-266. Accordingly, a POSITA would have been motivated to apply **LeBoeuf's** teaching of reflective surface to **Lisogurski's** wearable device to enhance signal measurement quality. Anthony, ¶¶265-266.

A POSITA would have had a reasonable expectation of success in applying **LeBoeuf's** teaching to **Lisogurski's** system. Both references teach applying these physiological measurement systems to ears, and thus it would have been

straightforward and advantageous to apply **LeBoeuf's** earbud sensor teachings to **Lisogurski's** sensor on patients' earlobes. Lisogurski, 4:6-20; LeBoeuf, [0006], [0010], [0025]-[0026]. Both references teach optical physiological measurement systems including multiple emitters and detectors spaced apart and emitters/light sources directing light towards a subject's tissue. *E.g.*, Lisogurski, 17:37-45; LeBoeuf, [0006], [0123], [0125]. Using different configurations for the light sources and detectors were well-known in the art. *E.g.*, Ex.1045, 4:14-65; Lisogurski, 17:42-45, LeBoeuf, [0123]. Likewise, use of reflective materials to focus light output was well-known in the art. *E.g.*, Exs.1041, [0152]; 1032, 16:23-57, FIGS. 4C, 4E. Thus, a POSITA would have known such a combination (yielding the claimed limitations) would predictably work and provide the expected functionality. Anthony, ¶¶264, 267-268.

3. Claim Limitations

a. [2] "The system of claim 1, wherein the plurality of semiconductor sources comprises six light emitting diodes, and wherein the plurality of semiconductor sources and the plurality of spatially separated detectors are located on one or more arcs."

See §§IX.B.3.a-n.[1.pre]-[1.m]. **Lisogurski discloses that the plurality of semiconductor sources comprises six light emitting diodes** (*e.g.*, six "light sources" that are LEDs; §IX.B.3.p.[8.m]) **and the plurality of spatially separated detectors** (*e.g.*, "multiple…detectors, which may be spaced apart"; §IX.B.3.g.[1.f]).

Anthony, ¶¶270-272.

LeBoeuf discloses the plurality of semiconductor sources (*e.g.*, "optical emitters 24" that are "light-emitting diode[s]") **and the plurality of spatially separated detectors** (*e.g.*, "optical detectors 26") **are located on one or more arcs** (*e.g.*, spatially separated in an arc). LeBoeuf, [0048]-[0050], [0092], [0123], FIGS. 8A-8B. Anthony, ¶273.

LeBoeuf discloses a light guiding earbud 30 including a base 50, with a **plurality of optical emitters 24, including LEDs, spatially separated in an arc** on the base 50 and a **plurality of optical detectors 26 spatially separated in another arc on the base 50**.[15] LeBoeuf, [0048]-[0050], [0092], [0123], FIGS. 8A-8B. Anthony, ¶¶274-275.

[15] Regardless of the outer bounds of the term "spatially separated detectors," its scope must at least include **Lisogurski's** disclosures as discussed in §IX.B.3.g.[1.f]. Anthony, ¶278. Regardless of the outer bounds of the term "the plurality of semiconductor sources and the plurality of spatially separated detectors are located on one or more arcs," the term must at least include **LeBoeuf's** disclosures because it discloses optical emitters and detectors spatially separated in a completely circular arc. LeBoeuf, Fig. 8B. Anthony, ¶¶277-279.

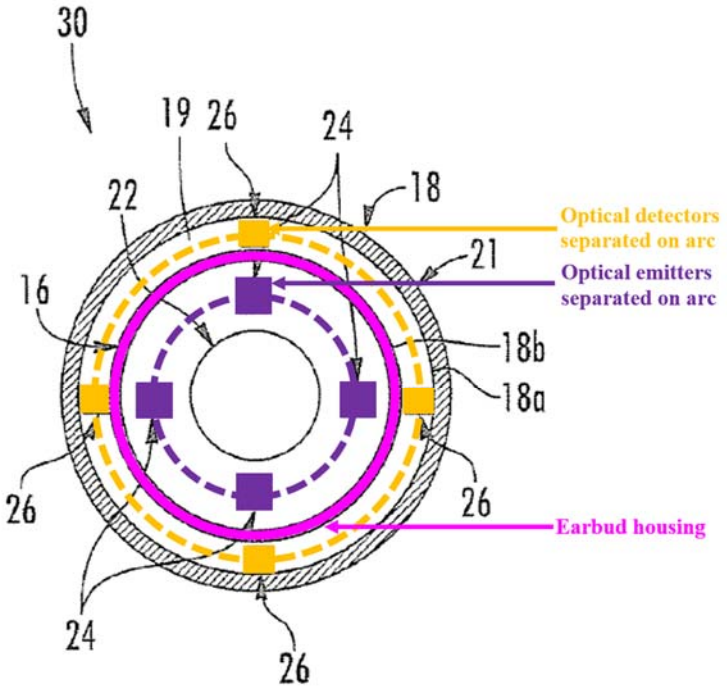

FIG. 8B

As discussed (§IX.C.2), a POSITA would have been motivated to apply **LeBoeuf's** arc arrangements to **Lisogurski's** system to improve accuracy of the measurement. Anthony, ¶276.

b. Claims 3-4, 9-10, and 16[16]

Aside from their dependencies, claims 3-4, 9-10, and 16 are met for the same

[16] Regardless of the outer bounds of the terms that have been identified as potentially indefinite in the Texas Case and recited in these limitations, their scope must at least include **Lisogurski's** and **LeBeouf's** disclosures, respectively, for the reasons discussed in §IX.C.3.a.[2]. Anthony, ¶289.

reasons discussed in corresponding claims as shown in the table below. Anthony, ¶¶280-292, 346-349.

3-4	11 (*see* §IX.B.3.q)
9	2 (*see* §IX.C.3.a)
10	[1.m] (*see* §IX.B.3.n)
16	[1.m], [11] (*see* §§IX.B.3.n, IX.B.3.q)

c. Claim 15[17]

Limitations [15.pre]-[15.o] are met for the reasons discussed in corresponding limitations in claims 1-3 and 8, which recite the identical limitations, as shown in the table below. Anthony, ¶¶293-345.

[15.pre]-[15.a]	[1.pre]-[1.a] (*see* §§IX.B.3.a-b)
[15.b]	[8.b] (*see* §IX.B.3.o)
[15.c]-[15.f]	[1.c]-[1.f] (*see* §§IX.B.3.d-g)
[15.g]	[8.g] (*see* §IX.B.3.o)
[15.h]	[1.h] (*see* §IX.B.3.i)
[15.i]-[15.k]	[8.i]-[8.k] (*see* §IX.B.3.o)
[15.l]	[1.l] (*see* §IX.B.3.m)
[15.m]	[8.m] (*see* §IX.B.3.p)
[15.n]	[2] (*see* §IX.C.3.a)
[15.o]	[3] (*see* §IX.C.3.b)

[17] Regardless of the outer bounds of the terms that have been identified as potentially indefinite in the Texas Case and recited in these limitations, their scope must at least include **Lisogurski's** and/or **LeBeouf's** disclosures, respectively, for the reasons discussed in §§IX.B.3.c.[1.b], IX.B.3.f-g.[1.e]-[1.f], IX.B.3.m.[1.l], and IX.C.3.a.[2], respectively. Anthony, ¶¶293-345.

d. [17] "The system of claim 16, wherein the wearable device further comprises a reflective surface to receive and redirect at least some of the output optical light from the plurality of semiconductor sources.

See §IX.C.3.b. **LeBoeuf discloses that the wearable device further comprises a reflective surface** (*e.g.*, "partially reflective" "earbud housing 16") **to receive and redirect at least some of the output optical light from the plurality of semiconductor sources** (*e.g.*, "focus[light] on a particular region of the ear"). LeBoeuf, [0017], [0123], [0125]; FIG. 8C. Anthony, ¶¶350-352.

LeBoeuf's "light guiding earbud 30," includes "base 50," "**earbud housing 16**" and "cover 18 that surrounds the **earbud housing 16**." LeBoeuf, [0123]. **Earbud housing 16** is "at least partially reflective to scatter light [from **optical emitters 24**] within the cavity defined by the **earbud housing 16**," and light "can be focused on a particular region of the ear." LeBoeuf, [0123], [0125]; FIG. 8C; *see also* LeBoeuf, [0017] ("[A] light reflective material is on at least a portion of one or both of the inner and outer surfaces of the light-guiding cover."), [0133]. Anthony, ¶¶353-354.

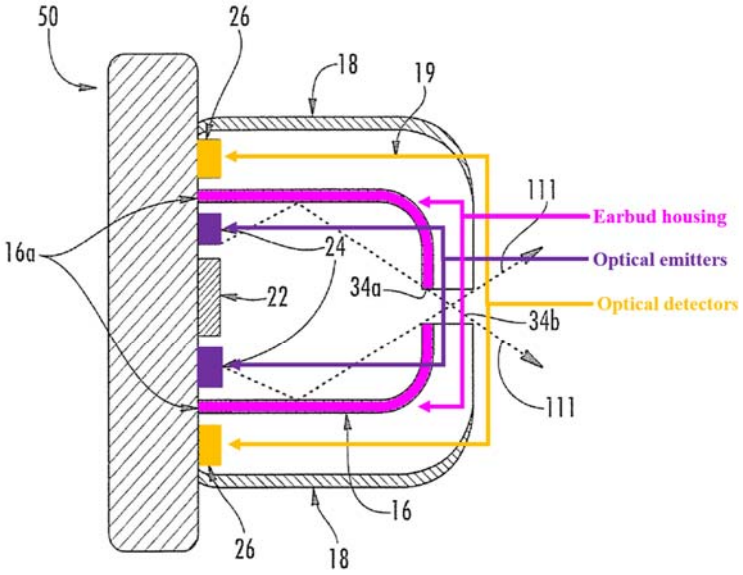

FIG. 8C

As discussed (§IX.C.2), a POSITA would have been motivated to apply **LeBoeuf's** reflective surface teachings to **Lisogurski's** system to enhance the efficiency of the light delivery. Anthony, ¶355.

D. Grounds 3-4: Grounds 1-2 in further view of Tran (Claims 1, 5-8, 12-15, 18-20)

1. Overview of Tran

Tran's patient monitoring system includes a monitoring device, such as a watch, that collects and transmits patient health data to a server, and a statistical analyzer that analyzes the data including pulse oximetry measurements. Tran, 3:6-13, 8:28-53, 9:23-54, 11:1-31, 25:36-43, 26:17-29, 36:62-37:13, 46:25-42, 54:14-57:13, 60:58-61:37, 74:29-67. **Tran's** statistical analyzers can "track the

patient's risk of stroke or heart attack." Tran, 54:35-36, 86:44-87:3. The analyzers use "artificial neural networks," a form of artificial intelligence ("AI"), to help classify potential risks to warn patients or health-care providers. Tran, 11:13-16, 22:24-28, 74:45-46, 75:18-20, 94:57-65. The monitoring device can be used with a "smart phone[ ]," which remotely collects and transmits data. Tran, 33:50-34:40. Anthony, ¶¶356-360.

2. Motivation to Combine Lisogurski (alone or in view of LeBoeuf) and Tran

Like **Lisogurski**, and **LeBoeuf**, **Tran** is analogous art, in the same field as the '455—including physiological monitoring—and is reasonably pertinent to the problems addressed by the '455—e.g., improving optical physiological monitoring. *See* §IX.C.2; Tran, 1:10-33, 2:66-67, 4:30-36, 36:62-37:12. Anthony, ¶361.

A POSITA would have been motivated to apply **Tran's** smart phone teaching to **Lisogurski's** monitor 104/314. Anthony, ¶¶362-364. **Tran** explicitly discloses a "smart phone[]." Tran, 34:4-25. And, as the Board recognized, a POSITA would have found it obvious to use "Tran's smartphone…in place of Lisogurski's monitoring device, which Lisogurski describes as a computing device that is portable, battery powered, and has a touchscreen," especially because "Tran teaches using a smartphone with a portable, wearable sensor to send data to remote devices and other monitoring devices, facilitating the detection of emergencies in a manner

consistent with the use of smartphones and tablets." '484-FWD, 47-48 (citing '484-Pet. at 60-61 (citing Tran, 33:58-34:40)). Anthony, ¶¶362-364.

A POSITA would have also looked to **Tran** to "improve how the data obtained by **Lisogurski's** device is stored and analyzed." '484-FWD, 46-47. As the Board also found, **Lisogurski's** system "process[es] its collected data to track patient status," and a POSITA "would have been motivated to seek additional ways to use tracked data, such as pulse oximetry data." '484-FWD, 46-47 (citing '484-Pet., 59); Tran, 22:23-28, 36:62-37:13; Lisogurski, 15:43-65, 18:58-65, 10:48-64. The Board further noted that, in looking for ways to improve **Lisogurski's** system, a POSITA "would have looked to Tran" for "using [an] artificial neural network to analyze such data and provide warnings." '484-FWD, 46-47 (citing '484, Pet., 59). Indeed, use of AI, including artificial neural networks, to improve the reliability and accuracy of data analysis—particularly in real-time monitoring of physiological data—was well-known in the art. Exs.1048, 95:13-15; 1049, [0148]; 1064, 3:14-16; 1065, 2:25-39. Anthony, ¶¶366-368.

A POSITA would have been motivated to modify **Lisogurski's** system with **Tran's** teachings to apply one or more pattern identification, classification, or regression signal processing methodologies to at least a part of the output signal. **Lisogurski** discloses an "algorithm" "to determine" physiological parameters

including, *e.g.*, "a regression based algorithm." Lisogurski, 9:36-45. As the Board found, a POSITA would have been motivated to "improve how the data obtained by Lisogurski's device is stored and analyzed." '484-FWD, 46-47. A POSITA would thus have looked to **Tran's** data analysis technique to achieve such improvements. Anthony, ¶369. For example, as the Board noted, a POSITA would have understood that **Tran's** pattern identification and classification analyze certain vital signs of patients, allowing **Lisogurski's** system to recognize and flag dangerous conditions. '484-FWD, 52-53. A POSITA would have also understood that **Tran's** regression processing methodologies would result in more accurate analysis in **Lisogurski's** system. Anthony, ¶¶369-371.

A POSITA would have had a reasonable expectation of success in applying **Tran's** teaching to **Lisogurski's** system. Both references teach optical physiological measurement devices and techniques. *E.g.*, Lisogurski, 1:10-11; Tran, 36:62-37:12. A POSITA would have understood that **Tran's** smartphone would be used for the same purpose as **Lisogurski's** monitor. Anthony, ¶365. Further, data analysis techniques such as pattern identification, classification, and signal regression, and the use of AI to perform these techniques were well-known in the art and easily implemented and/or applied to **Lisogurski's** system. *E.g.*, Exs.1042, 17:10-37, 35:1-36:12 (pattern recognition); 1043, 28:9-29:40, 31:29-53, (pattern

classification); 1050, 24:1-12, 25:16-32:61 (signal regression); 1044, 8:3-11, 45:6-11, 45:65-46:12 (AI); 1051, 2:21-4:36; Anthony, ¶371. Thus, a POSITA would have known such a combination (yielding the claimed limitations) would predictably work and provide the expected functionality. Anthony, ¶¶365, 372.

LeBoeuf's teaching as applied to the spatial configuration of the light sources and detectors and physical configuration of **Lisogurski's** sensor unit (§IX.C) do not concern the aspects of **Lisogurski's** system (i.e., the monitor and/or software within the monitor) where **Tran's** teaching would be applicable, and the above-discussed motivation and expectation of success would remain the same for **Lisogurski's** system applying **LeBoeuf's** teaching. Anthony, ¶373.

3. Claim Limitations

a. [1.pre], [8.pre], [15.pre]: "smart phone or tablet"

As discussed (§§IX.B.3.a, IX.B.3.o; IX.C.3.c), **Lisogurski** teaches and at least renders obvious the "smart phone"/"tablet" limitations in [1.pre], [8.pre], and [15.pre]. Anthony, ¶375.

To the extent additional disclosure is required for the "smart phone or tablet" limitation, Tran discloses a smart phone (e.g., "smart phone"). As the Board found, **Tran** discloses using a "smartphone with a portable, wearable sensor to send data to remote devices and other monitoring devices," and that a POSITA would have been motivated to apply **Tran's** teaching of a smart phone to **Lisogurski**

to "facilitat[e] the detection of emergencies in a manner consistent with the use of smartphones and tablets" and would have had a reasonable expectation of success in doing so, as the Board also already found. '484-FWD, 47-48 (citing '484-Pet., 60-61 (citing Tran, 33:58-34:40)). The same finding would apply to **Lisogurski** alone or in view of **LeBoeuf**. §IX.D.2. Anthony, ¶376

b. [5.a] "The system of claim 4, wherein the system is configured to use artificial intelligence to process some of the at least a portion of the output signal; and"

See §IX.C.3.b.[4]. As the Board found, **Lisogurski** in view of **Tran** renders obvious [5.a]. *See* '484-FWD, 48-49. To meet "**the wearable device is configured to use artificial intelligence** in making decisions associated with **at least a portion of the output signal**" ('484 claims 2/18), the Board relied on **Tran's** disclosure of "feeding data from a wearable patient monitoring device such as those disclosed by Lisogurski, to a statistical analyzer, such as Tran's neural network, which is a form of artificial intelligence," and **Tran's** further disclosure of "analy[zing] patient data [to] flag potentially dangerous conditions that can be specified as an event or pattern that can harm the patient." '484-FWD, 48-49 (citing '484-Pet., 61 (citing Tran, 3:6-13, 9:23-54, 11:6-30, 22:24-30, 85:60-61, 87:33-37, 88:48-50, 90:58-61)). Anthony, ¶¶377-381.

As discussed (§IX.D.2), a POSITA would have been motivated to apply

Tran's AI teachings to **Lisogurski** either alone or in view of **LeBoeuf** such that **Lisogurski** performs more accurate measurement and analysis. Anthony, ¶382.

c. [5.b] "wherein the system is configured to perform pattern identification or classification, or wherein the system is configured to apply one or more regression signal processing methodologies to at least a part of the output signal"

As found in '484-IPR, **Lisogurski** in view of **Tran** renders obvious "**wherein the system is configured to perform pattern identification or classification**." *See* '484-FWD, 52-53; '484-RFWD, 11-12. To meet **"configured to perform pattern identification or classification"** ('484 claim 4/12/21), the Board relied on **Tran's** disclosure that "neural networks are used to recognize patterns." '484-FWD, 53 (citing '484-Pet., 63-65 (citing Tran, 9:23-54, 11:1-8, 11:16-19, 22:23-59, 23:4-16, 23:39-50, 24:45-48, 24:58-60, 80:24-81:3)); '484-RFWD, 11-12 (agreeing that limitation was met based on '484-FWD, 53). The Board also relied on **Tran's** teachings of "using the neural network with a Hidden Markov Model (a derived set of reference pattern templates) to perform pattern matching and pattern identification or classification." '484-FWD, 53 (citing '484-Pet., 64 (citing Tran, 9:23-54, 11:1-8, 11:16-19, 22:23-59, 23:4-16, 23:39-50, 24:45-48, 24:58-60, 80:24-81:3)); '484-RFWD, 11-12 (agreeing that limitation was met based on '484-FWD, 53). Anthony, ¶¶383-386.

Lisogurski discloses the system configured to apply one or more

regression signal processing methodologies (e.g., "regression based algorithm") **to at least a part of the output signal**. Lisogurski, 5:25-47, 9:36-45. Anthony, ¶387.

For example, **Lisogurski's** "system may vary the algorithm used to determine a physiological parameter based, in part, on the [CCM] technique." Lisogurski, 5:25-47, 9:36-38. Specifically, **Lisogurski** teaches using a "regression based" blood oxygen saturation detection algorithm when CCM technique detects the entire pulse in a pulse cycle. Lisogurski, 9:38-45. Anthony, ¶388.

To the extent additional disclosure is required, Tran also discloses the system configured to apply one or more regression signal processing methodologies (*e.g.*, apply "regression methods") **to at least a part of the output signal** (*e.g.*, "data"). Tran, 3:64-65, 21:58-60, 22:23-28, 50:16-54:34, 86:48-51. Anthony, ¶389.

Tran discloses using "data driven analyzers" including "regression methods" applied to output data to track a patient's "risk of stroke or heart attack." Tran, 3:64-65, 54:35-40, 50:16-54:34 (collecting physiological data to monitor and predict stroke attack); *see also* Tran, 21:58-60, 22:23-28, 54:6-13, 86:48-51. A POSITA would have understood (or at least found it obvious) that a regression method model is a regression signal processing methodology. Anthony, ¶390.

As discussed (§IX.D.2), a POSITA would have been motivated to apply **Tran's** pattern identification or classification teachings and regression signal processing teachings to **Lisogurski** either alone or in view of **LeBoeuf** such that **Lisogurski** performs more accurate measurement and analysis. Anthony, ¶391.

d. [6] "The system of claim 5, wherein the wearable device further comprises a reflective surface to receive and redirect at least some of the output optical light from the plurality of semiconductor sources."

See §§IX.D.3.b-c.[5.a]-[5.b]. **Lisogurski** in view of **LeBouef** meets [6] for the reasons discussed in [17]. *See* §IX.C.3.d.[17]. Anthony, ¶¶392-393.

e. [7] "The system of claim 6, wherein the wearable device is further configured to increase the signal-to-noise ratio by increasing a pulse rate of at least one of the semiconductor sources from an initial non-zero pulse rate."

See §IX.D.3.d.[6]. As the Board already found, **Lisogurski** discloses [7]. *See* '484-FWD, 28-36 (finding **Lisogurski's** sampling rate and cardiac cycle modulation both meet substantially identical); '533-FWD, 26-30 (same). Anthony, ¶¶394-404. To meet "wherein the light source is configured to further improve **the signal-to-noise ratio** of the input optical beam reflected from the tissue **by increasing a pulse rate of at least one of the** plurality of **semiconductor sources from an initial non-zero pulse rate**" ('484 claim 1), the Board relied on two separate rationales: improving signal-to-noise ratio by (1) correlating sampling rate and LED firing

(pulse) rate and (2) using cardiac cycle modulation (CCM) to vary the light drive signal to remain synchronous with a subject's heart rate. '484-FWD, 31-36 (citing '484-Pet. 22, 45, 48-51, '484-Pet.-Reply, 5-9). Anthony, ¶¶394-404.

Regarding the "sampling rate" rationale, the Board agreed that **Lisogurski** teaches "correlat[ing] sampling rate and LED firing (*pulse*) rate," where "decreasing the duration of the 'off' periods (i.e., increasing the emitter firing rate) relates to an increased sampling rate." '484-FWD 31-32 (citing '484-Pet., 22, 49-51 (citing Lisogurski, 2:1-2, 5:55-6:6, 8:29-35, 9:46-52, 11:43-46, 11:52-55, 25:46-55, 27:44-52, 33:47-49, 33:56-58, 35:7-9, 35:27-31, 37:6-22) and '484-Pet.-Reply, 5 (citing Lisogurski, 35:24-31, Fig. 2A)); '533-FWD, 26-30; Anthony, ¶¶395-396, 398-399, 403. Further, "by increasing firing rate from an initial rate to correlate the firing rate to the sampling rate of an analog-to-digital (A-D) converter, Lisogurski improves signal-to-noise ratio by spreading the noise across more samples." '484-FWD, 30 (citing '484-Pet., 49-51); Lisogurski, 9:46-52, 37:6-22; *see also* Lisogurski, 35:16-17, 35:28, 35:20, claim 7; Anthony, ¶¶395-396, 398. Because **Lisogurski** discloses LEDs with a firing (pulse) rate (*i.e.*, a duration of the "off" periods) and increasing that firing rate (i.e., decreasing that duration), **Lisogurski** teaches or at least renders obvious increasing the firing rate of its LEDs from a non-zero pulse rate. Anthony, ¶¶395-396, 398-399, 403.

Regarding the "CCM" rationale, the Board found that **Lisogurski** discloses that "the application of CCM [cardiac cycle modulation] alone improves signal-to-noise." '484-FWD, 32-36 (citing '484-Pet., 50-51 (citing Lisogurski, 9:57-60, 25:46-61, 25:66-26:14, 42:50-54) and '484-Pet.-Reply, 6-8 (citing Lisogurski, 25:49-55; 25:66-26:14, 31:11-24, 31:39-55, 42:50-54) and Lisogurski, 41:40-42:58); '533-FWD, 26-30. Anthony, ¶¶395, 397-399. According to the Board, "Lisogurski teaches correlating LED pulse rate and cardiac cycle rate, for example by increasing LED pulse rate to match an increased cardiac cycle rate." '533-FWD, 29; Lisogurski, 25:46-61 (light drive parameters, such as "firing rate," are "varied with a period the same as or closely related to the period of the cardiac cycle, thus generating a cardiac cycle modulation"). By increasing the pulse rate as the subject's heart rate increases, **Lisogurski** teaches improving SNR by reducing noise by 1-4%. '484-FWD, 30 (citing '484-Pet. 50-51); Lisogurski, 42:50-54 ("cardiac cycle modulation techniques may provide improved performance" "in the presence of moderate noise"), 25:46-26:14; *see also* '533-FWD, 27-30. Anthony, ¶¶295, 397-399. Because the pulse rate synchronizes with the subject's non-zero heart rate, and increases as the subject's heart rate increases, **Lisogurski** teaches or at least renders obvious increasing the pulse rate from an initial non-zero pulse rate. Lisogurski, 25:46-52, 35:16-17, 35:28, claim 7. Anthony, ¶¶295, 397-399, 402-404.

f. Claims 12-14, and 18

Aside from their dependencies, claims 12-14, and 18 are met for the same reasons discussed in corresponding claims as shown in the table below. Anthony, ¶¶405-413.

12, 18	5 (*see* §§IX.D.3.b-c)
13	17 (*see* §IX.C.3.d)
14	7 (*see* §IX.D.3.e)

g. [19] "The system of claim 18, wherein the system is at least in part configured to detect an object, and a property of at least some of the output signal is compared by at least one of the wearable device, the smart phone, and the tablet to a threshold."

See §IX.D.3.f. **Lisogurski** discloses and at least renders obvious [19]. *See* '484-FWD, 49-52 ("Lisogurski discloses that the wearable device is configured to detect an object," where "detect an object" means "to discover or notice the existence or presence of something"), '484-RFWD, 4-7 (agreeing that claim 8, reciting in part identifying "a property of at least some of the output signal is compared by at least one of the wearable device, the smart phone or tablet to a threshold" is unpatentable). Anthony, ¶¶414-418.

To meet **"wherein the wearable device is at least in part configured to detect an object"** ('484 claim 16), the Board construed "detect an object" as "discover or notice the existence or presence of something." '484-FWD, 50-51. The Board relied on **Lisogurski's** disclosure of "generating a probe off signal when the

sensor falls off the subject, [which] necessarily implies that the system recognizes the presence of an object, as there is no error indication if an object is present," and "agree[d] with Petitioner that Lisogurski discloses that the wearable device is configured to detect an object." '484-FWD, 50-51 (citing '484-Pet., 62 (citing Lisogurski, 36:66-37:2)). Anthony, ¶¶414-418.

The Board also previously found **"a property of at least some of the output signal is compared by at least one of the wearable device, the smart phone or tablet to a threshold"** ('483, claim 8) is met by **Lisogurski**. '484-RFWD, 4-7; *see also* '484-FWD, 49-52. **Lisogurski** discloses, *e.g.*, comparing blood oxygen saturation "to a threshold or target value, such as threshold 830," and changing the device's mode of operation based on the results. Lisogurski, 24:41-57; *see also* Lisogurski, 9:46-52, 37:8-14, 40:42-41:39 (disclosing additional comparison analyses). A POSITA would have understood that this comparison would be executed by the processor 172 in the monitor 104 that "receive[s] and process[es] physiological signals" and "determine[s] one or more physiological parameters based on the received physiological signals." Lisogurski, 10:42-46, 11:28-32, 14:56-64, Fig. 1. Anthony, ¶¶414-418.

h. [20] "The system of claim 19, wherein the wearable device is further configured to increase the signal-to-noise ratio by increasing a pulse rate of at least one of

> **the semiconductor sources from an initial non-zero pulse rate.”**

See §IX.D.3.g.[19]. **Lisogurski** meets [20] for the reasons discussed in [7]. *See* §IX.D.3.e.[7]. Anthony, ¶¶419-421.

E. Grounds 5-8: Grounds 1-4 in further view of Carlson (claims 1-20)

1. Overview of Carlson

Carlson discloses an “optical pulsoximetry [device] for non-invasive measurement of pulsation and oxygen saturation in arterial human or animal blood.” Carlson, [0002]; *see also* Carlson, [0033], [0049], Fig. 2. Anthony, ¶422.

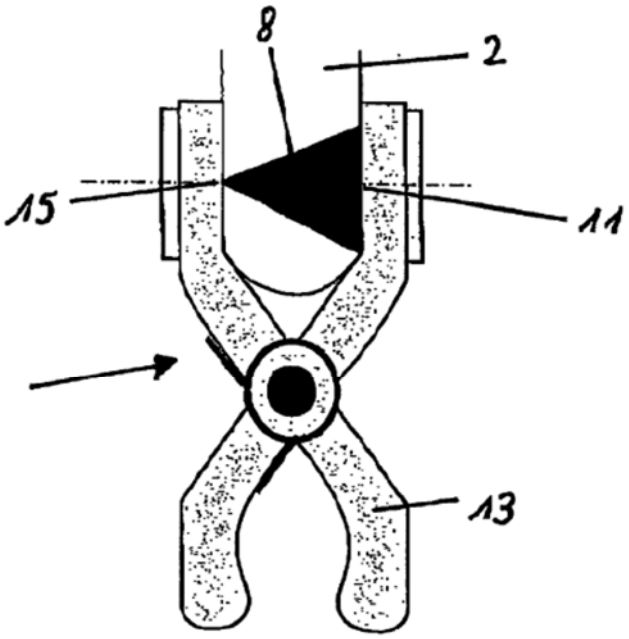

Figure 2

Carlson's ear clip sensor 1 includes light source 15, which transmits light beam 8 through a patient's earlobe 2, and light detector 11 to detect the transmitted light. Carlson, [0049]. Light source 15 emits light at two wavelengths, 660 and 890nm, and includes two LEDs. Carlson, [0050]. "[L]ight is emitted from the two LEDs 15 and is shaped by the two beam shaping elements or lenses 21 to be guided as beams 12 through the earlobe 2." Carlson, [0062]. '533-FWD, 18-20. Anthony, ¶423.

Carlson teaches that patient mobility can cause "signal instability and insufficient robustness versus environmental disturbances" including ambient light, such as sunlight, that "influenc[es] the measurement of the pulsoximeter sensor." Carlson, [0004], [0068]. **Carlson** teaches using a "beam-shaping element," such as lens, to direct the LED light source into tissue "to increase the optical signal power, detected by the pulsoximeter sensor, and thus increasing the Signal/Noise—and signal/Background ratio" by "a factor of 5." Carlson, [0014]. '533-FWD, 18-20. Anthony, ¶424.

Carlson provides "optical and/or electronic means for increasing the Signal-to-Noise ratio (S/N)...in rough (optical) environmental conditions" such as emitting pulsed light from its LEDs. Carlson, [0010], [0069]. **Carlson** "temporarily modulate[s] the optical radiation of the LED at the carrier frequency f_C in order to shift the power spectrum of the pulsoximeter signals into a higher frequency range

where environmental optical radiation is unlikely." Carlson, [0065]. Temporary modulation frequency f_C is "outside the frequency spectrum of sunlight and of ambient light." Carlson, [0069]. This allows easy discrimination of pulsoximeter signals from environmental signals, *e.g.*, sunlight and ambient light, and "increas[es] significantly the Signal-to-Noise and Signal-to-Background ratio." Carlson, [0069]. '533-FWD, 18-20. Anthony, ¶425.

2. Motivation to Combine

Like **Lisogurski**, **LeBoeuf**, and **Tran, Carlson** is analogous art, in the same field as the '455—including physiological monitoring—and is reasonably pertinent to the problems addressed by the '455—e.g., improving optical physiological monitoring. *See* §§IX.C.2, IX.D.2; Lisogurski, 1:10-11, 9:46-60, 14:40-55, 26:5-14; Carlson, [0002], [0004], [0006]-[0008], [0010], [0054]. Anthony, ¶426.

As the Board found, "a [POSITA] would have incorporated Carlson's lenses 21 into Lisogurski's wireless sensor 102/312 to increase its optical signal power and signal-to-noise ratio without increasing its actual power." '533-FWD, 37. As the Board explained, **Carlson's** lenses 21 "increase the optical signal power without increasing the actual power used by the system," thereby "increasing the Signal/Noise...ratio" and "Lisogurski teaches the importance of both reducing power consumption and increasing signal-to-noise ratio" such that a POSITA "would have incorporated Carlson's lenses 21 into Lisogurski's wireless sensor 102/312 to

increase its optical signal power and signal-to-noise ratio without increasing its actual power." '533-FWD, 37; Carlson, [0010], [0014]; Lisogurski, 14:40-55, 37:6-20; *see also* '484-FWD, 23, 26-27. Anthony, ¶¶427-429.

A POSITA would have had a reasonable expectation of success in applying **Carlson's** teaching to **Lisogurski's** system. Both **Lisogurski** and **Carlson** teach optical physiological measurement systems utilizing LEDs as light sources, and using lenses to focus the light of LEDs was well-known in the art, such that a POSITA would have found it routine, straightforward, and advantageous to apply **Carlson's** lenses to **Lisogurski's** optical physiological measurement. Ex.1038, 765; Lisogurski, 1:10-11, 17:37-45, 10:48-56; Carlson, [0014], [0054]. Anthony, ¶430. Thus, a POSITA would have known such a combination (yielding the claimed limitations) would predictably work and provide the expected functionality. Anthony, ¶430.

As the Board further agreed, **Lisogurski** "can readily be modified to incorporate the Carlson technique" of "us[ing] a light source modulation to temporarily modulate the optical radiation of the LED" at a frequency that "is outside the frequency spectrum of sunlight and of ambient light", given that **Lisogurski** teaches that the firing rate of the LEDs can be adjusted in response to changes in environmental conditions." '533-FWD, 33 (quoting '533-Pet., 38). Anthony, ¶431.

As the Board noted, both **Carlson** and **Lisogurski** "recognize the problem of ambient light noise 'and the need to offset its negative impact on the signal-to-noise ratio'" such that a POSITA "would have found it obvious to configure Lisogurski to increase the firing rate (frequency) of LEDs as taught by Carlson." '533-FWD, 31-34 (quoting '533-Pet., 38 (citing Lisogurski, 9:46-60; Carlson, [0067]-[0069]) & '533-Pet., 39); *see also* Lisogurski, 1:67-2:3, 9:46-60, 37:6-18; Carlson, [0068]-[0069], [0064]. Anthony, ¶¶431-432.

A POSITA would have had a reasonable expectation of success in applying **Carlson's** teaching of increased firing rate of LEDs to **Lisogurski's** system. As the Board found, both references teach techniques for changing the operation of their light sources to reduce the effects of ambient light and noise, and a POSITA would have understood that any one of these techniques is a common substitute for another. '533-FWD, 33-34 (citing '533-Pet., 35, 37 (citing Lisogurski, 25:49-55, 27:44-52, 37:6-22; Carlson [0069])); Anthony, ¶433. Thus, a POSITA would have known such a combination (yielding the claimed limitations) would predictably work and provide the expected functionality. Anthony, ¶433.

Carlson's teaching concerns the firing rate of **Lisogurski's** light source, **LeBouef's** teaching concerns the spatial configuration of the light sources and detectors, and the housing of **Lisogurski's** sensor unit (§IX.C), and **Tran's**

teachings as applied to **Lisogurski** concern the monitor and/or software within the monitor (§IX.D), such that the above-discussed motivations and reasonable expectation of success would remain the same for **Lisogurski's** system alone or in view of **LeBoeuf** and/or **Tran**. Anthony, ¶434.

3. Claim Limitations

a. [1.c], [8.c], [15.c]

As discussed (§§IX.B.3.d, o; IX.C.3.c), **Lisogurski** teaches and at least renders obvious the "lens" limitations in [1.c], [8.c], and [15.c]. Anthony, ¶436.

To the extent additional disclosure is required for the "lens" limitations, as the Board already found, Carlson discloses lenses (*e.g.*, "lenses 21") **configured to receive at least a portion of the output optical light and to deliver a lens output light to tissue** (e.g., "light…is shaped by…lenses 21 to be guided as beams 12 through the earlobe 2"). Carlson, [0002], [0010], [0013]-[0014], [0024], [0035], [0049], [0054], [0062]; Fig. 4; '484-FWD, 23, 26-27; '533-FWD, 36-37. As found in the '484 and '533-IPRs, **Carlson** discloses lenses 21 that "can be diffractive or refractive and direct the emitted optical radiation into human or animal tissue." '484-FWD, 23, 26-27 (citing '484-Pet., 31-33 (citing Carlson [0010], [0013]-[0014], [0024], [0054], [0062], Fig. 4); '533-FWD, 36-37; *see also* Carlson, [0002], [0035], [0049]. The Board further found a POSITA would have been motivated to apply **Carlson's** lens teachings to **Lisogurski** to increase optical signal power and signal-

to-noise ratio without increasing its actual power. ’484-FWD, 23 (citing ’484-Pet., 32-33 (citing Carlson [0014], [0024], [0062] and Lisogurski, 6:3-6, 9:49-60, 13:60-14:10, 14:40-55, 37:6-20). The same finding would apply to **Lisogurski** alone, or in view of **LeBoeuf** and/or **Tran.** §IX.E.2. Anthony, ¶¶437-442**.**

b. [7], [14], [20]

As discussed (§§IX.D.3.e.[7], f.[14], h.[20]), **Lisogurski** teaches and at least renders obvious the “pulse rate” limitations in [7], [14], [20]. Anthony, ¶¶443.

To the extent additional disclosure is required for the “pulse rate” limitations, as the Board already found, Carlson discloses wherein the wearable device is further configured to increase the signal-to-noise ratio (e.g., “increase[] significantly the Signal-to-Noise and Signal-to-Background ratio”) **by increasing a pulse rate of at least one of the semiconductor sources from an initial non-zero pulse rate** (e.g., “shift[ing] the frequency of the emitted light” so it is “substantially outside of frequency of noise and/or environmental signals”)**.** Carlson, [0062]-[0069]; ’533-FWD, 33-35; ’484-FWD, 36-43. Anthony, ¶444.

The Board agreed that **Carlson** teaches “pulsing the LEDs reduces the effects of ambient light including sunlight” and thus improves signal-to-noise ratio by choosing the pulse rate “outside the frequency spectrum of sunlight and of ambient light.” ’533-FWD, 33-35 (quoting ’533-Pet., 37-38); *see also* ’484-FWD, 36-43; Carlson, [0062]-[0069]. As the Board found, **Lisogurski** in view of **Carlson** render

obvious this limitation because "both references recognize the problem of ambient light noise 'and the need to offset its negative impact on the signal-to-noise ratio.'" *See* '533-FWD, 30-34 ("Lisogurski's wireless sensor 102/312, when combined with the…the teachings of Carlson, meets" substantially identical claim language); '484-FWD, 36-43. Anthony, ¶¶445-447.

The same finding would apply to **Lisogurski** alone, or in view of **LeBoeuf** and/or **Tran.** §IX.E.2. Anthony, ¶448.

X. SECONDARY CONSIDERATIONS

There is no evidence in the '455's prosecution history or elsewhere supporting any secondary considerations arguments, or evidence of nexus to any challenged Claim. *See generally* '455FH; Anthony, ¶449. Indeed, as demonstrated by the prior art referenced herein, any purported solutions to problems or unexpected results in the '455 were already well-known. Anthony, ¶449.

To the extent that PO contends that the accused products in the Texas Case are infringing and thus demonstrate commercial success, any such conclusory allegations would fail to provide any indication that the Claims are non-obvious. Such conclusory assertions would not demonstrate that Petitioners' products infringe, let alone show any nexus between any alleged commercial success and the Claims, or that any alleged success is due to an allegedly claimed component instead of the many unclaimed features of the accused products.

To the extent PO asserts the existence of any secondary considerations in its responses, Petitioners reserve the right to address any such evidence. Anthony, ¶450.

XI. CONCLUSION

Substantial, new, and noncumulative technical teachings have been presented for each Challenged Claim, which are rendered obvious for the reasons set forth above. Anthony, ¶¶69-448. There is a reasonable likelihood Petitioners will prevail as to each of these Claims. *Inter partes* review of Claims 1-20 of the ’455 is accordingly requested.

Dated: August 5, 2025

Respectfully submitted,

By: /*James L. Davis, Jr.*/
Name: James L. Davis, Jr.
Registration No. 57,325
ROPES & GRAY LLP

Lead Counsel for Petitioners

CERTIFICATE OF COMPLIANCE

Pursuant to 37 C.F.R. § 42.24(a) and (d), the undersigned hereby certify that the Petition for *Inter Partes* Review complies with the type-volume limitation of 37 C.F.R. § 42.24(a)(1)(i) because, exclusive of the exempted portions, it contains 13,995 words as counted by the word processing program used to prepare the paper.

Dated: August 5, 2025

Respectfully submitted,

By: /*James L. Davis, Jr.*/
Name: James L. Davis, Jr.
Registration No. 57,325
ROPES & GRAY LLP

Lead Counsel for Petitioners

CERTIFICATE OF SERVICE

I hereby certify that on August 5, 2025, I caused a true and correct copy of the foregoing Petition for *Inter Partes* Review of U.S. Patent No. 11,160,455 and supporting exhibits to be served via Federal Express on the Patent Owner at the following correspondence address of record as listed on Patent Center:

109543 - Brooks, Kushman P.C./Cheetah Omni MedSci
150 W 2nd St., Suite 400N
Royal Oak, MI 48067
UNITED STATES

———

A courtesy copy was also sent via electronic mail to Patent Owner's litigation counsel at the following addresses:

William E. Davis III
bdavis@davisfirm.com
DAVIS FIRM, PC

Daniel S. Stringfield
dstringfield@nixonpeabody.com
Timothy P. Maloney
tmaloney@nixonpeabody.com
Daniel D. Georgiev
dgeorgiev@nixonpeabody.com
Peter Krusiewicz
pkrusiewicz@nixonpeabody.com
NIXON PEABODY LLP

Corey T. Leggett
cleggett@nixonpeabody.com

NIXON PEABODY LLP

Elizabeth M. Chiaviello
echiaviello@nixonpeabody.com
Benjamin R. Holt
bholt@nixonpeabody.com
NIXON PEABODY LLP

Dated: August 5, 2025

By: /*James L. Davis, Jr.*/
Name: James L. Davis, Jr.
Registration No. 57,325
Lead Counsel for Petitioners