UNITED STATES PATENT AND TRADEMARK OFFICE

BEFORE THE PATENT TRIAL AND APPEAL BOARD

_____

SAMSUNG ELECTRONICS CO., LTD.,
SAMSUNG ELECTRONICS AMERICA, INC.,
FOSSIL GROUP, INC.,
FOSSIL STORES I, INC.,
FOSSIL PARTNERS, L.P.,
OURA HEALTH OY, AND
ONEPLUS TECHNOLOGY (SHENZHEN) CO., LTD.

Petitioners,

v.

OMNI MEDSCI, INC.,

Patent Owner.

_____

Case IPR2025-01251
Patent No. 10,874,304

_____

PETITION FOR *INTER PARTES* REVIEW

TABLE OF CONTENTS

I. INTRODUCTION 1
II. MANDATORY NOTICES UNDER 37 C.F.R. §42.8 3
A. Real Party-in-Interest 3
B. Related Matters 3
C. Lead and Back-Up Counsel 5
III. PAYMENT OF FEES 6
IV. REQUIREMENTS FOR *INTER PARTES* REVIEW 7
A. Grounds for Standing 7
B. Identification of Challenge 7
1. The Specific Art on Which the Challenge Is Based 7
2. Statutory Grounds on Which the Challenge Is Based 8
V. '304 AND PROSECUTION HISTORY 8
A. '304 8
B. Prosecution History 10
VI. §325(d) AND §314(a) DISCRETION DOES NOT APPLY 10
A. §325(d) 10
B. §314(a) 11
VII. LEVEL OF ORDINARY SKILL IN THE ART 13
VIII. CLAIM CONSTRUCTION 13
A. "light source" limitations ([1], [11]) 14
B. "identify an object" limitation ([12]) 15
C. "beam" limitations ([1]-[3], [11], [14], [19], [20]) 15
D. "modulating"/"modulation" limitations ([19]) 15
IX. GROUNDS OF UNPATENTABILITY 16
A. Collateral Estoppel Applies to Most of the Challenged Claims 16
B. Ground 1: Lisogurski ([1], [3], [11], [19], [20], [25]) 18
1. Lisogurski Overview 18

2. Motivation to Modify Lisogurski 22
3. Claim Limitations 24
C. Ground 2: Lisogurski in view of LeBoeuf ([2], [4]-[6], [14]-[16], [21]-[22], [27]).....49
1. LeBoeuf Overview (Ex.1026).....49
2. Motivation to Combine Lisogurski and LeBoeuf.....51
3. Claim Limitations 54
D. Grounds 3-4: Grounds 1-2 in view of Tran ([1]-[6], [11]-[16], [19]-[22], [25]-[27]) 57
1. Tran Overview 57
2. Motivation to Combine Lisogurski (alone or in view of LeBoeuf) and Tran.....58
3. Claim Limitations 60
E. Grounds 5-8: Grounds 1-4 in view of Carlson ([1]-[6], [11]-[16], [19]-[22], [25]-[27]).....68
1. Carlson Overview 68
2. Motivation to Combine Carlson and Lisogurski (alone or in view of LeBoeuf and/or Tran) 69
3. Claim limitations.....72
F. Grounds 9-10: Grounds 3 and 7 in view of Marbach ([12]-[13], [26]) 74
X. SECONDARY CONSIDERATIONS 77
XI. CONCLUSION.....78

EXHIBIT LIST

Exhibit No.	DESCRIPTION
1001	U.S. Patent No. 10,874,304 ("'304")
1002	File History of U.S. Application No. 16/669,794 ("'304FH")
1003	Declaration of Brian Anthony in Support of Petition for *Inter Partes* Review of U.S. Patent No. 10,874,304 ("Anthony")
1004	Declaration of Brian Anthony in Support of Petition for *Inter Partes* Review of U.S. Patent No. 9,651,533 submitted in IPR2019-00916, Ex. 1003 ("'533-Anthony")
1005	*Apple Inc. v. Omni Medsci, Inc.*, No. IPR2019-00916, Paper 1 (P.T.A.B. Apr. 10, 2019) ("'533-Pet.")
1006	*Apple Inc. v. Omni Medsci, Inc.*, No. IPR2019-00916, Paper 23 (P.T.A.B. Jan. 31, 2020) ("'533-POR")
1007	*Apple Inc. v. Omni Medsci, Inc.*, No. IPR2019-00916, Paper 16 (P.T.A.B. Oct. 18, 2019) ("'533-Inst.")
1008	*Apple Inc. v. Omni Medsci, Inc.*, No. IPR2019-00916, Paper 39 (P.T.A.B. Oct. 14, 2020) ("'533-FWD")
1009	*Omni MedSci, Inc. v. Apple Inc.*, No. 2021-1229, 2022 WL 2062168 (Fed. Cir. June 8, 2022)
1010	Declaration of Brian Anthony in Support of Petition for *Inter Partes* Review of U.S. Patent No. 10,517,484 submitted in IPR2021-00453, Ex. 1003 ("'484-Anthony")
1011	*Apple Inc. v. Omni Medsci, Inc.*, No. IPR2021-00453, Paper 1 (P.T.A.B. Jan. 22, 2021) ("'484-Pet.")
1012	*Apple Inc. v. Omni Medsci, Inc.*, No. IPR2021-00453, Paper 10 (P.T.A.B. Nov. 12, 2021) ("'484-POR")
1013	*Apple Inc. v. Omni Medsci, Inc.*, No. IPR2021-00453, Paper 7 (P.T.A.B. Aug. 6, 2021) ("'484-Inst.")
1014	*Apple Inc. v. Omni Medsci, Inc.*, No. IPR2021-00453, Paper 11 (P.T.A.B. Feb. 4, 2022) ("'484-Pet.-Reply")
1015	*Apple Inc. v. Omni Medsci, Inc.*, No. IPR2021-00453, Paper 22 (P.T.A.B. Aug. 3, 2022) ("'484-FWD")
1016	*Apple Inc. v. Omni Medsci, Inc.*, No. IPR2021-00453, Paper 26 (P.T.A.B. Feb. 14, 2025) ("'484-RFWD")

Exhibit No.	DESCRIPTION
1017	*Apple Inc. v. Omni MedSci, Inc.*, No. 2023-1034, 2024 WL 3084509 (Fed. Cir. June 21, 2024), ECF No. 44
1018	*Omni MedSci, Inc. v. Apple Inc.*, 2:18-cv-00134-RWS, Dkt. No. 211 (E.D. Tex. June 24, 2019) ("CC Order")
1019	*Omni MedSci, Inc. v. Apple Inc.*, 2:18-cv-00429-RWS, Dkt. No. 152 (E.D. Tex. Aug. 14, 2019)
1020	Second Amended Docket Control Order, June 16, 2025. *Omni MedSci, Inc. v. Samsung Electronics Co.*, Ltd. et al., No. 2:24-cv-01070-JRG-RSP (E.D. Tex.)
1021-22	Reserved
1023	Defendants' Supplemental Invalidity and Subject Matter Eligibility Contentions, July 18, 2025. *Omni MedSci, Inc. v. Samsung Electronics Co.*, Ltd. et al., No. 2:24-cv-01070-JRG-RSP (E.D. Tex.).
1024	Reserved
1025	U.S. Patent No. 9,241,676 ("Lisogurski")
1026	U.S. Patent Pub. No. 2010/0217102 ("LeBoeuf")
1027	U.S. Patent No. 8,108,036 ("Tran")
1028	U.S. Patent Pub. No. 2005/0049468 ("Carlson")
1029	U.S. Patent Pub. No. 7,139,076 ("Marbach")
1030	Reserved
1031	U.S. Patent No. 8,050,730 ("Zhang")
1032	U.S. Patent No. 8,821,397 ("Al-Ali")
1033	U.S. Patent Pub. No. 2011/0237911 ("Lamego")
1034	U.S. Patent No. 5,942,749 ("Takeuchi")
1035	U.S. Patent No. 5,822,473 ("Magel")

Exhibit No.	DESCRIPTION
1036	US Patent 5,592,124 ("Mullins")
1037	E.F. Schubert, Light-Emitting Diodes (Cambridge Univ. Press, 2nd ed. reprinted 2014)
1038	Joseph D. Bronzino, "The Biomedical Engineering Handbook," (1995)
1039	U.S. Patent No. 8,079,735 ("Vakil")
1040	Reserved
1041	U.S. Patent Pub. No. 2012/0197093 ("Valencell-093")
1042	U.S. Patent No. 8,862,196 ("Lynn")
1043	U.S. Patent No. 8,412,655 ("Colman")
1044	U.S. Patent No. 5,511,553 ("Segalowitz")
1045	U.S. Patent No. 6,801,799 ("Mendelson")
1046	U.S. Patent No. 6,662,033 ("Casciani")
1047	Reserved
1048	U.S. Pat. No. 9,239,951 ("Hoffberg")
1049	U.S. Pat. Pub. 2007/0194939("Alvarez")
1050	Reserved
1051	U.S. Patent No. 6,931,269 ("Terry")
1052-58	Reserved
1059	U.S. Patent No. 5,497,769 ("Gratton")
1060	U.S. Patent No. 5,827,182 ("Raley")
1061	U.S. Patent No. 7,764,982 ("Dalke")

Exhibit No.	DESCRIPTION
1062	U.S. Patent No. 6,343,223 ("Chin")
1063	W.O. Patent Pub. No. 2000/013003 ("Colvin")
1064	U.S. Patent No. 5,554,273 ("Demmin")
1065	U.S. Patent No. 5,953,713 ("Behbehani")
1066	U.S. Patent No. 6,587,704 ("Fine")
1067	U.S. Patent No. 6,397,092 ("Norris")
1068	U.S. Patent No. 5,360,004 ("Purdy")
1069-76	Reserved
1077	U.S. Patent Publication No. 2006/0184040 ("Keller")
1081	US. Patent No. 9,651,533 ("'533")
1082	U.S. Patent No. 10,517,484 ("'484")
1083	Declaration of Brian Anthony in Support of Petition for Inter Partes Review of U.S. Patent No. 9,861,286 submitted in IPR2019-00914, Ex. 1003
1084	Declaration of Jonathan Bradford in Support of Petition for *Inter Partes* Review of U.S. Patent No. 10,874,304
1085	*Apple Inc. v. Omni Medsci, Inc.*, No. IPR2019-00916, Paper 10 (P.T.A.B. July. 22, 2019) ("'533-POPR")

TABLE OF ABBREVIATIONS

Abbreviation	DESCRIPTION
Claims / Challenged Claims	Claims 1-6, 11-16, 19-22, 26-27 of the ’304
IPR	*Inter Partes* Review
Petitioners	Petitioners Samsung Electronics Co. Ltd., Samsung Electronics America Inc., Fossil Group, Inc., Fossil Stores I, Inc., Fossil Partners, L.P., Oura Health Oy, and OnePlus Technology (Shenzhen) Co., Ltd.
PO	Patent Owner Omni MedSci, Inc.
POSITA	Person of Ordinary Skill in the Art
Board	Patent Trial and Appeal Board
EDTX	Eastern District of Texas
’533-IPR	*Apple Inc. v. Omni Medsci, Inc.*, No. IPR2019-00916 (P.T.A.B.)
’484-IPR	*Apple Inc. v. Omni Medsci, Inc.*, No. IPR2021-00453 (P.T.A.B.)
Texas Case	*Omni MedSci, Inc. v. Samsung Electronics Co., Ltd. et al.*, No. 2:24-cv-01070-JRG-RSP (E.D. Tex.)
Related EDTX Cases	*Omni MedSci, Inc. v. Apple Inc.*, 2:18-cv-00134-RWS (E.D. Tex.) *Omni MedSci, Inc. v. Apple Inc.*, 2:18-cv-00429-RWS (E.D. Tex.)

LIST OF CHALLENGED CLAIMS

[1.pre] A measurement system comprising:

[1.a] a light source comprising a plurality of semiconductor sources that are configured to generate an output optical beam with one or more optical wavelengths, the light source configured to increase signal-to-noise ratio by increasing a light intensity relative to an initial light intensity from at least one of the plurality of semiconductor sources;

[1.b] a measurement device configured to:

[1.c] receive a portion of the output optical beam, and deliver an analysis output beam to a sample;

[1.d] a receiver configured to:

[1.e] receive and process at least a portion of the analysis output beam reflected or transmitted from the sample,

[1.f] generate an output signal representing at least in part a non-invasive measurement on blood contained within the sample,

[1.g] synchronize to the light source,

[1.h] capture light while the semiconductor sources are off and convert the captured light into a first signal,

[1.i] capture light while at least one of the semiconductor sources is on and convert the captured light into a second signal, the captured light including at least

a part of the at least a portion of the analysis output beam reflected or transmitted from the sample, and

[1.j] the measurement system further configured to improve the signal-to-noise ratio by differencing the first signal and the second signal;

[1.k] a smart phone or tablet comprising a wireless receiver, a wireless transmitter, a display, a microphone, a speaker, one or more buttons or knobs, a microprocessor and a touch screen, the smart phone or tablet configured to: receive and process at least a portion of the output signal, store and display the processed output signal, and transmit at least a portion of the processed output signal over a wireless transmission link; and

[1.l] a cloud configured to:

[1.m] receive, over the wireless transmission link, an output status comprising the at least a portion of the processed output signal,

[1.n] process the received output status to generate processed data, and store the processed data.

[2] The measurement system of claim 1, wherein the plurality of semiconductor sources comprises at least one of: light emitting diodes (LEDs), laser diodes (LD's), tunable LD's, and super-luminescent laser diodes (SLDs), and wherein the measurement system further comprises a reflective surface to receive and redirect at least some of the at least a portion of the analysis output beam

reflected or transmitted from the sample.

[3] The measurement system of claim 1, wherein the light source is further configured to increase the light intensity from the plurality of semiconductor sources by spatially coupling the optical output beam from at least two of the plurality of semiconductor sources.

[4] The measurement system of claim 1, wherein the receiver comprises a plurality of detectors arranged along a first arc, and wherein the plurality of semiconductor sources are arranged along a second arc.

[5] The measurement system of claim 4, wherein the first arc is offset from the second arc.

[6] The measurement system of claim 4, wherein the first arc and the second arc are concentric.

[11.pre] A measurement system comprising:

[11.a] a wearable measurement device for measuring one or more physiological parameters, including a light source comprising a plurality of semiconductor sources that are configured to generate an output optical beam with one or more optical wavelengths;

[11.b] the light source configured to increase signal-to-noise ratio by increasing a light intensity relative to an initial light intensity from at least one of the

plurality of semiconductor sources;

[11.c] the wearable measurement device configured to receive a portion of the output optical beam and to deliver an analysis output beam to a sample;

[11.d] the wearable measurement device further comprising a receiver configured to:

[11.e] receive and process at least a portion of the analysis output beam reflected or transmitted from the sample,

[11.f] generate an output signal representing at least in part a non-invasive measurement on blood contained within the sample,

[11.g] synchronize to the light source,

[11.h] capture light while the semiconductor sources are off and convert the captured light into a first signal,

[11.i] capture light while at least one of the semiconductor sources is on and convert the captured light into a second signal, the captured light including at least a part of the at least a portion of the analysis output beam reflected or transmitted from the sample,

[11.j] wherein the measurement system is further configured to improve the signal-to-noise ratio by differencing the first signal and the second signal;

[11.k] a smart phone or tablet comprising a wireless receiver, a wireless transmitter, a display, a microphone, a speaker, one or more buttons or knobs, a

microprocessor and a touch screen, the smart phone or tablet configured to receive and process at least a portion of the output signal, to store and display the processed output signal, and to transmit a portion of the processed output signal over a wireless transmission link; and

[11.l] a cloud configured to receive over the wireless transmission link an output status comprising the at least a portion of the processed output signal, to process the received output status to generate processed data and to store the processed data, and wherein the cloud is capable of storing a history of at least a portion of the received output status over a specified period of time.

[12.pre] The measurement system of claim 11, wherein the measurement system is configured to use artificial intelligence in making decisions;

[12.a] wherein the measurement system is configured to perform pattern identification or classification, and wherein the measurement system is configured to apply a threshold function to a comparison with a stored data set; and

[12.b] wherein the measurement system is at least in part configured for selection or identification of an object, and wherein the measurement system is configured to improve a signal-to-noise ratio of the selection or identification by applying regression signal processing methodologies or multivariate techniques.

[13] The measurement system of claim 12, wherein the light source is

configured to further increase the signal-to-noise ratio by increasing a pulse rate of at least one of the plurality of semiconductor sources from an initial non-zero pulse rate.

[14] The measurement system of claim 11, wherein the plurality of semiconductor sources comprises at least one of: light emitting diodes (LEDs), laser diodes (LD's), tunable LD's, and super-luminescent laser diodes (SLDs), and the measurement system further comprising a reflective surface to receive and redirect at least some of the at least a portion of the analysis output beam reflected or transmitted from the sample.

[15] The measurement system of claim 11, wherein the receiver comprises a plurality of detectors arranged along a first arc, and wherein the plurality of semiconductor sources are arranged along a second arc that is offset from the first arc.

[16] The measurement system of claim 15, wherein the first arc and the second arc are concentric.

[19.pre] A wearable device for use with a smart phone or tablet, the wearable device comprising:

[19.a] a measurement device including a light source comprising a plurality of semiconductor sources for measuring one or more physiological parameters,

[19.b] the measurement device configured to: generate, by modulating at least one of the semiconductor sources having an initial light intensity, an input optical beam having one or more optical wavelengths, and

[19.c] receive and to deliver a portion of the input optical beam to tissue, wherein the tissue reflects at least a portion of the input optical beam delivered to the tissue;

[19.d] the measurement device further comprising a receiver configured to: capture light while the semiconductor sources are off and convert the captured light into a first signal, and capture light while at least one of the semiconductor sources is on and convert the captured light into a second signal, the captured light including at least a portion of the input optical beam reflected from the tissue;

[19.e] synchronize to the modulation of the at least one of the semiconductor sources;

[19.f] the measurement device further configured to improve a signal-to-noise ratio of the input optical beam reflected from the tissue by: differencing the first signal and the second signal, and

[19.g] increasing the light intensity relative to the initial light intensity from at least one of the semiconductor sources;

[19.h] the measurement device further configured to generate an output signal representing at least in part a non-invasive measurement on blood contained within

the tissue;

[19.i] the wearable device configured to communicate with the smart phone or tablet, the smart phone or tablet comprising a wireless receiver, a wireless transmitter, a display, a voice input module, a speaker, and a touch screen; and

[19.j] the smart phone or tablet configured to: receive and to process at least a portion of the output signal, store and display the processed output signal, and transmit at least a portion of the processed output signal over a wireless transmission link.

[20] The wearable device of claim 19, wherein the light source is configured to further improve the signal-to-noise ratio of the input optical beam reflected from the tissue by increasing a pulse rate of at least one of the plurality of semiconductor sources from an initial non-zero pulse rate.

[21] The wearable device of claim 20, wherein the receiver comprises a plurality of detectors arranged along a first arc, and wherein the plurality of semiconductor sources are arranged along a second arc that is offset from the first arc.

[22] The wearable device of claim 21, wherein the first arc and the second arc are concentric.

[26.pre] The wearable device of claim 19, wherein the wearable device is

configured to use artificial intelligence in making decisions;

[26.a] wherein the wearable device is configured to perform pattern identification or classification, and wherein the wearable device is configured to apply a threshold function to a comparison with a stored data set; and

[26.b] wherein the wearable device is at least in part configured for selection or identification of an object, and wherein the wearable device is configured to improve a signal-to-noise ratio of the selection or identification by applying regression signal processing methodologies or multivariate techniques

[27] The wearable device of claim 19, wherein the measurement device further comprises a reflective surface configured to receive and redirect at least a portion of light reflected from the tissue.

Pursuant to §§311-319 and §42.1,[1] Samsung Electronics Co. Ltd., Samsung Electronics America Inc., Fossil Group, Inc., Fossil Stores I, Inc., Fossil Partners, L.P., Oura Health Oy, and OnePlus Technology (Shenzhen) Co., Ltd. ("Petitioners") respectfully petition for *inter partes* review of claims 1-6, 11-16, 19-22, 26-27 ("Claims" or "Challenged Claims") of U.S. Patent No. 10,874,304 (Ex.1001, "'304"). There is a reasonable likelihood—and it is highly likely—that at least one challenged claim is unpatentable as explained herein. Petitioners request review of the Claims and judgment finding them unpatentable under §103.

I. INTRODUCTION

The Claims are identical and/or substantially similar to those found unpatentable by the Patent Trial and Appeal Board ("Board") in prior IPRs involving related U.S. Patent Nos. 9,651,533 ("'533") and 10,517,484 ("'484"): IPR2019-00916 ('533-IPR) and IPR2021-00453 ('484-IPR). *See* §IX. Anthony, ¶¶9-12, 43-44, 71-407. Collateral estoppel thus precludes Patent Owner Omni ("PO") MedSci, Inc. ("Omni") from relitigating the unpatentability of those identical/"substantially

[1] Section cites are to 35 U.S.C. (pre-AIA) or 37 C.F.R. as context indicates. All emphases/annotations added unless otherwise noted. Figure annotations herein generally quote the Claims for reference. Citations herein are exemplary and not limiting.

similar" limitations in the '304.

Like the challenged claims in the '533- and '484-IPRs, the '304 is generally directed to a physiological measurement system comprising a wearable **measurement device** with light sources and detectors to generate an output signal with physiological parameters to be transmitted to a **smart phone/tablet**, and common techniques to improve signal-to-noise ratios of such signals. '304, 20:5-25, 33:45-57, 30:27-45, 35:31-33, Fig. 13 (annotated below). Anthony, ¶¶40-43.

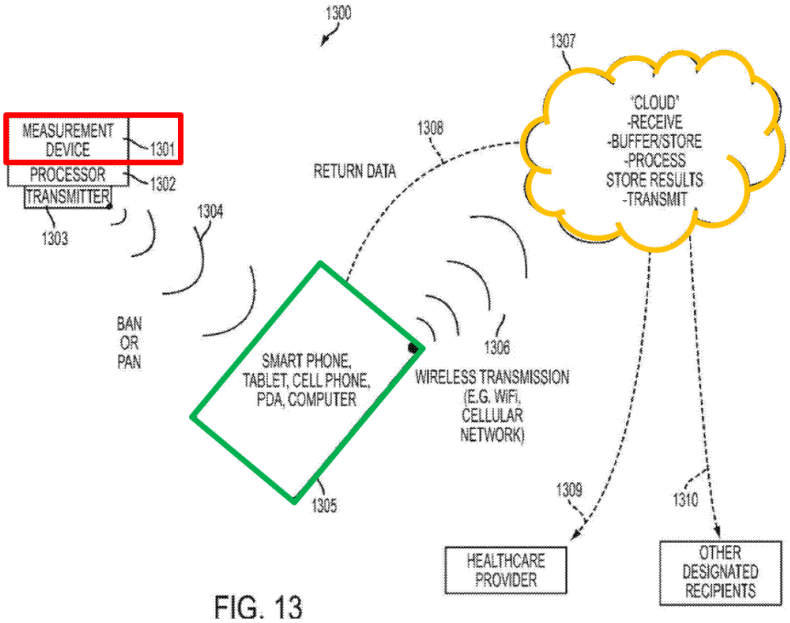

FIG. 13

Additional limitations in the '304 Claims not previously addressed in the '533- and '484-IPRs at most recite common ways to increase light intensity, common configurations and characteristics for light sources and detectors, generic methods of generating optical beams by modulating semiconductor sources, a

generic reflective surface to improve detection, and common analytical methods to improve measurement of physiological parameters. As further discussed below, all such limitations were well known in the art. *See generally* §§IX.B-IX.F. Anthony, ¶44.

Accordingly, Petitioners request that the Board institute trial and find the Claims unpatentable.

II. MANDATORY NOTICES UNDER 37 C.F.R. §42.8

A. Real Party-in-Interest

Petitioners Samsung Electronics Co. Ltd., Samsung Electronics America, Inc., Fossil Group, Inc., Fossil Stores I, Inc., Fossil Partners, L.P., Oura Health Oy, and OnePlus Technology (Shenzhen) Co., Ltd., in addition to Ouraring, Inc. and Guangdong OPPO Mobile Telecommunications Corp., Ltd., are the real parties-in-interest. No other party had access to or control over the present Petition, and no other party funded or participated in preparation of the present Petition.

B. Related Matters

The ’304 is the subject of the following co-pending cases:

- *Omni Medsci, Inc. v. Samsung Electronics. Co., Ltd. et al.*, 2:24-cv-01070-JRG-RSP (E.D. Tex) (“Texas Case”);
- *Omni MedSci, Inc. v. Whoop, Inc.*, 1:25-cv-00140-JLH (D. Del.); and

The ’484, which is related to the ’304 and shares the same specification, is also subject to the following appeal: *Omni Medsci, Inc. v. Apple, Inc.*, No. 25-1646 (Fed. Cir.).

Petitioners are also concurrently filing petitions for IPR of the related U.S. Patent Nos. 9,651,533 (IPR2025-01250), 11,160,455 (IPR2025-01252), 12,193,790 (IPR2025-01253), 12,268,475 (IPR2025-01254), and petitions for Post Grant Review (PGR) of the related U.S. Patent Nos. 12,268,475 (PGR2025-00063) and 12,193,790 (PGR2025-00064). Petitioners are further concurrently filing a petition for IPR of U.S. Patent 9,055,868 (IPR2025-01249) asserted in the Texas Case.

C. Lead and Back-Up Counsel

Lead Counsel	Backup Counsel
James L. Davis, Jr. Reg. No. 57,325 **ROPES & GRAY LLP** 525 University Avenue, 8th Floor Palo Alto, CA 94301 Phone: +1-650-617-4000 Fax: +1-617-235-9492 james.l.davis@ropesgray.com Samsung-Omni-Ropes-IPR-Service@ropesgray.com **Mailing address for all PTAB correspondence:** ROPES & GRAY LLP IPRM—Floor 43 Prudential Tower 800 Boylston Street Boston, Massachusetts 02199-3600	Hyun-Joong Kim Reg. No. 79,936 **ROPES & GRAY LLP** 1211 Avenue of the Americas New York, NY 10036 Phone: +1 212-596-9000 Fax: +1-617-235-9492 Daniel.Kim@ropesgray.com Fan (Frances) Zhang Reg. No. 73,589 **ROPES & GRAY LLP** 2099 Pennsylvania Avenue, N.W. Washington, DC 20006-6807 Phone: +1-202-508-4600 Fax: +1-617-235-9492 frances.zhang@ropesgray.com
	Jasjit S. Vidwan Reg. No. 72,080 **MAYER BROWN LLP** 1999 K Street, NW Washington, DC 20006-1101 Tel.: 202.263.3065 JVidwan@mayerbrown.com Robert G. Pluta Reg. No. 50,970 **MAYER BROWN LLP** 71 S. Wacker Drive Chicago, IL 60606 Tel.: 312.701.8641 RPluta@mayerbrown.com

Lead Counsel	Backup Counsel
	Jared A. Smith Reg. No. 73,749 **FISH & RICHARDSON P.C.** 12860 El Camino Real, Suite 400 San Diego, CA 92130 Phone: +1 858-678-4702 Fax: +1 858-678-5099 jasmith@fr.com Ricardo J. Bonilla Reg. No. 65,190 **FISH & RICHARDSON P.C.** 1717 Main Street, Suite 5000 Dallas, TX 75201 Phone: +1 214-760-6150 Fax: +1 214-747-2091 rbonilla@fr.com
	Jack Shaw Reg. No. 72,262 **CHERRY JOHNSON SIEGMUND JAMES PC** 8140 Walnut Hill Lane, Suite 105 Dallas, Texas 75231 Tel: 254-732-2242 Fax: 866-627-3509 jshaw@cjsjlaw.com

Petitioners consent to electronic service of documents to the email addresses identified above.

III. PAYMENT OF FEES

The undersigned authorizes the Office to charge the fee required by §42.15(a) and any additional fees that might be due to Deposit Account No. 18-1945, under Order No. 110797-0060-654.

IV. REQUIREMENTS FOR *INTER PARTES* REVIEW

A. Grounds for Standing

Pursuant to §42.104(a), Petitioners certify the '304 is available for IPR. Petitioners and any real parties-in-interest are not barred or estopped from requesting IPR challenging the Claims on the grounds identified herein.

B. Identification of Challenge

Pursuant to §§42.104(b) and (b)(1), Petitioners request IPR of the Claims and that the Board cancel the same as unpatentable.

1. The Specific Art on Which the Challenge Is Based

Petitioners rely upon the following art (Anthony, ¶¶68-70):

Name	Ex.	Publication	Filed	Published/ Issued	Prior art under at least
Lisogurski	1025	US 9,241,676	5/31/2012	1/26/2016	§102(e)
LeBoeuf	1026	US 2010/0217102	1/21/2010	8/26/2010	§102(b)
Tran	1027	US 8,108,036	6/18/2009	1/31/2012	§102(e)
Carlson	1028	US 2005/0049468	9/3/2003	3/3/2005	§102(b)
Marbach	1029	US 7,139,076	8/8/2003	11/21/2006	§102(b)

Each of the above references is prior art to the Claims based on 12/31/2012,

the earliest provisional application priority date listed in the '304's priority claim.[2]

2. Statutory Grounds on Which the Challenge Is Based

Ground	Claim(s)	Basis	References
1	1, 3, 11, 19, 20	§103	**Lisogurski**
2	2, 4-6, 14-16, 21-22, 27		**Lisogurski** in view of **LeBoeuf**
3	1, 3, 11-13, 19, 20, 26		**Lisogurski** in view of **Tran**
4	2, 4-6, 12-16, 21-22, 26-27		**Lisogurski** in view of **LeBoeuf** and **Tran**
5-8	See claims for Grounds 1-4, respectively		**Grounds 1-4** in view of **Carlson**
9	1, 3, 11-13, 19, 20, 26		**Lisogurski** in view of **Tran** and **Marbach**
10			**Lisogurski** in view of **Tran, Carlson** and **Marbach**

V. '304 AND PROSECUTION HISTORY

A. '304

'304 is a continuation of the '533 and '484 at issue in '533- and '484-IPRs. '304 Figure 13 shows an embodiment of the physiological measurement system:

[2] Petitioners take no position as to the appropriate priority date of the '304. Anthony, ¶¶4-8, 49-52.

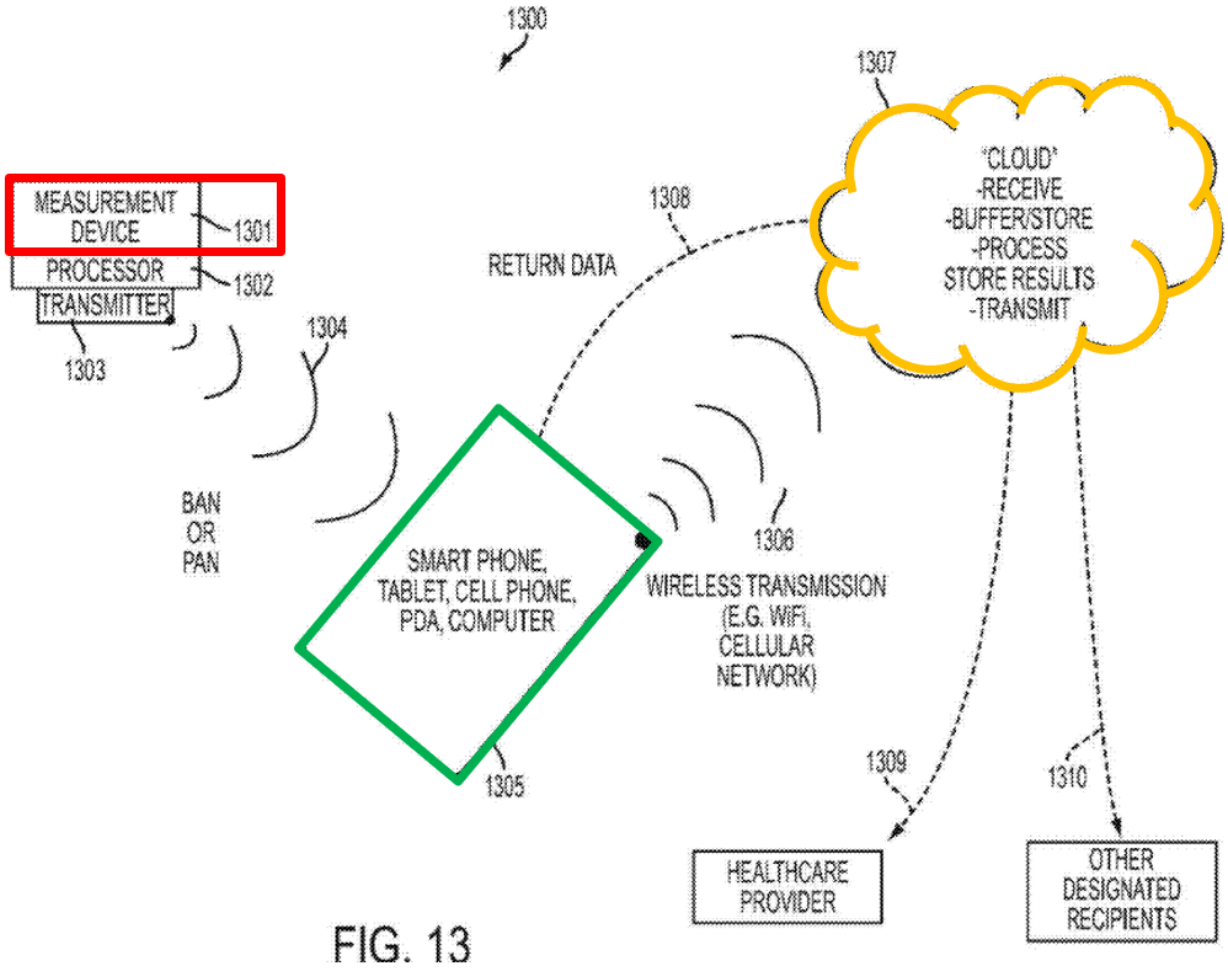

FIG. 13

33:45-35:16, Fig. 13 (annotated). Wearable **measurement device 1301** with processor 1302 and transmitter 1303 communicates measurements to **smart phone/tablet 1305**. 33:45-34:7. The **smart phone/tablet 1305** processes the measurement, and communicates it to **cloud based server 2407** for additional processing, e.g., pattern matching algorithms, regression, and multivariate techniques. 34:7-28, 35:17-23, 35:30-39. Anthony, ¶45.

Wearable device 1301 is placed on a user's body and includes semiconductor

sources that generate an output optical light with optical wavelengths. 5:4-18. **Wearable device 1301** further comprises lenses that receive and direct light from the semiconductor sources to the user's tissue, and a detection system that receives the light reflected from the tissue and to generate an output signal having a signal-to-noise ratio. 5:13-30. The '304 describes common techniques to improve signal processing to select the constituents of interest, including using increased light intensity, modulation, increased pulse rate, and dark subtraction techniques. 5:23-30, 6:3-8, 24:45-52. Anthony, ¶46.

B. Prosecution History

No prior art rejections were issued during prosecution, and the claims were allowed after Applicant agreed to incorporate the Examiner's proposed amendments: "increasing a light intensity relative to an initial light intensity" and "generate an output signal representing at least in part a non-invasive measurement on blood contained within the sample." Ex.1002, 266, 273, 275-76, 287 (amendment underlined). As discussed below, and as the Board's '533-FWD and '484-FWD support, **Lisogurski** discloses these limitations. §IX.B.3. Anthony, ¶¶47-48.

VI. §325(D) AND §314(A) DISCRETION DOES NOT APPLY

A. §325(d)

Under the *Advanced Bionics* framework, there is no basis for discretionary denial under §325(d) as **the grounds raised by this Petition are not the same or**

substantially the same as the art and arguments raised during prosecution of the '304. Although **Lisogurski**, **LeBoeuf**, and **Carlson** were cited in IDSs, there were no rejections issued based on these references during prosecution ('304FH, 153, 168, 171, 370, 373, 400), and while the '533-Pet., '533-Anthony, and '533-FWD were cited in IDSs ('304FH, 192, 211, 354, 426), **Lisogurski**, **LeBoeuf**, or **Carlson** were never considered in combination or used as the basis for a rejection, nor were any of the aforementioned '533-IPR materials relied on as a basis for a rejection.

The Examiner also erred in a manner material to the patentability of the Claims. **Lisogurski** discloses the claim limitations that were added during prosecution to secure allowance (§V.B). Moreover, claims identical/substantially similar to the Challenged Claims were already found unpatentable in the '533-/'484-IPRs based on the same grounds applied herein (§§IX.B-IX.E). It was material error for the Examiner to fail to apply the same grounds during prosecution. Anthony, ¶¶47-48.

B. §314(a)

The Board should not exercise its discretion to deny institution under §314(a).

***Factor* 1:** Petitioners intend to seek a stay of the Texas Case pending the outcome of this and other related IPRs challenging patents asserted in the Texas Case. Given that it is highly unlikely that the Court will have conducted a *Markman*

hearing at institution time, a stay is likely to be granted. Ex.1020, 4.

***Factor 4*:** Petitioners stipulate that, if the PTAB institutes this IPR, Petitioners will not pursue in the Texas Case (1) the specific grounds asserted in this IPR or any ground that was raised or could have been raised in an IPR against the Challenged Claims; or (2) combinations of the prior art asserted in this IPR with any other type of prior art against the Challenged Claims.

***Factor 6*:** The Board is uniquely positioned to address the issue of collateral estoppel based on the '533-/'484-IPRs. *ParkerVision, Inc. v. Qualcomm Inc.*, 116 F.4th 1345, 1362 (Fed. Cir. 2024); *Samsung Elecs. Co., Ltd. v. Netlist, Inc.*, IPR2025-00002, Paper 17 at 17-24 (PTAB May 15, 2025); *see also* §IX.A.

Further, this Petition is strong, presenting compelling unpatentability arguments overlooked during prosecution. Indeed, in the prior the '533-/'484-IPRs, the Board already rejected identical/substantially similar claims to the '304 Claims here based on the same prior art combinations applied herein (§§IX.B-IX.F). *See Posco Co., Ltd. v. Arcelormittal,* IPR2025-00370, Paper 10 at 3 (P.T.A.B. June 25, 2025) (The Board's prior unpatentability decision on related patents "tips the balance against discretionary denial."); *Tesla, Inc., v. Intellectual Ventures II LLC*, IPR2025-00217, Paper 9 at 2 (P.T.A.B. June 13, 2025).

PO has not developed settled expectations—the '304 issued in 2020 and was not asserted prior to the Texas Case. *Berkshire Hathaway Energy Co. et al. v. MES,*

Inc., IPR2025-00274, Pap. 23, *3 (PTAB July 2, 2025); *Intel Corp. v. Proxense LLC*, IPR2025-00327, Pap. 12, *2-3 (PTAB June 26, 2025).

Factors 2-3 and 5 are neutral or at most weigh slightly against institution because of Petitioners' diligence and reduction of issues for the public.

Accordingly, the Board should not exercise its discretion to deny institution.

VII. LEVEL OF ORDINARY SKILL IN THE ART

On or before the claimed priority date of 12/31/2012, a person of ordinary skill in the art ("POSITA") "would have [had] a good working knowledge of optical sensing techniques and their applications, and familiarity with optical design and signal processing techniques," and would have obtained such knowledge through "an undergraduate education in engineering (electrical, mechanical, biomedical, or optical) or a related field of study, along with relevant experience studying or developing physiological monitoring devices…in industry or academia." '533-FWD, 8-9; '484-FWD, 11 n.7. Anthony, ¶¶49-52.

VIII. CLAIM CONSTRUCTION

Claim terms subject to IPR are to be construed according to the *Phillips* standard applied in district court. §42.100(b). Only terms necessary to resolve the controversy must be construed. Because the prior art asserted herein discloses embodiments within the Claims' indisputable scope, the Board need not construe the

Claims' outer bounds.[3] Other than noted here, all claim terms should be construed according to their plain and ordinary meaning as they would have been understood by a POSITA. Anthony, ¶53.

In prior Board or district court proceedings involving patents related to the '304, certain terms identical to or substantially similar to language in the Claims were construed, as detailed below. Though Petitioners do not believe that those terms need to be construed, the prior art discloses and renders obvious those terms, including under those prior constructions, as discussed in §IX. Anthony, ¶¶54-65.

A. "light source" limitations ([1], [11])

The Board previously construed "a light source comprising a plurality of semiconductor sources that are light emitting diodes…***configured to*** increase signal-to-noise ratio by…increasing a pulse rate of at least one of the plurality of semiconductor sources" to mean "a light source containing two or more light emitting diodes (semiconductor sources), wherein at least one of the light emitting

[3] In the Texas Case, Defendants identified certain limitations as indefinite. Ex.1023, 236-38. Regardless of the outer bounds of these limitations, the prior art discloses and/or renders obvious the indisputable scope of these limitations. *See* §IX. Anthony, ¶¶66-67, 118-120, 141-142, 181, 200, 235, 242, 258-59, 281, 285, 289, 298, 304, 309, 313, 342-43, 359-360, 364, 400-401.

diodes is ***capable of*** having its pulse rate increased to increase a signal-to-noise ratio." '533-FWD, 10-12. Anthony, ¶54.

B. "identify an object" limitation ([12])

The Board previously construed "to identify an object" to mean "to recognize or establish an object as being a particular thing," which the Federal Circuit affirmed on appeal. '484-FWD, 8-10; '484-Remand-FWD, 3; Ex.1017, 7-10. Anthony, ¶55.

C. "beam" limitations ([1]-[3], [11], [14], [19], [20])

In two Eastern District of Texas cases involving related patents that share substantially the same specification as the '304 ("Related EDTX Cases"), "beam" was construed as "photons or light transmitted to a particular location in space." Ex.1018, 7-9; Ex.1019, 10-12. Though PO subsequently raised this construction in in the '533-IPR, the Board concluded that no construction of "beam" was necessary. '533-POPR, 10-11; '533-Inst., 9; '533-FWD, 9-10. Anthony, ¶¶56-58, 63-64.

D. "modulating"/"modulation" limitations ([19])

In the Related EDTX Cases, the district court also construed the term "modulating at least one of the LEDs" to mean "varying the amplitude, frequency, or phase of the light produced by at least one of the LEDs to include information." Ex.1018, 13-16; Ex.1019, 15-19. The Board also adopted this construction for the same term in a related patent. *Apple Inc. v. Omni Medsci, Inc.*, IPR2019-00914, Paper 13 at 9-11 (Nov. 6, 2019). Anthony, ¶65.

IX. GROUNDS OF UNPATENTABILITY

As explained below, the Claims are unpatentable as obvious. This Petition is supported by the Declaration of Brian Anthony, which describes the prior art's scope and content at the time of the '304. Anthony, ¶¶1-415.

A. Collateral Estoppel Applies to Most of the Challenged Claims

The vast majority of the Challenged Claims were already found unpatentable in the prior '533/'484-FWDs '533-FWD; '484-FWD (FWD issued prior to appeal); '484-RFWD (FWD issued on remand).[4]

It is thus an efficient use of Board resources to address similar claims in the related '304. As discussed in §IX, PO is collaterally estopped from relitigating the unpatentability determinations of at least the following '304 limitations: [1.pre]-[1.e], [1.g]-[1.h], [1.j]-[1.n], [11.pre]-[11.e], [11.g]-[11.h], [11.j]-[11.l], [19.pre]-[19.a], [19.c], [19.e], [19.g], [19.i]-[19.j], [12.pre-12.a], and [26.pre]-[26.a], and at least partially to [1.f], [1.i], [11.f], [11.i], [12.b], [19.b], [19.d], [19.f], [19.h], [20], [26.b], and [13].

First, these limitations are "identical" or "substantially similar" to limitations

[4] *See also Apple Inc. v. Omni Medsci, Inc.*, IPR2020-00175, Paper 26 (June 14, 2021); *Omni MedSci, Inc. v. Apple Inc.*, No. 2021-2213, 2022 WL 2062167 (Fed. Cir. June 8, 2022).

already found unpatentable by the Board in the prior '533-/'484-IPRs against PO. *See* '533-FWD, 25-47; '484-FWD, 12-55.[5] *Google LLC v. Hammond Dev. Int'l*, 54 F.4th 1377, 1381-82 (Fed. Cir. 2022); *Samsung Elecs. Co., Ltd. v. Netlist, Inc.*, IPR2025-00002, Paper 17 at 17-24 (PTAB May 15, 2025) ("Patent Owner is collaterally estopped" based on FWDs relying on the same ground to find "substantially similar" limitations in related patents obvious). To the extent there are any differences between the aforementioned limitations and prior limitations at issue in the '533-/'484-IPRs, they are immaterial. Anthony, ¶¶71-407.

Second, these limitations were "actually litigated" in the '533-/'484-IPRs. *Google*, 54 F.4th at 1381-82; '533-FWD, 25-47; '533-Pet, 21-63; '533-POR, 13-32; '484-FWD, 12-55; '484-Pet, 21-66; '484-POR, 14-42.

***Third*,** the Board's findings with respect to these limitations were "essential" to the FWDs, which were final judgments because they were affirmed by the Federal Circuit or not appealed. *United Therapeutics Corp. v. Liquidia Techs., Inc.*, 74 F.4th 1360, 1372 (Fed. Cir. 2023).

Fourth, PO here (Omni) was the same PO who defended against the prior

[5] To meet these identical/substantially similar limitations, the Board relied on the same embodiments of **Lisogurski, Tran,** and **Carlson** in the '533-FWD and '484-FWD, as does this Petition. *See* §§IX.B-IX.E. Anthony, ¶¶10-11.

'533- and '484-IPRs and thus had a full and fair opportunity to litigate the patentability of these limitations in the prior IPRs. *Google*, 54 F.4th at 1381-82.

To the extent PO is not collaterally estopped, the Board's findings (*see* §IX) regarding the unpatentability of the immaterially different limitations in the '533-/'484-IPRs apply equally here. Anthony, ¶¶71-407.

B. Ground 1: Lisogurski ([1], [3], [11], [19], [20], [25])

1. Lisogurski Overview

Lisogurski discloses a "physiological monitoring system" that "monitor[s] one or more physiological parameters of a patient … using one or more physiological sensors," which include a "pulse oximeter [that] non-invasively measure[s] the oxygen saturation of a patient's blood." 3:44-46, 3:62-64. The pulse oximeter includes "a light sensor that is placed at a site on a patient" (e.g., "fingertip," "earlobe"). 4:6-7. The light sensor emits "one or more wavelengths [of light]" "that are attenuated by the blood in an amount representative of the blood constituent concentration." 4:42-48. Anthony, ¶74.

Figure 1's "physiological monitoring system 100" includes "sensor 102 and monitor 104 for generating and processing physiological signals of a subject." 10:42-46. Sensor 102 includes "light source 130 and detector 140." 10:48-49, Fig. 1.

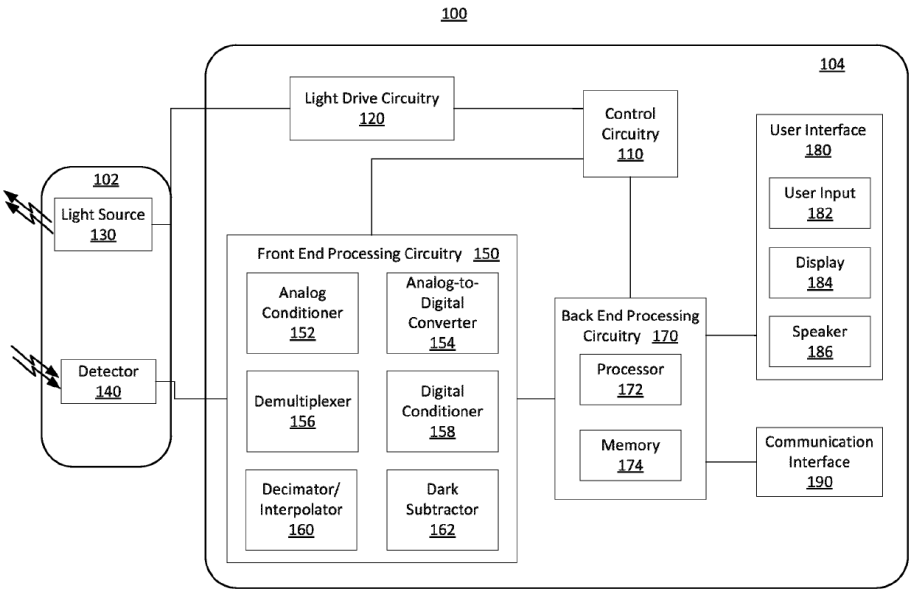

FIG. 1

"[L]ight source 130" includes "Red" and "IR" light emitting diodes (LEDs). 10:52-58. "[D]etector 140…detect[s] the intensity of light at the Red and IR wavelengths," converts them to an electrical signal, and "send[s] the detection signal to monitor 104," where it is processed to determine physiological parameters. 11:9-10, 11:20-23. Anthony, ¶¶75-76.

"[M]onitor 104" includes "user interface 180," "communication interface 190," and "control circuitry 110" for controlling "light drive circuitry 120," "front end processing circuitry 150," and "back end processing circuitry 170." 11:28-38, Fig. 1. "[L]ight drive circuitry 120" "generate[s] a light drive signal," which "control[s] the intensity of light source 130 and the timing of when the light source 130 is turned on and off." 11:38-40, 11:50-54. Front end processing circuitry 150 "receive[s] a detection signal from detector 140 and provide[s] one or more

processed signals to back end processing circuitry 170." 12:42-45. Front end processing circuitry 150 "synchronize[s] the operation of an analog-to-digital converter and a demultiplexer with the light drive signal based on the timing control signals." 11:43-46. Anthony, ¶¶77-79.

"Backend processing circuitry 170" "receive[s] and process[es] physiological signals received from front end processing circuitry 150" to "determine one or more physiological parameters." 14:56-57, 14:60-64. Backend processing circuitry 170 is coupled to "user interface 190" and "communication interface 190, " which includes transmitters and receivers that allow "monitor 104 to exchange information with external devices" wirelessly. 15:16-22, 15:43-44, 15:48-57. Anthony, ¶¶80-83.

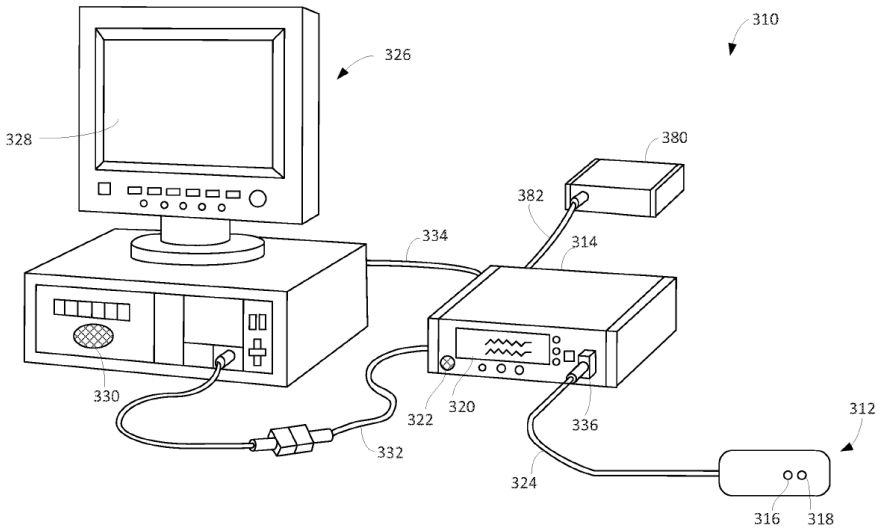

FIG. 3

Figure 3's "physiological monitoring system 310" includes components of Figure

1.[6] 17:30-35, 18:13-14. For example, system 310 includes sensor 312 (like sensor 102), monitor 314 (like monitor 104), and multi-parameter physiological monitor ("MPPM") 326. 17:35-62, 18:3-10, 18:44-45, 19:25-27. Anthony, ¶¶84-86.

Monitor 314 "communicate[s] wirelessly" with MPPM 326. 18:58-62. Monitor 314 "calculate[s] physiological parameters based at least in part on data relating to light emission…received from…sensor unit 312" and displays them on "display 320." 17:59-62, 18:3-10. Anthony, ¶87. MPPM 326 may "calculate physiological parameters and…provide a display 328 for information from monitor 314." 18:49-52. Monitor 314 and MPPM 326 are "coupled to a network to enable the sharing of information with servers or other workstations." 18:62-65, 20:53-58. The servers may also "publish the data to a server or website," or "make the parameters available to a user." 20:58-60. Anthony, ¶¶87-88. **Lisogurski** further discloses methods for improving signal-to-noise ratio including: modulating the light drive signal to have a "period the same as or closely related to the period of [a] cardiac cycle," using a dark subtraction process to remove noise from the ambient light, and varying light drive signal including drive current or light brightness, duty

[6] A POSITA would have understood that Figure 3 is an exemplary application of the embodiment shown in Figure 1, and that the disclosures in Figure 3 apply to the corresponding components or features in Figure 1. Anthony, ¶¶85-86.

cycle, firing rate, and other suitable parameters. 6:7-19, 9:46-60, 13:60-14:10, 16:33-54, 25:49-55; *see also* '533-FWD, 12-17; '484-FWD, 13-20. Anthony, ¶89.

2. Motivation to Modify Lisogurski

As the Board found in the '533-/'484-IPRs, a POSITA would have been motivated to modify **Lisogurski's** physiological monitoring system 100 to "relocat[e] **control circuitry 110, light drive circuitry 120**, and **front end processing circuitry 150** of monitor 104 to sensor 102." '533-FWD, 22-25 (including annotated Fig. 1); '484-FWD, 24-25. Anthony, ¶90.

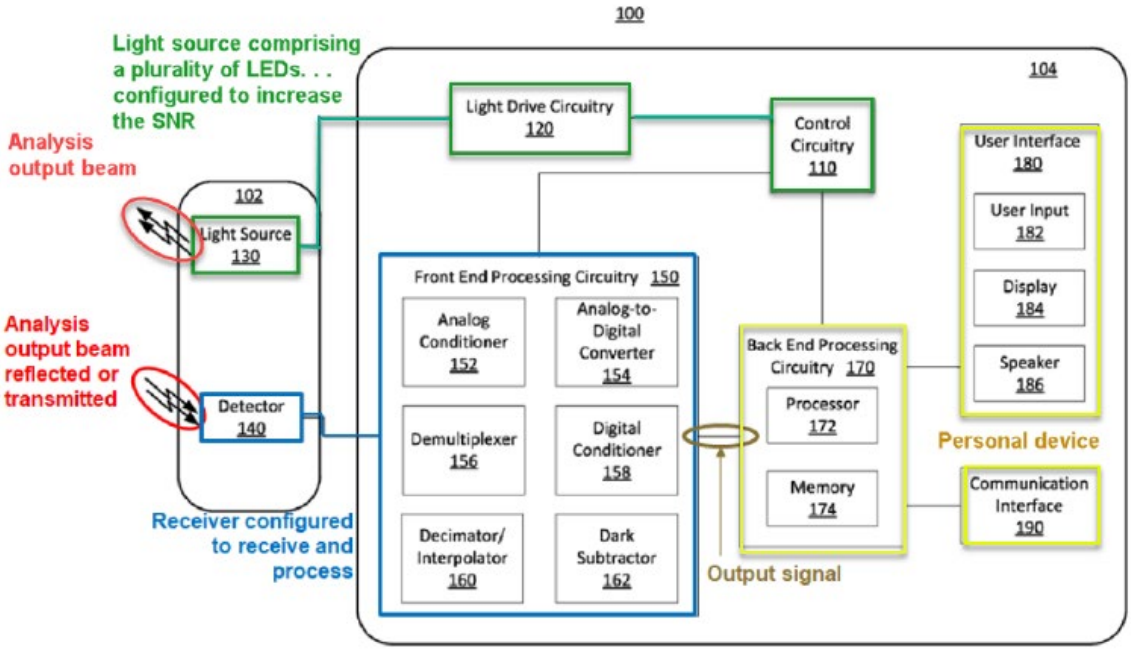

FIG. 1

"Lisogurski expressly suggests the modification by teaching embodiments in which 'the functionality of some of the components may be combined in a single component' and embodiments in which 'the functionality of some of the components

of monitor 104…may be divided over multiple components.'" '533-FWD, 23 (quoting Lisogurski, 16:2-4, 16:7-9); '484-FWD, 24-25. Because the control circuitry 110 and light drive circuitry 120 work together to output the electric current applied to the light source, a POSITA would have understood or at least found it obvious to include them in the same device as the light source. '533-FWD, 23 (citing '533-Pet., 32-34). And, because the front end processing circuitry 150 performs analog-to-digital conversion and other initial processing of the signal, the Board also agreed that a POSITA would have understood or at least found it obvious to include it in the sensor where the signal is captured. '533-FWD, 23 (citing '533-Pet., 47-48). Indeed, it was common for light sources to include light drive circuitry and control circuitry, and for a detector to include a front end processing circuitry.[7] "[N]umerous industry trends motivate the modification," which "include improving the capability of wearable sensors for use in sports and personal fitness applications and wirelessly connecting wearable sensors to networks to remotely monitor patient health." '533-FWD, 23. Anthony, ¶¶90-107.

[7] Zhang, 14:12-26, Fig. 18; Lamego, [0052], Fig. 4; Takeuchi, Abstract, 2:66-4:20, Figs. 7-9; Magel, 2:21-23, 3:37-52, Fig. 2, Mullins, 11:7-33; Anthony, ¶¶105-106.

3. Claim Limitations

a. [1.pre]: "A measurement system comprising:"

Lisogurski meets [1.pre]. Anthony, ¶¶109-110.

To meet the same limitation ('533 claims 5/13), the Board relied on "Lisogurski's [physiological monitoring] system 100/310, including sensor 102/312 for measuring blood oxygen saturation." '533-FWD, 25, 42-43 (citing '533-Pet., 28); Lisogurski, 4:6-20, 17:55-59, Figs. 1, 3, 3:44-46, 3:61-4:3,10:42-46, 17:30-32. Anthony, ¶110.

b. [1.a]: "a light source comprising a plurality of semiconductor sources that are configured to generate an output optical beam with one or more optical wavelengths, the light source configured to increase signal-to-noise ratio by increasing a light intensity relative to an initial light intensity from at least one of the plurality of semiconductor sources;"[8]

Lisogurski meets [1.a]. Anthony, ¶¶111-120.

To meet "**a light source that includes a plurality of semiconductor sources** that are light emitting diodes, the light emitting diodes **configured to generate an output optical beam with one or more optical wavelengths**" ('533 claims 5/13), the Board relied on **Lisogurski's** "[s]ensor 102/312," which includes "light source

[8] For readability, color-coding has been used to clarify the mapping of certain claim language to prior art.

130." '533-FWD, 25-26, 42-43 (citing '533-Pet. 29-31); Lisogurski, 10:48-64, 17:37-45, Figs. 1, 3. As the Board found, **Lisogurski's** "sensor 102/312 [] contain[s] multiple LEDs that emit and direct light toward a subject's tissue, including an LED that emits red light, and an LED that emits infrared light having a wavelength between 800 and 1000 nm," which also meets the prior construction of "beam" (§VIII.C).[9] '533-FWD, 25-26, 42-43 (citing '533-Pet., 29-30); Lisogurski, 4:6-45, 7:38-8:3, 10:48-52, 10:56-63, 17:37-45, 19:25-31, Figs. 1, 3. Anthony, ¶¶112-113.

To meet "**the light source configured to increase signal-to-noise ratio by increasing a light intensity from at least one of the plurality of semiconductor sources**" ('533 claims 5/13), the Board (applying its construction of "light source…configured to increase signal-to-noise ratio…," §VIII.A) found that light source 130 of **Lisogurski's** modified system (§IX.B.2) "increase[s] the brightness of the light sources in response to … noise to improve the signal-to-noise ratio." '533-FWD, 26, 42-43 (citing '533-Pet. 29-39); Lisogurski, 1:19-21, 1:44-46, 1:67-2:3, 5:55-6:6, 9:46-52, 9:57-60, 10:48-49, 11:38-41, 11:50-54, 14:49-55, 35:5-9; '533-Anthony ¶¶95-98. Anthony, ¶114.

For "**increasing light intensity of at least one of the plurality of semiconductor sources from an initial light intensity**" ('484 claim 1), the Board

[9] Vakil, 2:6-9. Anthony, ¶113.

relied on **Lisogurski's** disclosures "that by increasing light intensity the system may increase the brightness of light sources in response to noise to improve signal to noise ratio." '484-FWD, 27 (citing '484-Pet., 45-48); Lisogurski, 1:19-21, 1:44-46, 1:67-2:3, 5:55-6:6, 9:46-60, 10:48-49, 11:38-41, 11:50-54, 14:49-55, 25:49-55; 31:11-24, 31:39-55, 35:5-9, 37:6-22); '533-FWD, 26, 42-43. The Board also relied on **Lisogurski's** disclosure of "brightness (light intensity) as a parameter of the light drive signal, i.e., the signal that drives the LED" generated by light drive circuitry within sensor 102/312 as modified (§IX.B.2). '484-FWD, 27 (citing '484-Pet., 45-48); 533 FWD, 26. Anthony, ¶¶115-117.

c. [1.b]: "a measurement device configured to:"

Lisogurski meets [1.b]. Anthony, ¶¶121-123.

To meet "a wearable **measurement device**" ('533 claims 5/13), the Board relied on **Lisogurski's** "[s]ensor 102/312 for measuring blood oxygen saturation." '533-FWD, 25, 42-43 (citing '533-Pet., 28); Lisogurski, 4:6-20, 4:15-20, 17:55-59, *see also* Figs. 1, 3, 3:6-4:5, 4:21-64. Anthony, ¶¶122-123.

d. [1.c]: "receive a portion of the output optical beam, and deliver an analysis output beam to a sample;"

Lisogurski teaches and renders obvious [1.c]. *See also* §IX.B.3.[1.a]. Anthony, ¶¶124-128.

To meet the same limitation ('533 claims 5/13), the Board found that "a

[POSITA] would have known that" the "LEDs" in **Lisogurski's** "sensor 102" "are often covered by lensing encapsulants and would have selected such LEDs for [Lisogurski's] wireless sensor 102/312 in order to 'direct more of the light produced by the LED outward toward the tissue,' thereby improving the efficiency of wireless, battery-powered, sensor 102/312." '533-FWD, 35-36, 42-43 (citing '533-Pet., 39-40); Lisogurski, 7:38-8:3, 10:48-56, 19:25-31; *see also* '484-FWD, 23, 26-27. Such LEDs thus include lensing encapsulants to receive and deliver the light (*i.e.*, output optical beam) to a sample. Anthony, ¶¶125-128.

e. [1.d]: "a receiver configured to:"

Lisogurski renders obvious [1.d]. Anthony, ¶¶129-130.

To meet **"receiver"** ('533 claims 5/13), the Board relied on **Lisogurski's** "detector 140/318 and front end processing circuitry 150" of monitor 104 as modified (*see* §IX.B.2). '533-FWD, 37-39, 42-43 (citing '533-Pet. 45-49); Lisogurski, 7:39-42, 10:48-49, 11:9-27, 11:41-46, 12:42-45, 17:40-42, 16:2-9, Figs. 1, 3. Anthony, ¶130.

f. [1.e]: "receive and process at least a portion of the analysis output beam reflected or transmitted from the sample,"

Lisogurski renders obvious [1.e]. *See also* §IX.B.3.[1.d]. Anthony, ¶¶131-132.

To meet the same limitation ('533 claims 5/13), the Board relied on

Lisogurski's "detector 140/318" of the receiver (*see* §IX.B.3.[1.d]), as modified (§IX.B.2), to "detect[] the light that is reflected by or has traveled through the subject's tissue" and "convert[ing] the intensity of the received light into an electrical signal." '533-FWD, 37-39, 42-43 (citing '533-Pet. 44-45); Lisogurski, 17:39-42, 11:14-17, Figs. 1, 3; *see also* 11:9-10, 11:20-27, 11:41-46, 11:50-54. Anthony, ¶132.

g. [1.f]: generate an output signal representing at least in part a non-invasive measurement on blood contained within the sample,

Lisogurski renders obvious [1.f]. *See also* §IX.B.3.[1.d]. Anthony, ¶¶133-136.

To meet "**generate an output signal**" ('533 claims 5/13), the Board relied on **Lisogurski's** "detector 140" of the receiver (*see* §IX.B.3.[1.d]), as modified (§IX.B.2), generating a "detection signal," and front end processing circuitry 150 receiving and processing the detection signal to "provide" "one or more processed signals to back end processing circuitry 170" (depicted "output signal" in Fig. 1 below). '533-FWD, 37-39, 42-43 (citing '533-Pet. 48-49); Lisogurski, 11:9-10, 11:20-27, 11:41-46, 11:50-54, 12:42-45, Fig. 1. Anthony, ¶¶134-135.

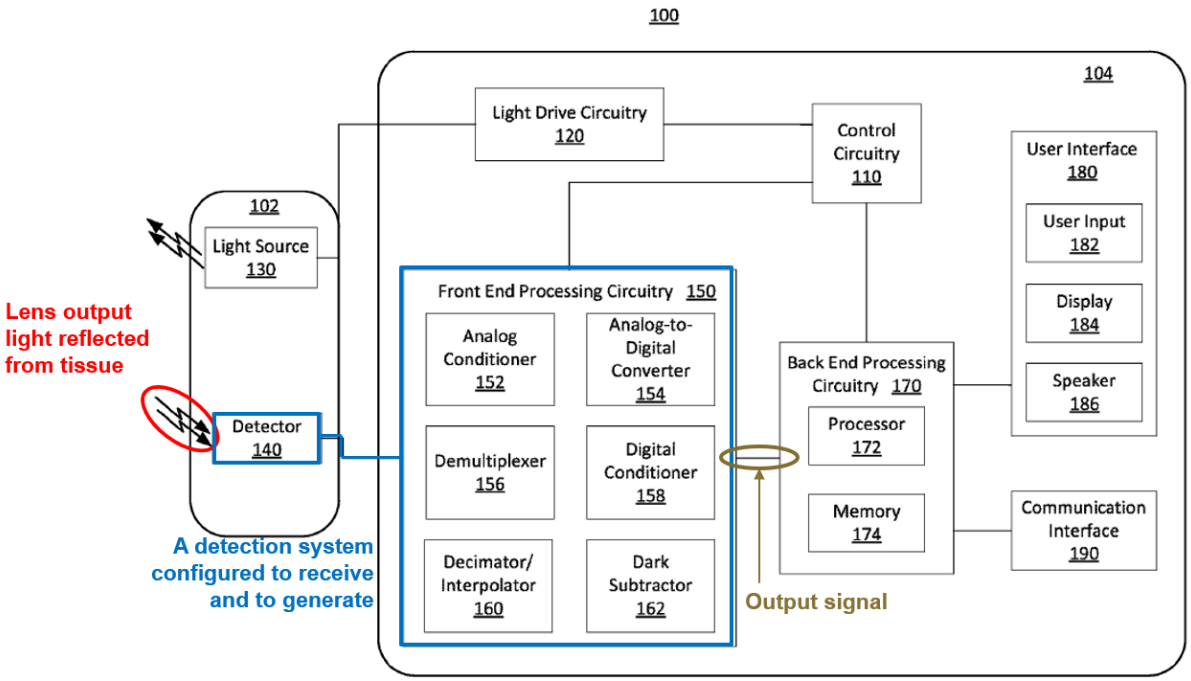

FIG. 1

Lisogurski also discloses that the output signal (e.g., "processed signal") **represents at least in part a non-invasive measurement on blood contained within the sample**, as claimed. **Lisogurski** discloses "the detection signal" generated by "detector 140" "may be processed" by front end processing circuitry 150 and, from the processed signal, "physiological parameters may be determined (e.g., based on the absorption of the Red and IR wavelengths in the subject's tissue)." 11:13-27. These absorption levels in the subject's tissue are used by detector 140 to "non-invasively measure the oxygen saturation of a patient's blood" to perform pulse oximetry. Figs. 1, 3, 3:61-4:62, 10:46-49, 17:55-59. The processed detection signal, or the processed signal, is thus an output signal generated by detector 140 as

modified (§IX.B.2), and represents at least in part a non-invasive measurement on blood contained within the subject's tissue. Anthony, ¶136.

h. [1.g]: "synchronize to the light source,"

Lisogurski renders obvious [1.g]. *See* §§IX.B.3.[1.a]&[1.d]. Anthony, ¶¶137-142.

To meet the same limitation ('533 claim 5), the Board relied on **Lisogurski's** "front end processing circuitry" 150 of the receiver (*see* §IX.B.3.[1.d]), as modified (§IX.B.2), "us[ing] the timing control signals to operate synchronously with light drive circuitry 120,' i.e., the circuitry that drives Lisogurski's LED-based light source." '533-FWD, 39 (citing '533-Pet. 44-45); Lisogurski, 11:41-46, 11:50-54. As discussed in further detail in connection with [19.b] below (*see* Section IX.B.3.[19.b]), **Lisogurski** discloses light drive circuitry 120 synchronizes the light source 130 by operating in "continuous modulation." Lisogurski, 11:50-54. Anthony, ¶¶138-142.

i. [1.h]: "capture light while the semiconductor sources are off and convert the captured light into a first signal,"

Lisogurski meets [1.h]. *See* §§IX.B.3.[1.d]&[1.a]. Anthony, ¶¶143-145.

To meet "**generate a first signal** responsive to **light received while the semiconductor diodes are off**" ('484 claim 1), the Board relied on **Lisogurski's** "the front end processing [circuitry 150]" of the receiver (*see* §IX.B.3.[1.d]), as

modified (*see* §IX.B.2), "us[ing] the current measured when the LEDs are off to generate a dark signal representative of ambient light." '484-FWD, 43-44 (citing '484-Pet. 54-55); Lisogurski, Figs. 2A-B, 6:12-19, 11:14-16, 12:59-13:6, 13:31-41, 13:67-14:6; Ex.1010 ("'484-Anthony") ¶¶197-198. Anthony, ¶¶144-145.

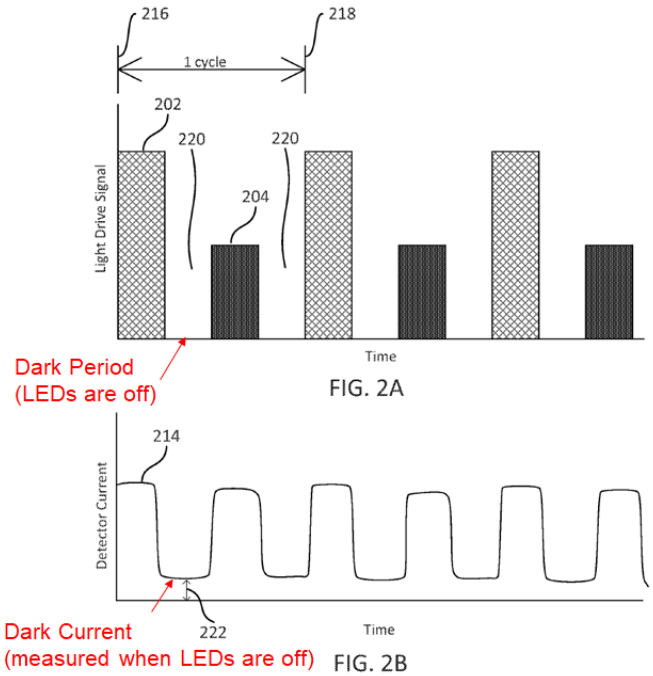

j. [1.i]: "capture light while at least one of the semiconductor sources is on and convert the captured light into a second signal, the captured light including at least a part of the at least a portion of the analysis output beam reflected or transmitted from the sample, and"

Lisogurski renders obvious [1.i]. *See* §§IX.B.3.[1.a]&[1.d]&[1.e]. Anthony, ¶¶146-151.

To meet "**generate a second signal** responsive to **light received while at least one of the semiconductor diodes is on**" ('484 claim 1), the Board relied on

Lisogurski's "front end processing circuitry" of the receiver (*see* §IX.B.3.[1.d]) "measur[ing] the signal when at least one LED is on to capture a portion of the optical beam, e.g., a red signal and an IR signal, reflected from the tissue." '484-FWD, 43-44 (citing '484-Pet. 55-56); Lisogurski, Figs. 2A-B, 6:12-19, 8:16-23, 11:12-20, 13:35-41, 13:67-14:2, 16:52-53, 17:8-10, 17:40-42. Anthony, ¶¶147-150.

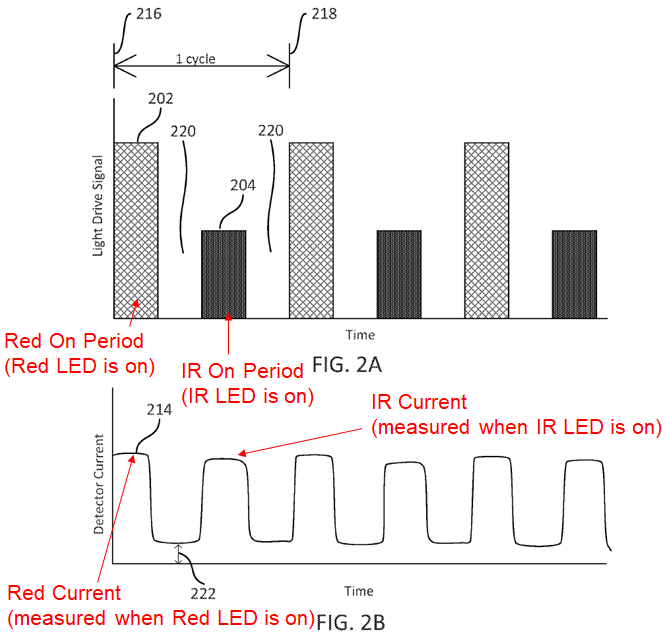

Additionally, **Lisogurski** discloses that the **captured light includes at least a part of the at least a portion of the analysis output beam reflected or transmitted from the sample**, as claimed. **Lisogurski** discloses that detector 140 "detect[s] the light that is reflected by or has traveled through the subject's tissue" when at least one light source, such as an LED is "on." 7:58-61, 8:16-23, 17:39-42. As discussed (§IX.B.3.[1.c]), **Lisogurski** teaches that the "light" emitted from an LED "into the tissue of a subject to generate physiological signals" is the **claimed**

"**analysis output beam**." 10:52-56. Thus, the light that is detected by detector 140 includes at least a portion of the light that is emitted by the LED that "is reflected by or has traveled through the subject's tissue." Lisogurski, 17:39-42. Anthony, ¶151.

k. [1.j]: "the measurement system further configured to improve the signal-to-noise ratio by differencing the first signal and the second signal;"

Lisogurski meets [1.j]. *See* §§IX.B.3.[1.pre]-[1.a]&[1.h]-[1.i]. Anthony, ¶¶152-155.

Lisogurski discloses the measurement system (e.g., "physiological monitoring system"). §IX.B.3.[1.pre]. Anthony, ¶153.

To meet "the detection system **further configured to:… increase the signal-to-noise ratio by comparing the first signal and the second signal**" ('484 claim 1), the Board relied on **Lisogurski's** "'dark subtraction' technique that subtracts the dark signal" (§IX.B.3.[1.h]) "from the red and IR signals," thus differencing the red/IR and dark signals (§IX.B.3.[1.i]), "to generate adjusted red and IR signals with noise removed, thereby improving signal-to-noise ratio." '484-FWD, 43-44 (citing '484-Pet. 54, 57); Lisogurski, Fig. 1, 6:7-19, 13:60-14:10, 16:33-54; 484-Anthony ¶¶194, 204-206. Anthony, ¶¶154-155.

l. [1.k]: "a smart phone or tablet comprising a wireless receiver, a wireless transmitter, a display, a microphone, a speaker, one or more buttons or knobs, a microprocessor and a touch screen, the smart phone or tablet configured to: receive and process at least a portion of the output signal, store and display the processed output signal, and transmit at least a portion of the processed output signal over a wireless transmission link; and"

Lisogurski teaches and renders obvious [1.k]. *See* §IX.B.3.[1.f]. Anthony, ¶¶156-162.

To meet "**smart phone or tablet**" ('484 claim 1), the Board relied on **Lisogurski's** sensor "designed to be used with a monitor that may be a portable, battery powered system." '484-FWD, 25-27 (citing '484-Pet., 40-42); Lisogurski, Figs. 1, 3, 1:16-18, 15:20-23, 15:19-23, 15:49-56, 18:65-66; '484-Anthony, ¶138. As the Board found, a POSITA would have found that Lisogurski's monitor 104, which is "portable," "battery powered," and having a "user interface 180" with "a touch screen," would include a smart phone or tablet. '484-FWD, 25-27 (citing '484-Pet. at 41-42); Lisogurski, Fig. 1, 1:16-18, 15:20-27, 18:65-66. Anthony, ¶157.

To show that **Lisogurski's** monitor 104 as modified (§IX.B.2) comprises a "**wireless receiver, a wireless transmitter, a display, a speaker,** a **microphone, one or more buttons or knobs, a microprocessor and a touch screen**" ('533 claims 5/13, '484 claim 1), the Board relied on **Lisogurski's** monitor 104 including

"communication interface 190" (which "include[s] one or more receivers" and "transmitters" "configured to allow…wireless communication"), user interface 180 (which includes a "display 184," "speaker 186," and user input 182 which includes a "microphone," "buttons," and "touch screen"), and "back-end processing circuitry 170" (which "includes microprocessor 172"). '533-FWD, 40, 42-43 (citing '533-Pet., 50-51); '484-FWD, '484-FWD, 25-27 (citing '484-Pet. 40-42); Lisogurski, 14:60-15:16, 15:19-23, 15:30-35, 15:43-57, 18:11-15, 18:49-65, 26:55-60, 27:31-36, Fig. 1. Anthony, ¶158.

To show that **Lisogurski's** monitor 104 as modified (§IX.B.2) is configured to "**receive and process at least a portion of the output signal, wherein the smart phone or tablet is configured to store and display the processed output signal, and wherein at least a portion of the processed output signal is configured to be transmitted over a wireless transmission link**" ('533, claims 5/13, '484 claim 1), the Board relied on **Lisogurski's** disclosure that "processor 172 in back end processing circuitry 170" of monitor 104 (as modified, *see* §IX.B.2) "'receive[s] and process[es] physiological signals [i.e., the output signal] received from front end processing circuitry 150' and 'determine[s] one or more physiological parameters based on the received physiological signals.' '533-FWD, 41-43 (citing '533-Pet., 50-53); '484-FWD, 25-26 (citing '484-Pet, 40-41); Lisogurski, 14:56-64, Fig. 1. As the Board further explained, "[m]onitor 104/314 displays the processed output signal

(i.e., a determined physiological parameter) because it includes display 184/320, which can 'display, for example, an estimate of a subject's blood oxygen saturation generated by monitor 104.'" '533-FWD, 41-43 (citing '533-Pet., 50-53); '484-FWD, 25-26 (citing '484-Pet, 40-41); Lisogurski, 15:30-35, Figs. 1, 3. Furthermore, the Board explained that "[m]onitor 104/314 stores the processed output signal because it includes memory 174, which can store "historical information [measured in] previous cardiac cycles." '533-FWD, 41-43 (citing '533-Pet., 50-53); Lisogurski, 14:64-15:16, 27:31-36, Fig. 1. Anthony, ¶159.

And, as the Board further found, "monitor 104/314 transmits the processed output signal over a wireless link because communications interface 190 can use a wireless communications protocol to transmit the signal to MPPM 326 for display on remote display 328," such as "WiFi, IR, WiMax, BLUETOOTH, UWB or other standards." '533-FWD, 41-43 (citing '533-Pet., 50-53); Lisogurski, 15:43-57, 18:11-15, 18:49-65, 26:55-60, Figs. 1, 3. Anthony, ¶160.

m. [1.l]: "a cloud configured to:"

Lisogurski meets [1.l]. Anthony, ¶¶163-164.

To meet the same limitation ('484 claim 1), the Board relied on **Lisogurski's** "multi-parameter physiological monitor (MPPM 326)" "coupled to a network to enable sharing of information with servers or other workstations, i.e., a cloud based server." '484-FWD, 26-27 (citing '484-Pet. 42-43); Lisogurski, 15:55-57, 18:49-

53, 18:63-65. Anthony, ¶164.

n. [1.m]: "receive, over the wireless transmission link, an output status comprising the at least a portion of the processed output signal,"

Lisogurski meets [1.m]. *See* §§IX.B.3.[1.k]&[1.l]. Anthony, ¶¶165-166.

To meet the same limitation ('484 claim 1), the Board relied on **Lisogurski's** "physiological parameters and other data [that] may be wirelessly transmitted to a server or a multi-parameters physical monitor (MPPM 326)." '484-FWD, 26 (citing '484-Pet. 42-43); '533-FWD, 42-43 (citing '533-Pet. 53-55); Lisogurski, 15:43-48, 18:49-53, 18:58-62, 20:8-13, 26:51-60. **Lisogurski** discloses that "processor 172" of "front end processing circuitry" 150 "determine[s] one or more physiological parameters based on the received physiological signals," which "communication interface 190" transmits to "a network, a server or other workstations," including MPPM 326. 14:62-64, 15:43-57. As **Lisogurski** teaches, these physiological parameters indicate a physiological status of the patient, such as "pulse rate, blood pressure, blood oxygen saturation (e.g., arterial, venous, or both), hemoglobin concentration (e.g., oxygenated, deoxygenated, and/or total)." 17:63-67. Anthony, ¶166.

o. [1.n]: "process the received output status to generate processed data, and store the processed data."

Lisogurski meets [1.n]. *See* §IX.B.3.[1.l]. Anthony, ¶¶167-168.

To meet the same limitation ('533 claims 5/13, '484 claims 1/7/15), the Board found that **Lisogurski's** MPPM 326 "process[es] the received output status" (e.g., "pulse rate, blood pressure, blood oxygen saturation …, hemoglobin concentration", *see* §IX.B.3.[1.m]) "to generate processed data, and … store[s] the processed data" because MPPM 326 "monitor 104/314 can 'publish the data," and thus MPPM 326 "would need to process the data and then store it" in order to "publish" it." '533-FWD, 42-43 (citing '533-Pet. 53-55); '533-Anthony ¶155; '484-FWD, 26 (citing '484-Pet., 44); Lisogurski, 15:43-48, 18:49-53, 18:58-62, 20:8-13, 19:1-19, 26:55-60. At minimum, it would have been obvious to do so. Anthony, ¶168.

p. [3]: "The measurement system of claim 1, wherein the light source is further configured to increase the light intensity from the plurality of semiconductor sources by spatially coupling the optical output beam from at least two of the plurality of semiconductor sources."

Lisogurski teaches and renders obvious [3]. Anthony, ¶¶169-171.

As discussed (§IX.B.3.[1.a]), **Lisogurski** discloses a "sensor 102/103" including "light source 130" that "increase[s] the brightness" of "multiple LEDs." 10:48-64, 9:50-52, 11:50-54. Anthony, ¶170.

Lisogurski also teaches and renders obvious increasing light intensity by spatially coupling multiple LEDs. For example, **Lisogurski** discloses that its physiological monitoring system "may operate a first light source" such as an "(IR)

LED," "at full or regular brightness," and "the brightness of a light source may be… increased during a more important period" by "power[ing] additional light sources," such as "red LEDs" during "periods of interest." 5:4-7, 7:40-64; 17:37-39, 19:24-27, 25:36-43. A POSITA would have understood that increasing brightness using additional light sources would have been done by spatially combining the output beams from each of the multiple LEDs (e.g., "(IR) LED" and "red LED") into one beam. It was a well-known way to increase brightness of a light source. Anthony, ¶171.[10]

q. [11.pre]: Identical to [1.pre]

See §IX.B.3.[1.pre]. Anthony, ¶¶172-74.

r. [11.a]: "a wearable measurement device for measuring one or more physiological parameters, including a light source comprising a plurality of semiconductor sources that are configured to generate an output optical beam with one or more optical wavelengths;"

Lisogurski's sensor 102/312 meets [11.a]. *See* §IX.B.3.[1.a]. Anthony, ¶¶175-177.

To meet "**a wearable measurement device for measuring one or more physiological parameters, including a light source comprising a plurality of semiconductor sources that are** light emitting diodes, the light emitting diodes

[10] *E.g.*, Keller, ¶89; Gratton, 2:16-23; Raley, 3:26-47; Dalke, 8:53-9:12.

configured to generate an output optical beam with one or more optical wavelengths" ('533 claim 13), the Board relied on **Lisogurski's** "sensor 102/312 for measuring blood oxygen saturation, [which may be] mounted on a user's fingertip, toe, earlobe, wrist, or thigh." '533-FWD, 25 (citing '533-Pet. 53-55); Lisogurski, 1:10-25, 3:43-46, 4:6-20, 17:55-59; *see also* '484-FWD, 23 (citing '484-Pet. 27-28). **Lisogurski's** sensor 102/312 "include[s] light source 130," which "may include LEDs" emitting light "of multiple wavelengths, for example, a red LED and an IR LED." Lisogurski, 10:48-57, 3:43-46, 17:55-59, 19:20-31. Anthony, ¶¶176-177.

s. [11.b]-[11.k]

Lisogurski meets [11.b], [11.c], [11.d], and [11.e]-[11.k] for the reasons discussed in §§IX.B.3.[1.a], IX.B.3.[1.b], IX.B.3.[1.c], and [1.e]-[1.k], respectively. Anthony, ¶¶178-211.

t. [11.l]: "a cloud configured to receive over the wireless transmission link an output status comprising the at least a portion of the processed output signal, to process the received output status to generate processed data and to store the processed data, and wherein the cloud is capable of storing a history of at least a portion of the received output status over a specified period of time."

Lisogurski meets [11.l]. *See* §§IX.B.3.[1.k]-[1.n]. Anthony, ¶¶212-215.

As discussed (§§IX.B.3.[1.l]-[1.n]), **Lisogurski** discloses and renders obvious

"**a cloud configured to receive, over the wireless transmission link, an output status comprising the at least a portion of the processed output signal to process the received output status to generate processed data.**" Anthony, ¶213.

To meet "the cloud is **configured to store a history of at least a portion of the one or more physiological parameters over a specified period of time**" ('484 claim 1, *see also* '533 claims 5/13), the Board found that **Lisogurski's** cloud (e.g., "MPPM 326," *see* [1.l]) "is configured to calculate physiological parameters, and … can perform historical analysis of prior cardiac cycles and calculate statistical information." '484-FWD, 26-27 (citing '484-Pet., 44); '533-FWD, 42-43 (citing '533-Pet., 53-55); Lisogurski, 15:43-48, 18:49-53, 18:58-62, 19:1-19, 20:8-13, 26:51-60, 26:55-60. As the Board agreed, a POSITA would have understood that "to calculate historical statistical information, the [physiological monitoring] system must store the historical physiological data ('*history of at least a portion of the one or more of the physiological parameters*') over the specified period of time (e.g., a certain number of cardiac cycles or a certain period of time)." '484-FWD, 26-27 (agreeing with '484-Pet. 44-43 (emphasis in original)); '484-Anthony, ¶¶150-154; *see also* '533-FWD, 42-43 (citing '533-Pet. 53-55); Lisogurski, 20:8-13, 26:51-60. At minimum, it would have been obvious to do so. Anthony, ¶¶214-215.

u. [19.pre]: "A wearable device for use with a smart phone or tablet, the wearable device comprising:"

Lisogurski teaches and renders obvious [19.pre]. As discussed (§IX.B.3.[11.a]), **Lisogurski** discloses **a wearable device**. Anthony, ¶¶216-218.

Additionally, the Board already found that **Lisogurski's** sensor 102/312 is **for use with a smart phone or tablet** in the'484-IPR. '484-FWD, 23 (citing '484-Pet. 27-28 (citing Lisogurski, 1:10-25, 3:43-46, 4:6-20)). As the Board found, **Lisogurski** teaches and renders obvious that sensor 102/312 (as modified, *see* §IX.B.2), and which meets the claimed "**wearable device,**" includes "front end processing circuitry 150" that "receive[s] a detection signal from detector 140 [and] provide[s] one or more processed signals to back end processing circuitry 170" of monitor 104. '484-FWD, 23-24 (citing '484-Pet. 33-34 (citing Lisogurski, 11:14-22, 12:42-45, 17:40-42)). As discussed (§IX.B.3.[1.k]), and as the Board found, a POSITA would have understood monitor 104 to meet "a smart phone or tablet." Anthony, ¶¶217-218.

v. [19.a]: "a measurement device including a light source comprising a plurality of semiconductor sources for measuring one or more physiological parameters,"

Lisogurski meets [19.a] for the reasons set forth in [11.a]. *See* §IX.B.3.[11.a]. Anthony, ¶¶219-220.

w. [19.b]: "the measurement device configured to: generate, by modulating at least one of the semiconductor sources having an initial light intensity, an input optical beam having one or more optical wavelengths, and"

Lisogurski meets [19.b]. *See* §§IX.B.3.[19.a]&[1.b]. Anthony, ¶¶221-222.

As discussed (§IX.B.3.[1.a]), **Lisogurski's** "sensor 102/312" (§§IX.B.3.[19.a]&[1.b])) includes **a plurality of semiconductor sources** (e.g., "multiple LEDs") with an **initial light intensity** (e.g., "brightness") that are configured to **generate an output optical beam with one or more optical wavelengths** (e.g., "an LED that emits red light, and an LED that emits infrared light having a wavelength between 800 and 1000 nm"). Anthony, ¶¶222-223.

Lisogurski further discloses such multiple LEDs operate in "continuous modulation," driven by the light drive signal for the light source's "on" and "off" periods or "high and low output states" to produce outputs of differing intensities. 11:61-12:9. Thus, the input beam is modulated, as the "light sources are driven in this manner … [to] emit pulses of light at their respective wavelengths into the tissue of a subject." 12:3-14; 6:19-26. Because **Lisogurski's** modulation of LEDs includes information by, e.g., pulsing the light to turn the light on and off at a certain frequency, **Lisogurski** teaches "modulating" under the prior district court and Board constructions (§VIII.D). Ex.1018, 16. Anthony, ¶¶224-225.

x. [19.c] "receive and to deliver a portion of the input optical beam to tissue, wherein the tissue reflects at least a portion of the input optical beam delivered to the tissue;"

Lisogurski meets [19.c] for the reasons discussed in [1.c] and [1.e]. *See* §§IX.B.3.[1.c], [1.e], [19.b] (discussing "output" and "input" beams). Anthony, ¶¶226-228.

y. [19.d]: "the measurement device further comprising a receiver configured to: capture light while the semiconductor sources are off and convert the captured light into a first signal, and capture light while at least one of the semiconductor sources is on and convert the captured light into a second signal, the captured light including at least a portion of the input optical beam reflected from the tissue;"

Lisogurski meets [19.d] for the reasons discussed in [1.d], [1.h], and [1.i]. *See* §§IX.B.3.[1.d], [1.h], [1.i]. Anthony, ¶¶229-231.

z. [19.e]: "synchronize to the modulation of the at least one of the semiconductor sources;"

Lisogurski meets [19.e]. Anthony, ¶¶232-235.

As discussed (§§IX.B.3.[1.a]&[1.g]), **Lisogurski** discloses a receiver configured to **synchronize** ([1.g]) **to at least one of the semiconductor sources** ([1.a]). Anthony, ¶¶232-233.

Lisogurski further discloses that the synchronization occurs **to the modulation** of the at least one of the semiconductor sources. **Lisogurski** teaches

that that detector 140/318 and front end processing circuitry 150, as modified (*see* §IX.B.3.[1.d], §IX.B.2), operate synchronously with the light sources' "continuous modulation." *See* §§IX.B.3.[1.b], [19.b]; Lisogurski, 11:61-12:9. Anthony, ¶¶234-235.

aa. [19.f] "the measurement device further configured to improve a signal-to-noise ratio of the input optical beam reflected from the tissue by: differencing the first signal and the second signal, and"

Lisogurski discloses and renders obvious [19.f]. Anthony, ¶¶236-238.

As discussed (§§IX.B.3.[1.b]&[1.j]&[1.i]), **Lisogurski** discloses **a measurement device** (e.g., "sensor" 102/312; §IX.B.3.[1.b]) **further configured to improve the signal-to-noise ratio by differencing the first signal and the second signal** (e.g., "subtract dark values from the Red and IR … to generate adjusted Red and IR signals"; §IX.B.3.[1.j]), where the **improved signal ratio is of the input optical beam reflected from the tissue** (e.g., "light that is reflected by or has traveled through the subject's tissue"; §IX.B.3.[1.i]). As the Board already noted, **Lisogurski** discloses a "dark subtraction" technique that "subtracts the dark signal from the red and IR signals to generate adjusted red and IR signals with noise removed, thereby improving signal-to-noise ratio." '484-FWD, 44 (citing '484-Pet., 54 57 (citing Lisogurski, 6:7-19, 13:60-14:10, 14:46-55, 16:33-54)). Anthony, ¶¶237-238.

bb. [19.g]: "increasing the light intensity relative to the initial light intensity from at least one of the semiconductor sources;"

Lisogurski meets [19.g] for the reasons discussed in [1.a]. *See* §IX.B.3.[1.a]. Anthony, ¶¶239-242.

cc. [19.h] "the measurement device further configured to generate an output signal representing at least in part a non-invasive measurement on blood contained within the tissue;"

Lisogurski meets [19.h] for the reasons discussed in [1.b], [1.d], [1.f]. §§IX.B.3.[1.b], [1.d], [1.f]). Anthony, ¶¶243-244.

dd. [19.i] "the wearable device configured to communicate with the smart phone or tablet, the smart phone or tablet comprising a wireless receiver, a wireless transmitter, a display, a voice input module, a speaker, and a touch screen; and"

Lisogurski meets [19.i] for the reasons in [1.k] and [19.pre]. §§IX.B.3.[19.pre]&[1.k]. Anthony, ¶¶245-247.

ee. [19.j] "the smart phone or tablet configured to: receive and to process at least a portion of the output signal, store and display the processed output signal, and transmit at least a portion of the processed output signal over a wireless transmission link."

Lisogurski meets [19.j] for the reasons discussed in [1.k]. *See* §IX.B.3.[1.k]. Anthony, ¶¶248-250.

ff. [20] "The wearable device of claim 19, wherein the light source is configured to further improve the signal-to-noise ratio of the input optical beam reflected from the tissue by increasing a pulse rate of at least one of the plurality of semiconductor sources from an initial non-zero pulse rate."

See §IX.B.3.[19]. **Lisogurski** discloses and renders obvious [20]. As discussed (§IX.B.3.[19.a]), **Lisogurski** discloses that the wearable device (sensor 102/312) of [19] includes **a light source**. Anthony, ¶¶251-252.

To meet the light source being configured to "**improve the signal-to-noise ratio…by increasing a pulse rate of at least one of the plurality of semiconductor sources from an initial non-zero pulse rate**" ('484 claim 1), the Board relied on two separate rationales: improving signal-to-noise ratio by (1) correlating sampling rate and LED firing (pulse) rate and (2) using cardiac cycle modulation (CCM) varying the light drive signal to remain synchronous with a subject's heart rate. '484-FWD, 27-35 (citing '484-Pet. 45, 48-51, '484-Pet.-Reply, 5). Anthony, ¶253.

As to the "sampling rate" rationale, the Board agreed that **Lisogurski** teaches "correlat[ing] sampling rate and LED firing (*pulse*) rate," explaining that "decreasing the duration of the 'off' periods (i.e., increasing the emitter firing rate) relates to an increased sampling rate." '484-FWD, 31-32 (citing '484-Pet., 22, 49-51; '484-Pet.-Reply, 5); Lisogurski, 35:24-31, Fig. 2A, *see also* 2:1-2, 5:55-6:6,

8:29-35, 9:46-52, 11:43-46, 11:52-55, 25:46-55, 27:44-52, 33:47-49, 33:56-58, 35:7-9, 37:6-22; *see also* '533-FWD, 26-30, 42-43. Further, "by increasing firing rate from an initial rate to correlate the firing rate to the sampling rate of an analog-to-digital (A-D) converter, Lisogurski improves signal-to-noise ratio by spreading the noise across more samples." '484-FWD, 30 (citing '484-Pet. 49-51); Lisogurski, 9:46-52, 37:6-22; '484-Anthony ¶¶178-180, 182. Because **Lisogurski** discloses LEDs with a firing (pulse) rate (*i.e.*, a duration of the "off" periods), which a POSITA would have understood, or at minimum found obvious, to be non-zero, and increasing that firing rate (i.e., decreasing that duration), **Lisogurski** teaches or at least renders obvious that the firing rate of its LEDs are increased from an initial non-zero pulse rate. Anthony, ¶¶254, 259.

Regarding the "CCM" rationale, the Board found that **Lisogurski** discloses that "the application of CCM [cardiac cycle modulation] alone improves signal-to-noise." '484-FWD, 30-36 (citing '484-Pet., 50-51, '484-Pet.-Reply, 6-8); Lisogurski, 9:57-60, 25:46-61, 25:50-61, 31:11-24, 31:39-55, 41:40-42:58; *see also* '533 FWD, 26-30. According to the Board, "Lisogurski teaches correlating LED pulse rate and cardiac cycle rate, for example by increasing LED pulse rate to match an increased cardiac cycle rate." '533-FWD, 29, 42-43; Lisogurski, 25:46-61 (light drive parameters, such as "firing rate," are "varie[d] with a period the same as or closely related to the period of the cardiac cycle, thus generating a cardiac cycle

modulation"). By increasing the pulse rate as the subject's heart rate increases, **Lisogurski** teaches improving SNR by reducing noise by 1-4%. '484-FWD, 30 (citing '484-Pet. 50-51; '484-Anthony ¶¶181-182); Lisogurski, 42:55-58 ("cardiac cycle modulation techniques may provide improved performance" "in the presence of moderate noise"), 25:46-26:14; *see also* '533-FWD, 27-30, 42-43. Because the pulse rate synchronizes with the subject's non-zero heart rate, and increases as the subject's heart rate increases, **Lisogurski** teaches or at least renders obvious increasing the pulse rate from an initial non-zero pulse rate. Anthony, ¶¶255-256.

Lisogurski also discloses that it is **the input optical beam reflected from the tissue** for which the signal-to-noise ratio is improved by increasing the firing rate. **Lisogurski** discloses that "the [physiological monitoring] system … receive[s] a signal," and that the physiological monitoring system can receive these signals "using a … detector," which, as discussed (§IX.B.3.[1.e]), "detect[s] the light that is reflected by or has traveled through the subject's tissue." *See* §IX.B.3.[1.e]; Lisogurski, 26:26-29, 33:65-67; *see also* §IX.B.3.[19.f] (Lisogurski discloses the input optical beam reflected from the tissue). Anthony, ¶¶257-258.

C. Ground 2: Lisogurski in view of LeBoeuf ([2], [4]-[6], [14]-[16], [21]-[22], [27])

1. LeBoeuf Overview (Ex.1026)

LeBoeuf discloses "light guiding earbud 30," including "earbud housing 16" having "a cover 18" with "cladding material 21 [which] may be reflective material."

¶¶107, 115, 123. Specifically, "cover 18 includes a cladding material 21 on the outer surface 18a thereof." ¶123, Fig. 8A (annotated). Light guiding earbud 30 also includes "optical detector[s] 26" and "optical emitter[s] 24," which may be LEDs. ¶92. Optical detectors 26 and optical emitters 24 are disposed in an arc formation. Fig. 8B (annotated). Cover 18 "serves as a light guide" for "scattered light … from an ear region and … guides the light to the optical detector 26" such that the detector 26 can receive the light emitted by the optical emitter 24 that has "interrogate[d] the surface of the ear, penetrate[d] the skin of the ear, and generate[d] a scattered light response." ¶¶103, 105; Fig. 8C (annotated); Fig. 3. Anthony, ¶260.

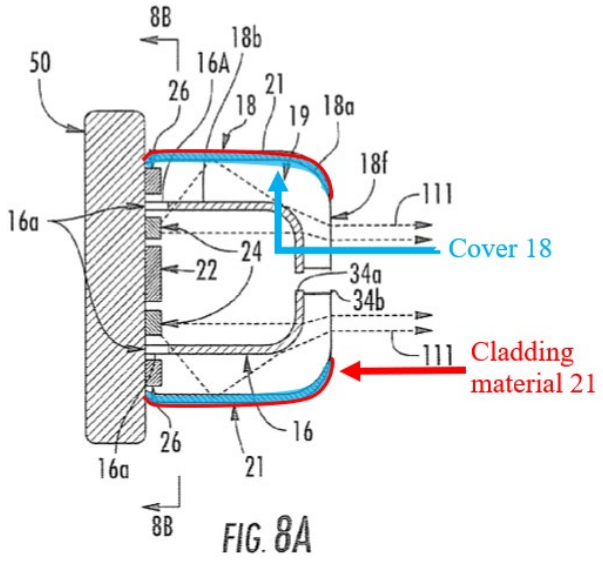

FIG. 8A

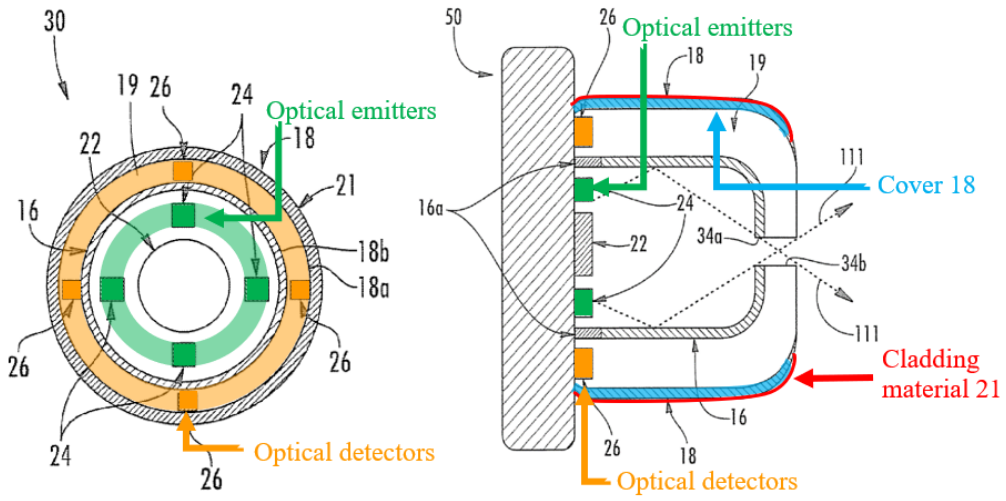

FIG. 8B FIG. 8C

2. Motivation to Combine Lisogurski and LeBoeuf

Lisogurski and **LeBoeuf** are in the same field as the '304—which includes physiological monitoring—and are reasonably pertinent to the problems addressed by the '304—e.g., improving optical physiological monitoring. '304, 5:4-5:40; Lisogurski, 1:10-11; LeBoeuf, Abstract, ¶¶25-26. Anthony, ¶261.

Regarding **LeBoeuf's** arc arrangement teachings, a POSITA would have been motivated to apply these teachings to **Lisogurski's** sensor to include optical emitters and detectors arranged along offset concentric arcs to increase detection of scattered light, thus improving accuracy of physiological measurements. A POSITA would have understood that light emitted into biological tissue undergoes significant scattering and absorption, and the reflected light exits the tissue at a wide range of

angles. *See* Lisogurski, 11:16-20. A POSITA would have recognized that a linear or closely grouped detector arrangement would fail to capture much of the angularly scattered light. Mendelson, 4:14-65. Accordingly, a POSITA would have been motivated to apply **LeBoeuf's** teachings of optical emitters and detectors arranged along arcs to improve the detection of scattered light from biological tissue and increase the signal-to-noise ratio of **Lisogurski's** wearable device. *See e.g.*, LeBoeuf, ¶105, FIG. 8B. Anthony, ¶¶262-263.

Regarding **LeBoeuf's** reflective material teachings, a POSITA would also have been motivated to apply these teachings to **Lisogurski** to employ a reflective material in **Lisogurski's** LEDs to improve the signal measurement quality of **Lisogurski's** physiological monitoring system.[11] **LeBoeuf** teaches reflective surfaces to receive the light reflected from the tissue sample and deliver or redirect the light to the detectors. LeBoeuf, ¶105. A POSITA would have understood that **LeBoeuf's** reflective material enhances the efficiency of the light delivery from the light reflected from or transmitted through the tissue to the detectors in the sensor, minimizing loss of light intensity due to scattering. LeBoeuf, ¶125 ("[T]his configuration may reduce unwanted optical signals from regions that may not be

[11] Chin, 3:28-33, 7:46-57; Colvin, 8:24-25, 51:28-52:8, Fig. 23D; '484-FWD, 55-59.

relevant to the physiological activity of interest.”).[12] Anthony, ¶265.

A POSITA would have had a reasonable expectation of success in applying **LeBoeuf’s** arc arrangement and reflective material teachings for earbud sensors to **Lisogurski**. Both references teach applying these physiological measurement systems to ears; thus, it would have been straightforward to apply **LeBoeuf’s** earbud sensor teachings to **Lisogurski’s** sensor on patients’ earlobes. Lisogurski, 4:6-20; LeBoeuf, ¶¶6, 10, 25-26. Further, **Lisogurski** discloses that “[a]ny suitable configuration of light source 316 and detector 318 may be used,” and that “sensor unit 312 may include multiple light sources and detectors, which may be spaced apart,” and **LeBoeuf** teaches a specific configuration. Lisogurski, 17:42-45; LeBoeuf, ¶¶6, 123, 125. Using different configurations for the light sources and detectors were well known in the art. Lisogurski, 17:42-45, LeBoeuf, ¶124. Likewise, use of reflective materials to focus light output was well known in the art. *E.g.*, Casciani, 16:23-57, FIGS. 4C, 4E. Thus, a POSITA would have known such a combination would predictably work and provide the expected functionality. Anthony, ¶¶264, 266-267.

[12] Valencell-093, ¶152.

3. Claim Limitations

a. [2] "The measurement system of claim 1, wherein the plurality of semiconductor sources comprises at least one of: light emitting diodes (LEDs), laser diodes (LD's), tunable LD's, and super-luminescent laser diodes (SLDs), and wherein the measurement system further comprises a reflective surface to receive and redirect at least some of the at least a portion of the analysis output beam reflected or transmitted from the sample."

See §§IX.B.3.[1.pre]-[1.n]. **Lisogurski** in view of **LeBoeuf** renders obvious [2]. Anthony, ¶¶269-274.

As discussed (§IX.B.3.[1.a]), **Lisogurski's** "multiple LEDs [light emitting diodes]" meets the **claimed "plurality of semiconductor sources compris[ing] at least one of:…LEDs."** *See* §IX.B.3.[1.a]. As discussed (§§IX.B.3.[1.c], [1.i]), **Lisogurski** teaches the "light" produced "outward toward the tissue" is then "reflected by or has traveled through the subject's tissue." 10:52-56, 17:39-42. Anthony, ¶¶269-271.

LeBoeuf discloses a reflective surface (*e.g.*, "a cover 18" with "cladding material 21 [which] may be reflective material") to **receive and redirect light reflected or transmitted from the sample** (*e.g.*, "serves as a light guide that… collects light external to the earbud housing 16 and delivers the collected light to the optical detector 26"). ¶¶103, 105, 107, 115. **LeBoeuf** discloses light-guiding earbud 30 having a "cover 18" with a "cladding material 21 [which] may be reflective

material." ¶¶107, 115. **LeBoeuf** further discloses cover 18 "serves as a light guide that… collects light external to the earbud housing 16 and delivers the collected light to the optical detector 26." ¶103. Specifically, **LeBoeuf** discloses the "optical detector 26 detects scattered light 110 from an ear region and the light guiding region 19 of the light guide 18 guides the light to the optical detector 26," and this scattered light is generated when light emitted by the optical emitter 24 "interrogates the surface of the ear, penetrates the skin of the ear, and generates a scattered light response 110," which thus includes light which has been transmitted or reflected by the ear. ¶105. Anthony, ¶¶272-273.

As discussed in §IX.C.2, a POSITA would have been motivated to modify **Lisogurski's** measurement system with **LeBoeuf's** reflective surface teachings to advantageously enhance the quality of signal measurements. Anthony, ¶274.

b. [4] "The measurement system of claim 1, wherein the receiver comprises a plurality of detectors arranged along a first arc, and wherein the plurality of semiconductor sources are arranged along a second arc."

See §IX.B.3.[1.pre]-[1.n]. **Lisogurski renders obvious the receiver** (*e.g.*, "detector" 140 and "front end processing circuitry" 150 as modified (§IX.B.2); §IX.B.3.[1.d]). Anthony, ¶¶275-281.

LeBoeuf discloses a plurality of detectors arranged along a first arc (*e.g.*, "optical detectors 26" arranged in the orange circle, *see* annotated Fig. 8B)**, and**

wherein the plurality of semiconductor sources are arranged along a second arc (*e.g.*, "optical emitters 24" arranged in the green circle, *see* Fig. 8B). LeBoeuf, Fig. 8B, ¶123. Anthony, ¶278.

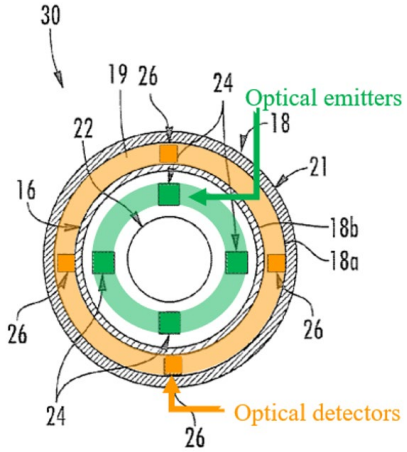

FIG. 8B

LeBoeuf discloses, in Fig. 8B, optical detectors 26 arranged along a first circle (outlined in orange), and optical emitters 24 are arranged along a second circle, offset from the first circle (outlined in green). Fig. 8B, ¶123. Anthony, ¶279.

As described in §IX.C.2, a POSITA would have been motivated to implement **Lisogurski's** detector 140/318 (as modified, *see supra* §IX.B.2) with **LeBeouf's** arc arrangement to advantageously improve the detection of scattered light from biological tissue, and increase the signal-to-noise ratio. Anthony, ¶280.

c. [5]-[6], [14]-[16], [21]-[22], [27]

Beyond the limitations recited in [4], claims [5]-[6], [15]-[16], and [21]-[22] additionally recite that the arcs are "offset" or "concentric." **Lisogurski** in view of

LeBoeuf meets these limitations for the reasons discussed in §IX.C.3.[4]. Anthony, ¶¶282-289, 294-313.

The combination also meets the additional limitations recited in [14] and [27] for the reasons discussed in §IX.C.3.[2]. Anthony, ¶¶290-293, 314-317.

See also §§IX.B.3.[11], [20], from which claims 14-16, 21-22, and 27 depend directly or indirectly. Anthony, ¶¶290-317.

D. Grounds 3-4: Grounds 1-2 in view of Tran ([1]-[6], [11]-[16], [19]-[22], [25]-[27])

1. Tran Overview

Tran discloses a patient heart monitoring system, including a "wearable appliance," such as a "wristwatch," that collects and transmits patient health data to a server and a statistical analyzer that analyzes the data to determine heart attack and stroke risks. Tran, Abstract, 2:66-67, 3:6-13, 8:28-53, 9:23-54, 11:1-31, 54:14-57:13. The "wearable appliance" can be used with a "smart phone[]," which sends the server the collected data when the wearable applicable is out of network range. Tran, 33:50-34:40. The collected data includes pulse oximetry measurements. Tran, 25:36-43, 26:17-29, 36:62-37:13, 46:25-42, 60:58-61:37, 74:29-67. **Tran's** statistical analyzers use "artificial neural networks," a form of artificial intelligence (AI), to analyze patient data to "flag potentially dangerous conditions," which "can be specified as an event or a pattern that can cause physiological…damage to the patient." Tran, 11:6-19, 22:24-28, 74:45-46, 75:18-20, 87:33-37, 85:60-61, 88:48-

50, 90:58-61, 94:57-65. Anthony, ¶¶318-322.

2. Motivation to Combine Lisogurski (alone or in view of LeBoeuf) and Tran

Like **Lisogurski** and **LeBoeuf**, **Tran** is analogous art, in the same field as the ’304 (including physiological monitoring), and is reasonably pertinent to the alleged problems addressed by the ’304 (including improving optical physiological monitoring). *See* §IX.C.2; Tran, 1:10-33, 2:66-67, 4:30-36, 36:62-37:12. Anthony, ¶323.

Regarding **Tran’s** “smart phone” teachings, a POSITA would have been motivated to apply these teachings to **Lisogurski’s** monitor 104/314 to enhance versatility and connectivity of **Lisogurski’s** sensor. Tran, 34:4-25. As the Board acknowledged, a POSITA would have found it obvious to modify **Lisogurski’s** monitor to be a smart phone according to **Tran’s** teachings. ’484-FWD, 47-48. As the Board explained, “Tran teaches using a smartphone with a portable, wearable sensor to send data to remote devices and other monitoring devices, facilitating the detection of emergencies in a manner consistent with the use of smartphones and tablets,” and these teachings would naturally fit with **Lisogurski’s** monitoring device, which is a “computing device that is portable, battery powered, and has a touchscreen.” ’484-FWD, 47-48 (citing ’484-Pet. at 60-61); Tran 33:58-34:40. Anthony, ¶324.

Regarding **Tran's** AI-driven analysis and pattern recognition teachings, a POSITA would also have been motivated to apply these teachings to **Lisogurski's** wearable sensor 102/312 (as modified, *see* §IX.B.2) to "improve how the data obtained by **Lisogurski's** [sensor] is stored and analyzed." '484-FWD, 46-47; Tran, 5:5-7, 22:23-28, 36:62-37:13; Lisogurski, 15:43-65, 18:58-65. As the Board found, **Lisogurski's** system "process[es] its collected data to track patient status," and a POSITA "would have been motivated to seek additional ways to use" such data. '484-FWD, 46-47; Tran, 22:23-28, 36:62-37:13; Lisogurski, 15:43-65, 18:58-65, 10:48-64. Specifically, the Board noted that a POSITA "would have looked to Tran" for teachings on "using [an] artificial neural network to analyze such data and provide warnings," such as using "neural networks to track and flag patterns in a patient's vital signs to recognize possibly dangerous conditions." '484-FWD, 46-47, 53; Tran, 9:23-54, 11:1-8, 12:4-16, 11:16:19; 23:39-50. Indeed, use of artificial neural networks (i.e., artificial intelligence) and pattern recognition to improve the speed and accuracy of data analysis in medical diagnosis and decision-making was well known in the art.[13] Anthony, ¶¶326-331.

[13] Demmin, 3:14-16; Behbehani, 2:25-39; Hoffberg, 95:13-15; Alvarez, ¶148; Lynn, 17:10-37, 35:1-36:12, Colman, 28:9-29:40, 30:28-34, 31:29-53, Segalowitz, 8:3-11, 45:6-11, 45:65-46:12, Terry, 2:21-4:36. Anthony, ¶¶327-328, 331.

A POSITA would have had a reasonable expectation of success in applying **Tran's** smart phone, AI-drive analysis, and pattern recognition teachings to **Lisogurski's** system (either alone or in view of **LeBoeuf**). All three references teach optical physiological measurement devices and techniques. *E.g.*, Lisogurski, 1:10-11; Tran, 36:62-37:12; LeBoeuf, ¶¶6, 123, 125. A POSITA would have understood that **Tran's** smartphone would be used for the same purpose as **Lisogurski's** monitor. Further, as discussed above, data analysis techniques such as pattern recognition, and the use of AI to perform these techniques were well known in the art and easily implemented and/or applied to **Lisogurski's** system. Thus, a POSITA would have known such a combination (yielding the claimed limitations) would predictably work and provide the expected functionality. Anthony, ¶¶325, 332.

LeBeouf's teachings as applied to the spatial configuration of the light sources and detectors and physical configuration of **Lisogurski's** sensor (§IX.C) do not concern the aspects of **Lisogurski's** system (i.e., the monitor and/or software within the monitor) where **Tran's** teachings would be applicable, and the above-discussed motivation and expectation of success would remain the same for **Lisogurski's** system applying **LeBoeuf's** teachings. Anthony, ¶333.

3. Claim Limitations

a. "Smart phone or tablet" ([1]-[6], [11]-[16], [19]-[22], [25]-[27])

As discussed (§IX.B.3.[1.k]), the Board already determined that **Lisogurski**

teaches and renders obvious "**a smart phone or tablet**." '484-FWD, 25-27 (citing '484-Pet. 40-41); *see* §IX.B.3.[1.k]. Anthony, ¶335.

To the extent further disclosure is required, **Tran further discloses a smart phone or tablet** (e.g., "smart phone"). As the Board found, **Tran** discloses using a "smartphone with a portable, wearable sensor to send data to remote devices and other monitoring devices." '484-FWD, 47-48 (citing '484-Pet. 60-61); Tran, 34:4-25 ("If the wearable appliance detects a cell phone," including "smart phones," it "communicates with the cell phone and provides information to the server 200 using the cellular connection"). The Board further found that "Tran's smartphone could be used in place of Lisogurski's monitoring device" and "facilitat[e] the detection of emergencies in a manner consistent with the use of smartphones and tablets." *Id.* Thus, as discussed in §IX.D.2, a POSITA would have been motivated to modify **Lisogurski's** monitor 104 (alone or as modified by **LeBoeuf**, *see* §IX.C.2) according to **Tran's** smart phone teachings to enhance the versatility and connectivity of **Lisogurski's** monitor. Anthony, ¶336.

b. [12.pre]: "The measurement system of claim 11, wherein the measurement system is configured to use artificial intelligence in making decisions;"

See §IX.B.3.[11]. **Lisogurski** in view of **Tran** renders obvious [12.pre]. '484-FWD, 48-49; '484-RFWD, 11. Anthony, ¶¶337-343.

As discussed (§IX.B.3.[11.pre]), **Lisogurski discloses the measurement**

system. Anthony, ¶¶338.

To meet **"the wearable device is configured to use artificial intelligence in making decisions…"** ('484 claims 2/18), the Board found that **"Tran** discloses feeding data from a wearable patient monitoring device such as those disclosed by **Lisogurski** to a statistical analyzer" that incorporates "engineered (artificial) neural networks," which is a form of artificial intelligence (AI). '484-FWD, 48-49 (citing '484-Pet., 61); '484-RFWD, 11; Tran, 3:6-13, 11:6-30, 22:24-30, 9:23-54, 85:60-61, 87:33-37, 88:48-50, 90:58-61. **Tran** discloses using AI to make decisions, such as determining when to warn a patient about potentially dangerous medical conditions. For example, as the Board found, **Tran's** AI-driven statistical analyzer "analy[zes] patient data [to] flag potentially dangerous conditions that can be specified as an event or pattern that can harm the patient." '484-FWD, 48-49 (citing '484-Pet., 61); Tran, 11:16-19, 9:23-54, 87:33-37, 85:60-61, 88:48-50, 90:58-61. When such dangerous conditions are detected, **Tran** discloses "display[ing] a warning to a patient and connect[ing] the patient to the appropriate emergency response authority." Tran, 87:33-37; *see also* 85:60-61, 88:48-50,90:58-61. '484-Pet., 61. Anthony, ¶¶339-340.

As discussed (*see supra* §IX.D.2), the Board found that a POSITA would have been motivated to apply **Tran's** teachings of an AI-driven statistical analyzer to **Lisogurski's** sensor 102/312 to advantageously improve analysis of the collected

physiological measurement data and determine when a patient should be alerted to dangerous health conditions. Anthony, ¶341.

c. [12.a] "wherein the measurement system is configured to perform pattern identification or classification, and wherein the measurement system is configured to apply a threshold function to a comparison with a stored data set; and"

Lisogurski in view of **Tran's** neural networks renders obvious [12.a]. Anthony, ¶¶344-351.

As discussed (§IX.D.3.[12.pre]), **Lisogurski discloses the measurement system.** *See* §§IX.D.3.[12.pre], [11]. Anthony, ¶345.

To meet "**configured to perform pattern identification or classification**" ('484 claims 4/12/21), the Board relied on **Tran's** disclosure that "neural networks are used to recognize patterns." '484-FWD, 53 (citing '484-Pet., 64); Tran, 9:23-54, 11:1-8, 11:16-19, 22:23-59, 23:4-16, 23:39-50, 24:45-48, 24:58-60, 80:24-81:3; '484-RFWD, 11-12. The Board also relied on **Tran's** teachings of "using the neural network with a Hidden Markov Model (a derived set of reference pattern templates) to perform pattern matching and pattern identification or classification." '484-FWD, 53 (citing '484-Pet., 64); Tran, 9:23-54, 11:1-8, 11:16-19, 22:23-59, 23:4-16, 23:39-50, 24:45-48, 24:58-60, 80:24-81:3; '484-RFWD, 11-12. For example, Tran's statistical analyzers use neural networks to identify patterns in a "user's habits and

movements" so that abnormal activity indicating a stroke can be detected. Tran, 11:37-39, 13:42-23:31. Anthony, ¶¶346-348.

To meet **"compare a property of at least some of the output signal to a threshold"** ('484 claims 3/8/16), the Board relied on **Lisogurski's** disclosure of "comparing a detected signal to a threshold or target value." '484-FWD, 50 (citing '484-Pet., 63 (citing Lisogurski, 24:41-57)). The Board also relied on **Lisogurski's** teachings of "compar[ing] the output signal to thresholds that identify portions of interest for further processing or to change light source modulation." '484-FWD, 50 (citing '484-Pet., 63 (citing Lisogurski, 9:46-52, 37:8-14)); *see also* Lisogurski, 40:42-41:39. For example, **Lisogurski** teaches that the received signal is sampled and used to determine "region[s] of interest" by using "threshold crossings" based on these samples. 33:65-67, 40:42-47. Because the received signals are sampled, a POSITA would have understood that **Lisogurski's** measurement system stores the received signal to select them as sample points. Lisogurski, 40:42-47, 41:15-25; Fig. 25. At minimum, it would have been obvious to do so. Anthony, ¶¶349-350.

As described in §IX.D.2, the Board found that a POSITA would have been motivated to modify **Lisogurski's** measurement system according to **Tran's** pattern recognition teachings to advantageously improve analysis of the collected physiological measurement data to determine when a patient should be alerted to dangerous health conditions. Anthony, ¶351.

a. [12.b] "wherein the measurement system is at least in part configured for selection or identification of an object, and wherein the measurement system is configured to improve a signal-to-noise ratio of the selection or identification by applying regression signal processing methodologies or multivariate techniques."

Lisogurski meets [12.b]. Anthony, ¶¶352-360.

As discussed (§IX.D.3.[12.pre]), **Lisogurski discloses the measurement system**. *See* §§IX.D.3.[12.pre], [11]. Anthony, ¶354.

To meet **"wherein the wearable device is at least in part configured to identify an object"** ('484 claim 3/8), the Board found that **Lisogurski's** sensor 102/312 "calculat[es] an amount of a blood constituent, e.g., oxyhemoglobin" in a tissue sample, which involves distinguishing and identifying oxyhemoglobin in blood. '484-Remand-FWD, 6 (citing '484-Pet.-Reply, 24); Lisogurski, 4:36-51. As the Board explained, "[a]s Lisogurski discloses a method of measuring oxygen saturation that uses different wavelengths to distinguish hemoglobin from oxygen carrying hemoglobin, i.e., oxyhemoglobin, Lisogurski teaches identifying an object, i.e., the blood constituent oxyhemoglobin." 484-RFWD, 4-7; Lisogurski, 4:36-62. Anthony, ¶¶355-356.

Lisogurski further discloses improving a signal-to-noise ratio. For example, **Lisogurski** discloses that in response to "background noise" caused by

patient motion," its physiological monitoring "system may increase the brightness of the light sources…to improve the signal-to-noise ratio" (SNR). 9:49-52. A POSITA would have understood, or at minimum found it obvious, that **Lisogurski's** teachings of improving SNR are applied to its identification of certain blood constituents (e.g., oxyhemoglobin) in tissue, because improving SNR would also improve the accuracy of measuring the amount of, and thus identifying, blood constituents (e.g., oxyhemoglobin) is in a tissue sample.[14] Anthony, ¶357.

Additionally, a POSITA would have found it obvious to use multivariate techniques to implement **Lisogurski's** "improve[ment] [of] signal-to-noise ratios" because multivariate techniques are commonly used methods to clean up and improve the accuracy of data.[15] Anthony, ¶358.

b. [13]: "The measurement system of claim 12, wherein the light source is configured to further increase the signal-to-noise ratio by increasing a pulse rate of at least one of the plurality of semiconductor sources from an initial non-zero pulse rate."

See §IX.D.3.[12]. **Lisogurski** meets [13] for the reasons discussed in [20]. Claim 13 is substantially identical to [20], except [13] does not reference an "optical beam." *See* §§IX.D.3.[12]&IX.B.3.[20]. Anthony, ¶¶361-364.

---

[14] Fine, 2:30-35; Norris, 3:12-35.

[15] Marbach, 11:57-63, 12:19-27; Purdy 6:1-9.

c. "[26.pre] The wearable device of claim 19, wherein the wearable device is configured to use artificial intelligence in making decisions; [26.a] wherein the wearable device is configured to perform pattern identification or classification, and wherein the wearable device is configured to apply a threshold function to a comparison with a stored data set; and [26.b] wherein the wearable device is at least in part configured for selection or identification of an object, and wherein the wearable device is configured to improve a signal-to-noise ratio of the selection or identification by applying regression signal processing methodologies or multivariate techniques."

See §§IX.D.3.[19.pre]-[19.j]. **Lisogurski** meets [26.pre] for the reasons discussed in [12.pre]-[12.b]. [26.pre] is substantially identical to [12.pre]-[12.b] except for the replacement of "measurement system" with "wearable device." A POSITA would have been motivated to implement **Tran's** AI teachings in **Lisogurski's** wearable sensor 102/312 (as modified, *see* §IX.D.2) to improve how the data obtained is stored and analyzed by the device without needing to involve an external device to avoid latency. *See* §§IX.D.3.[12.pre]-[12.b], IX.B.[19]. Anthony, ¶¶365-368.

E. Grounds 5-8: Grounds 1-4 in view of Carlson ([1]-[6], [11]-[16], [19]-[22], [25]-[27])

1. Carlson Overview

Carlson discloses an "optical pulsoximetry [device] used for non-invasive measurement of pulsation and oxygen saturation in arterial human or animal blood." Carlson, ¶2; *see also* ¶¶33, 49, Fig. 2.

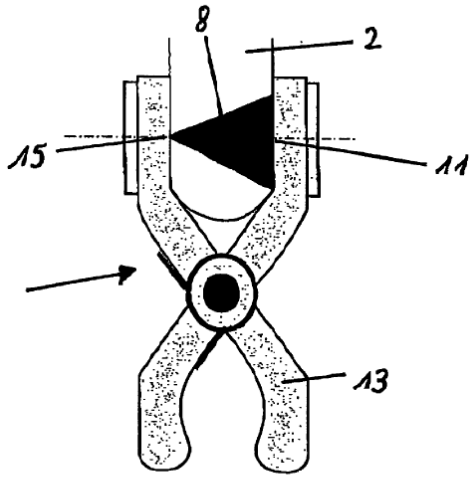

Figure 2

As shown in Figure 2, **Carlson** discloses ear clip sensor 1 of a pulsoximeter device. ¶¶33, 49. Sensor 1 includes light source 15 transmitting light beam 8 through a patient's earlobe 2, and light detector 11 to detect the transmitted light. ¶49. Light source 15 emits light at two wavelengths—660 nm and 890 nm—and can consist of two LEDs. ¶50. "[L]ight is emitted from the two LEDs 15 and is shaped by the two beam shaping elements or lenses 21 to be guided as beams 12 through the earlobe 2." ¶62. '533-FWD, 18-20. Anthony, ¶¶369-371.

Carlson includes "optical and/or electronic means for increasing Signal-to-Noise ratio (S/N) … in rough (optical) environmental conditions." ¶10. **Carlson's** LEDs emit light "not as a current or continuous light but as pulsed light." ¶69. **Carlson** "temporarily modulate[s] the optical radiation of the LED at the carrier frequency f0 in order to shift the power spectrum of the pulsoximeter signals into a higher frequency range where environmental optical radiation is unlikely." ¶65. Temporary modulation frequency f0 is "chosen in such a way that it is outside the frequency spectrum of sunlight and of ambient light." ¶69. This allows easy discrimination of pulsoximeter signals from environmental signals, such as sunlight and ambient light, and "increas[es] significantly the Signal-to-Noise and Signal-to-Background ratio." ¶69; *see also* '533-FWD, 18-20. Anthony, ¶372.

2. Motivation to Combine Carlson and Lisogurski (alone or in view of LeBoeuf and/or Tran)

Like **Lisogurski**, **LeBoeuf**, and **Tran, Carlson** is analogous art, in the same field as the '304 (including physiological monitoring), and is reasonably pertinent to the alleged problems addressed by the '304 (including improving optical physiological monitoring). *See* §§IX.C.2&IX.D.2; Carlson, ¶¶2, 4, 6-8. Anthony, ¶373.

Regarding **Carlson's** lens teachings, the Board found that a POSITA "would have had reason to employ lenses as taught by **Carlson** in **Lisogurski's** sensor to

focus light from the LED onto a person's skin" to "increase optical power and improve signal to noise ratio." 484-FWD, 23, 26-27. As the Board explained, **Carlson's** lenses "increase the optical signal power without increasing the actual power used by the system," thereby "increasing the Signal/Noise ... ratio" and "Lisogurski teaches the importance of both reducing power consumption and increasing signal-to-noise ratio" such that a POSITA would have applied Carlson's lenses teachings to Lisogurski's wireless sensor 102/312 "to increase its optical signal power and signal-to-noise ratio without increasing its actual power." '533-FWD, 37; Carlson, ¶¶10, 14; Lisogurski, 14:40-55, 37:6-20; *see also* '484-FWD, 23, 26-27. Anthony, ¶¶374-376.

A POSITA would have had a reasonable expectation of success in applying **Carlson's** teachings to **Lisogurski's** system. Both **Lisogurski** and **Carlson** teach optical physiological measurement systems utilizing LEDs as light sources, and using lenses to focus the light of LEDs was well known in the art, such that a POSITA would have found it routine, straightforward, and advantageous to apply **Carlson's** lenses to **Lisogurski's** optical physiological measurement. Lisogurski, 1:10-11, 10:48-56, 17:37-45; Carlson ¶54. Thus, a POSITA would have known such a combination (yielding the claimed limitations) would predictably work and provide the expected functionality. Anthony, ¶377.

Regarding **Carlson's** light source modulation teachings, the Board further

agreed that a POSITA would have been motivated to apply **Carlson's** technique of "us[ing] a light source modulation to temporarily modulate the optical radiation of the LED" at a frequency that "is chosen in such a way that it is outside the frequency spectrum of sunlight and of ambient light", "given that Lisogurski teaches that the firing rate of the LEDs can be adjusted in response to changes in environmental conditions, such as changes in background noise or ambient light." '533-FWD, 32-34 (quoting '533-Pet., 38). Indeed, as the Board noted, both **Carlson** and **Lisogurski** "recognize the problem of ambient light noise 'and the need to offset its negative impact on the signal-to-noise ratio'" such that a POSITA "would have found it obvious to configure Lisogurski to increase the firing rate (frequency) of LEDs as taught by Carlson." '533-FWD, 31-34 (citing '533-Pet., 38); '484-FWD, 37; Lisogurski, 9:46-60; Carlson, ¶¶67-69; '533-Pet., 39). Anthony, ¶¶378-379.

A POSITA would have had a reasonable expectation of success in applying **Carlson's** light modulation teachings to **Lisogurski's** system. As the Board already found, both references teach techniques for changing the operation of their light sources to reduce the effects of ambient light and noise, and a POSITA would have understood that any one of these techniques is a common substitute for another. '533-FWD, 33-34 (citing '533-Pet., 35, 37 (citing Lisogurski, 25:49-55, 27:44-52, 37:6-22; Carlson ¶69)). Thus, a POSITA would have known such a combination (yielding the claimed limitations) would predictably work and provide the expected

functionality. Anthony, ¶380.

Carlson's lens and light modulation teachings concern the mechanisms within and operation of **Lisogurski's** light source, **LeBoeuf's** teaching concerns the spatial configuration of the light sources and detectors, and the housing of **Lisogurski's** sensor unit (§IX.C), and **Tran's** teachings as applied to **Lisogurski** concern the monitor and/or software within the monitor (§IX.D), such that the above-discussed motivations and reasonable expectation of success would remain the same for **Lisogurski's** system alone or in view of **LeBeouf** and/or **Tran**. Anthony, ¶381.

3. Claim limitations

a. [1.c], [11.c], [19.c]

As discussed (§§IX.B.3.[1.c]&[11.c]&[19.c]), **Lisogurski** teaches and at least renders obvious the "receive" and "deliver" an output/input beam limitation. Anthony, ¶¶382-386.

To the extent additional disclosure is required for the "receive" and "deliver" an output/input beam limitation, Carlson discloses receiving the optical beam (e.g., "two lenses 21 that receive light beams 8 emitted by LEDs 15") **and delivering an analysis beam to a sample** (e.g., "deliver light bundles or beams 12 to sample 2"). Carlson, ¶¶45, 54, 62. Anthony, ¶387.

As the Board found, **Carlson** discloses "two light emitting sources for an

oximetric sensor, including beam shaping optics," which include "two lenses 21 that receive light beams 8 emitted by LEDs 15…and deliver light bundles or beans 12 to sample 2." '533-FWD, 36-37, 42-43 (citing '533-Pet., 42); Carlson ¶¶45, 54, 62. The Board further found a POSITA would have been motivated to apply **Carlson's** teaching of lens to **Lisogurski "**to focus light from the LED onto a person's skin and in doing so, increase optical power and improve signal to noise ratio." '484-FWD, 23, 26-27 (citing '484-Pet., 32-33; Carlson ¶¶14, 24, 62; Lisogurski, 6:3-6, 9:49-60, 13:60-14:10, 14:40-55, 37:6-20; '484-Anthony ¶¶82, 112-14). The same finding would apply to **Lisogurski** alone, or in view of **LeBoeuf** and/or **Tran.** §§IX.C.2, IX.D.2. Anthony, ¶¶388-392.

b. [13], [20]

As discussed (§§IX.D.3.[13], IX.B.3.[20]), **Lisogurski** teaches and at least renders obvious the "pulse rate" limitations. Anthony, ¶¶393-401.

To the extent additional disclosure is required for the "pulse rate" limitation, Carlson discloses wherein the light source is configured to further increase the signal-to-noise ratio (e.g., "increase[] significantly the Signal-to-Noise and Signal-to-Background ratio"**) by increasing a pulse rate of at least one of the plurality of semiconductor sources from an initial non-zero pulse rate (**e.g., "shift[ing] the frequency of the emitted light" so it is "substantially outside of frequency of noise and/or environmental signals"). Carlson, ¶¶62-69, claim 11.

Anthony, ¶395.

The Board agreed that **Carlson** teaches "pulsing the LEDs reduces the effects of ambient light including sunlight when the pulse frequency ('pulse rate') is chosen in such a way that it is outside the frequency spectrum of sunlight and of ambient light." '533-FWD, 33, 42-43 (quoting '533-Pet., 37-38); *see also* '484-FWD, 36-43. The Board specifically found that **Carlson** teaches "various means to improve a pulsoximeter's signal-to-noise," including "us[ing] a light source modulation to temporarily modulate the optical radiation of the LED" at a frequency that "is chosen in such a way that it is outside the frequency spectrum of sunlight and of ambient light...in the range of above approximately 1000 Hz." '533-FWD, 33, 42-43 (quoting Carlson, ¶¶62-69); *see also* '484-FWD, 36-43. Anthony, ¶¶396-399.

As the Board found, **Lisogurski in view of Carlson** render obvious this limitation because "both references recognize the problem of ambient light noise 'and the need to offset its negative impact on the signal-to-noise ratio.'" *See* '533-FWD, 30-35, 42-43; *see also* '484-FWD, 36-43. The same finding would apply to **Lisogurski** alone, or in view of **LeBoeuf** and/or **Tran.** §§IX.C.2, IX.D.2. Anthony, ¶¶396-399**.**

F. Grounds 9-10: Grounds 3 and 7 in view of Marbach ([12]-[13], [26])

As discussed, **Lisogurski** in view of **Tran** (either alone or in further view of

LeBeouf) renders obvious claims 12-13 and 26. §§IX.D.3.[12.pre]-[12.b]&[13]&[26]. **To the extent further disclosure of improving a signal-to-noise ratio by applying regression signal processing methodologies or multivariate techniques** is required (claims 12-13, 26), **Marbach discloses improving a signal-to-noise ratio by applying multivariate techniques** (e.g., "measurement algorithms" using "multivariate input data" "better[s] the measurement accuracy a.k.a. SNR"). Marbach, 11:57-63, 12:19-27. Anthony, ¶402.

Marbach discloses performing "measurement algorithms" on "multivariate input data" of measurement signals to "better the measurement accuracy a.k.a. SNR." 12:19-27; *see also* 11:57-63. The "noise correlated between the different pieces of multivariate input data can be subtracted out in the measurement algorithm" to produce the "user-desired output." *Id.* Anthony, ¶403.

Like **Lisogurski, Tran**, and **Carlson**, **Marbach** is analogous art, in the same field as the '304 (including physiological monitoring), and is reasonably pertinent to the alleged problems addressed by the '304 (including improving optical physiological monitoring). *See* §§IX.D.2&IX.E.2; Marbach, 3:35-50, 5:53-60, 6:14-19. Anthony, ¶404**.**

A POSITA would have been motivated to apply **Marbach's** teachings of using multivariate techniques to **Lisogurski's** measurement system to improve SNR and enhance the accuracy and stability of the measurements. Marbach, 3:36-67,

5:53-6:19. **Lisogurski** discloses the importance of, and techniques for, reducing noise, including removing "ambient and background signals" to "improve the signal-to-noise ratio" and "improve the quality of the determined physiological parameter[s]." Lisogurski, 6:7-19, 9:46-60, 9:46-52, 13:60-14:10. **Marbach** specifically emphasizes that combined analysis of multiple signals enables more accurate quantification of analytes like glucose. Thus, a POSITA would have been motivated to apply **Marbach's** teachings of multivariate techniques to further improve the SNR of the physiological measurements taken by the sensor in **Lisogurski's** measurement system, as explicitly contemplated by **Lisogurski**. Anthony, ¶405.

A POSITA would have had a reasonable expectation of success in applying **Marbach's** teaching to **Lisogurski's** physiological monitoring system to improve SNR. Both **Lisogurski** and **Marbach** teach optical physiological measurement systems utilizing LEDs as light sources. Lisogurski, 10:48-56; Marbach 3:36-67, 5:53-6:19, 7:17-32. Furthermore, using multivariate techniques to improve SNR was well known in the art. Thus, a POSITA would have found it routine, straightforward, and advantageous to apply **Marbach's** multivariate techniques to **Lisogurski's** optical physiological measurements. Lisogurski, 10:48-56; Marbach 3:36-67, 5:53-6:19, 7:17-32. A POSITA would have known such a combination (yielding the claimed limitations) would predictably work and provide the expected

functionality. Anthony, ¶406.

Marbach's teachings concern the improving the SNR of the light signal detected by **Lisogurski's** sensor, **Tran's** teachings as applied concern the monitor and/or software within the monitor (§IX.D), and **Carlson's** teachings as applied concern the mechanisms within and the firing rate of **Lisogurski's** light source (§IX.E), such that the above-discussed motivations and reasonable expectation of success would remain the same for **Lisogurski's** system alone or in view of **Tran and/or Carlson**. Anthony, ¶407.

X. SECONDARY CONSIDERATIONS

There is no evidence in the '304's prosecution history or elsewhere supporting any secondary considerations arguments, or evidence of nexus to any challenged Claim. *See generally* '304FH. Indeed, as demonstrated by the prior art referenced herein, any purported solutions to problems or unexpected results in the '304 were already well known. To the extent that PO contends that the accused products in the Texas Case are infringing and thus demonstrate commercial success, any such conclusory allegations would fail to provide any indication that the Claims are non-obvious. Such conclusory assertions would not demonstrate that Petitioners' products infringe, let alone show any nexus between any alleged commercial success and the Claims, or that any alleged success is due to an allegedly claimed component instead of the many unclaimed features of the accused products. To the extent PO

asserts the existence of any secondary considerations in its responses, Petitioners reserve the right to address any such evidence. Anthony, ¶¶408-409.

XI. CONCLUSION

Substantial, new, and noncumulative technical teachings have been presented for each Challenged Claim, which are rendered obvious for the reasons set forth above. Anthony, ¶¶71-407. There is a reasonable likelihood Petitioners will prevail as to each of these Claims. *Inter partes* review of the '304 Challenged Claims is accordingly requested.

Dated: August 5, 2025

Respectfully submitted,

By: /*James L. Davis, Jr.*/
Name: James L. Davis, Jr.
Registration No. 57,325
ROPES & GRAY LLP

Lead Counsel for Petitioners

CERTIFICATE OF COMPLIANCE

Pursuant to 37 C.F.R. § 42.24(a) and (d), the undersigned hereby certify that the Petition For *Inter Partes* Review complies with the type-volume limitation of 37 C.F.R. § 42.24(a)(i) because, exclusive of the exempted portions, it contains 13,922 words as counted by the word processing program used to prepare the paper.

Dated: August 5, 2025

Respectfully submitted,

By: /*James L. Davis, Jr.*/
Name: James L. Davis, Jr.
Registration No. 57,325
ROPES & GRAY LLP

Lead Counsel for Petitioners

CERTIFICATE OF SERVICE

I hereby certify that on August 5, 2025, I caused a true and correct copy of the foregoing Petition for *Inter Partes* Review of U.S. Patent No. 10,874,304 and supporting exhibits to be served via Federal Express on the Patent Owner at the following correspondence address of record as listed on Patent Center:

109543 - Brooks, Kushman P.C./Cheetah Omni MedSci
150 W 2nd St., Suite 400N
Royal Oak, MI 48067
UNITED STATES

———

A courtesy copy was also sent via electronic mail to Patent Owner's litigation counsel at the following addresses:

William E. Davis III
bdavis@davisfirm.com
DAVIS FIRM, PC

Daniel S. Stringfield
dstringfield@nixonpeabody.com
Timothy P. Maloney
tmaloney@nixonpeabody.com
Daniel D. Georgiev
dgeorgiev@nixonpeabody.com
Peter Krusiewicz
pkrusiewicz@nixonpeabody.com
NIXON PEABODY LLP

Corey T. Leggett
cleggett@nixonpeabody.com

NIXON PEABODY LLP

Elizabeth M. Chiaviello
echiaviello@nixonpeabody.com
Benjamin R. Holt
bholt@nixonpeabody.com
NIXON PEABODY LLP

Dated: August 5, 2025

By: /*James L. Davis, Jr.*/
Name: James L. Davis, Jr.
Registration No. 57,325
Lead Counsel for Petitioners