Trials@uspto.gov
571-272-7822

Paper 7
Date: April 22, 2020

UNITED STATES PATENT AND TRADEMARK OFFICE

BEFORE THE PATENT TRIAL AND APPEAL BOARD

APPLE, INC.,
Petitioner,

v.

OMNI MEDSCI, INC.,
Patent Owner.

IPR2020-00029
Patent 10,098,546 B2

Before BRIAN I. McNAMARA, JOHN F. HORVATH, and SHARON FENICK, *Administrative Patent Judges.*

McNAMARA, *Administrative Patent Judge*.

DECISION
Granting Institution of *Inter Partes* Review
35 U.S.C. § 314, 37 C.F.R. § 42.4

I. INTRODUCTION

Apple, Inc., ("Petitioner") filed a petition, Paper 1 ("Petition" or "Pet."), to institute an *inter partes* review of claims 1, 5, 8, 9, 11–13, 15, 16, and 18 (the "challenged claims") of U.S. Patent No. 10,098,546 B2 ("the '546 patent"). 35 U.S.C. § 311. Omni MedSci, Inc. ("Patent Owner") filed a Preliminary Response, Paper 6 ("Prelim. Resp."), contending that the petition should be denied as to all challenged claims. We have jurisdiction under 37 C.F.R. § 42.4(a) and 35 U.S.C. § 314, which provides that an *inter partes* review may not be instituted unless the information presented in the Petition "shows that there is a reasonable likelihood that the petitioner would prevail with respect to at least 1 of the claims challenged in the petition." Having considered the arguments and the associated evidence presented in the Petition and the Preliminary Response, for the reasons described below, we institute *inter partes* review of all challenged claims on all grounds.

II. REAL PARTIES IN INTEREST

Petitioner identifies itself as the sole real party-in-interest. Pet. xii. Patent Owner identifies itself as the sole real party-in-interest. Paper 4, 1.

III. RELATED MATTERS

A. Litigation Concerning the '546 Patent

The Petition states that the '546 patent is asserted in the following litigation:

Omni MedSci, Inc. v. Apple Inc., Action No. 2-19-cv-05673-YGR (N.D. Cal.) (pending);

Omni MedSci, Inc. v. Apple Inc., Action No. 2-18-cv-00429-RWS (E.D. Tex.) (terminated).

The PACER database indicates the Eastern District of Texas litigation was filed on October 15, 2018 (Dkt. Entry 1), one day before the October

16, 2018 issue date of the ’546 patent and was the subject of an inter-district transfer to the Northern District of California on September 11, 2019. The complaint alleges the Series 4 Apple Watch infringes the ’546 patent, its parent (U.S. Patent 9,861,286), and U.S. Patent 9,885,698. Petitioner was served with the complaint on October 18, 2018. Prelim. Resp. 23.

B. Related Patents

The Petition identifies the following related patents and patent applications:

U.S. Patent No. 9,861,286 (“the ’286 patent”) (parent of the ’546 patent)

U.S. Patent No. 9,757,040 (“the ’040 patent”) (grandparent of the ’546 patent)

U.S. Patent No. 9,500,635

U.S. Appl. No. 16/016,649 (continuation of ’546 patent), now issued as U.S. Patent 10,213,113 on Feb. 26, 2019; subject of *Omni MedSci v. Apple Inc.*, Case 4:20-cv-00563 YGR (N.D. Cal) filed 1/24/2020 (Dkt. Entry 1), answer filed Mar. 4, 2020 (Dkt. Entry 34); also subject of IPR2020-00209 filed Dec. 11, 2019)

C. Litigation Concerning the Parent and Grandparent Patents

The Petition identifies the following litigation concerning the above identified related patents:

Omni MedSci, Inc. v. Apple Inc., Action No. 2-19-cv-05924 (N.D. Cal.) (pending)[1];

[1] Dismissed as to ’286 patent and ’040 patent, Docket Entry 352, Jan. 22, 2020.

Omni MedSci, Inc. v. Apple Inc., Action No. 2-19-cv-05673-YGR (N.D. Cal.) (pending) ('286 patent only)[2];

Omni MedSci, Inc. v. Apple Inc., Action No. 2-18-cv-00134-RWS (E.D. Tex.) (terminated)[3];

Omni MedSci, Inc. v. Apple Inc., Action No. 2-18-cv-00429-RWS (E.D. Tex.) (terminated) ('286 patent only).

D. Patent Office Proceedings Concerning the Related Patents

1. *Proceedings concerning the '286 parent patent*

The Petition identifies the following proceedings concerning the '286 parent patent:

> *Apple Inc. v. Omni MedSci, Inc.*, IPR2019-00911, Decision Denying Institution (Paper 13) (PTAB Nov. 6, 2019);
>
> *Apple Inc. v. Omni MedSci, Inc.,* IPR2019-00914, Decision Instituting *inter partes* review (Paper 13) (PTAB Nov. 6, 2019); *id.*, Order Granting Motion to Terminate (pursuant to settlement) (Paper 21) (PTAB Feb. 4, 2020).

2. *Proceedings concerning the '040 grandparent patent*

The Petition identifies the following proceedings concerning the '040 grandparent patent:

> *Apple Inc. v. Omni MedSci, Inc.*, IPR2019-00910, Decision Denying Institution (Paper 16) (PTAB October 17, 2019);
>
> *Apple Inc. v. Omnimedsci, Inc.,* IPR2019-00917, Decision Instituting inter partes review (Paper 14) (PTAB Oct. 17, 2019); *id*., Order Granting Motion to Terminate (pursuant to settlement) (Paper 22) (PTAB Feb. 4, 2020).

---

[2] Dismissed as to '286 patent, Docket Entry 235, Jan. 22, 2020.

[3] The PACER database indicates this case was filed on April 6, 2018, and alleged infringement of the following patents: US 9,651,533, US 9,757,040, US 9,861,286, US 9,885,698.

3. *Proceedings concerning related patent US Patent 9,651,533*

Patent Owner identified the following proceedings concerning related U.S. patent 9,651,533. *See* Prelim. Resp. 19–22.

> *Apple v. Omni MedSci, Inc.*, IPR2019-00913, Decision Denying Institution (Paper 14) (PTAB October 16, 2019);
>
> *Apple Inc. v. Omni MedSci, Inc.*, IPR2019-00916, Decision Instituting *inter partes* review (Paper 16) (PTAB Oct. 18, 2019), r'hg denied (Paper 24) (Feb. 2, 2020).

Patent Owner refers to the IPRs challenging the '286 parent patent, the '040 grandparent patent, and the '533 related patent as "First Petitions." Prelim. Resp. 20.

4. *Other Proceedings*

We have identified the following USPTO proceeding concerning U.S. Patent No. 10,213,113 B2, identified by Petitioner as Appl. No. 16/016,649, which is a continuation of the '546 patent that is the subject of this proceeding:

> *Apple, Inc. v. Omni MedSci, Inc.*, IPR2020-00209, Petition (Paper 1) (PTAB Dec. 11, 2019), Preliminary Response (Paper 6) (PTAB Mar. 19, 2020)

A Decision on Institution has not been made in IPR2020-00209.

We have also identified the following proceedings concerning U.S. No. 9,885,698 that may be related and were terminated prior to institution pursuant to a settlement:

> *Apple, Inc. v. Omni MedSci, Inc.,* IPR2019-00912, Decision Settlement Prior to Institution of Trial (Paper 13) (PTAB October 16, 2019).
>
> *Apple, Inc. v. Omni MedSci, Inc.,* IPR2019-00915, Decision Settlement Prior to Institution of Trial (Paper 13) (PTAB October 16, 2019)

The following proceeding concerning U.S. Patent No. 10,188,299, which is a continuation of the ’533 patent, identified by Petitioner as related to the ’546 patent that is the subject of this proceeding, is also pending:

> *Apple, Inc. v. Omni Medsci, Inc.,* IPR2020-00175, Petition (Paper 1) (PTAB Dec. 11, 2019); Preliminary Response (Paper 6) (March 19, 2020).

A Decision on Institution has not been made in IPR2020-00175.

IV. THE ’546 PATENT

The ’546 patent is titled “Wearable Devices Using Near-Infrared Light Sources.” Ex. 1001, code (54). The invention relates to “[a] wearable device [that] includes a measurement device having light emitting diodes (LEDs) measuring a physiological parameter.” Ex. 1001, code (57). “The measurement device modulates the LEDs to generate an optical beam having a near-infrared multi-wavelength between 700–2500 nanometers.” *Id.* Lenses receive and deliver the optical beam to tissue that reflects the optical beam to a receiver. *Id.* The receiver has spatially separated detectors coupled to analog-to-digital converters configured to deliver receiver outputs. *Id.* The receiver captures light while the LEDs are off and reflected light from the tissue while the LEDs are on, to generate first and second signals, respectively. *Id.* Signal-to-noise is improved by “differencing the first and second signals and by differencing the receiver outputs.” *Id*. The measurement device further improves signal-to-noise ratio of the reflected optical beam by increasing light intensity of the LEDs relative to the initial light intensity. *Id*. The measurement device generates “an output signal representing a non-invasive measurement on blood contained within the tissue.” *Id*.

The Specification of the ’546 patent describes a device that employs near-infrared light, that is, light in the spectrum between approximately 700 nanometers to about 2500 nanometers, to provide non-invasive and noncontact detection of dental caries in teeth. *Id*. at 3:36–43, 6:7–9, 6:31–43. The Specification also describes the use of that light to determine blood flow and blood constituents in blood vessels. *See id*. at 4:35–38; 14:28–30 (“In one embodiment shown in FIG. 6A, the dorsal of the hand 600 may be used for measuring blood constituents or analytes.”). The light is provided in an input beam generated by a plurality of LEDs. *Id*. at code (57), 4:39–41. A sample of tissue, such as skin or teeth, reflects at least a portion of the input optical beam and a receiver receives the reflected beam to generate an output signal representing, at least in part, a non-invasive measurement on blood contained within the sample. *Id.* at code (57), 4:39–64. The Specification further describes, and the claimed invention requires, a light source that is “configured to further improve the signal-to-noise ratio of the optical beam reflected from the tissue by increasing the light intensity relative to the initial light intensity from at least one of the LEDs.” *Id*. at 5:1–4, claim 1; *see id*. at code (57). Figure 1 is illustrative and reproduced below.

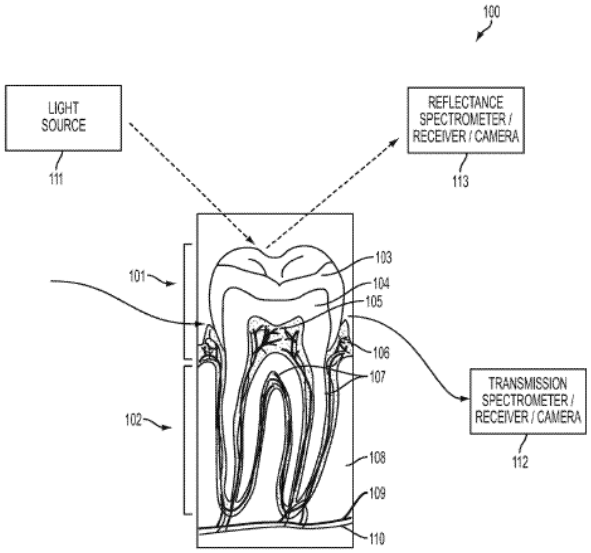

FIG. 1

Ex. 1001, Fig. 1. Figure 1 is an illustration of the structure of tooth 100, and further illustrates a system that includes light source 111, transmission spectrometer, receiver, or camera 112, and reflectance spectrometer, receiver, or camera 113. *Id*. at 7:21–40, 11:40–64. As shown in Figure 1, a reflectance measurement is obtained by directing light from light source 111 toward the occlusal surface of a tooth and detecting reflectance with reflectance spectrometer/receiver/camera 113. *Id*. at 11:55–58. An output signal includes a measurement on blood contained within the tissue. *Id*. at code (57), 3:66–4:2, 7:24–36. The light source is configured to improve a signal-to-noise ratio of the optical beam reflected from the tissue by increasing the light intensity of the light source from an initial light intensity to an increased light intensity. *Id*. at code (57), *see also e.g.*, 3:63–65, 4:31–35. The Specification further discloses "change detection schemes" that "may be used, where the detection system captures the signal with the light source on and with the light source off. . . . Then, the signal with and

without the light source is differenced. This may enable the sun light changes to be subtracted out." *Id*. at 24:2–10.

V. ILLUSTRATIVE CLAIM[S]

Challenged claims 1, 8, and 15 are independent. Petitioner has designated the corresponding limitations of claims 1, 8, and 15 using letters (a) through (n) as representative limitations. Claim 1, reproduced below with paragraph designations used in the Petition and annotated to reflect differences in the corresponding limitations of claims 1, 8, and 15, is illustrative of the subject matter of the '546 patent.

> 1.(a) A wearable device, comprising:
> (b) a measurement device including a light source comprising a plurality of light emitting diodes (LEDs) for measuring one or more physiological parameters,
> (c) the measurement device configured to generate, by modulating at least one of the LEDs having an initial light intensity, an optical beam having a plurality of optical wavelengths,
> (d) wherein at least a portion of the optical beam includes[4] a near-infrared wavelength between 700 nanometers and 2500 nanometers;
> (e) the measurement device comprising one or more lenses configured to receive and to deliver [at least][5] a portion of the optical beam to tissue, wherein the tissue reflects at least a portion of the optical beam delivered to the tissue;
> [(f) wherein the measurement device is adapted to be placed on a wrist or an ear of a user;][6]
> (g) the measurement device further comprising a receiver, the receiver having a plurality of spatially separated detectors
> (h) and one or more analog to digital converters coupled to the spatially separated detectors, the one or more analog to digital

[4] In place of "optical beam includes," claims 8 and 15 recite "plurality of optical wavelengths is."
[5] Claims 8 and 15 omit "at least."
[6] Claims 8 and 15 recite this limitation, claim 1 does not.

converters configured to generate at least two receiver outputs,

(i) the receiver configured to capture light while the LEDs are off and convert the captured light into a first signal and capture light while at least one of the LEDs is on and to convert the captured light into a second signal, the captured light including at least a portion of the optical beam reflected from the tissue;[7]

(j) the measurement device configured to improve a signal-to-noise ratio of the optical beam reflected from the tissue [by differencing the first signal and the second signal and][8] by differencing the two receiver outputs;

(k) the measurement device configured to further improve the signal-to-noise ratio of the optical beam reflected from the tissue by increasing the light intensity relative to the initial light intensity from at least one of the LEDs;[9]

(l) the measurement device further configured to generate an output signal representing at least in part a non-invasive measurement on blood contained within the tissue,

(m) wherein the output signal is generated at least in part by using a Fourier transform of signals from the receiver including at least one of the first and second signals and signals from the at least two receiver outputs;[10] and

(n) wherein the receiver further comprises one or more spectral filters positioned in front of at least some of the plurality of spatially separated detectors.

---

[7] Claims 1 and 15 recite this limitation, claim 8 does not.

[8] Only claims 1 and 15 recite the bracketed phrase "by differencing the first and second signals."

[9] Patent Owner refers to this limitation as the "Increasing Light Intensity During Operation" limitation. Prelim. Resp. 7.

[10] Claims 1 and 15 recite this limitation; claim 8 recites "wherein the output signal is generated at least in part by using a Fourier transform of a signal resulting from differencing signals from the at least two receiver outputs."

VI. ART CITED IN PETITIONER'S CHALLENGES

Petitioner cites the following references and Declarations in its challenges to patentability:

Reference	Designation	Exhibit No.
U.S. Patent Publication No. 2012/0197093 A1 by LaBoeuf	Valencell-093	Ex. 1005
U.S. Patent No. 5,795,300	Bryars	Ex. 1059
U.S. Patent No. 9,241,676 B2	Lisogurski	Ex. 1011
U.S. Patent No. 6,505,133	Hanna	Ex. 1007
U.S. Patent Publication No. 2010/0217099 A1 by LaBoeuf	Valencell-099	Ex. 1006
Declaration of Brian W. Anthony in Support of Petitioner	Anthony Decl.	Ex. 1003

VII. ASSERTED GROUNDS

Petitioner asserts that the challenged claims would have been unpatentable on the following grounds:

Claim(s) Challenged	35 U.S.C. §	Reference(s)/Basis
1, 5, 8, 9, 11, 13, 15, 16, 18	103	Valencell-093, Bryars
1, 5, 8, 9, 11, 13, 15, 16, 18	103	Valencell-093, Bryars, Lisogurski
1, 5, 8, 9, 11, 13, 15, 16, 18	103	Valencell-093, Bryars, Hanna (with or without Lisogurski)
12	103	Valencell-093, Bryars, Valencell-099 (with or without Lisogurski and/or Hanna)

VIII. LEVEL OF ORDINARY SKILL IN THE ART

The Petitioner relies on the testimony of its expert, Dr. Anthony to define the level of ordinary skill in the art. Pet. 14–15. Dr. Anthony, describes a person of ordinary skill as having a working knowledge of optical sensing techniques and their applications, as acquired through "an undergraduate education in engineering (electrical, mechanical, biomedical or optical) or a related field of study, along with relevant experience in studying or developing physiological monitoring devices (e.g., non-invasive optical biosensors) in industry or academia." Ex. 1003, Anthony Decl. ¶ 39. Dr. Anthony notes that "[t]his description is approximate; varying combinations of education and practical experience also would be sufficient." *Id.* Patent Owner does not respond to Dr. Anthony's description. We apply Dr. Anthony's description of the level of ordinary skill in this Decision, which is appropriate to the relevant technology as evidenced by the cited prior art. *See In re GPAC Inc.*, 57 F.3d 1573, 1579 (Fed. Cir. 1995).

IX. CLAIM CONSTRUCTION

The Petition has been accorded a filing date of October 17, 2019. For petitions filed on or after November 13, 2018, we interpret claims of an unexpired patent using the same standard applied by U.S. District Courts, as announced in *Phillips v. AWH Corp.*, 415 F.3d 1303 (Fed. Cir. 2005) (en banc). *See* 37 C.F.R. § 42.100(b) (2019).

Any special definition for a claim term must be set forth in the specification with reasonable clarity, deliberateness, and precision. *In re Paulsen*, 30 F.3d 1475, 1480 (Fed. Cir. 1994).

A. Beam

Noting that "beam" is expressly defined in the Specification, Petitioner proposes we construe "optical beam" and "light beam" to refer to photons of light transmitted from a particular location in space. Pet. 19–20 (citing Ex. 1001, 8:41–43). Patent Owner agrees with Petitioner's proposed construction. Prelim. Resp. 13–14. We apply the proposed construction because it is consistent with the use of the term in the Specification.

B. One or More Lenses

The District Court construed "one or more lenses" to have its plain and ordinary meaning. Ex. 1057, 15. Petitioner contends that construction "encompasses the only type of lens described by the'546 patent, which is one that will 'collimate or focus the light.'" Pet. 20 (citing Ex. 1001, 12:22–24, 12:54–55, 13:21–23, 16:43–44, 23:18–21). Petitioner further contends the plain and ordinary meaning is consistent with dictionary definitions, which define a lens as a transparent material that focuses rays of light. *Id*. (Citing Ex. 1046, 712; Exhibit 1041, 481). Noting that the District Court determined that "*one or more lenses*" should be given its plain and ordinary meaning, Patent Owner contends both "parties agree with this construction." Prelim. Resp. 14 (citing Ex. 1057 at 12, 15). We apply the District Court's construction that "one or more lenses" has its "plain and ordinary meaning[] without the need for further construction." Ex. 1057, 15.

C. Modulating At Least One of the LEDs

Petitioner notes that the District Court did not adopt either party's proposed construction of "modulating" and instead construed "modulating at least one of the LEDs" to mean "varying of the amplitude, frequency, or phase of the light produced by at least one of the LEDs to include information." Pet. 20– 21. Petitioner further notes that the District Court

rebuffed its attempts to delete "amplitude" from the construction, but contends it has no consequence in this proceeding, "as the prior art renders the claims unpatentable even under that narrower construction." *Id*. at 21. Patent Owner agrees with the construction applied by the District Court. Prelim. Resp. 14. For purposes of deciding the issues before us, we apply the construction applied by the District Court.

D. Spectral Filters

For purposes of this proceeding, both Petitioner and Patent Owner propose we adopt the construction of "spectral filters" applied by the District Court, i.e., "physical component or coating configured in the device to selectively pass light of a particular wavelength or range(s) of wavelength[s]." Pet. 21–22 (citing Ex. 1057, 22); Prelim. Resp. 14. We agree with the parties that the District Court's construction is consistent with the use of the term in the '546 patent, and we apply this construction.

E. Two Receiver Outputs

Petitioner notes that, in the District Court, Petitioner proposed that "two receiver outputs" be construed to mean means "two outputs representing the intensity of the light received by a detector," and that the District Court applied the plain and ordinary meaning. Pet. 22 (citing Ex. 1057, 24). Petitioner states that it adopts the District Court's construction in this proceeding. *Id*. Patent Owner agrees that the plain and ordinary meaning of this term should apply in this proceeding. Prelim. Resp. 15. We agree with the parties that the plain and ordinary meaning, as applied by the District Court, is the appropriate construction for this proceeding.

X. ANALYSIS OF PETITIONER'S CHALLENGES

A. Introduction

A patent claim is unpatentable under 35 U.S.C. § 103(a) if the differences between the claimed subject matter and the prior art are such that the subject matter, as a whole, would have been obvious at the time the invention was made to a person having ordinary skill in the art to which said subject matter pertains. *KSR Int'l Co. v. Teleflex Inc.*, 550 U.S. 398, 406 (2007). The question of obviousness is resolved on the basis of underlying factual determinations including: (1) the scope and content of the prior art; (2) any differences between the claimed subject matter and the prior art; (3) the level of ordinary skill in the art; and (4) objective evidence of non-obviousness. *Graham v. John Deere Co.*, 383 U.S. 1, 17–18 (1966).

B. Claims 1, 5, 8, 9, 11, 13, 15, 16, 18 As Obvious Over Valencell-093 and Bryars

1. *Valencell-093*

Valencell-093 describes a wearable monitoring apparatus, with a sensor module "includ[ing] an energy emitter that directs energy at a target region of the subject" and a detector that detects an energy response signal or physiological condition from the subject. Ex. 1005, code (57), ¶ 5. The wearable apparatus may be an earbud or earpiece, a wristband, armband, or headband, among others. *Id.* ¶¶ 6, 50, 110, 151, Figs. 4A, 4B, 23. Valencell-093 describes that the physiological condition, which may be detected, includes heart rate, blood pressure, and blood constituent data such as blood oxygen level. *Id.* ¶¶ 6, 50, 109. Figures 4A and 4B of Valencell-093, reproduced side-by-side below, are a side view (Figure 4A on the left) and front view (Figure 4B on the right) of a human ear with an earbud monitor according to one embodiment of the invention. *Id.* ¶¶ 57, 58.

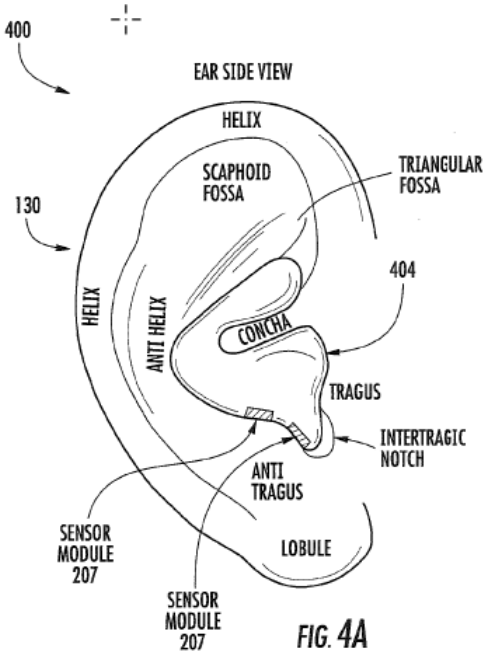

FIG. 4A

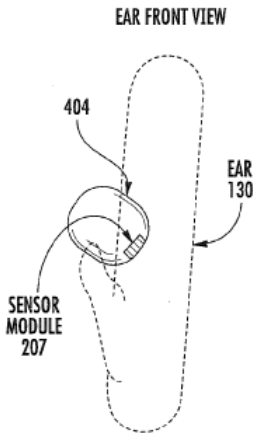

FIG. 4B

Figures 4A and 4B show ear 130 with biometric audio earbud 404 including sensor modules 207. *Id*. ¶ 110. Sensor module 207 is illustrated in Figure 2, reproduced below. *Id*. ¶¶ 54, 109.

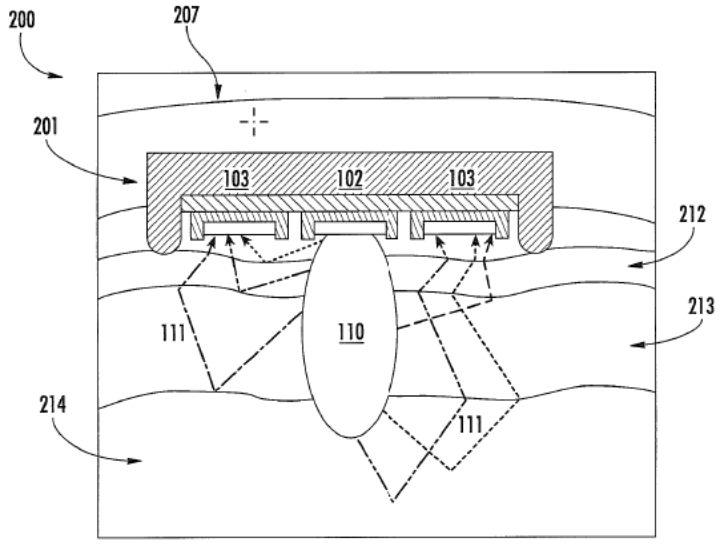

FIG. 2

Figure 2 illustrates sensor module 207, which includes optical emitter 102 and optical detectors 103. Emitter 102 generates one or more optical

wavelengths 110, producing scattered optical energy 111, which is modulated by changes in the skin tissue (epidermis 212, dermis 213, and subcutaneous layers of skin tissue 214), and thus may contain information associated with a physiological condition of the subject. *Id.* ¶ 109. Figure 7, reproduced below, depicts a sensor module configuration according to some embodiments of Valencell-093. *Id.* ¶ 60.

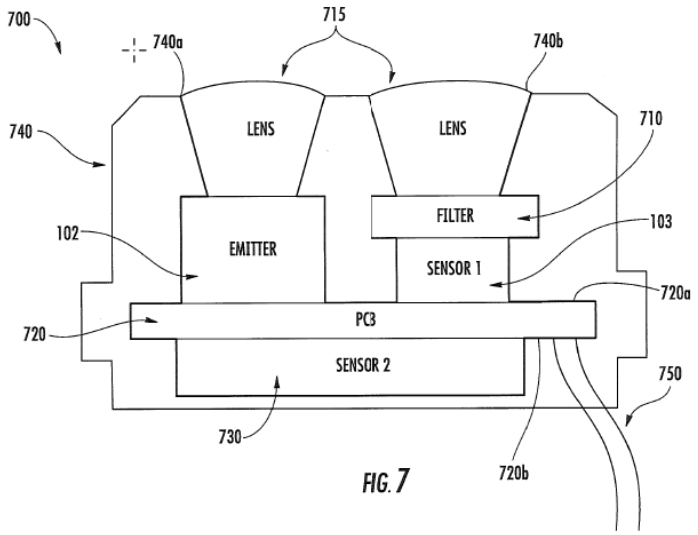

FIG. 7

Figure 7 shows a sensor with over molded design that includes sensor lenses 715, respectively covering emitter 102 and sensor 103, which are used "[t]o guide light from the optical emitter 102 towards the skin 130 of a subject and to direct light from the skin 130 to the optical detector 103." *Id.* ¶¶ 116, 118. In the embodiment shown in Figure 7, the emitter and sensor lenses 715 are physically separate. *Id.* ¶ 118. In such cases, Valencell-093 teaches that the lenses "may be isolated by at least one light opaque barrier region greater than 50 μm in thickness," which may be metal. *Id.* Filter 710 "may serve as both an optical wavelength filter and an attenuation filter" to block unwanted sunlight but still allow wavelengths from the optical emitter to be received at sensor 103 in the form of attenuated optical scatter 111. *Id.* ¶¶ 117, 123. "To offset this unwanted reduction in optical scatter 111, the

intensity of the optical emitter 102 may be increased to increase the ratio of physiological optical scatter 111 from blood vessels with respect to unwanted sunlight." *Id.* ¶ 123. Because there may be environmental interference from, e.g., "sunlight, ambient light, airflow, [or] temperature" the monitoring apparatus of Valencell-093 may obtain an "optical interaction response" at the detector (sensor 103) when the pulsed optical energy 110 is produced, and a second response when the pulsed optical energy is in an off state. *Id.* ¶ 108. These two signals are used to remove the environmental interference and generate an accurate physiological signal. *Id.*

2. *Bryars*

Bryars discloses a heart rate monitor worn, for example, on a user's wrist to monitor heart pulse rate during physical exercise or activity. Ex. 1059, 1:7–12. Signals from piezoelectric or optical sensors that detect the presence of a pulse in an artery are converted to digital signals and digitally processed. *Id.* at 3:31–49. Figure 9 of Bryars is reproduced below:

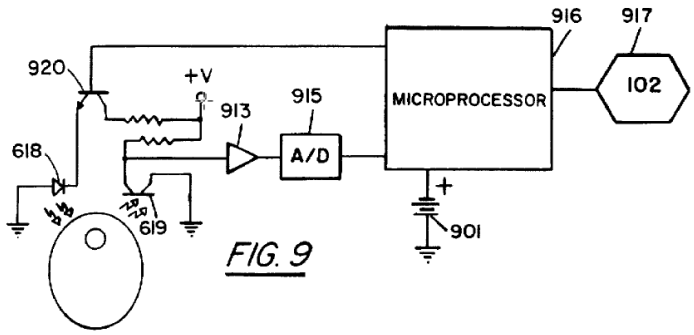

As shown in the optical sensor of Bryars's Figure 9, transistor 920 switches LED 618 on and off. *Id.* at 6:24–32. When turned on, LED 618 illuminates the radial artery (not shown) and photo transistor 619 detects the reflected light signal. *Id.* at 6:32–34. The reflected signal is amplified in pre-amplifier 913, converted to a digital signal in A/D converter 915 and provided to microprocessor 916. *Id.* at 6:34–36. When LED 618 is off,

photodetector 619 detects ambient light, producing an ambient light signal that is amplified in pre-amplifier 913, converted to a digital signal in A/D converter 915 and provided to microprocessor 916. *Id.* at 6:42–44. The digital signal representative of the ambient signal when LED 618 is off is subtracted from the digital signal representative of the signal detected when LED 618 is on, thereby removing the effect of the ambient light. *Id.* at 45–50. Bryars also discloses optimizing the signal-to-noise ratio by using an LED with a selected spectral output, a filter that limits the input light spectrum supplied to the photodetector by transmitting only light from the LED and ambient light in the same spectrum, and implementing output sample and hold circuits that provide signal averaging. *See id.* at 6:58–8:18.

Figure 12 of Bryars is reproduced below:

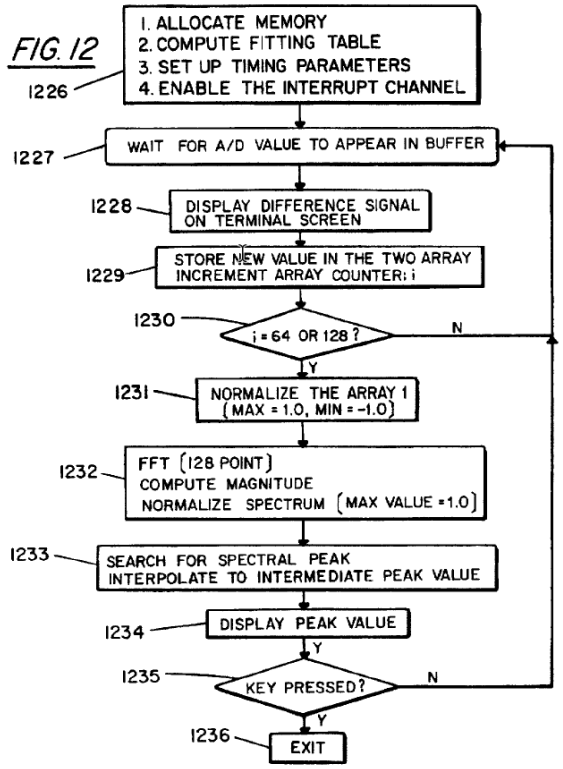

Figure 12 of Bryars is a flowchart of software functions that "causes the pulseometer to function properly in a relatively high level noise environment

caused by body motion." *Id.* at 9:8–11. Samples are placed in an indexed memory array, whose contents are sent to the FFT processing algorithm. *See id.* at 10:3–45. When an array is filled with differenced data from A/D converters, the data is normalized to values between -1.0 and 1.0 and a 128 point FFT is computed. *Id.* at 10:25–38. The peak value in the spectrum is then determined. *Id.* at 10:39–43.

3. *Independent Claims 1, 8, and 15*

As discussed in Section V above, Petitioner identified representative claim limitations (a) through (n) for independent claims 1, 8, and 15. We address these representative claim limitations in the following analysis.

a) Preamble (Representative Claim Limitation (a))

Petitioner designates representative claim limitation (a) as the preamble, which recites a wearable device. As Petitioner notes, Valencell-093 teaches a wearable Bluetooth earbud with a physiological sensor. Pet. 28 (citing Ex. 1005 ¶ 6, Figs. 4–5, 9–17,). The Patent Owner's Preliminary Response does not dispute that Valencell-093 teaches a wearable device and on the present record and for the purposes of this Decision, we agree with Petitioner that Valencell-093 discloses this feature.

b) Representative Claim Limitation (b)

Representative claim limitation (b) recites "a measurement device including a light source comprising a plurality of light emitting diodes (LEDs) for measuring one or more physiological parameters." As Petitioner points out, Valencell-093 discloses a sensor that measures a user's physiological parameters using emitters that can include LEDs. Pet. 29 (citing Ex. 1005 ¶¶ 6, 7, 38. 50, 107–109, 130, Figs, 1, 2, 4A, 4B, 5, 7–17). The Patent Owner's Preliminary Response does not dispute that Valencell-093 teaches representative claim limitation (b) and on the present record and

for the purposes of this Decision, we agree with Petitioner that Valencell-093 discloses this limitation.

c) Representative Claim Limitation (c)

Representative claim limitation (c) recites "the measurement device configured to generate, by modulating at least one of the LEDs having an initial light intensity, an optical beam having a plurality of optical wavelengths." Petitioner cites Valencell-093's disclosure of a pulsed light beam directed to a location in space (the target region of the subject) and the beam being composed of one or more optical wavelengths. Pet. 30 (citing Ex. 1005 ¶¶ 12, 19, 33, 44, 109, 114, 130). In Valencell-093, '"modulated energy' . . . refers to energy (e.g., optical energy . . .) that is emitted in pulses and/or that is emitted such that the amplitude, frequency, phase, or intensity is varied." Ex. 1005 ¶ 97. The Patent Owner's Preliminary Response does not dispute explicitly that Valencell-093 teaches representative claim limitation (c). To the extent that Valencell-093 discloses in some embodiments "the energy emitter emits pulsed or modulated energy," (*see* Ex. 1005 ¶¶ 8, 46), we agree with Petitioner that Valencel-093 teaches "modulating at least one of the LEDs having an initial light intensity," as recited in claim limitation (c). Pet. 30. We address the parties' arguments concerning intensity (*id*. at 30–31) in our discussion of representative claim element (k).

d) Representative Claim Limitation (d)

Representative claim limitation (d) recites "wherein at least a portion of the optical beam includes a near-infrared wavelength between 700 nanometers and 2500 nanometers." As Petitioner notes, Valencell-093 discloses the LEDs generate optical beams at one or more optical wavelengths and in at least one embodiment the wavelength is centered at

930 nm, i.e., between 700 and 2500 nanometers. Pet. 34 (citing Ex. 1005 ¶¶ 109, 114, 117, 130, Fig. 2). The Patent Owner's Preliminary Response does not dispute that Valencell-093 discloses representative claim limitation (d) and on the present record and for the purposes of this Decision, we agree that Valencell-093 discloses this limitation.

e) Representative Claim Limitation (e)

Representative claim limitation (e) recites "the measurement device comprising one or more lenses configured to receive and to deliver at least a portion of the optical beam to tissue, wherein the tissue reflects at least a portion of the optical beam delivered to the tissue." Petitioner cites Valencall-093 as disclosing a sensor module with lenses that focus light emitted by the optical beam onto a target region of the user's ear. Pet. 35–36 (citing Ex. 1005 ¶¶ 16, 17, 118, 125, 135, Fig. 7). Petitioner also provides annotated Figure 2 shown below.

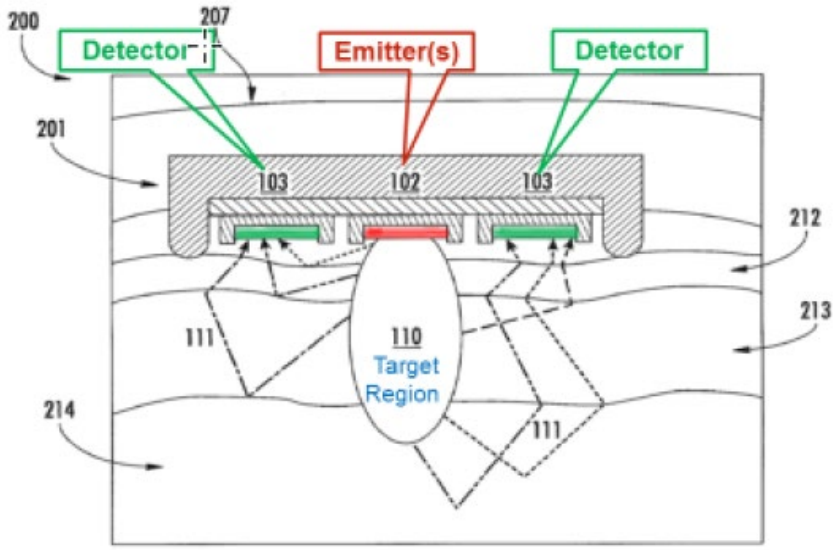

FIG. 2

Id. at 36. Petitioner states that in Figure 2, Valencell-093 discloses "the tissue of the target region of the ear scatters and reflects the light delivered by the lens-covered emitter 102." *Id.* (citing Ex.1005 ¶¶ 107, 109, 118, Fig. 2; Ex.1003, Anthony Decl. ¶ 109). The Patent Owner's Preliminary Response does not dispute that Valencell-093 discloses representative claim limitation (e) and on the present record and for the purposes of this Decision, we agree that Valencell-093 teaches this limitation.

f) Representative Claim Limitation (f)

Representative claim limitation (f) is not a limitation of claim 1, but is a limitation in claims 8 and 15. Representative claim limitation (f) recites "wherein the measurement device is adapted to be placed on a wrist or an ear of a user." The Patent Owner's Preliminary Response does not dispute that Valencell-093 discloses representative claim limitation (f) and on the present record and for the purposes of this Decision, we agree with Petitioner that Valencell-093 discloses this limitation. Pet. 36–37 (citing Ex. 1005 ¶¶ 6, 104, 112, 151–154, Figs. 4–5, 9–17, 23–29).

g) Representative Claim Limitation (g)

Representative claim limitation (g) recites "the measurement device further comprising a receiver, the receiver having a plurality of spatially separated detectors." Citing Figure 1, Petitioner argues that Valencell-093 discloses a receiver having multiple optical detectors controlled by a processor. Pet. 36 (citing Ex. 1005 ¶¶ 7, 38, 107, Figs. 2, 9–11, 14, 15; Ex. 1003, Anthony Decl. ¶¶ 114–115). Petitioner notes that Valencell-093 discloses multiple emitters and detectors may be employed within a sensor module. *Id.* at 37–38 (citing Ex. 1005 ¶¶ 122, 130, Figs. 9A, 14). The Patent Owner's Preliminary Response does not dispute that Valencell-093 discloses representative claim limitation (g) and on the present record and

for the purposes of this Decision, we agree that Valencell-093 teaches this limitation.

h) Representative Claim Limitation (h)

Representative claim limitation (h) recites "[the receiver having] one or more analog to digital converters coupled to the spatially separated detectors, the one or more analog to digital converters configured to generate at least two receiver outputs." Petitioner notes that in Valencell-093 multiple physically spaced optical detectors may be used to provide signals for distinguishing motion related signals from physiological-related signals. Pet. 39–40 (citing Ex. 1005 ¶¶ 107–109, 148, Figs. 1, 2, 9A, 14). Petitioner further notes that each of the detectors' outputs may be sent to at least one analog-to-digital converter (ADC) to produce first and second digitized signals when the LEDs are "on" and "off," respectively, so that "each detector creates two output signals (on samples and off samples)." *Id.* at 40–41 (citing Ex. 1005 ¶¶ 33, 107, 108, 117, 122, 137, Figs. 9A, 18). The Patent Owner's Preliminary Response does not dispute that Valencell-093 discloses representative claim limitation (h) and on the present record and for the purposes of this Decision, we agree that Valencell-093 teaches this limitation.

i) Representative Claim Limitation (i)

Representative claim limitation (i) recites "[the receiver configured to] capture light while the LEDs are off and convert the captured light into a first signal and capture light while at least one of the LEDs is on and convert the captured light into a second signal, the captured light including at least a portion of the optical beam reflected from the tissue." Petitioner notes that in Valencell-093 a device can include multiple detectors that capture light when the LEDs are on and off and convert the captured light into first and

second energy response signals. Pet. 41–42 (citing Ex. 1005 ¶¶ 33, 108, 137, 148, Figs. 2, 9A, 14; Ex. 1003, Anthony Decl. ¶ 123–126). Petitioner's annotated version of Valencell-093's earbud monitor embodiment of Figure 9A is shown below.

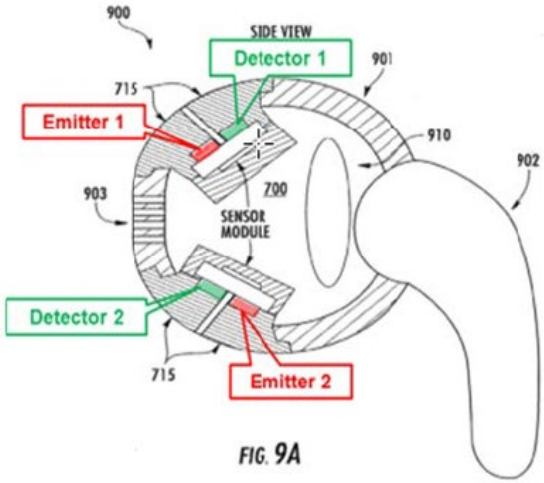

FIG. 9A

Pet. 41. Fig. 9A, as annotated, shows the earbud monitor with two detectors and two emitters. Petitioner argues "each Valencell-093 detector is configured to '*capture light*' when a near-infrared LED emitter is on and when all LEDs are off," and Valencell-093's receiver "'*convert[s] the captured light*' into first and second energy response signals." *Id*. (quoting Ex. 1005 ¶ 33; citing Ex. 1003 ¶ 123). Petitioner specifically maps the output of one detector, e.g., motion detector 104 or Detector 1 in annotated Figure 9A, as shown above, to the claimed at least two receiver outputs, which Petitioner identifies as outputs when the LEDs are "on" or "off." *Id*. at 40, 42. Petitioner also maps the set of "on" and "off" samples output from another detector, e.g., detectors 103 or Detector 2 in annotated Figure 9A, to the claimed first signal and second signal, respectively. *Id.* at 42. As Petitioner points out in Valencell-093, the optical signal detected represents optical absorption, transmission, luminance, or the like from a physiological

region targeted by the LED emitters, and the detectors capture at least some light from the emitters that is reflected by the tissue. *Id.* (citing Ex. 1005 ¶¶ 108–109, 117). The Patent Owner's Preliminary Response does not dispute that Valencell-093 discloses representative claim limitation (i) and on the present record and for the purposes of this Decision, we agree that Valencell-093 teaches this limitation.

j) Representative Claim Limitation (j)

Representative claim limitation (j) recites "the measurement device configured to improve a signal-to-noise ratio of the optical beam reflected from the tissue [by differencing the first signal and the second signal and] by differencing the two receiver outputs." Petitioner notes that in Valencell-093 "interference filter 106 'subtract[s]' ('*differencing*') 'temporally neighboring emitter-off samples' ('*the first signal'* and '*receiver output*') 'from temporally neighboring emitter-on samples' ('*the second signal*' and '*receiver output*') 'and output[s] a 'subtraction' signal for further processing.'" Pet. 43–44 (citing Ex.1005 ¶ 139, Figs. 19A, 19B; Ex.1003, ¶ 129). Further noting that the purpose of Valencell-093's differencing is to remove noise, Petitioner argues a person of ordinary skill would have understood removing noise from a detected signal increases the signal-to-noise ratio (SNR). *Id.*at 44 (citing Ex. 1005 ¶¶ 138, 145; Ex. 1003, Anthony Decl. ¶ 130). The Patent Owner's Preliminary Response does not dispute that Valencell-093 discloses representative claim limitation (i) and we agree that Valencell-093 teaches this limitation.

k) Representative Claim Limitation (k)

Representative claim limitation (k) recites "the measurement device configured to further improve the signal-to-noise ratio of the optical beam reflected from the tissue by increasing the light intensity relative to the

initial light intensity from at least one of the LEDs." Noting that Valencell-093 describes modulated energy as including energy that is emitted such that amplitude or intensity is varied, Petitioner cites Valencell-093's disclosure that "[t]he intensity of the *pulsed optical energy 110 is modulated* . . . such that the intensity is time-varying with at least two states, preferably an on state and an off state," and that the modulated light "may be pulsed partially on or partially off" or "*may be sinusoidal*." Pet. 44–45 (citing Ex. 1005 ¶¶ 108, 143). Petitioner argues that when the LED switches from partially on to partially off or through the peaks and troughs of a sinusoid, the light intensity is varied relative to an initial light intensity. *Id.* at 45 (citing Ex. 1003, Anthony Decl. ¶ 133).

Patent Owner cites the Board's prior decisions concerning the grandparent '040 patent and the parent '286 patent that "[a]lthough Valencell-093 discusses increasing the optical emitter intensity, it does not teach or suggest for any given wearable device an initial optical emitter intensity is increased from an initial light intensity to an increased intensity." Prelim. Resp. 25 (quoting Ex. 2013, 19 (denying institution of *inter partes* review of the '040 patent based on the combination of Valencell-093, Valencell-099, Hanna, and U.S. Patent No. 5,746, 206 to Mannheimer ("Mannheimer")); also citing Ex. 2011, 16–17 (denying institution of *inter partes* review of the '286 patent, based on Valencell-093, Hanna, and Mannheimer)). According to Patent Owner, Valencell-093 describes a design process that involves selecting an emitter whose intensity remains fixed during operation, but is of sufficient intensity to compensate for attenuation of optical scatter that may occur in an optical filter that attenuates unwanted sunlight. *Id.* at 27.

We agree with Patent Owner and the cited prior decisions. Valencell-093 recognizes the energy response signal collected by a wearable sensor module may be corrupted by sources of time-varying environmental interference, such as time-varying sunlight and artificial light, making it difficult to distinguish desired time-varying signals associated with time-varying physiological conditions. Ex. 1005 ¶ 110. To address these problems, Valencell-093 employs "novel filtering methods and novel optomechanical earbud designs." *Id.* ¶ 112. Further recognizing that the earth's atmosphere attenuates certain wavelengths, Valencell-093 states that a novel design approach is to "incorporate at least one optical emitter that generates optical wavelengths within at least one sunlight attenuation band combined with at least one bandpass-filtered optical detector, incorporating at least one optical bandpass filter to pass only wavelengths falling within this attenuation band." *Id.* ¶ 114.

Valencell-093 also recognizes that "[b]ecause sunlight is so powerful, it may be beneficial to reduce sunlight interference as much as possible, even if that means reducing the amount of optical scatter . . . of interest from the medium." *Id.* ¶ 123 (referencing Figure 1). Accordingly, "[t]o offset this unwanted reduction in optical scatter . . . , the intensity of the optical emitter 102 may be increased to increase the ratio of physiological optical scatter 111 from blood vessels with respect to unwanted sunlight." *Id.*

Representative claim limitation (k) recites that the measurement device "is configured to further improve the signal-to-noise ratio of the optical beam reflected from the tissue by increasing the light intensity relative to the initial light intensity." We understand claim limitation (k) to recite an increase in the light intensity during operation because the device is "configured" to change the light intensity by increasing it and because the

light intensity increase is relative to an initial intensity, i.e., the intensity at the commencement of operation. In contrast, Valencell-093 limits its description of modulating light intensity to the context of generating modulation states, e.g., on and off states, to provide first and second energy response signals. *Id.* ¶ 108.

We are not persuaded by Petitioner's contention that "Valencell-093 describes changing the LED intensity *while the device is in operation*." Pet. 44 (emphasis added). Although Valencell-093 parenthetically states "(In some cases, other optical interaction responses may be collected in other modulated states of the pulsed energy 110)," Valencell-093 does not discuss varying light intensity during operation to improve signal-to-noise ratio of the reflected optical beam, as recited in representative claim element (k). Ex. 1005 ¶ 108. Instead, Valencell-093 teaches improving performance by designing the light intensity to be set to a comparatively higher level in the narrow band of frequencies where filters reduce the effect of the relevant environmental noise, e.g., ambient sunlight. Even where Valencell-093 discloses modulating the emitted light to be partially on and partially off or sinusoidal, Valencell-093 does not describe varying the intensity of that light or the amplitude of the pulse or sinusoid during operation to improve signal-to-noise ratio of the reflected signal. *See* Ex. 1005 ¶ 143. Indeed, Valencell-093 suggests such partial on/off approaches are less desirable, stating "[a] benefit of complete on/off pulsing is that it may better-facilitate the signal processing methodologies outlined herein for attenuating environmental noise and motion-coupled environmental noise from one or more output signals." *Id.*

For this reason, on the present record and for the purposes of this Decision, we agree with Patent Owner that Valencell-093 does not disclose

representative claim limitation (k). Petitioner does not cite Bryars as teaching representative claim limitation (k).

As neither Valencell-093 nor Bryars discloses limitation (k), which is present in each of the independent claims, we are persuaded, as a preliminary matter, that Petitioner has not provided sufficient evidence to demonstrate a likelihood of success based on its challenges citing a combination of Valcell-093 and Bryars alone.

C. Claims 1, 5, 8, 9, 11, 13, 15, 16, 18 As Obvious Over Valencell-093, Bryars, and Lisogurski

Having preliminarily determined that Petitioner has demonstrated Valencell-093 teaches representative claim limitations (a)–(j), but not representative claim limitation (k), we focus our analysis of Petitioner's challenges based on the combination of Valencell-093, Bryars, and Lisogurski beginning with representative claim limitation (k).

1. *Independent claims 1, 18, 15*

a) Lisogurski

Lisogurski discloses a "physiological monitoring system [that] monitor[s] one or more physiological parameters of a patient . . . using one or more physiological sensors." Ex. 1011, 3:44–46. The physiological sensors may include a "pulse oximeter [that] non-invasively measure[s] the oxygen saturation of a patient's blood." *Id.* at 3:62–64. The pulse oximeter includes "a light sensor that is placed at a site on a patient, typically a fingertip, toe, forehead, or earlobe." *Id.* at 4:6–7. The light sensor "pass[es] light through blood perfused tissue and photoelectrically sense[s] the absorption of the light in the tissue." *Id.* at 4:8–10. The light sensor emits "one or more wavelengths [of light] that are attenuated by the blood in an amount representative of the blood constituent concentration," and may

include red and infrared (IR) wavelengths of light. *Id*. at 4:42–48. Figure 3 of Lisogurski is reproduced below.

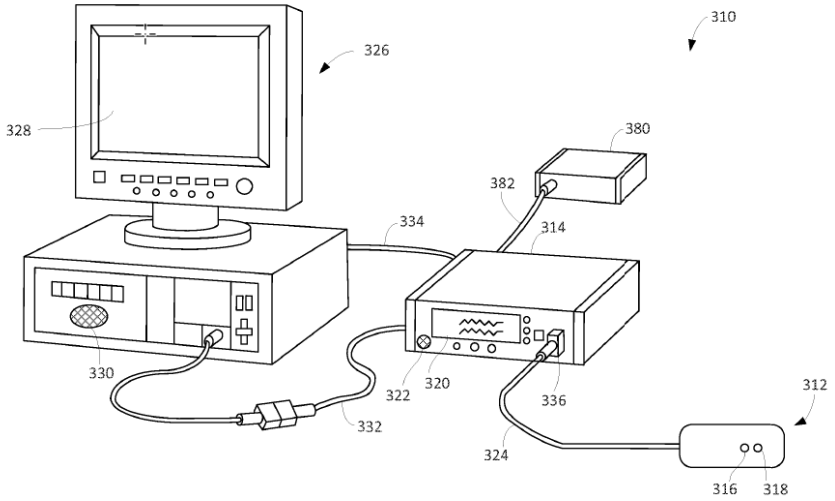

FIG. 3

Figure 3 of Lisogurski is "a perspective view of an embodiment of a physiological monitoring system." *Id*. at 2:23–25. The system includes sensor 312, monitor 314, and multi-parameter physiological monitor 326. *Id*. at 17:35–36, 18:44–45. Sensor 312 includes "one or more light source[s] 316 for emitting light at one or more wavelengths," and detector 318 for "detecting the light that is reflected by or has traveled through the subject's tissue." *Id*. at 17:37–42. Sensor 312 may have "[a]ny suitable configuration of light source 316 and detector 318," and "may include multiple light sources and detectors [that] may be spaced apart." *Id*. at 17:42–45. Light source 316 may include "LEDs of multiple wavelengths, for example a red LED and an IR [LED]." *Id*. at 19:25–27. Sensor 312 may be "wirelessly connected to monitor 314." *Id*. at 17:57–59.

Monitor 314 "calculate[s] physiological parameters based at least in part on data relating to light emission . . . received from one or more sensor

units such as sensor unit 312." *Id*. at 17:59–62. Monitor 314 includes "display 320 . . . to display the physiological parameters," and "speaker 322 to provide an audible . . . alarm in the event that a subject's physiological parameters are not within a predefined normal range." *Id*. at 18:3–10. Monitor 314 is "communicatively coupled to multi-parameter physiological monitor 326" ("MPPM 326") and "may communicate wirelessly" with MPPM 326. *Id*. at 18:58–61. Monitor 314 may also be "coupled to a network to enable the sharing of information with servers or other workstations." *Id*. at 18:62–65. Multi-parameter physiological monitor 326 may also "calculate physiological parameters and . . . provide a display 328 for information from monitor 314." *Id*. at 18:49–52. MPPM 326 may also be "coupled to a network to enable the sharing of information with servers or other workstations." *Id*. at 18:62–65. The remote network servers may also "be used to determine physiological parameters," and may display the parameters on a remote display, display 320 of monitor 314, or display 328 of MPPM 326. *Id*. at 20:53–58. The remote servers may also "publish the data to a server or website," or otherwise "make the parameters available to a user." *Id*. at 20:58–60. Lisogurski discloses that the monitoring system shown in Figure 3, described above, "may include one or more components of physiological monitoring system 100 of FIG. 1." *Id*. at 17:32–35. Lisogurski further discloses that although "the components of physiological monitoring system 100 . . . are shown and described as separate components. . . . the functionality of some of the components may be combined in a single component," and "the functionality of some of the components . . . may be divided over multiple components." *Id*. at 15:66–16:8. Figure 1 of Lisogurski is reproduced below.

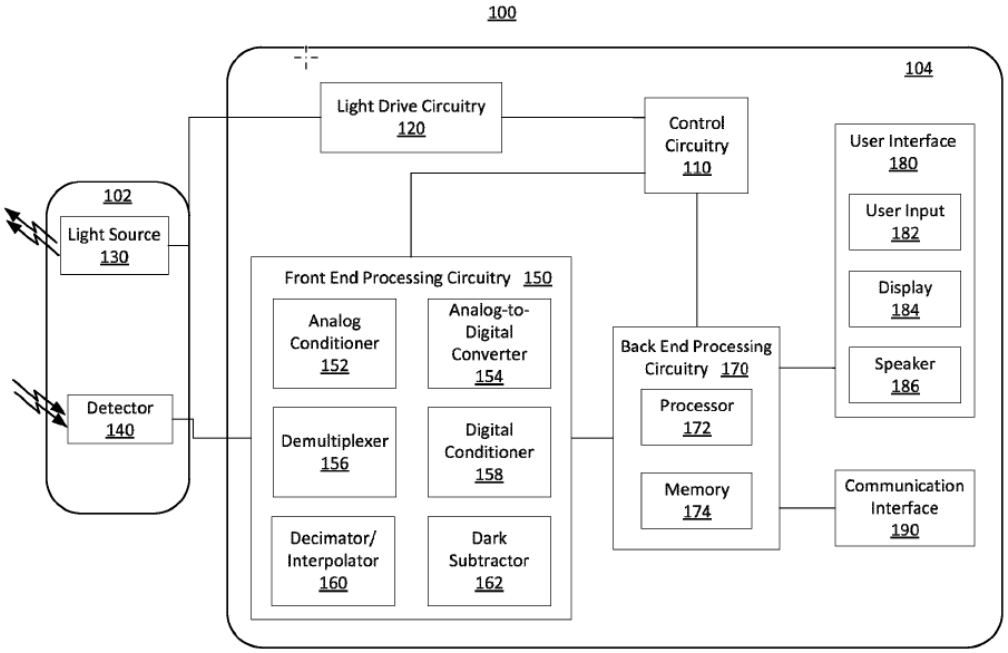

FIG. 1

Figure 1 of Lisogurski is a "block diagram of an illustrative physiological monitoring system." Ex. 1011, 2:11–13. The system includes "sensor 102 and a monitor 104 for generating and processing physiological signals of a subject." *Id*. at 10:44–46. Sensor 102 includes "light source 130 and detector 140." *Id*. at 10:48–49. Light source 130 includes "a Red light emitting light source and an IR light emitting light source," such as Red and IR emitting LEDs, with the IR LED emitting light with a "wavelength may be between about 800 nm and 1000 nm." *Id*. at 10:52–58. Detector 140 "detect[s] the intensity of light at the Red and IR wavelengths," converts them to an electrical signal, and "send[s] the detection signal to monitor 104, where the detection signal may be processed and physiological parameters may be determined." *Id*. at 11:9–10, 11:20–23. Monitor 104 includes user interface 180, communication interface 190, and control circuitry 110 for controlling (a) light drive circuitry 120, (b) front end processing circuitry 150, and (c) back end processing circuitry 170 via "timing control signals."

Id. at 11:33–38, Fig. 1. Light drive circuitry 120 "generate[s] a light drive signal . . . used to turn on and off the light source 130, based on the timing control signals." *Id*. at 11:38–40. The light drive signal "control[s] the intensity of light source 130 and the timing of when [the] light source 130 is turned on and off." *Id*. at 11:50–54. Front end processing circuitry 150 "receive[s] a detection signal from detector 140 and provide[s] one or more processed signals to back end processing circuitry 170." *Id*. at 12:42–45. Front end processing circuitry 150 also "synchronize[s] the operation of an analog-to-digital converter and a demultiplexer with the light drive signal based on the timing control signals." *Id*. at 11:43–46.

Back end processing circuitry 170 "use[s] the timing control signals to coordinate its operation with front end processing circuitry 150." *Id*. at 11:46–49. Back end processing circuitry 170 includes processor 172 and memory 174, and "receive[s] and process[es] physiological signals received from front end processing circuitry 150" in order to "determine one or more physiological parameters." Ex. 1011, 14:56–57, 14:60–64. Back end processing circuitry 170 is "communicatively coupled [to] user interface 180 and communication interface 190." *Id*. at 15:16–18. User interface 180 includes "user input 182, display 184, and speaker 186," and may include "a keyboard, a mouse, a touch screen, buttons, switches, [and] a microphone." *Id*. at 15:19–22. Communication interface 190 allows "monitor 104 to exchange information with external devices," and includes transmitters and receivers to allow wireless communications. *Id*. at 15:43–44, 15:48–57. Lisogurski teaches the physiological monitoring system may modulate the light drive signal to have a "period the same as or closely related to the period of [a] cardiac cycle." Ex. 1011, 25:49–51. Thus, "[t]he system may vary parameters related to the light drive signal including drive current or

light brightness, duty cycle, firing rate, . . . [and] other suitable parameters." *Id*. at 25:52–55. Lisogurski further teaches, "the system may alter the cardiac cycle modulation technique based on the level of noise, ambient light, [and] other suitable reasons." *Id.* at 9:46–48. Thus, "[t]he system may increase the brightness of the light sources in response to [any] noise to improve the signal-to-noise ratio." *Id.* at 9:50–52. The system may also "change from a modulated light output to a constant light output in response to noise, patient motion, or ambient light." *Id*. at 9:57–60.

b) Representative Claim Limitation (k)

i. Teachings in Lisogurski

Petitioner cites Lisogurski as disclosing a wearable optical sensor having LEDs and photodetectors to measure pulse rate and oxygen saturation. Pet. 62. Petitioner argues that Lisogurski teaches a light drive signal that regulates the current applied to the LEDs such that emitted light intensity increases with higher current, thereby improving signal-to-noise ratio in some circumstances. *Id.* at 62–63 (citing Ex. 1011, 7:13–16, 7:24–31, 9:46–60, 12:3–9, 12:16–22). As Petitioner points out, Lisogurski states that when a sensor receives "an increased level of background noise in the signal due to patient motion[,] [t]he system may *increase the brightness of the light sources* in response to the noise *to improve the signal-to-noise ratio*." *Id.* at 63–64 (quoting Ex. 1011, 9:46–52; citing Ex. 1011 37:6–22). Thus, Lisogurski teaches increasing the intensity or brightness of the LEDs during operation for the specific purpose of improving signal-to-noise ratio. Patent Owner does not argue that Lisogurski fails to disclose increasing the intensity of the LEDs during operation to improve the signal-to-noise ratio. Instead, Patent Owner argues that Petitioner has failed to articulate reasoning with rational underpinning explaining how or why a person of ordinary skill

in the art would have combined or modified the references to arrive at the claimed invention. Prelim. Resp. 39 (citing *KSR*, 550 U.S. at 418)

ii. Reasons to Combine

Noting that a skilled person engaged in an ordinary design process would consider known techniques and structures in analogous systems, Petitioner contends a person of ordinary skill would have had reason to combine the teaching of Valencell-093 and Lisogurski. Pet. 62–64 (citing Ex. 1003, Anthony Decl. ¶¶ 175, 177). Petitioner points out that one of the goals articulated in Valencell-093 is mitigation of time-varying environmental noise and that Valencell-093 discloses several techniques for reducing motion related noise. Pet. 64. Recognizing that Lisogurski teaches improving signal-to-noise ratio when a subject is in motion by increasing the brightness or intensity of the light source, Petitioner argues a person of ordinary skill would have had reason to apply Lisogurski's techniques in Valencell-093 to further mitigate motion related noise. *Id.*

Patent Owner does not argue that Lisogurski fails to disclose increasing the intensity of the LEDs during operation to improve signal-to-noise ratio. Instead, Patent Owner contends that Petitioner "in a conclusory fashion ignor[es] key complications with the proposed combination." Prelim. Resp. 38. According to Patent Owner, in a previous case, the Board determined changing the characteristic of an emitter would require adjusting or tuning of the receiver. *Id*. at 39 (citing Ex. 2015 (IPR2019-00913 Decision Denying Institution on challenges based on Valencell-093 in combination with Valencell-099, Mannheimer, and U.S. 2005/00049468 A1 by Carlson)). Patent Owner's receiver arguments are both incorrect, and taken out of context from proceedings that did not challenge any claims based on Lisogurski.

In IPR2019-00911 and IPR2019-00913, the Board found that selecting an increased intensity emitter at a design stage to compensate for attenuation of the reflected signal due to the placement of a fixed attenuation filter does not teach or suggest varying the intensity of the emitter in operation absent any evidence that the filter's attenuation can also be varied in operation. *See Apple Inc. v. Omni MedSci, Inc*., IPR2019-00913, Paper 14, 23–24 (PTAB, Oct. 16, 2019) (finding Valencell-093 teaches "*selecting* [at a design stage] an emitter 102 of sufficient intensity to compensate for the attenuation . . . by optical filter 710" rather than increasing emitter intensity in operation because "Valencell093 fails to teach that optical filter 710 has *variable* attenuation.") (emphasis added); *see also Apple Inc. v. Omni MedSci, Inc*., IPR2019-00911, Paper 13, 17 (PTAB, Nov. 6, 2019) (finding Valencell-093 teaches "a light source having increased light intensity to compensate for the attenuation of [an] attenuation filter" but does not teach that "the attenuation filter has a variable attenuation, and does not indicate that the intensity of the higher intensity light source can be varied to compensate for the variable attenuation of the attenuation filter.").

As discussed above, Lisogurski expressly teaches varying emitter intensity in operation to increase the signal-to-noise ratio in the presence of time-varying noise. *See* Ex. 1011, 9:50–52, 11:50–54 (teaching a "light drive signal may . . . control the intensity of light source 130" and "may increase the brightness of the light sources in response to the noise to improve the signal-to-noise ratio."). The Board has previously, and consistently, made this preliminary finding. *See Apple Inc. v. Omni MedSci, Inc*., IPR2019-00916, Paper 16, 29 (PTAB, Oct. 18, 2019); *see also Apple Inc. v. Omni MedSci, Inc*., IPR2019-00914, Paper 13, 30 (PTAB, Nov. 6, 2019).

As to attenuation, Valencell-093 teaches a

> novel design for rejecting sunlight interference may incorporate at least one optical emitter that generates optical wavelengths within at least one sunlight attenuation band combined with at least one bandpass-filtered optical detector, incorporating at least one optical bandpass filter to pass only wavelengths falling within this attenuation band.

Ex. 1005 ¶ 114. Thus, Valencell-093 teaches attenuating sunlight induced noise using filtering methods. Lisogurski also teaches passive or active filtering to reduce the effect of ambient light on the detection signal. Ex. 1011, 14:50–55. Thus, both Lisogurski and Valencell-093 teach attenuating ambient light noise to improve signal-to-noise ratio. Valencell-093 teaches increasing the brightness of the LED at the design stage to improve the signal-to-noise ratio in the presence of light filtering. Ex. 1005 ¶ 123. Lisogurski teaches increasing the brightness of the LED during operation for the same purpose, i.e., improving the signal to noise ratio. Ex. 1011, 9:50–57. Specifically, Lisogurski teaches increasing LED brightness in the presence of time-varying noise (e.g., due to patient motion) to increase the signal-to-noise ratio. *Id*. at 9:49–52. Valencell-093 also addresses the problem of "time-varying interference signal[s]" by using a "novel . . . interference filtering method." Ex. 1005 ¶¶ 111–112.

Petitioner suggests modifying Valencell-093 to increase signal-to-noise by increasing LED intensity not just during the design phase but during the operational phase (as taught by Lisogurski). *See* Pet. 62–64; *See also* Ex. 1011, 9:46–57. Petitioner articulates a rational reason to make the modification, and alleges the modification would achieve a predictable result. For example, relying on the testimony of its declarant, Petitioner argues that "Valencell-093 discloses several techniques for reducing motion-

related noise [and] a skilled person would have been motivated to look for additional techniques [like Lisogurski's] that could supplement Valencell-093's approach" and that the proposed modification is "nothing more than a predictable combination, using one technique for its known purpose, that could be done using routine engineering effort." *Id.* at 63–64 (citing Ex. 1003 ¶¶ 175–177). At this stage of the proceeding, this is a sufficient articulation of a reason to combine the teachings of Valencell-093 and Lisogurski.

In consideration of the above, on the present record and for the purposes of this Decision, we are persuaded Petitioner has demonstrated a person of ordinary skill would have had reason to incorporate the teachings of Lisogurski into Valencell-093 and the combination of these teachings discloses representative claim limitation (k).

c) Representative Claim Limitation (l)

Representative claim limitation (l) recites "the measurement device further configured to generate an output signal representing at least in part a non-invasive measurement on blood contained within the tissue." Petitioner notes that Valencell-093 teaches the output of interference filters shown in the implementation of Figure 1 reflects at least one physical property of the subject that may include blood oxygen level. Pet. 48–49 (citing Ex. 1005 ¶¶ 6, 7, 50, 90, 107–109, 112, 147–149). The Patent Owner's Preliminary Response does not dispute that Valencell-093 discloses representative claim limitation (l) and on the present record and for the purposes of this Decision, we agree that Valencell-093, Lisogurski, and Bryars in combination teach this limitation.

d) Representative Claim Limitation (m)

Representative claim limitation (m) recites "wherein the output signal is generated at least in part by using a Fourier transform of signals from the receiver including at least one of the first and second signals and signals from the at least two receiver outputs." Petitioner cites Valenell-093's disclosure that upon using outputs of interference filter 106 and motion detector 104, signal extraction filter 107 generates a "spectral representation of all signals in all detectors." Pet. 50–51(quoting Ex. 1005 ¶ 148). Petitioner notes that "[t]his includes the processed energy response signal that includes the "*first*" and "*second*" signals as well as the processed energy response signal that includes and was created by differencing the "*two receiver outputs*." *Id.* at 51 (citing Ex. 1003, Anthony Decl. ¶¶ 146–147). Petitioner contends a person of ordinary skill "reading Valencell-093 would have immediately envisioned use of a fast Fourier transform (FFT) as a technique for creating the spectral representations" because it is the most computationally efficient algorithm that could generate such spectral representations. *Id.* at 51–52 (citing Ex. 1003, Anthony Decl. ¶¶ 148–149). Petitioner further argues that to the extent Valencell-093 does not disclose a Fourier transform explicitly, a person of ordinary skill would have been motivated to use a Fourier transform on any of the signals to filter out unnecessary harmonics, such as background noise from the sun, to improve measurement accuracy of the signals of interest. *Id.* at 52–53 (citing Ex. 1003, Anthony Decl. ¶ 149–151).

Patent Owner acknowledges that "Valencell-093 discloses multiple spectral processing algorithms." Prelim. Resp. 36. For example, Patent Owner states Valencell-093 teaches motion-related signals can be identified by generating a spectral representation of all signals in all detectors,

identifying key frequencies in each signal, and subtracting, reducing, or removing all frequencies in common with each detector output. *Id.* at 36–37 (citing Ex. 1005 ¶ 148). However, despite this disclosure in Valencell-093, Patent Owner argues that Petitioner does not explain why or how a person of ordinary skill would have used Bryars's FFT with Valencell-093. *Id.* at 37–38.

We disagree. Petitioner provides two reasons why a person skilled in the art would have used an FFT algorithm to generate Valencell-093's spectral representations. First, acknowledging that "Valencell-093 does not explicitly disclose the algorithm used to generate a spectral representation," Petitioner argues that a person of ordinary skill would have looked for methods of generating such spectral representations. Pet. 53 (citing Ex. 1003, Anthony Decl. ¶ 154). As Petitioner points out, the use of Fourier transforms to generate spectral representations is well known to persons skilled in the art. *Id.* at 52 (citing Ex. 1019, 846–847 ("traditional method of frequency analysis [is] based on the Fourier transform…through the fast Fourier transform (FFT) algorithm.")). Second, Petitioner argues that Bryars teaches using an FFT to do spectral analysis of signals generated by a wearable device, and using Bryars's technique in Valencell-093 would have been a predictable use of a known technique to generate the requisite spectral representations. *Id.* at 53.

In consideration of the above, on the present record and for the purposes of this Decision, we are persuaded that Petitioner has demonstrated sufficiently that Valencell-093 and Bryars discloses claim limitation (m) to a person of ordinary skill and that such a person would have been motivated to combine the teachings of Bryars with the combined teachings of Valencel-093 and Lisogurski.

e) Representative Claim Limitation (n)

Representative claim limitation (n) recites "wherein the receiver further comprises one or more spectral filters positioned in front of at least some of the plurality of spatially separated detectors." Petitioner cites the description in Valencell-093 that optical filter 710 "covering the detector 103 is configured to block unwanted sunlight but still allow wavelengths from the optical emitter 102 to pass therethrough." Pet. 54 (citing Ex. 1005 ¶ 117). The Patent Owner's Preliminary Response does not dispute that Valencell-093 discloses representative claim limitation (l) and on the present record and for the purposes of this Decision, we agree that the combination of Valencell-093, Lisogurski and Bryars teaches this limitation.

f) Conclusion

In consideration of the above, on the present record and for the purposes of this Decision, we are persuaded Petitioner has demonstrated sufficiently that the combination of Valencell-093, Lisogurski, and Bryars teaches all the limitations of independent claims 1, 18, and 15.

2. *Claims 5, 13, and 18*

Claims 5, 13, and 18 depend from claims 1, 8, and 15, respectively, and recite that the receiver is configured to be synchronized to the modulation of the LEDs. We discuss claim 5 as representative. Petitioner cites Valencell-093 as teaching this limitation because the sample rate of Valencell-093's analog-to-digital converters is synchronized to the pulse rate of its LED emitters. Pet. 55 (citing Ex. 1005 ¶ 137) (stating "some samples 1920 represent signal 1911 from a detector with the emitter turned off and other samples 1930 represent signal 1911 from the detector with the emitter turned on").

As further evidence that Valencell-093 teaches synchronizing the receiver to the modulation of the LEDs, Petitioner notes Valencell-093 discloses groups of analog-to-digital samples, i.e. batches of data, may be selected using a time delay to match emitted pulses, e.g., to avoid aliasing of interfering harmonics from the physical condition monitored, such as heart rate. *Id.* at 56–57 (citing Ex. 1005 ¶¶ 137, 141; Ex. 1003, Anthony Decl. 160–161).

Petitioner further argues that Valencell-093 discloses the analog-to-digital converter selecting the sampling frequency according to well-known "Nyquist criteria for pulsing the emitter." *Id.* at 57 (citing Ex. 1005 ¶ 139; Ex. 1003, Anthony Decl. ¶ 162; Ex. 1060, 295, 533).

Patent Owner contends that Valencell-093 does not disclose configuring the receiver to be synchronized to the modulation of the LEDs, but instead "teach[es] at most a **fixed** sampling rate not tied to the modulation of the LEDs." Prelim. Resp. 31. According to Patent Owner, "[i]f the receiver were synchronized with the light source, the device would take a sample and would take a reading at the same point on the intensity curve 1911 every time the light source turned on, *i.e.*, the distance between a peak of signal 1911 and a pulse of sample 1910 would be the same," but this is not taught by Valencell-093. *Id.* at 32–33.

Patent Owner's arguments are not persuasive because claim 5 requires that the receiver be synchronized to the modulation of the LEDs recited in claim 1, not to the value of the physical parameter being measured. In Valencell-093, "digitized physiological sensor signal 1911," referenced by Patent Owner, is "generated by a detector, (e.g., 103, FIG. 1)," i.e., the device that detects the physiological parameter being measured. Ex. 1005 ¶ 137, Fig. 1. The vertical axis of Figures 19A and 19B is the "sensor signal

intensity" from the detector, and the horizontal axis represents time. *Id.* ¶ 137, Figs 19A, 19B. Figures 19A and 19B illustrate sampling "signal 1911 from the detector" such that among samples 1910 some samples 1920 represent detector signal 1911 taken when the emitter is off and some samples 1930 represent samples when the emitter is on. *Id.* The sensor signal intensity at any sampling time, as determined by the on and off times of the emitter, varies according to the amount of signal and noise actually present in the sampled signal at that time. Thus, in contrast to Patent Owner's assertions, a person skilled in the art would not expect "a peak of [detector] signal 1911 and a pulse of sample 1910 [to] be the same." Prelim. Resp. 32–33. Instead, such a person would expect the timing of peaks in detector signal 1911 to vary independently of the timing of sample pulses 1910, as shown in Figures 19A and 19B, because the physiological parameter being measured and noise in the detected signal vary independently of the detector's sampling rate and/or the emitter's pulsing rate.

Valencell-093 discloses selecting the emitter pulse rate based on Nyquist criteria appropriate to the physical parameter being measured. Ex. 1005 ¶ 139. In order to distinguish the measured parameter from noise, Valencell-093 teaches taking at least one sample when the emitter is on and at least one sample when the emitter is off. *Id.* ¶¶ 138–139. To do so, the optical receiver or detector must be synchronized to the pulsing of the emitter.

Consistent with applying in this proceeding the same construction applied by the District Court, Petitioner notes the court found "'modulating' light does not necessarily exclude pulsing the light or otherwise varying the amplitude of the light." Pet. 21 (citing Ex. 1057, 17). Thus, Valencell-093's

disclosure of synchronizing the analog-to-digital converters to obtain at least one sample when the emitter is pulsed on and at least one sample when the emitter is pulsed off is consistent with the limitation recited in claim 5. *See* Ex. 1005 ¶ 138, Fig. 18.

Patent Owner also argues that synchronizing the receiver to avoid antialiasing that may be caused by a physiological parameter, such as heartbeat, is not synchronizing the receiver to the modulation. Prelim. Resp. 32–33. Valencell-093 discloses that the modulation of the emitter is selected to accommodate antialiasing and the receiver is synchronized to the pulsing of the emitter, such that the receiver samples the reflected signal at least once each time the LED is pulsed off and at least once each time the LED is pulsed on. Ex. 1005 ¶¶ 138–140; Fig. 18 (1800, 1802).

In consideration of the above, on the present record and for the purposes of this Decision, we are persuaded Petitioner has demonstrated that the combination of Valencell-093, Lisogurski, and Bryars teaches the limitations of claims 5, 13, and 18.

3. *Claim 9 and 16*

Claims 9 and 16 depend from claims 8 and 15 respectively and recite at least one LED emitting at a first wavelength and a second LED emitting at a second wavelength wherein the first wavelength has a first penetration depth into the tissue and the second wavelength has a second penetration depth into the tissue different from the first penetration depth. Petitioner cites Valencell-093 as disclosing multiple optical emitters having different optical wavelengths, i.e., a "multi-wavelength reflection-mode pulse oximetry apparatus" in which some reflected wavelengths penetrate to deeper subcutaneous layers of a user's tissue and other reflected wavelengths penetrate to shallower dermis or epidermis layers. Pet. 57–59

(citing Ex. 1005 ¶¶ 54, 109, 130, Fig. 2). Petitioner notes Valencell-093's pulse oximeter implementation is consistent with known pulse oximetry principles that depend on using two wavelengths, e.g., red light and IR wavelengths, because blood and tissue absorb different wavelengths at different rates. *Id.* at 58–60 (citing Ex. 1003, Anthony Decl. ¶¶ 164, 167–169; Ex. 1019, 766, 769, 1347; Ex. 1028, 153–154, 394; Ex. 1034, 2550, 2552–2553). The Patent Owner's Preliminary Response does not dispute that Valencell-093 discloses the claim limitation recited in claims 9 and 16, and on the present record and for the purposes of this Decision, we agree that Valencell-093 teaches this limitation.

4. *Claim 11*

Claim 11 depends from claim 8 and recites the same limitation as representative claim limitation (i) discussed above. Pet. 62. For the same reasons, on the present record and for the purposes of this Decision, we are persuaded Petitioner has demonstrated that claim 11 is taught by Valencell-093.

5. *Conclusion*

In consideration of the above, we are persuaded Petitioner has demonstrated a reasonable likelihood it will succeed in its challenge to claims 1, 5, 8, 9, 11, 13, 15, 16, and 18 as obvious over Valencell-093, Bryars, and Lisogurski.

D. Claims 1, 5, 8, 9, 11, 13, 15, 16, 18 As Obvious Over Valencell-093, Bryars, and Hanna (with or without Lisogurski)

1. *Hanna*

Hanna discloses a pulse oximeter that is wearable on a user's earlobe, finger, or nasal septum to measure oxygen saturation or other properties of

blood. Ex. 1007, code (57), 1:33–39, 4:29–43. Hanna's oximeter includes multiple light sources, which may be LEDs, and one or more detectors, which detect the reflected light. *Id*. at 4:36–40, 4:66–5:1. Hanna discloses that the signals from the light sources or emitters "are modulated using different code sequences." *Id*. at 4:43–51, 6:12–23. This allows the determination of "the contributions of each of the sources" to the detected light. *Id*. at 6:19–23. It further facilitates "distinguishing the signals of interest from noise or other interference." *Id*. at 2:29–31.

2. *Representative Claim 1*

As this ground concerns modulating the LEDs, a limitation recited in all of the challenged claims, we address claim 1 as representative. To the extent that Patent Owner argues Valencell-093 and Bryars do not disclose modulating the LEDs to include information, as required by the District Court's claim construction, Petitioner cites Hanna's teaching of inserting LED identifying information in the form of code sequences embedded in the modulated light. Pet 64–66. Petitioner argues that Hanna achieves its stated objective of making signals more detectable in noise by using non-periodic codes to distinguish signals in the presence of periodic noise. *Id.* at 66–67 (citing Ex. 1007, 2:3–31, 2:59–62, 4:51–54). According to Petitioner, a skilled artisan would have recognized the desirability of noise removal as taught by Valencell-093, and would have turned to Hanna's coding technique in a similar device as a known way of improving noise removal. *Id.* at 67 (citing Ex. 1003, Anthony Decl. ¶¶ 184–186).

Patent Owner first argues the Petitioner fails on this ground for "lack of particularity" because the challenge is a "lumped ground" based on Valencell-093, Bryars, and Hanna with or without Lisogurski. Prelim. Resp. 46–47 (citing Ex. 2001, 3 (Best Practices and FAQs for Filing Requests for

Reexamination Compliant with 37 CFR 1.510 and 1.915, PTAB, May 2010)). Patent Owner's argument that the Petition is defective is unpersuasive. In this case, Petitioner presented and we addressed a challenge based on Valencell-093 and Bryars alone and a separate challenge based on Valencell-093, Lisogurski, and Bryars. Petitioner's reliance on Hanna in this ground presents a separate issue that is common to both grounds that can be addressed in a single analysis.

Patent Owner also notes that Petitioner does not reference Lisogurski in its discussion of this ground and argues that Petitioner does not explain how Valencell-093's emitter modified by Lisogurski would be compatible with Hanna. Prelim. Resp. 48–50. Patent Owner's argument is inconsistent with its earlier argument that "the independent claims recite '*modulating at least one of the LEDs*' and '*increasing the light intensity*' as separate and distinct claim limitations." *Id.* at 28. Petitioner relies on Hanna to disclose the separate and distinct limitation of "modulating at least one of the LEDs," not "increasing the light intensity . . . from at least one of the LEDs." *See*¸Pet. 64–68. Petitioner cites Hanna for teaching that modulating Valencell-093's LEDs with non-periodic codes is a known additional technique for distinguishing signals from noise that is independent of increasing the LED intensity to improve signal-to-noise ratio, as taught be Lisogurski. *See id.*

In consideration of the above, on the present record and for the purposes of this Decision, we are persuaded that Petitioner has shown that Hanna teaches the claimed modulation to the extent that issue is disputed and that a person of ordinary skill would have been motivated to combine the teachings of Hanna with those of Valencell-093. Therefore, we find that Petitioner has demonstrated a reasonable likelihood it will succeed on its

challenge of claims 1, 5, 8, 9, 11, 13, 15, 16, 18 based on the combination of Valencell-093, Bryars, Lisogurski, and Hanna.

E. Claim 12 As Obvious Over Valencell-093, Bryars, and Valencell-099 (with or without Lisogurski and/or Hanna)

1. *Valencell-099*

Valencell-099 also provides a wearable apparatus for monitoring a physiological condition of a subject. Ex. 1006, code (57), ¶¶ 5, 9, 50. Valencell-099's apparatus communicates health information to a portable telecommunication device, such as a smart phone, laptop computer, or other portable telemetric device for processing and display. *Id*. ¶¶ 18, 96, 97. This communication may be wireless. *Id*. at ¶ 98. The telecommunication device may also serve as a method of personal communication. *Id.*

2. *Claim 12*

Claim 12 depends from claim 8 and recites that the wearable device is configured to communicate wirelessly at least a portion of the output signal to a smart phone or tablet configured to process, store and display a portion of the output signal and that the smart phone or table has a wireless transmitter, receiver, display, voice input module, speaker, and touch screen. Petitioner cites Valencell-099 as teaching these features. Pet. 68–69. Based on Valencell-093's disclosure of the benefits of incorporating a physiological sensor into a Bluetooth headset, Petitioner contends that a person of ordinary skill would have looked to Valencell-099 for guidance on how a remote device could be used with the headset. *Id.* at 70–71. Petitioner further notes that Valencell-093, Bryars, Lisogurski, Hanna, and Valencell-099 concern analogous devices for measuring physiological parameters and that a person of ordinary skill would have had reason to combine the features of these devices in light of industry trends toward

creating wearable devices that can be used for mobile monitoring in fitness and sports applications. *Id.*

Noting Petitioner cites other sections of the Petition and numerous references, Patent Owner argues "Petitioner is inviting Patent Owner and the Board on a scavenger hunt through its repository of background information to find a rationale to combine the references in Lumped Ground # 4." Prelim. Resp. 50–52. Patent Owner's arguments are not persuasive. Petitioner's documentation of industry trends as supporting a rationale to combine employing a Bluetooth capable device, e.g., as described in Valencell-093, with a device that receives Bluetooth communications is sufficiently specific, at this stage in the proceeding, for purposes of demonstrating a person of ordinary skill would have reason to combine the teachings of the references.

For the reasons discussed above, we find that Petitioner has demonstrated a reasonable likelihood it will succeed at least on its challenge to claim 12 based on the combination of Valencell-099 with Valencell-093, Bryars, Lisogurski, with or without Hanna.

XI. ISSUES UNDER 35 U.S.C. §§ 314(a) AND 325(d)

A. Factual Background

Petitioner notes that the claims of the '546 patent were never rejected and were allowed pursuant to an Examiner amendment that added FFT and spectral filter limitations to as filed independent claims 1 and 9. Pet. 15 (citing Ex. 1002, 173–177).

On July 19, 2018, as a defendant in a case brought by Patent Owner alleging infringement of the parent '286 and grandparent '040 patents,

Petitioner filed an Answer and Counterclaim[11] identifying prior art including Lisogurski. Pet. 15; Ex. 2018. On July 30, 2018, Patent Owner filed a Request for Continued Examination (RCE) of the application that issued as the '546 patent; the RCE included an Information Disclosure Statement (IDS) identifying Lisogurski. *Id.* (citing Ex. 1002, 465, 468, 470). Petitioner notes that on August 8, 2018, the Examiner allowed the claims in the RCE without commenting on the reasons for allowance. *Id.* at 15–16 (citing Ex. 1002, 457–458). Petitioner then served its invalidity contentions in the litigation, identifying Bryars among the references.[12] *Id.* at 16. On September 11, 2018, Patent Owner filed a second RCE with two IDSs identifying over 60 references, including the references cited in Petitioner's invalidity contentions. *Id.* (citing Ex. 1002, 468–477, 480–418). On September 17, 2018, the Examiner again allowed the claims without discussing the references. *Id.* (citing Ex. 1002, 519).[13] An issue notification, mailed on September 26, 2018, indicated the application would issue as the '546 patent on October 16, 2018.

Patent Owner notes that Petitioner filed "multiple petitions directed to similar claims of related patents." Prelim. Resp. 19–20 (describing the First Petitions). Patent Owner emphasizes that in the First Petitions, "the Board found that Valencell-093 does not teach the Increasing Light Intensity

---

[11] The PACER database indicates Petitioner filed this Answer and Counterclaim in *Omni Medsci, Inc. v. Apple, Inc.*, Case 2:18-cv-00134-RWS (Dkt. Entry 38).
[12] Per the Court's Scheduling Order, Petitioner was required to serve its invalidity contentions by August 28, 2018. *See Omni Medsci, Inc. v. Apple, Inc.*, Case 2:18-cv-00134-RWS (Dkt. Entry 48)(Aug. 6, 2018).
[13] None of the IDSs filed by Patent Owner included remarks to draw the Examiner's attention to any particular reference.

During Operation limitations of" related patents, including the '040 and '533 patents. *Id.* at 20–21 (citing Ex. 2013, 21–24, dated October 17, 2019); Ex. 2015, 21–24, dated October 16, 2019). Patent Owner further notes that on October 17, 2019, the Board relied on Lisogurski to teach the Increasing Light Intensity During Operation Limitation and instituted *inter partes* review of the'040 grandparent patent in IPR2019-00917 (*see* Ex. 2014). Prelim. Resp. 22.

As previously discussed, Patent Owner sued Petitioner alleging infringement of the '546 patent on October 15, 2018 (one day before the October 16, 2018 issue date of the '546 patent) in the Eastern District of Texas, attaching the Issue Notification to its Complaint. On October 18, 2018, Patent Owner served its complaint on Petitioner (Prelim. Resp. 23), triggering October 18, 2019 as the statutory bar date. 35 U.S.C. § 315(b). Patent Owner notes that the bar date was one day after the Board entered its decisions in IPR2019-00910 finding Valencell-093 does not teach the Increasing Light Intensity During Operation limitation and in IPR2019-00917 finding Lisogurski does teach that limitation. Prelim. Resp. 22.

The subject Petition was filed on October 17, 2019 (Paper 3), i.e., the same day the Board both instituted and denied institution of *inter partes* review of the'040 grandparent patent based on whether the grounds included Lisogurski, as discussed above.

B. Analysis Under 35 U.S.C. § 325(d)

Petitioner contends we should not exercise discretion to deny institution under 35 U.S.C. § 325(d) because neither the Examiner nor Patent Owner addressed any of the teachings in the references in the IDSs that accompanied Patent Owner's RCEs. Pet. 16–17. Petitioner also notes the Examiner did not have Dr. Anthony's declaration, which provides additional

facts and evidence concerning the teachings of the references. *Id.* at 17. Petitioner adds that the subject Petition concerns a different patent and a different combination of the prior art with Valencell-093 than that asserted in IPR2019-00913, which denied institution of the related ’533 patent on October 16, 2019, i.e., the day before the Petition was filed. *Id.*; *see also* Ex. 2015.

Patent Owner argues that the Examiner considered the Lisogurski and Bryars references in its first RCE and considered Petitioner’s invalidity contentions in claim charts mapping Bryars and Lisogurski against claims of the ’286 parent patent, the ’040 grandparent patent, and the ’533 related patent in the second RCE. Prelim. Resp. 41. Patent Owner contends that Petitioner’s assertions in the Petition concerning the Increasing Light Intensity During Operation limitation are the same as those in the invalidity contentions considered by the Examiner. *Id* at 41–42.

Patent Owner notes the following considerations in assessing whether we exercise discretion under 325(d), as articulated in *Becton Dickinson & Co. v. B. Braun Melsungen*, IPR2017-01586 (Paper 8, 17–18) (PTAB Dec. 15, 2017),

> 1. the similarities and material differences between the asserted art and the prior art involved during examination;
>
> 2. the cumulative nature of the asserted art and the prior art evaluated during examination;
>
> 3. the extent to which the asserted art was evaluated during examination;
>
> 4. the extent of the overlap between the arguments made during examination and the manner in which a petitioner relies on the prior art or a patent owner distinguishes the prior art;
>
> 5. whether a petitioner has pointed out sufficiently how the Office erred in evaluating the asserted prior art; and

> 6. the extent to which additional evidence and facts presented in the petition warrant reconsideration of the prior art or arguments.

Prelim. Resp. 42–43. As to factors 1, 2, and 3, Patent Owner argues the Examiner considered all the IDS material and could not have overlooked Lisogurski and Bryars references. *Id.* at 43–44 (citing Ex. 1002, 454–460, 518–519, 524, 526). As to factor 4, Patent Owner emphasizes that the Petition cites Lisogurski for identical reasons as those considered by the Examiner. *Id.* at 44. As to factor 5, Patent Owner argues Petitioner does not explain how the Office erred. *Id.* As to factor 6, Patent Owner argues that Petitioner does not present additional evidence or facts beyond those considered by the Examiner. *Id.*

Under § 325(d) the Board uses the following two-part framework to determine whether to exercise its discretion to deny institution:

> (1) whether the same or substantially the same art previously was presented to the Office or whether the same of substantially the same arguments previously were presented to the Office; and
>
> (2) if either condition of the first part of the framework is satisfied, whether the petitioner has demonstrated that the Office erred in a manner material to the patentability of the challenged claims.

Advanced Bionics, LLC v. MED-EL Elektromedizinische Geräte GmbH, IPR2019-01469, Paper 6 at 8 (PTAB Feb. 13, 2020) (Decision Denying Institution) (Precedential). In this case, the Petition presents the same references that were considered by the Examiner. Thus, we move on to the second step of the framework, i.e., whether Petitioner has demonstrated the Office erred in a manner material to the patentability of the challenged claims. *See, id.* Examples of material error include misapprehending or overlooking teachings of the relevant prior art where those teachings impact

patentability of the challenged claims, and errors of law, such as misconstruing a claim, where the construction impacts the patentability of challenged claims. *Id.* fn. 9. Reflecting "a commitment to defer to previous Office evaluations of the evidence of record unless material error is shown," "[i]f reasonable minds can disagree regarding the purported treatment of the art or arguments, it cannot be said that the Office erred in a manner material to patentability" and "the Director generally will exercise discretion not to institute *inter partes* review." *Id.* at 9–10.

Petitioner contends the Examiner's statement that the prior art did not teach several limitations, including the amended claim limitations is incorrect. Pet. 15 (citing Ex. 1002, 177–180, 421–425). We agree with the Petitioner, and find that reasonable minds cannot disagree that the Office erred in a manner material to patentability in its treatment of the art by failing to reject the claims of the '546 patent over the references cited in Petitioner's challenges. The subject matter in Petitioner's invalidity contentions considered by the Examiner is explicit and reads directly on relevant claim limitations. Even Patent Owner has not, at this point, disputed in this proceeding that Lisogurski discloses the relevant limitation, i.e., increasing the brightness of the LEDs to improve the signal-to-noise ratio. Moreover, prior Board panels in IPR2019-00914, IPR2019-00916, and IPR2019-00917 have made preliminary findings that Lisogurski expressly teaches this limitation.

In consideration of the above, we decline to exercise discretion under Section 325(d).

C. Considerations Under 35 U.S.C. § 314(a)

Under § 314(a), the Director has discretion to deny institution. Petitioner contends we should not exercise discretion under § 314(a) to deny

institution. In deciding issues under § 314(a), we consider the following factors articulated in *General Plastic Co., Ltd. v. Canon Kabushiki Kaisha*, IPR2016-01357 (paper 19)(PTAB Ser. 16, 2017)(Precedential).

> 1. whether the same petitioner previously filed a petition directed to the same claims of the same patent;
>
> 2. whether at the time of filing of the first petition the petitioner knew of the prior art asserted in the second petition or should have known of it;
>
> 3. whether at the time of filing of the second petition the petitioner already received the patent owner's preliminary response to the first petition or received the Board's decision on whether to institute review in the first petition;
>
> 4. the length of time that elapsed between the time the petitioner learned of the prior art asserted in the second petition and the filing of the second petition;
>
> 5. whether the petitioner provides adequate explanation for the time elapsed between the filings of multiple petitions directed to the same claims of the same patent;
>
> 6. the finite resources of the Board; and
>
> 7. the requirement under 35 U.S.C. § 316(a)(11) to issue a final determination not later than 1 year after the date on which the Director notices institution of review.

Petitioner contends we should not exercise § 314(a) discretion in this case, noting that it filed its Petition within the statutory time period and that "the Petition's filing date is objectively reasonable." Pet. 18. Petitioner notes that the provisions of 35 U.S.C. § 311(c) precluded Petitioner from filing a Petition for *inter partes* review until July 16, 2019. *Id.* Petitioner further notes that, on August 16, 2019, the U.S. District Court for the Eastern District of Texas stayed Petitioner's suit and transferred the ligation to the U.S. District Court for the Northern District of California. *Id.* at 17. On October 17, 2019, the date Petitioner filed the Petition, a case conference

was not set to occur in the Northern District of California until December 16, 2019, no case schedule was in place and no trial date had been set. In view of these circumstances, we agree that Petitioner's filing on October 17, 2019 was reasonable.

Patent Owner argues we should exercise discretion to deny institution under § 314(a), noting that "[f]ollow-on petitions, targeting similar limitations in multiple patents belonging to the same family, does not differ from follow-on petitions of the same limitation in one patent." Prelim. Resp. 18 (citing *Trs. Of Columbia Univ. v. Symantec Corp.*, 811 F.3d 1359, 1369 (Fed. Cir. 2016) for the proposition that where multiple patents derive from the same patent application and share many common terms, the claims are interpreted consistently across all patents).

Although we agree that common terms in the claims of related patents should be treated consistently, we reject Patent Owner's characterization of the subject Petition as a "follow-on petition." *Id.* Even if one characterizes the '546 patent as a "follow-on patent" from the parent '286, grandparent '040, and related '533 patents, the claims of the '546 patent recite a unique combination of limitations. We do not foreclose Petitioner from challenging the unique claims of the '546 patent merely because Patent Owner incorporated into those unique claims one or more limitations that overlap the limitations of challenged claims in other related patents.

In view of the circumstances, we decline to exercise discretion under §314(a).

XII. CONCLUSION

Based on the evidence and arguments in the Petition and Preliminary Response discussed above[14], we are persuaded that Petitioner has demonstrated a reasonable likelihood that it will succeed on at least the following challenges to patentability:

Claims 1, 5, 8, 9, 11, 13, 15, 16, 18 as unpatentable as obvious under 35 U.S.C. § 103 over Valencell-093, Lisogurski, and Bryars;

Claims 1, 5, 8, 9, 11, 13, 15, 16, 18 as unpatentable as obvious under 35 U.S.C. § 103 over Valencell-093, Lisogurski, Bryars, and Hanna;

Claim 12 as unpatentable as obvious under 35 U.S.C. § 103 over Valencell-093, Bryars, Lisogurski and Valencell-099 (with or without Hanna).

Having determined that Petitioner has demonstrated a reasonable likelihood it will succeed on at least one of its challenges, we institute *inter partes* review of all challenged claims on all grounds. *SAS Inst.*, 138 S. Ct. at 1354–55.

XIII. ORDER

In consideration of the foregoing, it is hereby:

ORDERED that, pursuant to 35 U.S.C. § 314(a) an *inter partes* review of the ’546 Patent is hereby instituted, commencing on the entry date of this Order, and pursuant to 35 U.S.C. § 314(c) and 37 C.F.R. § 42.4, notice is hereby given of the institution of a trial.

FURTHER ORDERED that the trial is authorized on all grounds set forth in the Petition, in particular:

---

[14] Neither party addresses any objective or secondary considerations.

Claims 1, 5, 8, 9, 11, 13, 15, 16, 18 as unpatentable as obvious under 35 U.S.C. § 103 over Valencell-093 and Bryars;

Claims 1, 5, 8, 9, 11, 13, 15, 16, 18 as unpatentable as obvious under 35 U.S.C. § 103 over Valencell-093, Lisogurski, and Bryars;

Claims 1, 5, 8, 9, 11, 13, 15, 16, 18 as unpatentable as obvious under 35 U.S.C. § 103 over Valencell-093, Bryars, and Hanna (with or without Lisogurski);

Claim 12 as unpatentable as obvious under 35 U.S.C. § 103 as obvious over Valencell-093, Bryars, and Valencell-099 (with or without Lisogurski and Hanna); and

FURTHER ORDERED that the trial will be conducted in accordance with the accompanying Scheduling Order. In the event that an initial conference call has been requested or scheduled, the parties are directed to the Office Trial Practice Guide, 77 Fed. Reg. 48756, 48765–66 (Aug. 14, 2012), for guidance in preparing for the initial conference call, and should come prepared to discuss any proposed changes to the scheduling order entered herewith and any motions the parties anticipate filing during the trial.

FOR PETITIONER:

Jeffrey Kushan
Ching-Lee Fukuda
Thomas Broughan
jkushan@sidley.com
clfukuda@sidley.com
tbroughan@sidley.com

FOR PATENT OWNER:

Thomas Lewry
John LeRoy
Robert Tuttle
John Halan
Christopher Smith
Andrew Turner
tlewry@brookskushman.com
jleroy@brookskushman.com
rtuttle@brookskushman.com
jhalan@brookskushman.com
csmith@brookskushman.com
aturner@brookskushman.com