UNITED STATES PATENT AND TRADEMARK OFFICE

BEFORE THE PATENT TRIAL AND APPEAL BOARD

SAMSUNG ELECTRONICS CO., LTD., SAMSUNG ELECTRONICS AMERICA, INC., FOSSIL GROUP, INC., FOSSIL STORES I, INC., FOSSIL PARTNERS, L.P., OURA HEALTH OY, AND ONEPLUS TECHNOLOGY (SHENZHEN) CO., LTD.,

Petitioners,

v.

OMNI MEDSCI, INC.,

Patent Owner.

U.S. Patent No. 11,160,455

Case No. IPR2025-01252

DECLARATION OF IGOR EFIMOV, PH.D.

TABLE OF CONTENTS

Page

I. BACKGROUND AND QUALIFICATIONS 2
II. MATERIALS CONSIDERED 11
III. LEGAL STANDARDS 17
A. Level of Ordinary Skill in the Art 18
B. Claim Construction 18
C. Anticipation 20
D. Obviousness 21
E. Dependent Claims 25
IV. LEVEL OF SKILL IN THE ART 26
V. OVERVIEW OF THE ’455 PATENT 27
VI. PROSECUTION HISTORY OF THE ’455 PATENT 29
VII. CHALLENGED CLAIMS 30
VIII. CLAIM CONSTRUCTION 35
A. Prior Constructions of the Board 36
IX. OVERVIEW OF ASSERTED GROUNDS AND REFERENCES IN THE PETITION 37
A. Petitioners’ Obviousness Grounds 37
B. Summary of Asserted References 37
1. Lisogurski (Ex 38
2. LeBoeuf (Ex 40
3. Tran (Ex 42
4. Carlson (Ex 42
X. OPINIONS ON GROUNDS IN THE PETITION 44
A. Ground 1: Obviousness Based on Lisogurski (Claims 1, 8, and 11) 46
1. Independent Claim 1 47
2. Independent Claim 8 82
3. Dependent Claim 11 91

Omni MedSci Ex. 2118
Samsung Electronics Co. Ltd., et al., v. Omni MedSci - IPR2025-01252

B. Ground 2: Obviousness Based on Lisogurski and LeBoeuf (Claims 2-4, 9-10, and 15-17) 97
1. Dependent Claim 2 97
2. Dependent Claims 3-4 132
3. Dependent Claim 9 134
4. Dependent Claim 10 135
5. Independent Claim 15 136
6. Dependent Claim 16 139
7. Dependent Claim 17 140
C. Ground 3: Obviousness Based on Lisogurski and Tran (Claims 1, 8, 12, and 15) 170
1. Independent Claims 1, 8, 15 170
2. Dependent Claim 12 171
D. Ground 4: Obviousness Based on Lisogurski, LeBoeuf, and Tran (Claims 5-7, 13-14, and 18-20) 172
1. Dependent Claim 5 173
2. Dependent Claim 6 174
3. Dependent Claim 7 175
4. Dependent Claim 13 176
5. Dependent Claim 14 178
6. Dependent Claims 18-20 179
E. Ground 5: Obviousness Based on Lisogurski and Carlson (Claims 1, 8, and 11) 180
F. Ground 6: Obviousness Based on Lisogurski, LeBoeuf, and Carlson (Claims 2-4, 9-10, and 15-17) 181
G. Ground 7: Obviousness Based on Lisogurski, Tran, and Carlson (Claims 1, 8, 12, and 15) 182
H. Ground 8: Obviousness Based on Lisogurski, LeBoeuf, Tran, and Carlson (Claims 5-7, 13-14, and 18-20) 183
XI. CONCLUSION 203

Omni MedSci Ex. 2118
Samsung Electronics Co. Ltd., et al., v. Omni MedSci - IPR2025-01252

I, Igor Efimov, declare as follows:

1. I make this declaration based upon my own personal knowledge and, if called upon to testify, would testify competently to the matters stated herein.

2. I have been retained on behalf of Omni MedSci, Inc., ("Omni" or "Patent Owner") as an independent expert to provide this declaration concerning the technical subject matter relevant to U.S. Patent No. 11,160,455 ("the '455 Patent") (Ex. 1001) in connection with an *inter partes* review ("IPR") petition filed by Samsung Electronics Co. Ltd., Samsung Electronics America Inc., Fossil Group, Inc., Fossil Stores I, Inc., Fossil Partners, L.P., Oura Health Oy, and OnePlus Technology (Shenzhen) Co., Ltd. ("Petitioners").

3. I am being compensated at my standard hourly rate of $700 per hour for the time I spend on this matter. My compensation is not based on the content of my opinions or the resolution of this matter, and I have no financial or other interest in this proceeding.

4. I understand that Omni is asserting the '455 Patent against Samsung Electronics Co., Ltd., and others, in a related matter currently pending in the United States District Court for the Eastern District of Texas (the "Texas Case").

5. I also understand that Omni is asserting the '455 Patent against Whoop, Inc., in a related matter currently pending in the United States District Court for the District of Delaware ("the Delaware Case").

Omni MedSci Ex. 2118
Samsung Electronics Co. Ltd., et al., v. Omni MedSci - IPR2025-01252

6. In this declaration, I offer opinions relating to the ’455 Patent, claim construction, the references in the Petition, and the declaration of Petitioners’ expert Dr. Anthony. The substance and bases of my opinions appear below.

I. BACKGROUND AND QUALIFICATIONS

7. In formulating my opinions, I have relied on my knowledge, training, and experience in the relevant field, which I will summarize briefly herein.

8. I am currently a Professor of Biomedical Engineering and a Professor of Medicine (Division of Cardiology) at Northwestern University, Chicago, Illinois. Prior to my tenure at Northwestern University, I was the Alisann and Terry Collins Professor of Biomedical Engineering at The George Washington University, Washington, D.C., where I also served as Founding Chair of the Department of Biomedical Engineering from 2015 to 2019. Before that, from 2004 to 2015, I served as the Lucy & Stanley Lopata Distinguished Professor of Biomedical Engineering at Washington University in Saint Louis, Missouri. I was also a Professor of Medicine, Professor of Radiology, and Professor of Cell Biology & Physiology at the Washington University School of Medicine. I also served on the faculty of the Department of Cardiology of the Cleveland Clinic Foundation (1994-2000) and the Department of Biomedical Engineering of Case Western Reserve University (2000-2004), Cleveland, Ohio.

Omni MedSci Ex. 2118
Samsung Electronics Co. Ltd., et al., v. Omni MedSci - IPR2025-01252

9. My research focuses on the physiological mechanisms of cardiovascular disease and the development of diagnostic and therapeutic bioelectronics for heart rhythm disorders, heart failure, and vascular dysfunction. My laboratory develops implantable, wearable, and optical sensing and imaging systems for real-time physiological diagnostics and device-based therapy. These systems incorporate semiconductor light sources, photodiodes, and spectroscopic analysis.

10. I received my Master of Science degree in experimental nuclear physics from the Moscow Institute of Physics and Technology, USSR, in 1986. In 1992, I received a Ph.D. in Biophysics from the Moscow Institute of Physics and Technology after completing a doctoral study on the mechanisms of sudden cardiac death due to ventricular arrhythmias. I completed my postdoctoral training in 1992-1994 in the fields of fast fluorescent imaging / optical mapping, cardiac electrophysiology, and arrhythmia at the University of Pittsburgh in Pittsburgh, Pennsylvania. Then, I started my independent cardiac research career in the Department of Cardiology at the Cleveland Clinic Foundation (1994-2000), where I established an NIH-funded laboratory. Cleveland Clinic has been consistently ranked the #1 Cardiology program nationwide by U.S. News & World Report since 1994.

Omni MedSci Ex. 2118
Samsung Electronics Co. Ltd., et al., v. Omni MedSci - IPR2025-01252

11. For the past 25 years, I have taught undergraduate and graduate courses in Biomedical Engineering, including courses relating to quantitative physiology, applied bioelectricity, biomedical optics, biosignal acquisition and analysis, light-tissue interaction, physiology of the heart, introduction to biomedical engineering, clinical cardiovascular engineering, and cardiovascular engineering and technology. In these and other courses, I taught sections on engineering and physiological principles of cardiac electrophysiology, arrhythmia, and electrocardiography. Many of my trainees are currently working at leading national medical device companies, including Medtronic, Abbott, and Boston Scientific, developing novel cardiac antiarrhythmic therapies, diagnostics, and sensing devices.

12. I have also mentored over 30 clinical fellows and postdoctoral research fellows, many of whom are currently professors, cardiologists, cardiac and vascular surgeons, and clinical engineers throughout the national and world Universities and hospitals, including Harvard University, MA; University of California, CA; Ohio State University, OH; University of Wisconsin, WI; University of Fukuoka, Japan; University of Bordeaux, France; University of Brno, Czech Republic; Imperial College London, UK; etc.

13. I have published a book in 2009 on cardiac bioelectric diagnostics and therapy (Efimov I.R., Kroll, M.W., Tchou, P.J., Eds., Cardiac Bioelectric Therapy: Mechanisms and Practical Implications, Springer, 2009. ISBN 978-0-387-79402- 0),

Omni MedSci Ex. 2118
Samsung Electronics Co. Ltd., et al., v. Omni MedSci - IPR2025-01252

and I have published a second updated edition of this book in 2021 (Efimov I.R., Ng F.S., Laughner J.I., Eds., Cardiac Bioelectric Therapy: Mechanisms and Practical Implications, Springer, 2nd Edition. 2021. ISBN 978-3-030-63354-7). These volumes address optical imaging technology and electrophysiological principles of diagnosis and therapy, providing novel approaches to the treatment of cardiac arrhythmias using implantable devices, percutaneous ablation therapies, machine learning, and other approaches.

14. Most of my 300+ peer-reviewed publications focus on cardiac electrophysiology, biomedical optics, device development, the physiological mechanisms of cardiac arrhythmias, and their diagnostics and therapy. In collaboration with Professor John A. Rogers from Northwestern University, we have developed a novel implantable, interventional, and wearable electronics platform for monitoring cardiac electrophysiology, optical image mapping, diagnosis of heart rhythm disorders due to brady- and tachyarrhythmias, and antiarrhythmic therapy. Several high-impact publications have been published on that subject recently in leading scientific journals. For example, our recent paper on novel bioresorbable electronics platform (Choi YS, Yin RT, Pfenniger A, Koo H, Avila R, Lee KB, Chen SW, Lee G, Li G, Qiao Y, Murillo-Berlioz A, Kiss A, Han S, Lee SM, Li C, Xie Z, Chen YY, Burrell A, Geist B, Jeong H, Kim J, Yoon HJ, Banks A, Kang SK, Zhang ZJ, Haney CR, Sahakian AV, Johnson D, Efimova T, Huang Y, Trachiotis GD,

Omni MedSci Ex. 2118
Samsung Electronics Co. Ltd., et al., v. Omni MedSci - IPR2025-01252

Knight BP, Arora RK, Efimov IR, Rogers JA. Fully implantable and bioresorbable cardiac pacemakers without leads or batteries. Nature Biotechnology, June 28, 2021, https://doi.org/10.1038/s41587-021-00948-x.) was featured by over 150 international news outlets reaching at least 12 million listeners/viewers from 5 continents, including PBS, Guardian, and NIH Research Matters (NIH Director's office online publication).

15. Another 2025 publication in Nature (Zhang Y, Rytkin E, Zeng L, Kim JU, Tang L, Zhang H, Mikhailov A, Zhao K, Wang Y, Ding L, Lu X, Lantsova A, Aprea E, Jiang G, Li SG Seo, Wang T, Wang J, Liu J, Gu J, Liu F, Bailey K, L YFL, Burrell A, Pfenniger A, Ardashev A, Yang T, Liu N, Lyu Z, Purwanto NS, Ying Y, Lu Y, Hoepfner C, Melisova A, Gong J, Jeong J, Choi J, Hou A, Nolander R, Bai W, Jin SH, Ma Z, Torkelson JM, Huang Y, Ouyang W, Arora RK, Efimov IR, Rogers JA. Millimetre-scale, bioresorbable optoelectronic systems for electrotherapy. Nature, 2025, 640 (8057), 77-86.) was recognized among the Best Inventions of 2025 by Time magazine.

16. I have also delivered 400+ invited lectures at prestigious professional conferences and leading Universities worldwide, most of them on biomedical imaging, semiconductor-based light emission, optical coupling through tissue, wireless control architectures, cardiac arrhythmias, and therapy. On 2025/11/09 I presented at the annual sessions of the American Heart Association "New sensors

Omni MedSci Ex. 2118
Samsung Electronics Co. Ltd., et al., v. Omni MedSci - IPR2025-01252

for the future: bringing dreams to reality." Other presentations in 2025 included "Millimeter-scale Bioresorbable Stimulator (milli-pacemaker)", European Section Meeting of the International Academy of Cardiovascular Sciences. Prague, Czechia, 2025/11/04; "Millimeter-scale Bioresorbable Stimulator", RASA Europe conference, Berlin, Germany, 2025/11/1; "Cardiovascular Conformal Bioresorbable Devices", Abbott, 2025/10/21; "Heart-AI interface: Soft Bioresorbable Devices", Cardiology Grand Rounds, University of Rochester Medical Center, Rochester, NY, 2025/09/10; "Heart-AI interface: novel bioelectronic therapy for heart rhythm disorders", Department of Internal Medicine Grand Rounds at the University of Iowa Carver College of Medicine, Iowa City, IA, 2025/09/04; "Bioelectronics for Neurocardiology: Leducq Foundation Update", Lyric, University of Bordeaux, France, 2025/08/27; "Bioresorbable transient electronics", Abbott, 2025/06/16; "Bioresorbable transient electronics", Heart Rhythm Society, San Diego, CA, 2025/04/27; "Bioresorbable milli-pacemaker: transient arrhythmia therapy", Ralph Lazarra Lecture Award, Heart Rhythm Society, San Diego, CA, 2025/04/24; "Selective p38γ silencing by rationally designed siRNA for mitigating anthracycline cardiotoxicity", Lurie Cancer Center, Feinberg School of Medicine, Northwestern University, Chicago, IL, 2025/04/22; "Transient bioelectronics for cardiovascular tissue engineering and medicine", Department of Biomedical Engineering, University of Alabama at Birmingham, AL, 2025/04/18; "Cardiac bioelectronics for

Omni MedSci Ex. 2118
Samsung Electronics Co. Ltd., et al., v. Omni MedSci - IPR2025-01252

heart rhythm disorders", Leiden University Medical Center, Leiden, Netherlands, 2025/01/21.

17. In 2021-2025, I served as Editor-in-Chief of Cardiovascular Engineering and Technology, a journal of the Biomedical Engineering Society published by Springer Nature. I was responsible for reviewing and decision-making of approximately 250-300 manuscripts submitted for publication, including biomedical imaging mapping, cardiac electrophysiology, signal processing, arrhythmia therapy, etc.

18. I have served on the editorial board of the American Journal of Physiology: Heart and Circulatory Physiology and Heart Rhythm Journal, where I manage and make decisions on manuscripts related to biomedical sensing and imaging, cardiac electrophysiology and electrotherapy. I have served or currently am serving on many editorial boards of other leading cardiac journals, where I review papers on biomedical imaging technique, cardiac electrophysiology and arrhythmia. These journals include Circulation Research, Heart Rhythm, Journal of Cardiac Electrophysiology, Journal of Molecular and Cellular Cardiology, American Journal of Physiology, IEEE Transactions in Biomedical Engineering, Experimental Physiology, etc. I regularly review papers on biomedical imaging, cardiovascular physiology and arrhythmia for Nature, Science, Proceedings of the National Academy of Science, Circulation, and other leading journals.

Omni MedSci Ex. 2118
Samsung Electronics Co. Ltd., et al., v. Omni MedSci - IPR2025-01252

19. I have served on numerous national and international expert panels, which consider grant applications from the leading experts in the field of biomedical optics, diagnostic sensing, cardiac electrophysiology, and defibrillation from many countries, including the USA, the European Union, Canada, the UK, France, Switzerland, Germany, the Netherlands, Russia, Australia, New Zealand, South Africa, Singapore, etc. From 2009-2013, I served as a chartered member of the leading US panel at the National Institutes of Health, the Electrical Signaling, Transporters and Arrhythmia (ESTA) Study section, which is the major funding source for leading US bioinstrumentation investigators. I have also served on many international panels that consider policy, research, and funding decisions in the field of biomedical sensing, cardiac electrophysiology and therapy in numerous countries from most continents. For example, I served on The Expert Panel on the Medical and Physiological Impacts of Conducted Energy Weapons, the Council of Canadian Academies.

20. My research on biomedical imaging and electronics has been funded by the National Heart, Lung, and Blood Institute of the National Institutes of Health and other federal and private foundations without interruptions since 1998, with an average of approximately $1M per year during recent years. I am also funded by the American Heart Association, National Science Foundation, Leducq Foundation, etc.

Omni MedSci Ex. 2118
Samsung Electronics Co. Ltd., et al., v. Omni MedSci - IPR2025-01252

21. I have been designing and developing medical devices and diagnostic systems for more than twenty-five years. My inventions and patent portfolio include methods for low-voltage cardiac defibrillation, optical and electrical biosensors, cardiac and neural stimulators, and hybrid optoelectronic systems for tissue monitoring and physiological diagnostics. Many of these devices integrate semiconductor light sources, photodetectors, and optical mapping technologies. For example, I am the inventor or co-inventor on several patents and patent applications, including "Systems and Methods for Triple-Parametric Optical Mapping" (U.S. Pat. App. Pub. No. 2023/0085578), "Distributed Neuromorphic Computing for High-Definition Bioelectric Diagnostics and Therapy" (U.S. Patent No. 11,701,002), and "High-Resolution Multi-Function and Conformal Electronics Device for Diagnosis and Treatment of Cardiac Arrhythmias" (PCT/US18/16499). With the support of NIH funding, I have invented a method for low-voltage defibrillation of cardiac arrhythmias by effectively unpinning anatomical reentry (U.S. Patent No. 8,175,702), a method for cardiac pacing using the inferior nodal extension (U.S. Patent No. 8,391,995), and a method and device for low-energy termination of atrial tachyarrhythmias (U.S. Patent No. 8,509,889). I founded Cardialen, Inc. to develop clinical defibrillators based on this method, which received over $30M in venture and NIH funding. Cardialen was acquired in 2022.

Omni MedSci Ex. 2118
Samsung Electronics Co. Ltd., et al., v. Omni MedSci - IPR2025-01252

22. I have received many awards in recognition of my research and innovation in the field of bioengineering and diagnostic device development. For example, I was elected to the United States National Academy of Inventors in 2019; and I have received the 2021 Distinguished Scientist Award and the 2025 Ralph Lazzara Lectureship Award from the leading clinical cardiac electrophysiology professional association – the Heart Rhythm Society. In 2025, I was elected to the American Academy of Sciences and Letters.

23. A more detailed listing of my credentials is set forth in my curriculum vitae (Ex. 2044).

II. MATERIALS CONSIDERED

24. In forming the opinions set forth herein, I have considered and relied upon my education, knowledge of the relevant field, and my experience. I have also reviewed and considered the ’455 Patent (Ex. 1001) and the ’455 Patent’s file history (Ex. 1002), and at least the following additional materials.

- Petition for *Inter Partes* Review of the ’455 Patent (Paper 1) (“Petition”);
- Declaration of Brian Anthony in Support of Petition for *Inter Partes* Review of U.S. Patent No. 11,160,455 (Ex. 1003);

Omni MedSci Ex. 2118
Samsung Electronics Co. Ltd., et al., v. Omni MedSci - IPR2025-01252

- Previous Declaration of Brian Anthony in Support of Petition for *Inter Partes* Review of U.S. Patent No. 9,651,533 submitted in IPR2019-00916 (Ex. 1004);
- Petition in *Apple Inc. v. Omni Medsci, Inc.*, IPR2019-00916, Paper 1 (PTAB Apr. 10, 2019) (Ex. 1005);
- Patent Owner Response in *Apple Inc. v. Omni Medsci, Inc.*, IPR2019-00916, Paper 23 (PTAB Jan. 31, 2020) (Ex. 1006);
- Institution Decision in *Apple Inc. v. Omni Medsci, Inc.*, IPR2019-00916, Paper 16 (PTAB Oct. 18, 2019) (Ex. 1007);
- Final Written Decision in *Apple Inc. v. Omni Medsci, Inc.*, IPR2019-00916, Paper 39 (PTAB Oct. 14, 2020) ("'533-FWD") (Ex. 1008);
- *Omni MedSci, Inc. v. Apple Inc.*, No. 21-01229, ECF 69 (Fed. Cir. June 8, 2022) (Ex. 1009);
- Previous Declaration of Brian Anthony in Support of Petition for *Inter Partes Review* of U.S. Patent No. 10,517,484 submitted in IPR2021-00453 (Ex. 1010);
- Petition in *Apple Inc. v. Omni Medsci, Inc.*, IPR2021-00453, Paper 1 (PTAB Jan. 22, 2021) (Ex. 1011);

Omni MedSci Ex. 2118
Samsung Electronics Co. Ltd., et al., v. Omni MedSci - IPR2025-01252

- Patent Owner Response in *Apple Inc. v. Omni Medsci, Inc.*, IPR2021-00453, Paper 10 (PTAB Nov. 12, 2021) (Ex. 1012);
- Institution Decision in *Apple Inc. v. Omni Medsci, Inc.*, IPR2021-00453, Paper 7 (PTAB Aug. 6, 2021) (Ex. 1013);
- Petitioner Reply in *Apple Inc. v. Omni Medsci, Inc.*, IPR2021-00453, Paper 11 (PTAB Feb. 4, 2022) (Ex. 1014);
- Final Written Decision in *Apple Inc. v. Omni Medsci, Inc.*, IPR2021-00453, Paper 22 (PTAB Aug. 3, 2022) ("'484-FWD") (Ex. 1015);
- Final Written Decision on Remand in *Apple Inc. v. Omni Medsci, Inc.*, IPR2021-00453, Paper 26 (PTAB Feb. 14, 2025) (Ex. 1016);
- *Apple Inc. v. Omni MedSci, Inc.*, No. 23-01034, ECF 44 (Fed. Cir. June 21, 2024) (Ex. 1017);
- *Omni MedSci, Inc. v. Apple Inc.*, 2:18-cv-00134-RWS, Dkt. No. 211 (E.D. Tex. June 24, 2019) (Ex. 1018);
- *Omni MedSci, Inc. v. Apple Inc.*, 2:18-cv-00429-RWS, Dkt. No. 152 (E.D. Tex. Aug. 14, 2019) (Ex. 1019);
- Second Amended Docket Control Order, June 16, 2025. *Omni MedSci, Inc. v. Samsung Electronics Co., Ltd. et al.*, No. 2:24-cv01070-JRG-RSP (E.D. Tex.) (Ex. 1020);

Omni MedSci Ex. 2118
Samsung Electronics Co. Ltd., et al., v. Omni MedSci - IPR2025-01252

- Defendants' Supplemental Invalidity and Subject Matter Eligibility Contentions, July 18, 2025. *Omni MedSci, Inc. v. Samsung Electronics Co., Ltd. et al.*, No. 2:24-cv-01070-JRG-RSP (E.D. Tex.) (Ex. 1023);
- U.S. Patent No. 9,241,676 ("Lisogurski") (Ex. 1025);
- U.S. Patent Pub. No. 2010/0217102 ("LeBoeuf") (Ex. 1026);
- U.S. Patent No. 8,108,036 ("Tran") (Ex. 1027);
- U.S. Patent Pub. No. 2005/0049468A1 ("Carlson") (Ex. 1028);
- U.S. Patent No. 7,029,628 ("Tam") (Ex. 1030);
- U.S. Patent No. 8,050,730 ("Zhang") (Ex. 1031);
- U.S. Patent No. 8,821,397 ("Al-Ali") (Ex. 1032);
- U.S. Patent Pub. No. 2011/0237911 ("Lamego") (Ex. 1033);
- U.S. Patent No. 5,942,749 ("Takeuchi") (Ex. 1034);
- U.S. Patent No. 5,822,473 ("Magel") (Ex. 1035);
- U.S. Patent No. 5,592,124 ("Mullins") (Ex. 1036);
- E.F. Schubert, Light-Emitting Diodes (Cambridge Univ. Press, 2nd ed. reprinted 2014) (Ex. 1037);
- Joseph D. Bronzino, The Biomedical Engineering Handbook (1995) (Ex. 1038);
- U.S. Patent No. 8,079,735 ("Vakil") (Ex. 1039);

Omni MedSci Ex. 2118
Samsung Electronics Co. Ltd., et al., v. Omni MedSci - IPR2025-01252

- U.S. Patent Pub. No. 2012/0197093 ("Valencell-093") (Ex. 1041);
- U.S. Patent No. 8,862,196 ("Lynn") (Ex. 1042);
- U.S. Patent No. 8,412,655 ("Colman") (Ex. 1043);
- U.S. Patent No. 5,511,553 ("Segalowitz") (Ex. 1044);
- U.S. Patent No. 6,801,799 ("Mendelson") (Ex. 1045);
- U.S. Patent No. 6,662,033 ("Casciani") (Ex. 1046);
- U.S. Patent No. 5,028,787 ("Rosenthal") (Ex. 1047);
- U.S. Patent No. 9,239,951 ("Hoffberg") (Ex. 1048);
- U.S. Patent Pub. No. 2007/0194939 ("Alvarez") (Ex. 1049);
- U.S. Patent No. 8,364,226 ("Diab") (Ex. 1050);
- U.S. Patent No. 6,931,269 ("Terry") (Ex. 1051);
- U.S. Patent No. 5,497,769 ("Gratton") (Ex. 1059);
- U.S. Patent No. 5,827,182 ("Raley") (Ex. 1060);
- U.S. Patent No. 7,764,982 ("Dalke") (Ex. 1061);
- U.S. Patent No. 5,554,273 ("Demmin") (Ex. 1064);
- U.S. Patent No. 5,953,713 ("Behbehani") (Ex. 1065);
- U.S. Patent Pub. No. 2006/0184040 ("Keller") (Ex. 1077);
- U.S. Patent No. 9,651,533 ("'533 Patent") (Ex. 1081);
- U.S. Patent No. 10,517,484 ("'484 Patent") (Ex. 1082);

Omni MedSci Ex. 2118
Samsung Electronics Co. Ltd., et al., v. Omni MedSci - IPR2025-01252

- Declaration of Jonathan Bradford (Ex. 1084);
- Deposition of Brian W. Anthony, Volume I, April 17, 2026 (Ex. 2045);
- Deposition of Brian W. Anthony, Volume II, April 18, 2026 (Ex. 2046);
- Declaration of Mohammed N. Islam, Sc.D (Ex. 2100);
- OMS_SAM0031768 (Ex. 2101);
- OMS_SAM0031776 (Ex. 2102);
- OMS_SAM0031782 (Ex. 2103);
- OMS_SAM0031797 (Ex. 2104);
- OMS_SAM0031867 (Ex. 2105);
- OMS_SAM0031851 (Ex. 2106);
- OMS_SAM0031961 (Ex. 2107);
- U.S. Patent No. 5,632,272 to Diab et al. ("Masimo '272 Patent") (Ex. 2108);
- U.S. Patent No. 7,738,935 to Turcott ("Pacesetter '935 Patent") (Ex. 2109);
- U.S. Patent No. 6,126,595 to Amano et al. (Ex. 2110);
- Fitbit '854 Publication (Ex. 2111);
- GE Dash 2000 Patient Monitor Operating Manual (Ex. 2112);

Omni MedSci Ex. 2118
Samsung Electronics Co. Ltd., et al., v. Omni MedSci - IPR2025-01252

- Accuracy in wrist-worn, sensor-based measurements of heart rate and energy expenditure in a diverse cohort (Ex. 2113);
- Are Currently Available Wearable Devices for Activity Tracking and Heart Rate Monitoring Accurate, Precise, and Medically Beneficial? (Ex. 2114);
- A review of wearable sensors and systems with application in rehabilitation (Ex. 2115).

25. I have also considered any materials cited in this declaration to the extent they are not expressly listed above. My review of these materials was informed by my education, my work experience, and my experience designing medical devices.

26. I reserve the right to supplement my opinions or express additional opinions should additional and/or presently unknown information about this matter become known by me at a later date.

III. LEGAL STANDARDS

27. As a technical expert, I am not offering any legal opinions. Rather, I am offering technical assessments and opinions. In rendering my analysis, I have been informed by counsel regarding various legal standards for determining patentability. I have applied those standards in forming my technical opinions expressed in this declaration.

Omni MedSci Ex. 2118
Samsung Electronics Co. Ltd., et al., v. Omni MedSci - IPR2025-01252

A. Level of Ordinary Skill in the Art

28. I understand that the claims and specification of a patent are addressed to and intended to be read by others of skill in the art to which the patent pertains, or to which the patent is most nearly connected, at the time of the filing of the patent application.

29. I understand that a person of ordinary skill in the art ("POSITA") is a hypothetical person who is presumed to be aware of all of the pertinent art. The person of ordinary skill is not an automaton, and may be able to fit together the teachings of multiple prior art references employing ordinary creativity and the common sense that familiar items may have obvious uses beyond their primary purposes.

30. I understand that multiple factors should be used to decide the skill of the POSITA, including: the types of problems encountered in the art, prior art solutions to those problems, the rapidity with which innovations are made, the sophistication of the technology, and the education level of active workers in the field.

B. Claim Construction

31. The patent claims describe the invention made by the inventor and describe what the patent owner owns and what the owner may prevent others from using. I understand that an independent claim sets forth all the requirements that

Omni MedSci Ex. 2118
Samsung Electronics Co. Ltd., et al., v. Omni MedSci - IPR2025-01252

must be met to be covered by that claim. I further understand that a dependent claim does not itself recite all of the requirements of the claim but refers to another claim and incorporates all of the requirements of the claim to which it refers.

32. I understand that claim construction is the process by which the scope and meaning of terms used in the claims of a patent is determined. I understand that the goal of this process is to give claim terms the ordinary and customary meaning they would have had to a POSITA at the time of the invention, after reading the patent and its prosecution history.

33. I understand that the patent specification may reveal a special definition given to a claim term by the patentee that differs from the plain and ordinary meaning it would otherwise have to a POSITA. In such cases, I understand that the patentee's definition usually controls.

34. I understand that the prosecution history of a patent can inform the meaning of some claim language and that the prosecution history must be considered when construing the claims.

35. I understand that extrinsic evidence, such as dictionaries, treatises, and expert opinions, may also be considered to understand the technology at issue and the way in which claim terms would be understood by a POSITA in the relevant timeframe.

Omni MedSci Ex. 2118
Samsung Electronics Co. Ltd., et al., v. Omni MedSci - IPR2025-01252

C. Anticipation

36. I understand that anticipation analysis is a two-step process. The first step is to determine the meaning and scope of the asserted claims. Each claim must be viewed as a whole, and it is improper to ignore any element of the claim. For a claim to be anticipated under U.S. patent law: (1) each and every claim element must be identically disclosed, either explicitly or inherently, in a single prior art reference; (2) the claim elements disclosed in the single prior art reference must be arranged in the same way as in the claim; and (3) the identical invention must be disclosed in the single prior art reference, in as complete detail as set forth in the claim. Where even one element is not disclosed in a reference, the anticipation contention fails. Moreover, to serve as an anticipatory reference, the reference itself must be enabled, i.e., it must provide enough information so that a person of ordinary skill in the art can practice the subject matter of the reference without undue experimentation.

37. I understand that where a prior art reference fails to explicitly disclose a claim element, the prior art reference inherently discloses the claim element only if the prior art reference must necessarily include the undisclosed claim element. Inherency may not be established by probabilities or possibilities. The fact that an element may result from a given set of circumstances is not sufficient to prove inherency.

Omni MedSci Ex. 2118
Samsung Electronics Co. Ltd., et al., v. Omni MedSci - IPR2025-01252

D. Obviousness

38. I understand that a patent claim is invalid under 35 U.S.C. § 103 only if the differences between the claimed invention and the prior art are such that the subject matter as a whole would have been obvious at the time the invention was made to a person of ordinary skill in that art. An obviousness analysis requires consideration of four factors: (1) scope and content of the prior art relied upon to challenge patentability; (2) differences between the prior art and the claimed invention; (3) the level of ordinary skill in the art at the time of the invention; and (4) the objective evidence of non-obviousness, such as commercial success, unexpected results, the failure of others to achieve the results of the invention, a long-felt need which the invention fills, copying of the invention by competitors, praise for the invention, skepticism for the invention, or independent development.

39. I understand that a prior art reference is proper to use in an obviousness determination if the prior art reference is analogous art to the claimed invention. I understand that a prior art reference is analogous art if at least one of the following two considerations is met. First, a prior art reference is analogous art if it is from the same field of endeavor as the claimed invention, even if the prior art reference addresses a different problem and/or arrives at a different solution. Second, a prior art reference is analogous art if the prior art reference is reasonably pertinent to the

Omni MedSci Ex. 2118
Samsung Electronics Co. Ltd., et al., v. Omni MedSci - IPR2025-01252

problem faced by the inventor, even if it is not in the same field of endeavor as the claimed invention.

40. Furthermore, I understand that a claim may be obvious in view of a single prior art reference, without the need to combine references, if the elements of the claim that are not found in the reference can be supplied by the knowledge or common sense of one of ordinary skill in the relevant art.

41. I further understand that a reconstructive hindsight approach to this analysis, i.e., the improper use of post-invention information to help perform the selection and combination, or the improper use of the listing of elements in a claim as a blueprint to identify selected portions of different prior art references in an attempt to show that the claim is obvious, is not permitted. In other words, one should avoid using the challenged patent as a guide through the prior art references, combining the right references in the right way so as to achieve the result of the claims at issue. Instead, one must put oneself in the place of a person of ordinary skill at the time the invention was made and consider only what was known before the invention was made and not consider what was only known after the invention was made.

42. I also understand that when considering the obviousness of a patent claim, one must consider whether a teaching, suggestion, or motivation to combine the references exists so as to avoid impermissibly applying hindsight when

Omni MedSci Ex. 2118
Samsung Electronics Co. Ltd., et al., v. Omni MedSci - IPR2025-01252

considering the prior art. I understand that a teaching, suggestion, or motivation may be found explicitly or implicitly: (1) in the prior art; (2) in the knowledge of those of ordinary skill in the art; or (3) from the nature of the problem to be solved. I also understand that the motivation to combine references may include logic, judgment, and common sense, but that any such motivation to combine references must still avoid the improper application of hindsight or reliance on the patentee's disclosure of his invention as found in the patent specification, drawings, and claims.

43. I understand that it must also be shown that one having ordinary skill in the art at the time of the invention would have had a reasonable expectation that a modification or combination of one or more prior art references would have succeeded.

44. I understand that obviousness should be considered in light of the problems known to the person having ordinary skill in the art and the complexity of the alternatives for solving the problems. That individual elements of the claimed invention are disclosed in the prior art is not alone sufficient to reach a conclusion of obviousness.

45. While certain combinations of the prior art might be "obvious to try," I understand that any obvious to try analysis will not render a patent invalid unless it is shown that the possible combinations are: (1) sufficiently small in number so as to be reasonable to conclude that the combination would have been selected; and (2)

Omni MedSci Ex. 2118
Samsung Electronics Co. Ltd., et al., v. Omni MedSci - IPR2025-01252

such that the combination would have been believed to be one that would produce predictable and well understood results.

46. I understand that each alleged prior art reference in a proposed obviousness combination must be evaluated in its entirety, i.e., including those portions that would argue against obviousness, and must be considered for everything that it teaches, not simply the described invention or a preferred embodiment. I understand that it is impermissible to pick and choose from any one reference only so much of it as will support a given position to the exclusion of other parts necessary to the full appreciation of what such reference fairly suggests to one skilled in the art, or to ignore portions of the reference that argue against obviousness. I also understand that all of the supposed prior art to be combined as proposed must also be evaluated as a whole and should be evaluated for what they teach in combination as well as separately.

47. I also understand that if the teachings of a prior art reference would lead one skilled in the art to make a modification that would render that prior art device, system, or method inoperable, then such a modification would generally not be obvious. I also understand that if a proposed modification would render the prior art device, system, or method unsatisfactory for its intended purpose, then there is strong evidence that no suggestion or motivation existed at the time of the subject invention to make the proposed modification.

Omni MedSci Ex. 2118
Samsung Electronics Co. Ltd., et al., v. Omni MedSci - IPR2025-01252

48. I understand that it is improper to combine references where the references teach away from their combination. I understand that a reference may be said to teach away when a person of ordinary skill, upon reading the reference, would be discouraged from following the path set out in the reference, or would be led in a direction divergent from the path that was taken by the applicant. It is also my understanding that the degree of teaching away will depend on the particular facts; in general, a reference will teach away if it suggests that the line of development flowing from the reference's disclosure is unlikely to be productive of the result sought by the applicant. I understand that a reference teaches away, for example, if (1) the combination would produce a seemingly inoperative device, or (2) the references leave the impression that the product would not have the property sought by the applicant or would no longer achieve the intended purpose(s) of the references being modified or combined.

E. Dependent Claims

49. I understand that a dependent claim incorporates each and every limitation of the claim from which it depends. Thus, my understanding is that if a prior art reference or combination of prior art references fails to render obvious an independent claim, then that prior art reference or combination of prior art references also necessarily fails to render obvious all dependent claims that depend from the independent claim.

Omni MedSci Ex. 2118
Samsung Electronics Co. Ltd., et al., v. Omni MedSci - IPR2025-01252

IV. LEVEL OF SKILL IN THE ART

50. I understand that the level of ordinary skill in the relevant art at the time of the invention is relevant to inquiries such as the meaning of claim terms, the meaning of disclosures found in the prior art, and the reasons one of ordinary skill in the art may have for combining references.

51. I have reviewed the definition of the level of ordinary skill in the art proposed in the Petition, which is:

> on or before the claimed priority date of 12/31/2012, a POSITA would have had a good working knowledge of optical sensing techniques and their applications, and familiarity with optical design and signal processing techniques. A POSITA would have obtained such knowledge through an undergraduate education in engineering (electrical, mechanical, biomedical, or optical) or a related field of study, along with relevant experience studying or developing physiological monitoring devices…in industry or academia.

Petition, 15 (internal quotations and citations omitted).

52. For purposes of this declaration, I have applied the Petitioners' proposed definition in my analysis. I reserve the right to identify a differing level of skill in the art for the '455 Patent should an IPR be instituted.

53. As of the relevant time period of December 2012, I was at least a person of ordinary skill in the art through my education and experience under the definition Petitioners have proposed. I am also familiar with individuals having this level of

Omni MedSci Ex. 2118
Samsung Electronics Co. Ltd., et al., v. Omni MedSci - IPR2025-01252

skill in the relevant timeframe and am capable of addressing the issues from the perspective of such a person, and I have done so in this declaration.

V. OVERVIEW OF THE ’455 PATENT

54. The ’455 Patent discloses, for example, systems for measuring physiological parameters and for use with a smartphone or tablet. Ex. 1001 at Abstract, 8:29-31. The ’455 Patent discloses such systems, including a wearable device that includes a light source comprising a driver and a plurality of semiconductor sources that generate an output light that is delivered to tissue. Ex. 1001 at Abstract, 8:29-36. The ’455 Patent also discloses that the wearable device includes a detection system comprising a plurality of detectors, and the detection system receives at least a portion of reflected light and generates an output signal. Ex. 1001 at Abstract, 8:39-47.

55. An exemplary physiological measurement system is depicted in Figure 24:

Omni MedSci Ex. 2118
Samsung Electronics Co. Ltd., et al., v. Omni MedSci - IPR2025-01252

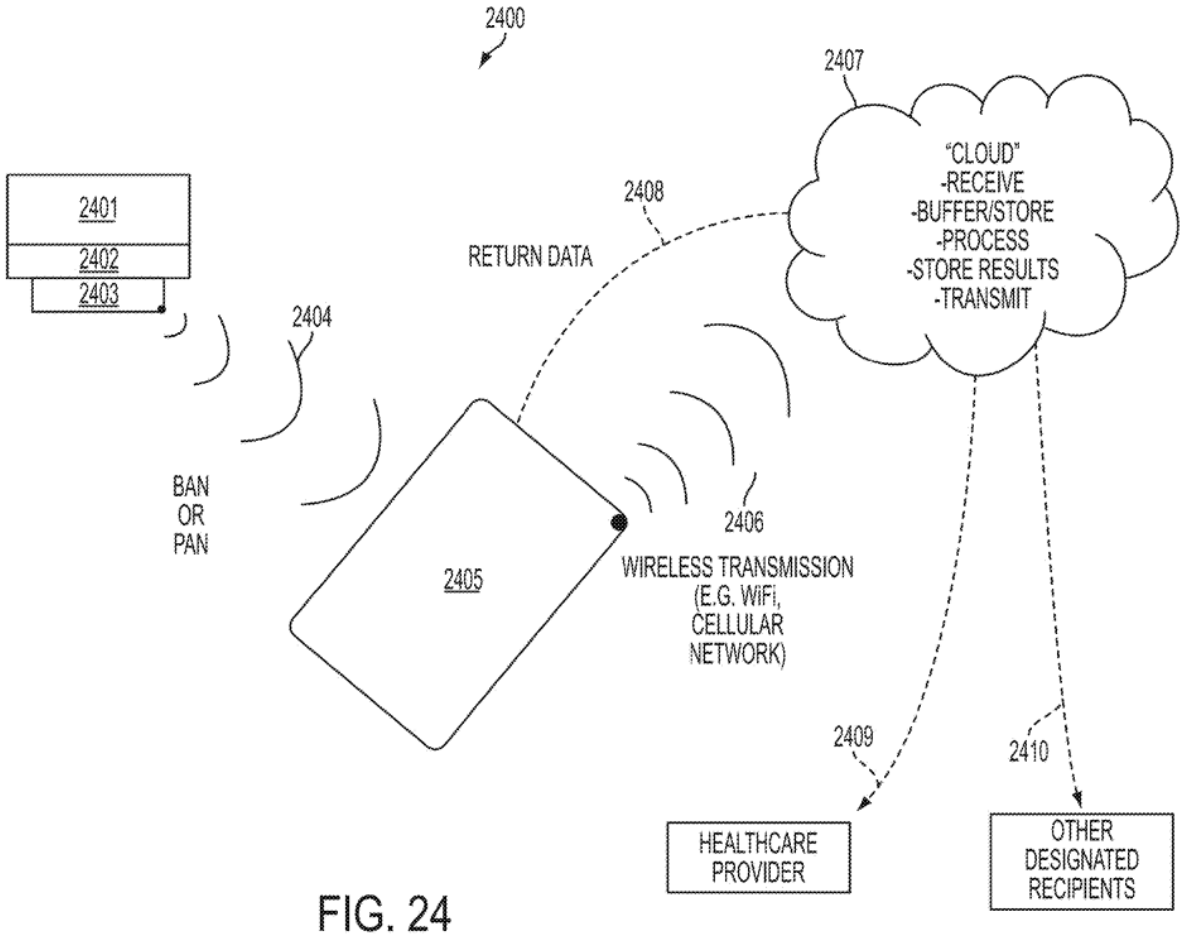

FIG. 24

Ex. 1001 at FIG. 24, 12:1-6. The exemplary system depicted in Figure 24 includes a measurement device 2401, a personal device 2405 such as a smartphone or tablet, and a cloud server 2407. Ex. 1001 at 36:18-56.

56. The '455 Patent discloses that the plurality of semiconductor sources and the plurality of detectors in the wearable device may be located on one or more arcs. Ex. 1001 at Abstract, 9:47-50. The '455 Patent also discloses that the wearable device may include a reflective surface to receive and redirect at least some of the

Omni MedSci Ex. 2118
Samsung Electronics Co. Ltd., et al., v. Omni MedSci - IPR2025-01252

output optical light from the plurality of semiconductor sources. Ex. 1001 at 87:51-54, 88:64-67, 90:23-26.

57. Additionally, the ’455 Patent discloses multiple techniques employed by the wearable measurement device that improve a signal-to-noise ratio of the signal. Ex. 1001 at 59:4-25. This results in a more accurate reading of the user’s physiological parameters despite interference from spectral artifacts. Ex. 1001 at 2:66-3:40.

58. The ’455 Patent includes 20 claims, and claims 1, 8, and 15 are independent claims. Ex. 1001 at 86:41-90:44.

VI. PROSECUTION HISTORY OF THE ’455 PATENT

59. I have reviewed and analyzed the prosecution history of the ’455 Patent. I understand that the ’455 Patent issued from U.S. Patent Application No. 17/078,771, which was filed on October 23, 2020.

60. I understand that U.S. Patent Application No. 17/078,771 was a continuation of U.S. Patent Application No. 16/772,188, which was filed on December 20, 2019, and issued as U.S. Patent No. 10,820,807.

61. I understand that the ’455 Patent claims priority to Provisional Application No. 61/747,472, which was filed on Dec. 31, 2012 and drafted at least as early as Aug. 3, 2012, Provisional Application No. 61/747,553, which was filed on Dec. 31, 2012 and drafted at least as early as Dec. 21, 2012, Provisional

Omni MedSci Ex. 2118
Samsung Electronics Co. Ltd., et al., v. Omni MedSci - IPR2025-01252

Application No. 61/747,485, which was filed on Dec. 31, 2012 and drafted at least as early as Sept. 30, 2012, Provisional Application No. 61/747,487, which was filed on Dec. 31, 2012 and drafted at least as early as Oct. 10, 2012, Provisional Application No. 61/747,477, which was filed on Dec. 31, 2012 and drafted at least as early as Dec. 24, 2012, and Provisional Application No. 61/754,698, which was filed on Jan. 21, 2013 and drafted at least as early as Aug. 10, 2012.

VII. CHALLENGED CLAIMS

62. I understand that the Petition challenges claims 1-20 ("the challenged claims") of the '455 Patent. Petition at 8. I understand that claims 1, 8, and 15 are independent claims. Ex. 1001 at 86:42-90:44. I further understand that dependent claims 2-7 depend (directly or indirectly) from independent claim 1, that dependent claims 9-14 depend (directly or indirectly) from independent claim 8, and that dependent claims 16-20 depend (directly or indirectly) from independent claim 15. Ex. 1001 at 86:42-90:44.

63. Certain of the challenged claims are reproduced below. Here and throughout the rest of my declaration, for clarity, I separate and identify the claim limitations of the challenged claims using the same separation and alphanumeric identifiers used by the Petition. *See* Petition at viii-xvii ("List of Challenged Claims").

64. Independent claim 1 recites the following:

Omni MedSci Ex. 2118
Samsung Electronics Co. Ltd., et al., v. Omni MedSci - IPR2025-01252

[1.pre] – A system for measuring one or more physiological parameters and for use with a smart phone or tablet, the system comprising:

[1.a] – a wearable device adapted to be placed on teeth, a wrist, or an ear of a user, and

[1.b] – including a light source comprising a driver and a plurality of semiconductor sources, the plurality of semiconductor sources configured to generate an output optical light having a plurality of optical wavelengths;

[1.c] – the wearable device comprising one or more lenses configured to receive at least a portion of the output optical light and to deliver a lens output light to tissue;

[1.d] – the wearable device further comprising a detection system configured to receive at least a portion of the lens output light reflected from the tissue and to generate an output signal having a signal-to-noise ratio,

[1.e] – wherein the detection system is configured to be synchronized to the light source;

[1.f] – wherein the detection system comprises a plurality of detectors that are spatially separated from each other, and wherein at least one analog to digital converter is coupled to at least one of the spatially separated detectors;

[1.g] – the smart phone or tablet comprising a wireless receiver, a wireless transmitter, a display, a speaker, a voice input module, a microprocessor and a touch screen, the smart phone or tablet configured to receive and process at least a portion of the output signal, wherein the smart phone or tablet is configured to store and display the processed output signal, and wherein at least a portion of the processed output signal is configured to be transmitted over a wireless transmission link;

[1.h] – wherein the output signal is indicative of one or more of the physiological parameters;

[1.i] – the wearable device configured to increase the signal-to-noise ratio by increasing light intensity of at least one of the semiconductor sources from an initial light intensity;

[1.j] – the detection system further configured to: generate a first signal responsive to light received while the semiconductor sources are off,

[1.k] – generate a second signal responsive to light received while at least one of the semiconductor sources is on; and

[1.l] – increase the signal-to-noise ratio by comparing the first signal and the second signal; and

[1.m] – wherein the plurality of optical wavelengths comprises three optical wavelengths for measuring at least a portion of the one or more of the

Omni MedSci Ex. 2118
Samsung Electronics Co. Ltd., et al., v. Omni MedSci - IPR2025-01252

physiological parameters, wherein the optical wavelengths comprise near infrared or visible wavelengths.

65. Dependent claim 2 depends from independent claim 1 and recites the following:

[2] – The system of claim 1, wherein the plurality of semiconductor sources comprises six light emitting diodes, and wherein the plurality of semiconductor sources and the plurality of spatially separated detectors are located on one or more arcs.

66. Dependent claim 6 depends indirectly from dependent claim 2 and independent claim 1. Claim 6 recites the following:

[6] – The system of claim 5, wherein the wearable device further comprises a reflective surface to receive and redirect at least some of the output optical light from the plurality of semiconductor sources.

67. Independent claim 8 recites the following:

[8.pre] – A system for measuring one or more physiological parameters and for use with a smart phone or tablet, the system comprising:
[8.a] – a wearable device adapted to be placed on a wrist or an ear of a user,
[8.b] – including a light source comprising a driver and a plurality of semiconductor sources that are light emitting diodes, the light emitting diodes configured to generate an output optical light having one or more optical wavelengths;
[8.c] – the wearable device comprising one or more lenses configured to receive at least a portion of the output optical light and to deliver a lens output light to tissue;
[8.d] – the wearable device further comprising a detection system configured to receive at least a portion of the lens output light reflected from the tissue and to generate an output signal having a signal-to-noise ratio,
[8.e] – wherein the detection system is configured to be synchronized to the light source;
[8.f] – wherein the detection system comprises a plurality of detectors that are spatially separated from each other, and wherein at least one analog to

Omni MedSci Ex. 2118
Samsung Electronics Co. Ltd., et al., v. Omni MedSci - IPR2025-01252

digital converter is coupled to at least one of the spatially separated detectors;

[8.g] – the smart phone or tablet comprising a wireless receiver, a wireless transmitter, a display, a microphone, a speaker, a microprocessor and a touch screen, the smart phone or tablet configured to receive and process at least a portion of the output signal, wherein the smart phone or tablet is configured to store and display the processed output signal, and wherein at least a portion of the processed output signal is configured to be transmitted over a wireless transmission link;

[8.h] – wherein the output signal is indicative of one or more of the physiological parameters;

[8.i] – the wearable device configured to increase the signal-to-noise ratio by increasing light intensity of at least one of the plurality of semiconductor sources from an initial light intensity; and

[8.j] – the detection system further configured to: generate a first signal responsive to light received while the light emitting diodes are off,

[8.k] – generate a second signal responsive to light received while at least one of the light emitting diodes is on, and

[8.l] – increase the signal-to-noise ratio by comparing the first signal and the second signal; and

[8.m] – wherein the plurality of semiconductor sources comprises six light emitting diodes.

68. Dependent claim 9 depends from independent claim 8 and recites the following:

[9] – The system of claim 8, wherein the plurality of semiconductor sources and the plurality of spatially separated detectors are located on one or more arcs.

69. Dependent claim 13 depends indirectly from independent claim 8 and recites the following:

[13] – The system of claim 12, wherein the wearable device further comprises a reflective surface positioned to receive and redirect at least some of the output optical light from the plurality of semiconductor sources.

70. Independent claim 15 recites the following:

Omni MedSci Ex. 2118
Samsung Electronics Co. Ltd., et al., v. Omni MedSci - IPR2025-01252

[15.pre] – A system for measuring one or more physiological parameters and for use with a smart phone or tablet, the system comprising:

[15.a] – a wearable device adapted to be placed on teeth, a wrist, or an ear of a user,

[15.b] – including a light source comprising a driver and a plurality of semiconductor sources that are light emitting diodes, the light emitting diodes configured to generate an output optical light having one or more optical wavelengths;

[15.c] – the wearable device comprising one or more lenses configured to receive at least a portion of the output optical light and to deliver a lens output light to tissue;

[15.d] – the wearable device further comprising a detection system configured to receive at least a portion of the lens output light reflected from the tissue and to generate an output signal having a signal-to-noise ratio,

[15.e] – wherein the detection system is configured to be synchronized to the light source;

[15.f] – wherein the detection system comprises a plurality of detectors that are spatially separated from each other, and wherein at least one analog to digital converter is coupled to at least one of the spatially separated detectors;

[15.g] – the smart phone or tablet comprising a wireless receiver, a wireless transmitter, a display, a microphone, a speaker, a microprocessor and a touch screen, the smart phone or tablet configured to receive and process at least a portion of the output signal, wherein the smart phone or tablet is configured to store and display the processed output signal, and wherein at least a portion of the processed output signal is configured to be transmitted over a wireless transmission link;

[15.h] – wherein the output signal is indicative of one or more of the physiological parameters;

[15.i] – the wearable device configured to increase the signal-to-noise ratio by increasing light intensity of at least one of the plurality of semiconductor sources from an initial light intensity; and

[15.j] – the detection system further configured to:

generate a first signal responsive to light received while the light emitting diodes are off,

[15.k] – generate a second signal responsive to light received while at least one of the light emitting diodes is on, and

[15.l] – increase the signal-to-noise ratio by comparing the first signal and the second signal;

Omni MedSci Ex. 2118
Samsung Electronics Co. Ltd., et al., v. Omni MedSci - IPR2025-01252

[15.m] – wherein the plurality of semiconductor sources comprises six light emitting diodes, and

[15.n] – wherein the plurality of semiconductor sources and the plurality of spatially separated detectors are located on one or more arcs; and

[15.o] – wherein the output optical light comprises wavelengths between 600 nm and 1000 nm to measure a level of oxy-hemoglobin and deoxy-hemoglobin.

71. Dependent claim 17 depends indirectly from independent claim 15 and recites the following:

[17] – The system of claim 16, wherein the wearable device further comprises a reflective surface to receive and redirect at least some of the output optical light from the plurality of semiconductor sources.

VIII. CLAIM CONSTRUCTION

72. Petitioners and Dr. Anthony note for certain patents related to the ’455 Patent, certain terms that are “identical to or substantially similar to” language in the challenged claims of the ’455 Patent were construed in prior Board or district court proceedings, and Petitioners and Dr. Anthony otherwise contend that the remaining terms in the challenged claims of the ’455 Patent do not require construction and can be afforded their plain and ordinary meaning. Petition at 16-18; Ex. 1003 at ¶¶ 55-66.

73. I am informed and understand that Petitioners have not proposed any claim constructions for the ’455 Patent in the pending Texas Case.

74. I reserve the right to update my opinions should the Board or a district court issue relevant claim constructions for terms within, or substantially similar to,

Omni MedSci Ex. 2118
Samsung Electronics Co. Ltd., et al., v. Omni MedSci - IPR2025-01252

the challenged claims of the ’455 Patent (or any other term or phrase in the ’455 Patent).

A. Prior Constructions of the Board

75. I understand that in a prior IPR involving U.S. Patent No. 9,651,533, which is related to the ’455 Patent, the Board construed the term “a light source comprising a plurality of semiconductor sources that are light emitting diodes … configured to increase signal-to-noise ratio by … increasing a pulse rate of at least one of the plurality of semiconductor sources” to mean “a light source containing two or more light emitting diodes (semiconductor sources), wherein at least one of the light emitting diodes is capable of having its pulse rate increased to increase a signal-to-noise ratio.” Ex. 1008 at 10-12.

76. I understand that in a prior IPR involving U.S. Patent No. 10,517,484, which is related to the ’455 Patent, the Board construed the term “to detect an object” to mean “to discover or notice the existence or presence of something.” Ex. 1015 at 8-10; Ex. 1016 at 3.

77. For purposes of this declaration, I have been asked to apply the Board’s constructions for these terms in my analysis of the grounds in the Petition.

Omni MedSci Ex. 2118
Samsung Electronics Co. Ltd., et al., v. Omni MedSci - IPR2025-01252

IX. OVERVIEW OF ASSERTED GROUNDS AND REFERENCES IN THE PETITION

A. Petitioners' Obviousness Grounds

78. I understand that Petitioners have challenged claims 1-20 of the '455 Patent as allegedly obvious under 35 U.S.C. § 103 based on eight (8) separate Grounds, as follows (Petition at 8):

Ground	Claims	Asserted Reference(s)			
1	1, 8, 11	Lisogurski			
2	2-4, 9-10, 15-17	Lisogurski	LeBoeuf		
3	1, 8, 12, 15	Lisogurski		Tran	
4	5-7, 13-14, 18-20	Lisogurski	LeBoeuf	Tran	
5	1, 8, 11	Lisogurski			Carlson
6	2-4, 9-10, 15-17	Lisogurski	LeBoeuf		Carlson
7	1, 8, 12, 15	Lisogurski		Tran	Carlson
8	5-7, 13-14, 18-20	Lisogurski	LeBoeuf	Tran	Carlson

B. Summary of Asserted References

79. I understand that Grounds 1-8 assert various combinations of the following references: "Lisogurski" (Ex. 1025), "LeBoeuf" (Ex. 1026), "Tran" (Ex. 1027), and "Carlson" (Ex. 1028). Petition at 7-8. I understand that Petitioners' Grounds rely on Lisogurski alone or in various combinations with LeBoeuf, Tran, and/or Carlson. Petition at 8. Herein, I refer to these alleged prior art references

Omni MedSci Ex. 2118
Samsung Electronics Co. Ltd., et al., v. Omni MedSci - IPR2025-01252

individually or in various combinations (depending on context) as the "the asserted reference[s]." Below are brief summaries of the asserted references.

1. Lisogurski (Ex. 1025) (Grounds 1-8)

80. U.S. Patent No. 9,241,676 ("Lisogurski") describes a non-invasive physiological monitoring system using pulse oximetry to measure blood oxygen saturation and related parameters. Ex. 1025 at 3:61-4:5. The system is illustrated in Figures 3 and 1:

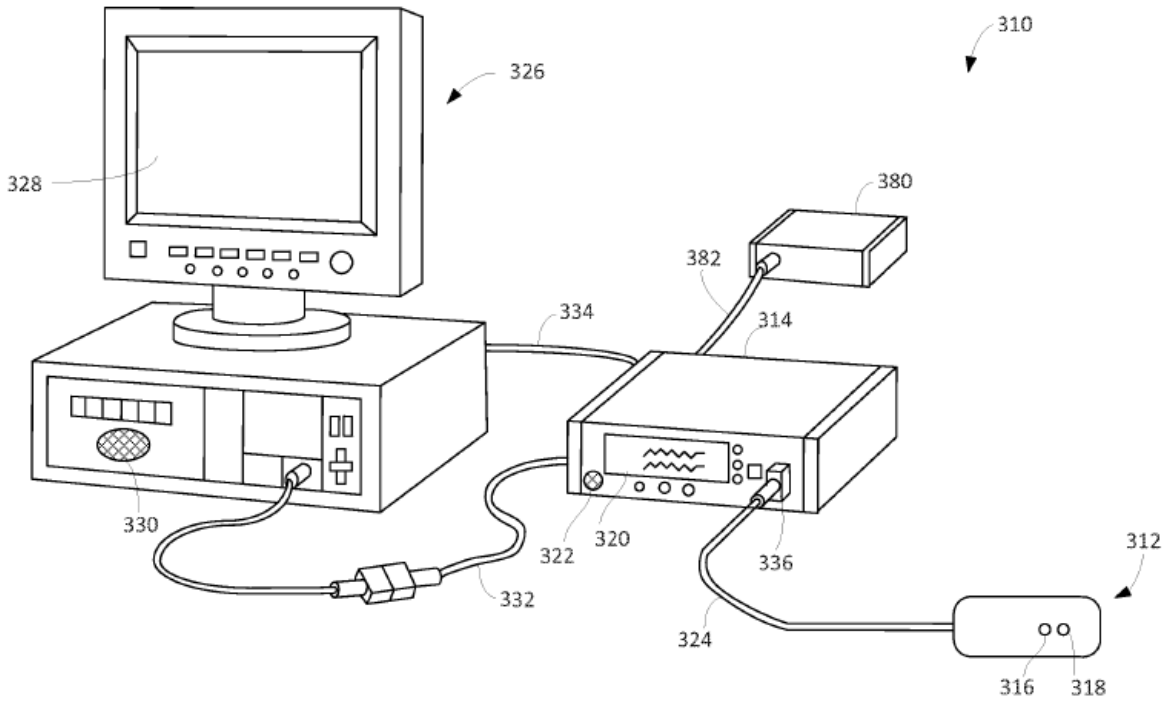

FIG. 3

Omni MedSci Ex. 2118
Samsung Electronics Co. Ltd., et al., v. Omni MedSci - IPR2025-01252

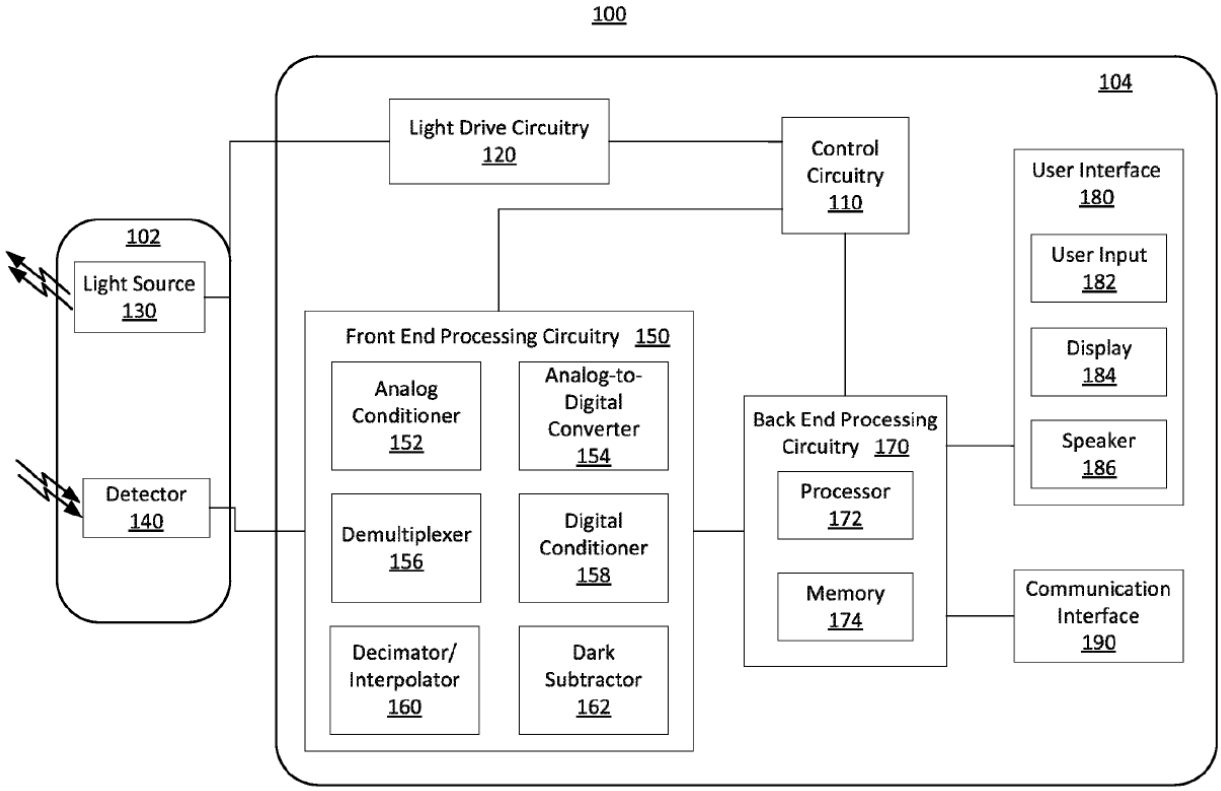

FIG. 1

Ex. 1025 at FIGS. 3, 1. The wearable portion is sensor unit 312, while the other components of the system, such as monitors 314, 326, and calibration device 380, are configured to perform data calculations, display information, and calibrate the system, respectively. Ex. 1025 at 17:54-18:15, 18:32-67. The system uses semiconductor emitters at different wavelengths to illuminate tissue, and a photodetector receives light and converts it into an electrical signal. Ex. 1025 at 4:42-62; 10:48-64. Front end processing circuitry 150 processes the electronic signal. Ex. 1025 at 12:42-49. Then, "[p]rocessor 172 may receive and process physiological signals received from front end processing circuitry 150. For

Omni MedSci Ex. 2118
Samsung Electronics Co. Ltd., et al., v. Omni MedSci - IPR2025-01252

example, processor 172 may determine one or more physiological parameters based on the received physiological signals." Ex. 1025 at 14:60-64. Based on known differences in wavelength absorption of oxyhemoglobin or deoxyhemoglobin, the system compares the intensities at the different wavelengths to estimate blood oxygen saturation. Ex. 1025 at 24:58-25:5.

2. LeBoeuf (Ex. 1026) (Grounds 2, 4, 6, 8)

81. U.S. Patent Application Publication No. US 2010/0217102 A1 ("LeBoeuf") describes monitoring devices and particularly light-guiding earbuds to be positioned within an ear. Ex. 1026 at Abstract, [0002], [0006], [0009], [0084]. For example, one such light-guiding earbud embodiment is shown in Figure 3:

Omni MedSci Ex. 2118
Samsung Electronics Co. Ltd., et al., v. Omni MedSci - IPR2025-01252

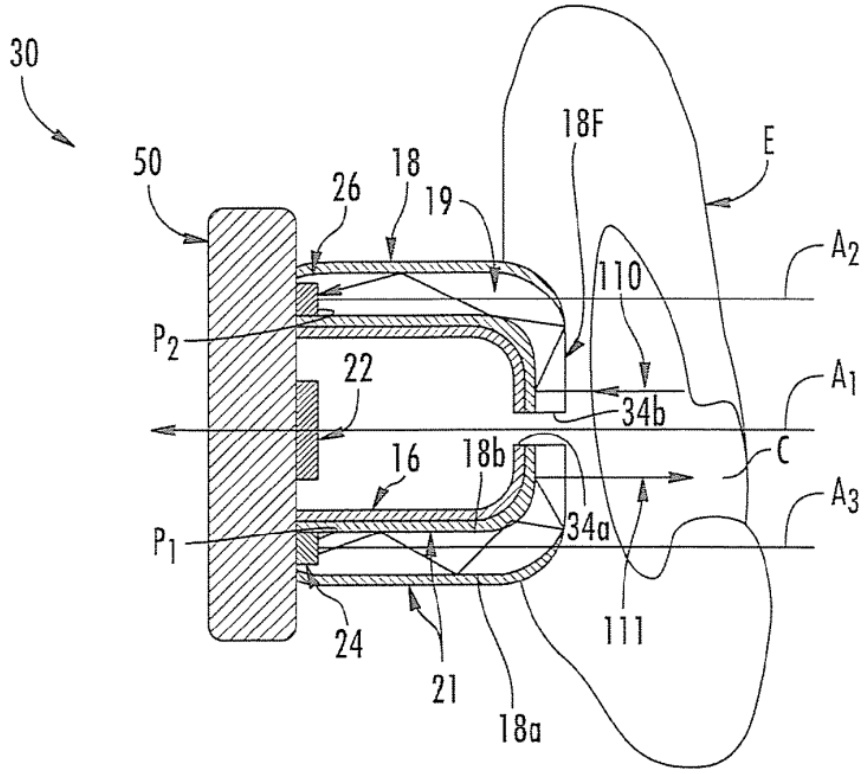

FIG. 3

Ex. 1026 at FIG. 3, [0042]. The earbuds include a speaker, such as speaker 22 shown in Figure 3, along with an earbud housing 16 in acoustical communication with the speaker 22 and apertures 34*a*-34*b* through which sound from the speaker 22 can pass. Ex. 1026 at [0006], [0009], [0102], FIG. 3. The earbuds also include a light-guiding cover to deliver light from an optical emitter into the ear canal and to deliver collected light to an optical detector, such as shown by cover 18, optical emitter 24, and optical detector 26 depicted in Figure 3. Ex. 1026 at Abstract, [0006], [0106], FIG. 3. The light directed into the ear from a light emitter and the subsequent collection of light at a detector may be used for detecting or measuring,

Omni MedSci Ex. 2118
Samsung Electronics Co. Ltd., et al., v. Omni MedSci - IPR2025-01252

for example, body or skin temperature, blood gas levels, heart rate, blood flow, etc. Ex. 1026 at [0010].

3. Tran (Ex. 1027) (Grounds 3-4, 7-8)

82. U.S. Patent No. 8,108,036 ("Tran") describes a patient heart monitoring system that includes wireless nodes forming a wireless mesh network. Ex. 1027 at Abstract, 3:3-13, 8:29-33. The system also includes a wearable appliance adapted to communicate with the wireless nodes and a statistical analyzer to determine a heart attack or stroke attack. Ex. 1027 at Abstract, 3:3-13. The wearable appliance may include sensors and non-invasively measure, for example, blood pressure. Ex. 1027 at 4:62-65, 9:23-30.

4. Carlson (Ex. 1028) (Grounds 5-8)

83. U.S. Patent Application Publication No. 2005/0049468 A1 ("Carlson") describes an optical pulse oximeter for non-invasive measurement of pulsation and blood oxygen saturation. Ex. 1028 at [0002]. Carlson describes an ear-clip form factor. Ex. 1028 at [0048]-[0049]. That form factor is illustrated in Figures 1 and 2:

Omni MedSci Ex. 2118
Samsung Electronics Co. Ltd., et al., v. Omni MedSci - IPR2025-01252

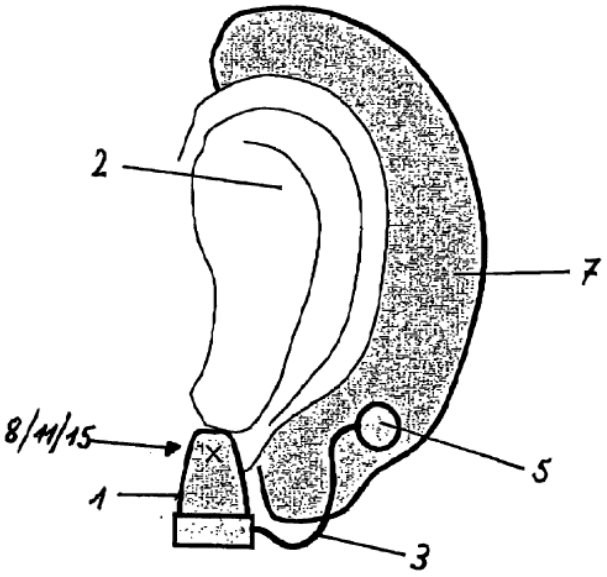

Figure 1

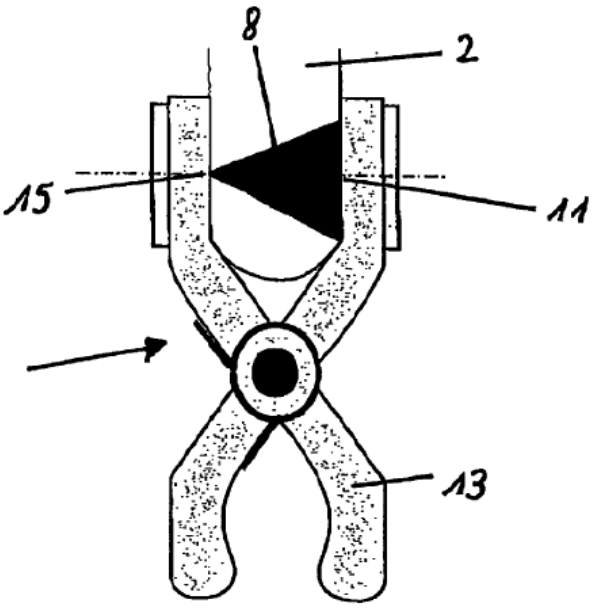

Figure 2

Ex. 1028 at FIGS. 1-2. Carlson describes optical and/or electronic means to improve signal-to-noise and signal-to-background performance by using beam shaping optical elements, such as diffractive or refractive lenses, to direct light into tissue and a photon detecting element. Ex. 1028 at [0010], [0013]-[0014]. Carlson also discloses the use of "optical wavelength filters" for filtering light to a particular range of wavelengths before it reaches a photo detecting element. Ex. 1028 at [0026], [0062]. Finally, Carlson describes module packaging arrangements integrating these optical elements. Ex. 1028 at [0041], [0062], FIG. 6*c*.

Omni MedSci Ex. 2118
Samsung Electronics Co. Ltd., et al., v. Omni MedSci - IPR2025-01252

X. OPINIONS ON GROUNDS IN THE PETITION

84. I understand that Petitioner has asserted obviousness in Grounds 1-8, as summarized above in Section IX, which collectively challenge claims 1-20 of the '455 Patent, described above in Section VII. Petition at 8. It is my opinion that none of the challenged claims is obvious over the asserted prior art in any of Grounds 1-8.

85. The challenged claims of the '455 Patent contain additional limitations that were not at issue and therefore not addressed in either of the prior IPR decisions. Petitioners and Dr. Anthony both admits that the challenged claims include "[a]dditional limitations." Petition at 3; Ex. 1003, ¶ 109 n.2 (admitting there are "new limitations" in the '455 Patent); Ex. 2046, 303:5-8, 303:18-23, 306:8-307:8.

86. For example, independent claims 1, 8, and 15 recite "a light source comprising a driver." Ex. 1001, 86:46-47, 87:63, 89:9-10. The claims of the '533 and '484 Patents at issue in the prior IPRs did not recite a "driver." Ex. 1081, 28:51-32:23; Ex. 1082, 36:45-40:55; Ex. 2046, 307:19-25. As another example, claims 1, 9, and 16 require "three optical wavelengths." Ex. 1001, 87:22-23, 88:43-44, 90:13-14. None of the claims of the '533 and '484 Patents require three wavelengths. Ex. 2046, 309:11-22; Ex. 1081, 28:51-32:23; Ex. 1082, 36:45-40:55.

87. Claim 1 also requires that "the optical wavelengths comprise near infrared or visible wavelengths." Ex. 1001, 87:25-26. This too was not recited in the

Omni MedSci Ex. 2118
Samsung Electronics Co. Ltd., et al., v. Omni MedSci - IPR2025-01252

claims of the '533 and '484 Patents. Ex. 2046, 309:23-310:10; Ex. 1081, 28:51-32:23; Ex. 1082, 36:45-40:55. Independent claim 8 recites "wherein the plurality of semiconductor sources comprises six light emitting diodes." Ex. 1001, 88:38-39. This is another new limitation. Ex. 2046, 310:16-25; Ex. 1081, 28:51-32:23; Ex. 1082, 36:45-40:55.

88. Independent claim 15 and dependent claims 2 and 9 each recite that "the plurality of semiconductor sources and the plurality of spatially separated detectors are located on one or more arcs." Ex. 1001, 87:27-31, 88:40-42. None of the claims considered in the prior IPRs recited an "arc." Ex. 2046, 312:20-313:12; Ex. 1081, 28:51-32:23; Ex. 1082, 36:45-40:55. Notably, Grounds 2, 4, 6, and 8 rely on LeBeouf as allegedly teaching the claimed "arc" arrangement but LeBeouf was not relied on in the prior IPRs. Petition at 55-58; Ex. 1008; Ex. 1015. This confirms that claims 2, 9 and 15 of the '455 Patent present materially different issues of patentability. MaxLinear, 880 F.3d at 1377-78.

89. Dependent claims 6, 13, and 17 each recite "a reflective surface [positioned] to receive and redirect at least some of the output optical light." Ex. 1001, 87:50-54, 88:64-67, 90:21-25. None of the claims addressed in the prior IPRs recited a "reflective surface." Ex. 2046, 316:6-24; Ex. 1081, 28:51-32:23; Ex. 1082, 36:45-40:55. Petitioners again rely on LeBouef—which was not at issue in the prior IPRs—as allegedly teaching the "reflective surface" in claims 6, 13, and 17. Petition

Omni MedSci Ex. 2118
Samsung Electronics Co. Ltd., et al., v. Omni MedSci - IPR2025-01252

at 58-60; Ex. 1008; Ex. 1015. Thus, claims 6, 13, and 17 of the '455 Patent present materially different issues of patentability. MaxLinear, 880 F.3d at 1377-78.

90. Dependent claim 11 also contains two additional limitations: (1) that "the output optical light comprises wavelengths between 600 nanometers and 1,000 nanometers to measure a level of oxyhemoglobin and deoxyhemoglobin" and (2) "the output signal corresponding to at least one of the optical wavelengths is used to improve measurement of the one or more physiological parameters using the output signal corresponding to the other two optical wavelengths." Ex. 1001, 88:48-54; Ex. 2046, 311:6-312:15; Ex. 1081, 28:51-32:23; Ex. 1082, 36:45-40:55.

91. Dependent claim 5 adds that "the system is configured to apply one or more regression signal processing methodologies to at least a part of the output signal." Ex. 1001, 87:46-49; Ex. 2046, 314:19-315:10; Ex. 1081, 28:51-32:23; Ex. 1082, 36:45-40:55.

A. Ground 1: Obviousness Based on Lisogurski (Claims 1, 8, and 11)

92. I understand that Petitioners and Dr. Anthony argue for Ground 1 that claims 1, 8, and 11 of the '455 Patent are obvious over Lisogurski alone. Petition at 8, 20-51; Ex. 1003 at ¶¶ 71, 75-257. I disagree for at least the reasons provided below.

Omni MedSci Ex. 2118
Samsung Electronics Co. Ltd., et al., v. Omni MedSci - IPR2025-01252

1. Independent Claim 1

93. I disagree with Petitioners and Dr. Anthony's assertion that claim 1 is obvious over Lisogurski.

a) Lisogurski Does Not Meet the Driver Limitation

94. Claim 1 of the '455 patent includes limitations [1.a]-[1.b] that together recite, in part, "a wearable device … including a light source comprising a driver and a plurality of semiconductor sources, the plurality of semiconductor sources configured to generate an output optical light." Ex. 1001 at 86:45-49; Petition at viii. Based on my review, Petitioners and Dr. Anthony rely on Lisogurski's sensor 102/312 as the claimed "wearable device," light source 130 as the claimed "light source," and light drive circuitry 120 as the claimed "driver." Petition at 29-31; Ex. 1003 at ¶¶ 115-118, 119, 125.

95. Limitation [1.b] recites "a light source ***comprising*** a driver." Ex. 1001 at 86:46-47 (emphasis added); Petition at viii. Petitioners and Dr. Anthony recognize, however, that Lisogurski does not disclose that its light source 130 (alleged "light source") "compris[es]" light drive circuitry 120 (alleged "driver"), as they instead rely on an alleged "modif[ication]" of Lisogurski. Petition at 31 (citing "§IX.B.2" of the Petition), 25-27 (i.e., §IX.B.2: "Motivation to Modify Lisogurski"); Ex. 1003 at ¶¶ 125 (citing "Section IX.A.2" of Dr. Anthony's declaration), 90-107 (i.e., Section IX.A.2: "Motivation to Modify Lisogurski"). More specifically,

Omni MedSci Ex. 2118
Samsung Electronics Co. Ltd., et al., v. Omni MedSci - IPR2025-01252

Petitioners and Dr. Anthony argue that a POSITA would have modified Lisogurski to relocate its light driver circuitry 120 to within light source 130. Petition at 31; Ex. 1003 at ¶ 125.

96. Lisogurski does not teach or render obvious the portion of limitation [1.b] that recites "a light source comprising a driver," including because (i) Lisogurski does not disclose this limitation and (ii) a POSITA would not have been motivated to modify Lisogurski to relocate its light drive circuitry 120 to within light source 130 as suggested by Petitioners and Dr. Anthony.

(1) Previous IPRs Regarding Related Patents

97. I understand that certain portions of the Petition and Dr. Anthony's declaration rely on findings by the Board in prior IPR proceedings challenging patents related to the '455 Patent, including: (i) the Board's Final Written Decision in IPR2019-00916 (Ex. 1008, "'533-FWD") regarding U.S. Patent No. 9,651,533 (Ex. 1081, "'533 Patent") and (ii) the Board's Final Written Decision in IPR2021-00453 (Ex. 1015, "'484-FWD") regarding U.S. Patent No. 10,517,484 (Ex. 1082, "'484 Patent"). *E.g.*, Petition at 25-27; Ex. 1003 at ¶¶ 92, 106, 120-21.

98. As Petitioners and Dr. Anthony acknowledge, however, the claimed "driver" recited in limitation [1.b] of the '455 Patent is not recited in the claims of either the '533 Patent or '484 Patent. *See* Petition at 3 ("Additional limitations in the '455 Claims … recite … a [] driver"); Ex. 1003 at ¶¶ 43, 122-123 (recognizing

Omni MedSci Ex. 2118
Samsung Electronics Co. Ltd., et al., v. Omni MedSci - IPR2025-01252

"the '455 patent's addition of 'a light source comprising a driver'" compared to the '533 Patent and '484 Patent). Therefore, I understand that to the extent that Petitioners and Dr. Anthony rely on the Board's findings in the '533-FWD and '484-FWD, those prior findings do not address the claimed "driver" recited in the '455 Patent's claim limitation [1.b].

(2) Lisogurski Does Not Disclose "a light source comprising a driver"

99. Lisogurski does not disclose "a light source comprising a driver" as recited in limitation [1.b] because Lisogurski does not disclose that its light drive circuitry (alleged "driver") is within light source 130 (alleged "light source"). Instead, Lisogurski teaches that light drive circuitry 120 and light source 130 are two separate and distinct components of Lisogurski's system.

100. As depicted in the following annotated version of Lisogurski's Figure 1 and explained in the accompany description, Lisogurski's system includes light source 130 (red) as a first component located in sensor 102 (purple) and includes light drive circuitry 120 (blue) as a different component that is separate and distinct from light source 130 and is located in monitor 104 (green), which is separate and distinct from sensor 102:

Omni MedSci Ex. 2118
Samsung Electronics Co. Ltd., et al., v. Omni MedSci - IPR2025-01252

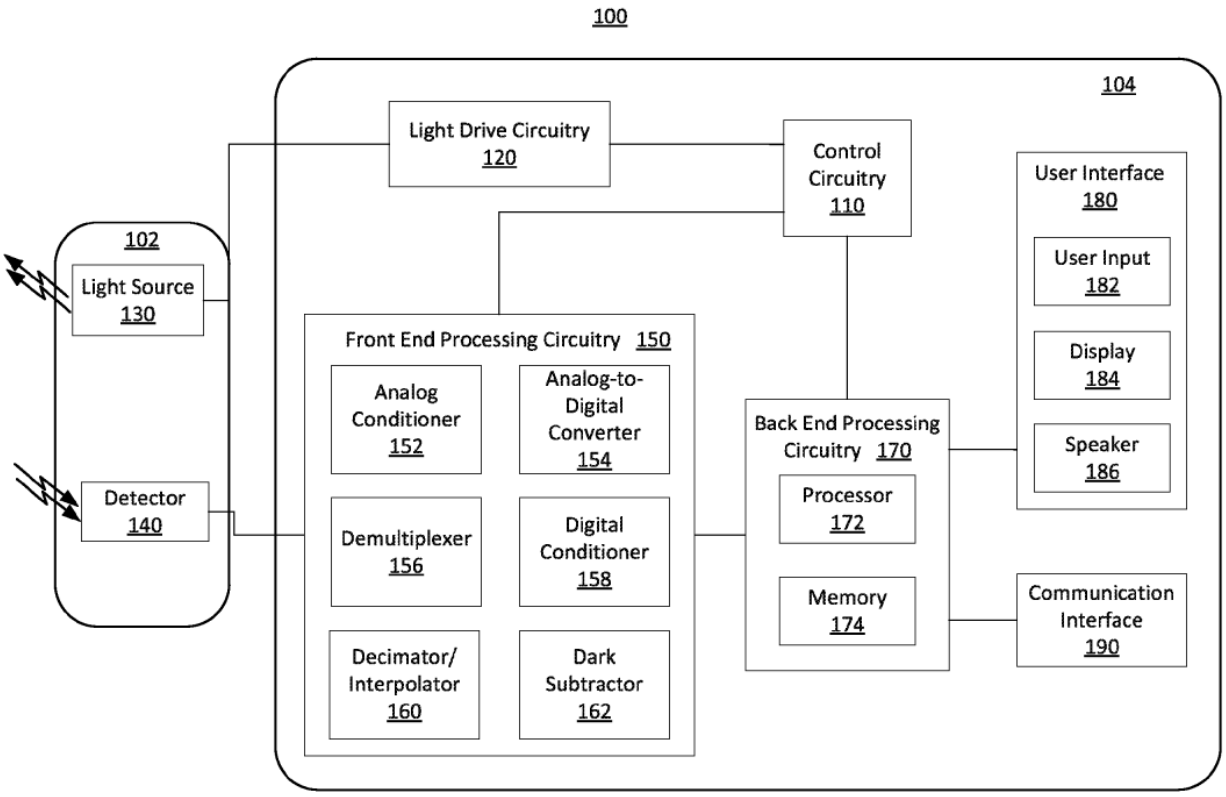

FIG. 1

Ex. 1025 at FIG. 1 (annotated), 10:42-49, 11:28-32.

101. Based on my review, this Figure 1 and the accompany description constitute Lisogurski's only disclosure regarding light drive circuitry 120, and Lisogurski does not disclose that light drive circuitry 120 can be located within, or otherwise combined with, light source 130. *See* Ex. 1025 at 11:28-66 (containing Lisogurski's only mentions of light drive circuitry 120).

102. Lisogurski states the following with respect to the monitoring system depicted in Figure 1: "In some embodiments the functionality of some of the components may be combined in a single component." Ex. 1025 at 15:66-16:4.

Omni MedSci Ex. 2118
Samsung Electronics Co. Ltd., et al., v. Omni MedSci - IPR2025-01252

However, neither this statement nor the paragraph containing this statement in Lisogurski mentions either light source 130 or light drive circuitry 120, much less teaches that light drive circuitry 120 can be relocated within light source 130. *See* Ex. 1025 at 15:66-16:16. Instead, the paragraph containing that statement in Lisogurski discloses examples related to components in Figure 1 other than light source 130 and light drive circuitry 120. Ex. 1025 at 15:66-16:16. Additionally, a POSITA would not have understood this statement in Lisogurski to apply to relocating light drive circuitry 120 to within light source 130 for the reasons discussed below.

103. Based on the foregoing, Lisogurski does not disclose the claim limitation of "a light source comprising a driver." Indeed, based on my review, Petitioners and Dr. Anthony appear to acknowledge this deficiency in Lisogurski, since they instead rely on an alleged modification of Lisogurski to meet this claim limitation. *See* Petition at 31 (citing "§IX.B.2" of the Petition), 25-27 (i.e., §IX.B.2: "Motivation to Modify Lisogurski"); Ex. 1003 at ¶¶ 125 (citing "Section IX.A.2" of Dr. Anthony's declaration), 90-107 (i.e., Section IX.A.2: "Motivation to Modify Lisogurski").

Omni MedSci Ex. 2118
Samsung Electronics Co. Ltd., et al., v. Omni MedSci - IPR2025-01252

(3) Petitioners and Dr. Anthony Do Not Show that a POSITA Would Have Been Motivated to Modify Lisogurski to Meet the Claim Limitation Regarding "a light source comprising a driver"

104. For the portion of claim limitation [1.b] that recites "a light source comprising a driver," I understand that Petitioners and Dr. Anthony argue that a POSITA would have modified Lisogurski to relocate its light drive circuitry 120 (alleged "driver") to ***within*** light source 130 (alleged "light source") to meet this limitation. Petition at 31 (asserting that Lisogurski's light drive circuitry 120 would "be within light source 130"); Ex. 1003 at ¶ 125 (asserting that Lisogurski's light drive circuitry 120 "would be located within … light source 130").

105. In my opinion, Petitioners and Dr. Anthony do not, with supporting evidence, show that a POSITA would have been motivated to modify Lisogurski to relocate its light drive circuitry 120 to within light source 130.

106. The Petition's analysis regarding the portion of limitation [1.b] that recites "a light source comprising a driver" constitutes only a single paragraph, which contains only a single sentence asserting that Lisogurski's light drive signal 120 would have been relocated to *within* light source 130, and the only cited support for this assertion is the Petition's Section IX.B.2:

> Regarding "a light source comprising a driver," Lisogurski further teaches "***light drive circuitry 120***," which a POSITA would have understood (or at least found obvious) to be ***within light source 130***

Omni MedSci Ex. 2118
Samsung Electronics Co. Ltd., et al., v. Omni MedSci - IPR2025-01252

> because, as the Board agreed, light drive circuitry 120 and light source 130 operate together to output the electric current applied to the light source. §IX.B.2.

Petition at 31 (emphasis added) (citing only "§IX.B.2"). Similarly, Dr. Anthony's analysis for the portion of limitation [1.b] that recites "a light source comprising a driver" contains only a single paragraph asserting that Lisogurski's light drive signal 120 would have been relocated to *within* light source 130, and the only cited support in the entire paragraph is Section IX.A.2 of his declaration:

> As I discuss above in Section IX.A.2, a person having ordinary skill in the art would have understood (or at least found obvious) that a driver (i.e., ***light drive circuitry 120***) and control circuitry 110 ***would be located within Lisogurski's light source 130***. This is because the light drive circuitry 120, control circuitry 110, and light source 130 are operationally interdependent components: the light drive circuitry 120 and control circuitry 110 are both responsible for generating the drive signals that control the operation of the light source 130. Given that the drive and control circuitry work together to control the electrical current applied to the light source, it would have been routine design practice to integrate the two components within a common device. Combining driver and control circuitry with the optical sources reduces electrical noise and interference, enhances reliability, simplifies device architecture, and facilitates more efficient manufacturing. These were standard design goals well known in the art and would have been pursued by a person of ordinary skill in the art at the time of the claimed invention to improve the overall responsiveness of Lisogurski's system.

Ex. 1003 at ¶ 125 (emphasis added) (citing only "Section IX.A.2").

Omni MedSci Ex. 2118
Samsung Electronics Co. Ltd., et al., v. Omni MedSci - IPR2025-01252

107. Based on my review, however, these assertions by Petitioners and Dr. Anthony about relocating Lisogurski's light drive circuitry 120 to within light source 130 for purposes of limitation [1.b] are not supported by the cited Section IX.B.2 of the Petition and Section IX.A.2 of Dr. Anthony's declaration, respectively, which purport to address "Motivation to Modify Lisogurski." Petition at 25-27 (Petition Section IX.B.2); Ex. 1003 at ¶¶ 90-107 (Dr. Anthony declaration Section IX.A.2). This is because, as depicted in the annotated version of Lisogurski's Figure 1 below, the cited Section IX.B.2 of the Petition and Section IX.A.2 of Dr. Anthony's declaration assert that a POSITA would have been motivated to relocate Lisogurski's light drive circuitry 120 (blue) to within ***sensor 102*** (purple), not within ***light source 130*** (red). Petition at 25-27; Ex. 1003 at ¶¶ 90-107. This is inconsistent with Petitioners and Dr. Anthony's assertions for limitation [1.b] that Lisogurski's light drive circuitry 120 would have been relocated to within ***light source 130*** (red). Petition at 31; Ex. 1003 at ¶ 125.

Omni MedSci Ex. 2118
Samsung Electronics Co. Ltd., et al., v. Omni MedSci - IPR2025-01252

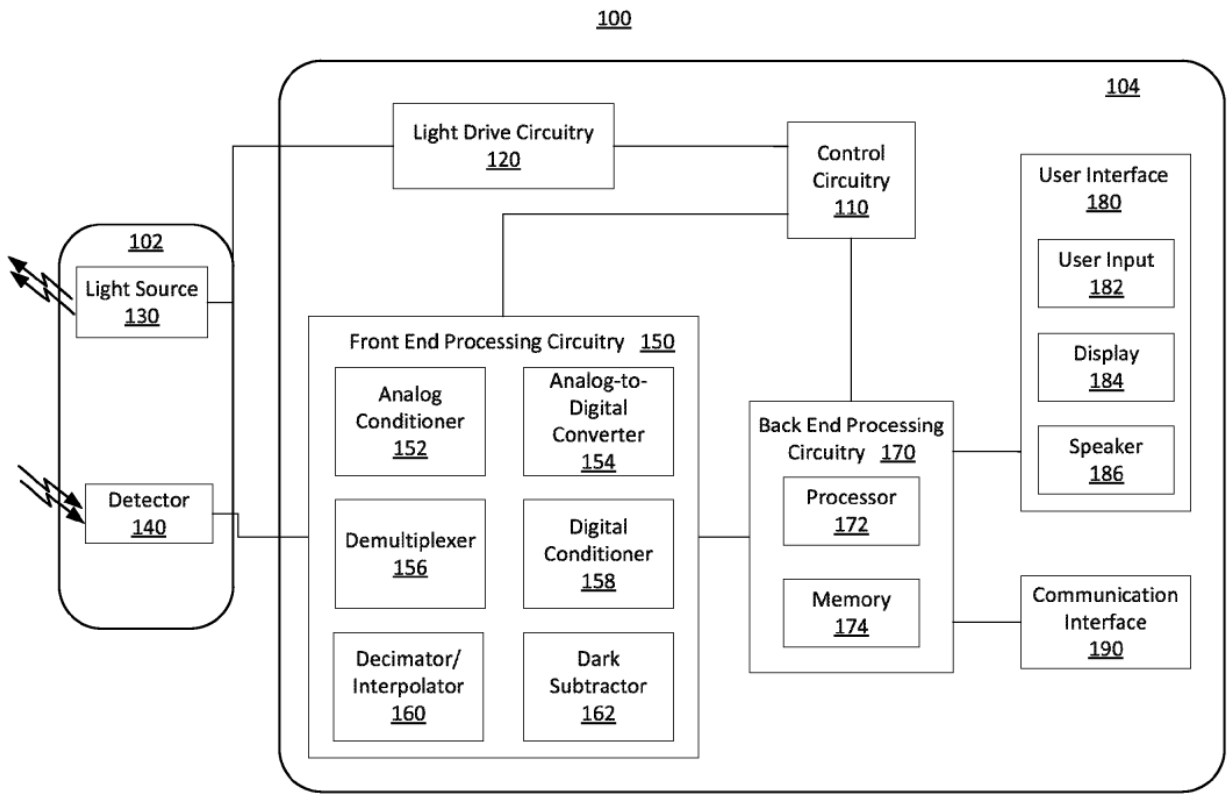

FIG. 1

Ex. 1025 at FIG. 1 (annotated).

108. According to Petition Section IX.B.2 , a POSITA would have been motivated to relocate Lisogurski's light drive circuitry 120 only to sensor 102, not light source 130 therein: "a POSITA would have been motivated to modify Lisogurski[] … to 'relocat[e] … light drive circuitry 120 … ***to sensor 102***'"; "[a]s to … light drive circuitry 120, … a POSITA would have understood or at least found it obvious to include the circuitry ***in the same device as*** the light source [130]," i.e., in sensor 102. Petition at 25-26 (emphases added) (citing '533-FWD at 22-25). Similarly, according to Section IX.A.2 of Dr. Anthony's declaration, a POSITA

Omni MedSci Ex. 2118
Samsung Electronics Co. Ltd., et al., v. Omni MedSci - IPR2025-01252

would have been motivated to relocate Lisogurski's light drive circuitry 120 only to sensor 102, not light source 130 therein: "[a] person of ordinary skill in the art would have been motivated to modify Lisogurski[] … to place … light drive circuitry 120 … ***to sensor 102***"; "a person of ordinary skill in the art would have been motivated to combine … control circuitry 110 and light drive circuitry 120 into a single device—specifically, ***within the device where light source 1[3]0 … [is] located (i.e., sensor 102)***"; "[i]t would have been obvious to include … light drive circuitry 120 ***in sensor 102***"; "it was … obvious to include … light drive circuitry 120 to be located ***alongside the light source 130 within sensor 102***"; "adding the light drive … ***to sensor 102***"; "integration of the light drive circuitry … ***into sensor 102***"; "[i]ntegrating … light drive circuitry 120 into … ***sensor 102***"; "integrating the … light drive circuitry … ***with the sensor***"; "desire to relocate … light drive circuitry 120 … ***to the sensor 102***"; "[i]ntegrating light drive circuitry … ***into sensor assemblies***"; "integration of … drive circuitry ***with the sensor***"; "integration of … light drive circuitry … ***into sensor 102***"; "as to … light drive circuitry 120 … a person of ordinary skill in the art would have understood or at least found it obvious to include the circuitry ***in the same device as*** the light source [130]," i.e., in sensor 102." Ex. 1003 at ¶¶ 90, 94-95, 100-02, 104, 106 (emphases added). These assertions in Section IX.B.2 of the Petition and Section IX.A.2 of Dr. Anthony's declaration are inconsistent with, and do not support, Petitioners' assertion for

Omni MedSci Ex. 2118
Samsung Electronics Co. Ltd., et al., v. Omni MedSci - IPR2025-01252

limitation [1.b] that Lisogurski's light drive circuitry 120 would have been relocated to within ***light source 130***. Petition at 31.

109. I note that Petition Section IX.B.2 also states that "it was common for light sources to include light drive circuitry" (Petition at 27) and Section IX.A.2 of Dr. Anthony's declaration also states that "it was common for light sources to include light drive circuitry" (Ex. 1003 at ¶¶ 104, 106). However, these statements do not assert that a POSITA would have been motivated to relocate Lisogurski's light drive circuitry 120 to within light source 130, and regardless, Exhibits 1031 and 1033-35 cited for these statement would not support such an assertion because according to the parenthetical descriptions that Petitioners and Dr. Anthony provide for those cited exhibits, all but one (Ex. 1031) relate to processing circuitry rather than light drive circuitry, and that one (Ex. 1031) purportedly only teaches locating "light driver circuit in [a] probe," not specifically in a light source. Petition at 27; Ex. 1003 at ¶¶ 104-06. Also, to the extent that these statements are intended to assert that Lisogurski's light drive circuitry 120 would have been relocated specifically to light source 130, they are inconsistent with the assertions quoted above from Section IX.B.2 of the Petition and Section IX.A.2 of Dr. Anthony's declaration that assert that Lisogurski's light drive circuitry would only be relocated to only sensor 102, not light source 130 therein. Petition at 25-27; Ex. 1003 at ¶¶ 90, 94-95, 100-02, 104, 106.

Omni MedSci Ex. 2118
Samsung Electronics Co. Ltd., et al., v. Omni MedSci - IPR2025-01252

110. I understand that Petition Section IX.B.2 relies on the Board's prior finding in the '533-FWD. Petition at 25-27 (citing '533-FWD at 22-25). According to the '533-FWD, the only motivation in the '533-IPR that was proposed by the petitioner and found by the Board was the motivation to relocate Lisogurski's light drive circuitry 120 to within sensor 102, not within light source 130. '533-FWD at 22-23 ("Petitioner's proposed combination relocates some components of Lisogurski's monitor 104/314 ***to sensor 102/312***"; "Petitioner's proposed combination … involves relocating … light drive circuitry 120 … ***to sensor 102***"; "Petitioner articulates sufficient reasoning … why a [POSITA] would have modified Lisogurski's ***sensor 102/312*** … in the manner proposed"). Based on my review, the portion of the '533-FWD cited by Petition Section IX.B.2 regarding modifying Lisogurski contains no discussion of relocating light drive circuitry 120 to within light source 130. '533-FWD at 22-25. To be sure, I understand that in other portions of the '533-FWD that compare Lisogurski to the '533 Patent claims, the '533-FWD discusses a "light drive signal" that Lisogurski's light drive circuitry sends to light source 130, which shows that the modification of Lisogurski in the '533-FWD did not relocate light drive circuitry 120 to within light source 130. '533-FWD at 27, 32-33.

111. Additionally, my understanding, as explained above, that Section IX.B.2 of the Petition, the '533-FWD relied upon therein, and Section IX.A.2 of Dr.

Omni MedSci Ex. 2118
Samsung Electronics Co. Ltd., et al., v. Omni MedSci - IPR2025-01252

Anthony's declaration all address relocating Lisogurski's light drive circuitry 120 to within sensor 102 (not within light source 130 therein) matches the fact that those same sources also assert or find that a POSITA would have relocated Lisogurski's front end processing circuitry 150 to within sensor 102 (not within detector 140 therein). Petition at 25-27; '533-FWD at 22-23; Ex. 1003 at ¶¶ 90, 93, 98-101, 106.

112. I understand that Section IX.B.2 of the Petition and Section IX.A.2 of Dr. Anthony's declaration both include the following annotated version of Lisogurski's Figure 1, which was included in the '533-FWD:

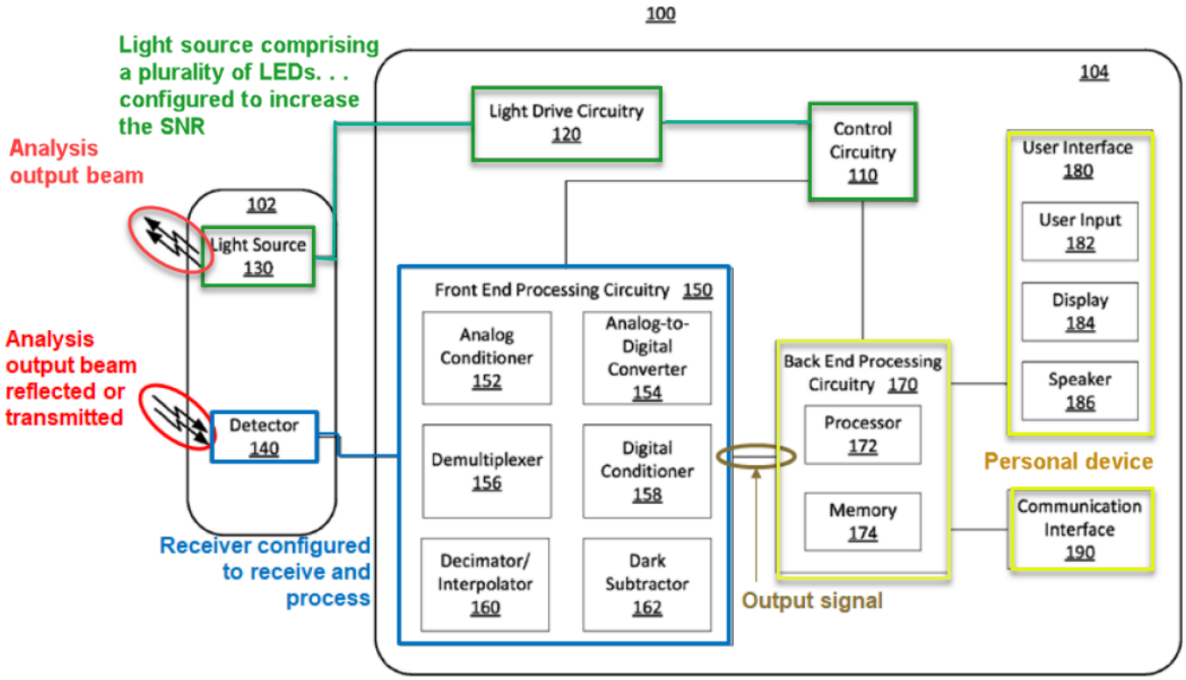

FIG. 1

Petition at 25-26; Ex. 1003 at ¶ 90; *see* '533-FWD at 22. Based on my review, however, I understand that the annotations came from the petitioner in the '533-IPR, not from the Board, because the '533-FWD states that this "combine[s]" "a

series of [p]etitioner-modified versions of Lisogurski's Figure 1." '533-FWD at 22. Additionally, to the extent that Petitioners or Dr. Anthony seek to use this annotated version of Lisogurski's Figure 1 to show motivation to relocate light drive circuitry 120 to within light source 130, such alleged motivation is not supported by, and is inconsistent with, the '533-FWD, which states that the modification illustrated by this annotated version of Lisogurski's Figure 1 involves relocating light drive circuitry 120 to sensor 102, not light source 130. '533-FWD at 22-23 ("Petitioner's proposed combination relocates some components … ***to sensor 102/312***, as illustrated in … Petitioner-modified versions of Lisogurski's Figure 1, which we combine into a single modified version … . Modified Figure 1 of Lisogurski illustrates Petitioner's proposed combination, which involves relocating … light drive circuitry 120 … ***to sensor 102*** as illustrated." (emphases added)).

113. I also understand that Section IX.B.2 of the Petition and Section IX.A.2 of Dr. Anthony's declaration both rely on the following statements from Lisogurski: "the functionality of some of the components may be combined in a single component" and "the functionality of some of the components of monitor 104 … may be divided over multiple components." Petition at 26 (referring to Ex. 1025 at 16:2-4, 16:7-9); Ex. 1003 at ¶¶ 91-92 (same). However, in my opinion, these statements in Lisogurski do not provide or support a motivation to relocate

Omni MedSci Ex. 2118
Samsung Electronics Co. Ltd., et al., v. Omni MedSci - IPR2025-01252

Lisogurski's light drive circuitry 120 to within light source 130. *See* Ex. 1025 at 16:2-4 (stating that only "***some*** of the components" may be combined (emphasis added)), 16:7-9 (same). For example, neither these statements nor the paragraph containing these statement in Lisogurski mentions either light source 130 or light drive circuitry 120, much less teaches that light drive circuitry 120 can be relocated within light source 130. *See* Ex. 1025 at 15:66-16:16. Instead, the paragraph containing these statements in Lisogurski discloses examples related to components in Figure 1 other than light source 130 and light drive circuitry 120. Ex. 1025 at 15:66-16:16. I understand that Section IX.B.2 of the Petition and Section IX.A.2 of Dr. Anthony's declaration both refer to the Board's reliance on these statements from Lisogurski in the '533-FWD, but as discussed above, based on my review, the '533-FWD only addressed relocating light drive circuitry 120 from monitor 104 to sensor 102, not relocating it to within light source 130. Petition at 26; Ex. 1003 at ¶ 92; '533-FWD at 23. Additionally, a POSITA would not have understood these statements in Lisogurski to apply to relocating light drive circuitry 120 to within light source 130 for the reasons discussed below with respect to there being no motivation for this modification.

114. As for what Petitioners and Dr. Anthony allege as the purported motivation for relocating Lisogurski's light drive circuitry 120 to within light source 130, they merely argue that a POSITA would have been motivated to make this

Omni MedSci Ex. 2118
Samsung Electronics Co. Ltd., et al., v. Omni MedSci - IPR2025-01252

modification because the two components **work together**. That is, as explained above, the Petition's analysis for the "driver" portion of limitation [1.b] constitutes only a single paragraph, which asserts that a POSITA would have understood or found obvious that Lisogurski's light drive circuitry 120 would "be within light source 130 ***because***, as the Board agreed, ***light drive circuitry 120 and light source 130 operate together*** to output the electric current applied to the light source" (citing §IX.B.2), adding that "[l]ight drive circuitry 120 turns on/off the 'light source 130' by generating 'light drive signal[s].'" Petition at 31 (emphasis added) (citing §IX.B.2; Ex. 1025 at 10:42-46, 11:28-31, 11:38-41, 11:50-60). Also, as explained above, Dr. Anthony's analysis of limitation [1.b] contains only a single paragraph asserting that Lisogurski's light drive signal 120 would be relocated to within light source 130, and similar to the Petition, this paragraph asserts that "***[t]his is because the light drive circuitry 120 … and light source 130 are operationally interdependent components***: the light drive circuitry 120 … [is] … responsible for generating the drive signals that control the operation of the light source 130." Ex. 1003 at ¶ 125 (emphasis added) (citing only "Section IX.A.2"). Also, the only citation in this paragraph of Dr. Anthony's declaration is to Section IX.A.2 of his declaration. Ex. 1003 at ¶ 125. As explained below, this alleged motivation fails for at least three reasons.

Omni MedSci Ex. 2118
Samsung Electronics Co. Ltd., et al., v. Omni MedSci - IPR2025-01252

115. First, Petitioners and Dr. Anthony's alleged motivation is unsupported. Petitioners and Dr. Anthony cite to Section IX.B.2 of the Petition and Section IX.A.2 of Dr. Anthony's declaration, respectively, but those cited sections of the Petition and declaration do not support the assertion that Lisogurski's light drive circuitry 120 and light source 130 working together would have motivated a POSITA to relocate the light drive circuitry 120 to within light source 130. To the extent that those sections of the Petition and declaration do discuss Lisogurski's light drive circuitry 120 and light source 130 working together, those sections do not establish this as motivation to relocate light drive circuitry 120 to within light source 130 because, as explained above, those sections of the Petition and declaration assert instead that Lisogurski's light drive circuitry 120 would have been relocated to sensor 102, not light source 130. Petition at 25-26; Ex. 1003 at ¶ 90. For example, the only discussion in Petition Section IX.B.2 regarding light drive circuitry 120 working together with light source 130 asserts that "because they work together … , a POSITA would have understood or … found it obvious to include [light drive circuitry 120] in the same device as the light source [130]," i.e., merely within sensor 102. Petition at 26. The Petition also suggests that "the Board agreed" with its alleged motivation, but based on my review, neither the cited Section IX.B.2 of the Petition nor the '533-FWD cited therein contains any finding by the Board that Lisogurski's light drive circuitry 120 would have been relocated into light source

Omni MedSci Ex. 2118
Samsung Electronics Co. Ltd., et al., v. Omni MedSci - IPR2025-01252

130 based on the alleged motivation that these two components work together. Petition at 25-27; '533-FWD at 22-25. In fact, the portion of the '533-FWD cited by Petition Section IX.B.2 contains no mention of light source 130 in the discussion of modifying Lisogurski by itself, much less discussion of light source 130 and light drive circuitry 120 working together or being combined. '533-FWD at 22-24.

116. Besides the insufficient cite to Section IX.A.2 of Dr. Anthony's declaration, Dr. Anthony cites no other evidence to support this alleged motivation, i.e., that Lisogurski's light drive circuitry 120 and light source 130 working together would allegedly motivate a POSITA to relocate light drive circuitry 120 to within light source 130. Ex. 1003 at ¶ 125 (citing only "Section IX.A.2").

117. Besides the insufficient cite to Petition Section IX.B.2 to support this alleged motivation, Petitioners also cite to Lisogurski for the teaching that "[l]ight drive circuitry 120 turns on/off the 'light source 130' by generating 'light drive signal[s].'" Petition at 31 (citing Ex. 1025 at 10:42-46, 11:28-31, 11:38-41, 11:50-60). But this teaching and those cited disclosures from Lisogurski do not discuss or suggest to a POSITA that light drive circuitry 120 should be relocated to within light source 130. On the contrary, because Lisogurski teaches a light drive signal that is sent or provided from light drive circuitry 120 ***to*** light source 130, a POSITA would have understood based on Lisogurski that light drive circuitry 120 and light source 130 are separate components. Ex. 1025 at 11:28-12:6. A POSITA would have been

Omni MedSci Ex. 2118
Samsung Electronics Co. Ltd., et al., v. Omni MedSci - IPR2025-01252

dissuaded from relocating light drive circuitry 120 to within light source 130 such that light source 130 would effectively send a light drive signal to itself. Ex. 1025 at 11:28-12:6.

118. Second, even assuming that Lisogurski's light drive circuitry 120 and light source 130 working together do constitute a motivation to relocate light drive circuitry 120, then at most, this motivation would lead a POSITA to relocate light drive circuitry 120 to within sensor 102, not specifically within light source 130. Petitioners and Dr. Anthony recognize this because, as explained above, they indicate that this alleged motivation is set forth in Section IX.B.2 of the Petition and Section IX.A.2 of Dr. Anthony's declaration, but as also explained above, those sections of the Petition and declaration assert that a POSITA would have merely relocated light drive circuitry 120 to sensor 102, so those sections of the Petition and declaration thereby assert that the alleged motivation is satisfied by merely relocating light drive circuitry 120 to sensor 102, with no need to relocate it more specifically to within light source 130. Petition at 31 (citing "§IX.B.2" to support alleged motivation), 25-26 (asserting in Section IX.B.2 that light drive circuitry 120 would be relocated to just sensor 102); Ex. 1003 at ¶¶ 125 (citing "Section IX.A.2"), 90, 94-96 (asserting in Section IX.A.2 that light drive circuitry 120 would be relocated to just sensor 102). Similarly, Petitioners assert that "the Board agreed" with their alleged motivation, referring to the '533-FWD, but as explained above,

Omni MedSci Ex. 2118
Samsung Electronics Co. Ltd., et al., v. Omni MedSci - IPR2025-01252

the ’533-FWD merely agreed with relocating Lisogurski’s light drive circuitry 120 to sensor 102, so Petitioners effectively argue that their alleged motivation is satisfied by merely relocating Lisogurski’s light drive circuitry 120 to sensor 102, with no need to relocate it more specifically to light source 130. Petition at 31 (citing “§IX.B.2,” which cites the ’533-FWD, to support alleged motivation); ’533-FWD at 22-23 (asserting that light drive circuitry 120 would be relocated to just sensor 102). Based on my review, Petitioners present no argument or evidence for why the alleged motivation of Lisogurski’s light drive circuitry 120 and light source 130 working together would purportedly motivate a POSITA to further modify Lisogurski to relocate light drive circuitry 120 specifically to within light source 130 rather than just within sensor 102 where light source 130 is located.

119. A POSITA would have understood that to the extent that light drive circuitry 120 and light source 130 working together provide motivation to modify Lisogurski, that motivation is satisfied by relocating light drive circuitry 120 to sensor 102, without further moving it into light source 130. Ex. 1025 at FIG. 1, 10:42-49 (describing that light source 130 is within sensor 102), 11:33-12:6 (describing that light drive circuitry 120 provides the light drive signal to light source 130).

120. Third, in my opinion, Petitioners and Dr. Anthony’s alleged motivation is wrong. Even assuming that Lisogurski’s light drive circuitry 120 and light source

Omni MedSci Ex. 2118
Samsung Electronics Co. Ltd., et al., v. Omni MedSci - IPR2025-01252

130 "operate together to output the electric current applied to the light source [130]," in my opinion, this would not motivate a POSITA to relocate light drive circuitry 120 to within light source 130 as Petitioners and Dr. Anthony argue. Petition at 31; Ex. 1003 at ¶ 125. Instead, if light drive circuitry 120 and light source 130 "operate ***together***" as alleged, then a POSITA would have understood these two components to be separate and distinct. For example, Lisogurski teaches light drive circuitry 120 and light source 130 as two separate components, and that light drive circuitry 120 provides or sends a light drive signal ***to*** light source 130, so a POSITA would not have understood or found it obvious that light drive circuitry 120 would be ***within*** light source 130 such that light source 130 effectively sends a signal to itself. Ex. 1025 at 11:28-12:6, FIG. 1. Petitioners and Dr. Anthony's analyses of limitation [1.b] only discuss Lisogurski's light drive circuitry 120 "generating" the light drive signal and fail to consider Lisogurski's teaching that light drive circuitry 120 sends the light drive signal ***to*** light source 130 and that these two components are therefore separate and distinct. Petition at 31 (only discussing light drive circuitry 120 "generating" the light drive signal, not sending it *to* light source 130); Ex. 1003 at ¶ 125 (same).

Omni MedSci Ex. 2118
Samsung Electronics Co. Ltd., et al., v. Omni MedSci - IPR2025-01252

(4) A POSITA Would Not Have Been Motivated to Modify Lisogurski to Meet the Claim Limitation Regarding "a light source comprising a driver"

121. As explained above, for the portion of claim limitation [1.b] that recites "a light source comprising a driver," Petitioners and Dr. Anthony argue that a POSITA would have modified Lisogurski to relocate light drive circuitry 120 (alleged "driver") to ***within*** light source 130 (alleged "light source"). Petition at 31; Ex. 1003 at ¶ 125. As also explained above, Petitioners and Dr. Anthony do not show that a POSITA would have been motivated to make this alleged modification to Lisogurski. Further, a POSITA would not have been motivated to make this modification to relocate Lisogurski's light drive circuitry 120 to within light source 130 for at least the following reasons.

122. As explained above, Lisogurski teaches that light drive circuitry 120 provides or sends a light drive signal ***to*** light source 130. Ex. 1025 at 11:28-12:6, FIG. 1. This is Lisogurski's only discussion of light drive circuitry 120. A POSITA would have understood light drive circuitry 120 and light source 130 to be separate and distinct components, with no overlap, and would not have been motivated to modify Lisogurski to relocate light drive circuitry 120 to within light source 130. For example, a POSITA would not have understood Lisogurski to teach that a component would send a signal to itself or be motivated to modify Lisogurski in a way that would cause a component to send a signal to itself. Because Lisogurski

Omni MedSci Ex. 2118
Samsung Electronics Co. Ltd., et al., v. Omni MedSci - IPR2025-01252

teaches that the purpose of light drive circuitry 120 is to provide or send a light drive signal ***to*** light source 130, a POSITA would not have relocated light drive circuitry 120 to within light source 130, as Petitioners and Dr. Anthony suggest, because this would cause light source 130 to effectively send a signal to itself. Ex. 1025 at 11:28-12:6. A POSITA would not have made such a modification that would result in a component sending a signal to itself because, for example, such a design would create unnecessary redundancy and inefficiency.

123. Also, a POSITA would not have been motivated to relocate Lisogurski's light drive circuitry 120 to within light source 130 because this would give rise to undesirable heat transfer issues. Ex. 2036; Ex. 1037 at 30-31. Lisogurski recognizes the undesirability of the heating effects caused by light emitters such as light source 130, and Lisogurski expresses a desire to reduce these undesirable heating effects. Ex. 1025 at 1:17-19 (describing desirability of "reduc[ing] heating effects of the emitters"), 3:58-60 (describing a "desir[e] to … reduce heating effects caused by an emitter"), 5:7-9 (describing desirability of "reduc[ing] the impact of heating effects caused by a light source").

124. A POSITA would have understood, including based on Lisogurski's own teachings, that Lisogurski's light source 130 generates heat and that relocating light drive circuitry 120 to within light source 130 would put light drive circuitry 120 at risk of being destroyed or otherwise compromised due to heat generated by

Omni MedSci Ex. 2118
Samsung Electronics Co. Ltd., et al., v. Omni MedSci - IPR2025-01252

and transferred from light source 130. Ex. 2036; Ex. 1037 at 30-31. A POSITA would understand that this heat transfer issue is especially a risk and a concern in this situation where Petitioners and Dr. Anthony rely on embodiments of Lisogurski in which light source 130 emits infrared (IR) light, for oximetry purposes. Petition at 43-47; Ex. 1003 at ¶¶ 128-29, 188, 192, 196, 199-200, 204; Ex. 2036. An LED generates heat during operation. The generated heat is dissipated through conductive and radiative heat transfer. In the case of an infrared (IR) LED for biomeasurements, the radiative heat is in the same spectrum as the IR light and can interfere with the measurement. It is important to manage heat transfer and dissipation from the LED, for example, through conductive heat transfer, to avoid the undesirable effects of radiative heat dissipation. Based on this heat transfer issue and the risk that light drive circuitry 120 may be destroyed or compromised by heat from light source 130 if relocated to within light source 130, a POSITA would have been dissuaded from making this modification or at least would not have been motivated to make this modification.

125. Also, a POSITA would not have been motivated to make this modification because a combined light-source-and-driver would result in, for example, unnecessarily increased cost, complexity, complication, and sourcing and design issues. For example, a POSITA would have generally understood that Lisogurski's light source 130 and light drive circuitry 120 are standard components

Omni MedSci Ex. 2118
Samsung Electronics Co. Ltd., et al., v. Omni MedSci - IPR2025-01252

that are designed and fabricated separately and that integration of light drive circuitry 120 into light source 130 would require more specialized and complicated design and fabrication, including due to the heat issues described above. Indeed, Lisogurski described the light source 130 and light drive circuitry 120 as separate and distinct components and depicted them separately in its system diagram. Ex. 1025 at FIG. 1, 10:42-49, 11:28-32.

b) Relocating Monitor 104 Components into Sensor 102 Would Degrade Signal to Noise Ratio, Contrary to Lisogurski's Objective

126. Dr. Anthony contends that relocating circuitry from Lisogurski's monitor 104 into sensor 102 would improve system performance. He asserts that "[a]dding the front end processing circuity to the sensor would not have negatively impacted the operation of Lisogurski's system." Ex. 1003 at ¶ 100. He further states that "a person of ordinary skill in the art would have understood that integrating the control circuitry, light drive circuitry, and front-end processing circuitry directly with the sensor significantly enhances the system's efficiency by reducing noise, signal degradation, and latency." Ex. 1003 at ¶ 100. He also claims that "[t]he desire to relocate the control circuitry 110, light drive circuitry 120, and front-end processing circuitry 150 from Lisogurski's monitor 104 to the sensor 102 aligns with common practices at the time aimed at improving signal fidelity and reliability." Ex. 1003 at ¶ 101.

Omni MedSci Ex. 2118
Samsung Electronics Co. Ltd., et al., v. Omni MedSci - IPR2025-01252

127. With respect to the claimed "driver" of claim 1, Dr. Anthony opines that Lisogurski's sensor, as modified, "includes a driver ('light drive circuitry 120') that generates a light drive signal (an electrical signal), that controls the light source," even though Lisogurski discloses that "monitor 104 includes control circuitry 110, [and] light drive circuitry 120." Ex. 1003 at ¶ 124 (citing Ex. 1025 at 10:42–46, 11:28–31). He concludes that "[c]ombining driver and control circuitry with the optical sources reduces electrical noise and interference, enhances reliability, simplifies device architecture, and facilitates more efficient manufacturing." Ex. 1003 at ¶ 125.

128. Dr. Anthony also argues that "[a] person of ordinary skill in the art would thus have understood that Lisogurski teaches increasing brightness of the light source (i.e., intensity) preemptively and that an already-generated output signal would have increased signal-to-noise ratio." Ex. 1003 at ¶ 182. In support, Dr. Anthony cites Lisogurski's disclosure that, from an initial light intensity, the "system may increase the brightness of the light sources in response to the noise to improve the signal-to-noise ratio," such that the signal-to-noise ratio of a to-be-capture signal is increased. Ex. 1003 at ¶ 182 (citing Ex 1025 at 9:46-60). Dr. Anthony further relies on Lisogurski's statement that "the system may increase brightness throughout the cardiac cycle because the system may require increased signal amplitudes to differentiate between fiducial and other points of interest related to physiological

Omni MedSci Ex. 2118
Samsung Electronics Co. Ltd., et al., v. Omni MedSci - IPR2025-01252

parameters and those related to noise or motion." Ex. 1003 at ¶ 182 (citing Lisogurski, 9:46-60). Therefore, according to Dr. Anthony, one of Lisogurski's design objectives is to reduce noise of the physiological detection signal. Ex. 1003 at ¶ 182.

129. In my opinion, Dr. Anthony's proposed modification—relocating circuitry from monitor 104 into sensor 102—would predictably degrade the signal-to-noise ratio ("SNR") of Lisogurski's detection signal. Ex. 1003 at ¶¶ 90-107, 124-125. That result is directly contrary to Lisogurski's objective of reducing noise, and demonstrates that a POSITA would not have been motivated to make the proposed modification for any claim requiring such relocation (including claims 1, 8, and 15).

130. In Lisogurski's original architecture, the components of monitor 104—including control circuitry 110, light drive circuitry 120, front end processing circuitry 150, back end processing circuitry 170 (with processor 172 and memory 174), user interface 180, and communication interface 190, and other electronic components—are physically separated from sensor 102, which contains light source 130, and detector 140. Ex. 1025 at FIG. 1, 10:42-49, 11:28-32. This physical separation keeps noise-generating electronic components away from the sensitive optical detector 140.

Omni MedSci Ex. 2118
Samsung Electronics Co. Ltd., et al., v. Omni MedSci - IPR2025-01252

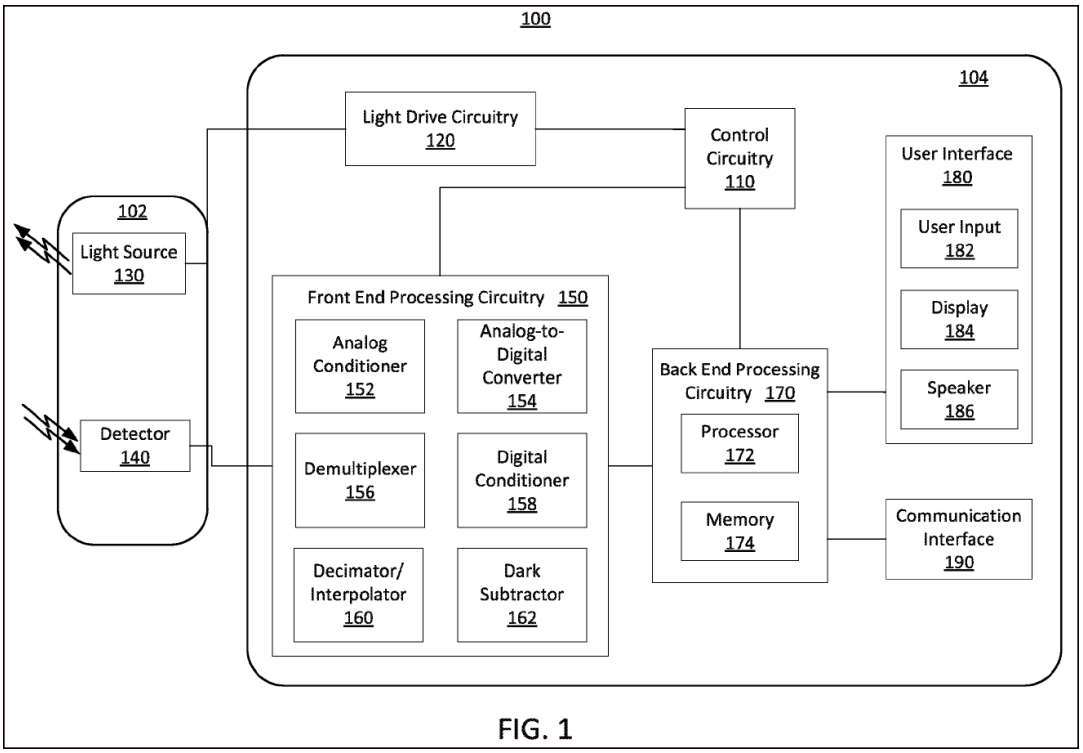

Ex. 1025 at FIG. 1

131. Figure 3 of Lisogurski illustrates an embodiment in which the sensor and monitor remain physically separate. Ex. 1025 at Fig. 3, 17:30-18:15. Lisogurski explains that "system 310 may include sensor unit 312 and monitor 314," where "sensor unit 312 may include … light source 316 [and] detector 318." Ex. 1025 at 17:35–42. Lisogurski further states that "one or more components of physiological monitoring system 310 may include one or more components of physiological monitoring system 100 of FIG. 1," and that "monitor 314 may be implemented as monitor 104 of FIG. 1." Ex. 1025 at 17:32-35, 18:14-15. Thus, consistent with Figure 1, Figure 3 preserves the architecture in which sensing components are

Omni MedSci Ex. 2118
Samsung Electronics Co. Ltd., et al., v. Omni MedSci - IPR2025-01252

located in the sensor unit, while processing and drive circuitry reside in a separate monitor. Ex. 1025 at Fig. 3, 17:30-18:15.

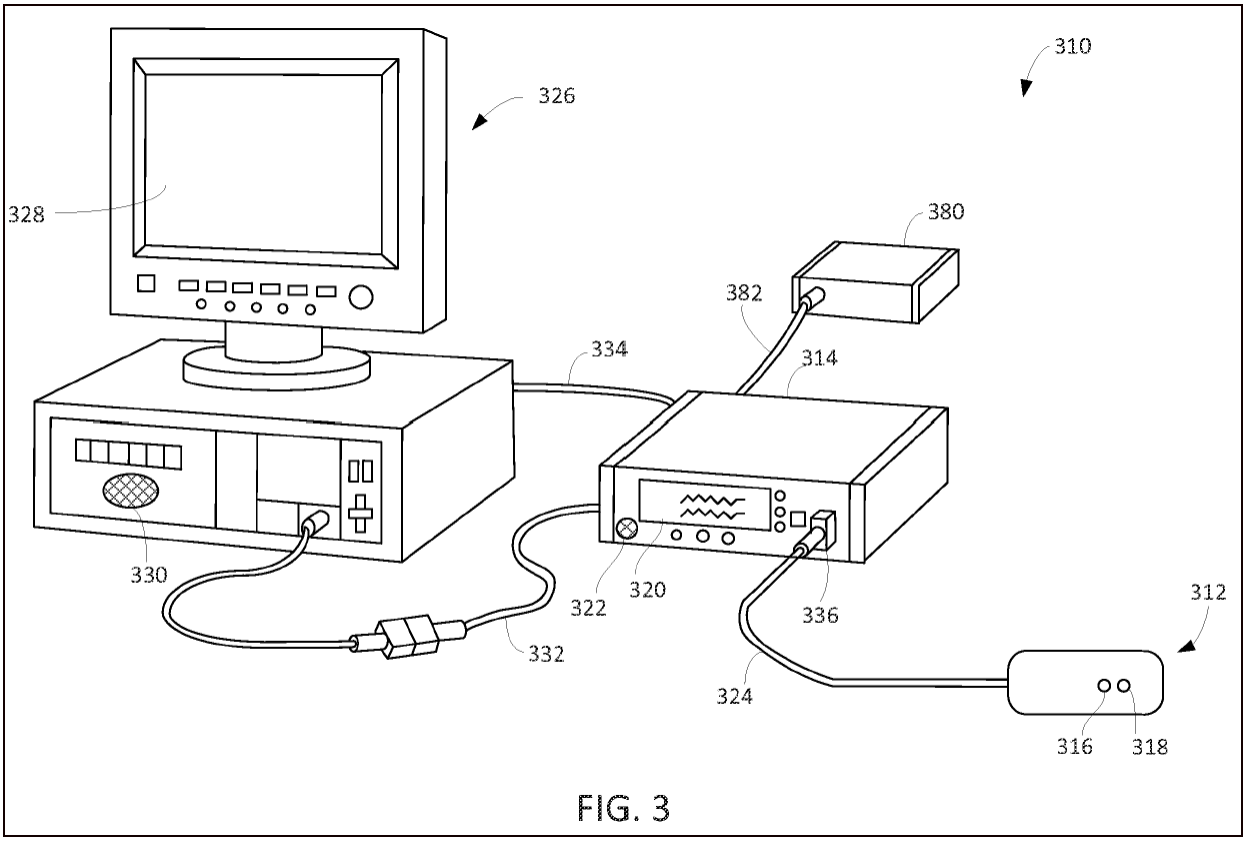

FIG. 3

Ex. 1025 at FIG. 3

132. Relocating the electronic components from monitor 104 into sensor 102 would place those components in closer physical proximity to detector 140. A POSITA would have understood that this closer proximity would introduce additional electrical noise and electromagnetic interference ("EMI") into the detection signal, thereby decreasing the signal-to-noise ratio. Electronic components such as control circuitry 110, light drive circuitry 120, and front-end processing circuitry 150 generate EMI and electrical noise during operation through

Omni MedSci Ex. 2118
Samsung Electronics Co. Ltd., et al., v. Omni MedSci - IPR2025-01252

electromagnetic radiation, conducted noise through shared power and ground planes, and capacitive or inductive coupling between traces on a circuit board.

133. Critically, the noise introduced by relocating monitor 104 components into sensor 102 is fundamentally different from the ambient light noise that Lisogurski's existing noise-reduction techniques are designed to address. Ex. 1025 at 14:46-50. Lisogurski's dark subtraction technique removes ambient light and noise by measuring light when LEDs are off and subtracting that from the measurement when LEDs are on. Ex. 1025 at 16:44-17:10. However, electrical noise and EMI from nearby electronic components would be present during both the "LEDs on" and "LEDs off" measurement periods—so dark subtraction would not remove this noise. A POSITA would have recognized that Lisogurski's existing noise-reduction techniques are not designed to address the type of noise that would be introduced by the proposed modification.

134. The driver is particularly affected by this concern. Relocating light drive circuitry 120 into sensor 102—or into light source 130, as Dr. Anthony argues for limitation [1.b]—would place light drive circuitry, which generates high-current switching signals to drive the LEDs, in close proximity to the sensitive detector 140, which must be in close proximity to light source 130. Ex. 1003, ¶¶ 124-125. High-current switching transients from drive circuitry are a well-known source of noise in pulse oximetry systems. Lisogurski's original architecture separates light drive

Omni MedSci Ex. 2118
Samsung Electronics Co. Ltd., et al., v. Omni MedSci - IPR2025-01252

circuitry 120 (in monitor 104) from detector 140 (in sensor 102) to minimize this coupling. Ex. 1025 at FIG. 1. The proposed modification would undermine this design choice.

135. Dr. Anthony does not address any of these technical consequences in his declaration. He does not analyze (1) the noise and EMI introduced by relocating active circuitry, (2) the inability of Lisogurski's noise-reduction techniques to remove such noise, or (3) the inconsistency between the proposed modification and Lisogurski's express goal of reducing noise. Ex. 1003 ¶¶ 90-107, 124-125. Instead, he offers only generalized assertions about integration benefits, untethered to the specific architecture and constraints of Lisogurski. Ex. 1003 ¶¶ 90-107, 124-125.

136. Accordingly, a POSITA seeking to implement Lisogurski's teachings and preserve its noise reduction focused design would have avoided relocating noise-generating circuitry into the sensor. Dr. Anthony's proposed modification is therefore contrary to the reference's objectives. Ex. 1003 ¶¶ 90-107, 124-125.

c) Lisogurski Does Not Disclose "Three Optical Wavelengths"

137. Independent claim 1 (limitation [1.m]) requires, in part, "three optical wavelengths for measuring at least a portion of the one or more of the physiological parameters." Ex. 1001 at 87:23-25 (claim 1). Based on my analysis below, Dr.

Omni MedSci Ex. 2118
Samsung Electronics Co. Ltd., et al., v. Omni MedSci - IPR2025-01252

Anthony has not shown that Lisogurski discloses three optical wavelengths, and the motivation to combine with LeBoeuf for this limitation fails. Ex. 1003 at ¶ 199-204.

138. Lisogurski discloses embodiments with two wavelengths for its pulse oximetry system. Ex. 1025 at 10:52-58. Lisogurski teaches that "light source 130 may include a Red light emitting light source and an IR light emitting light source, e.g., Red and IR light emitting diodes (LEDs), for emitting light into the tissue of a subject to generate physiological signals. In one embodiment, the Red wavelength may be between about 600 nm and about 700 nm, and the IR wavelength may be between about 800 nm and about 1000 nm." Ex. 1025 at 10:52-58. Lisogurski's pulse oximetry technique is a two-wavelength technique: it works by comparing the absorption of red and infrared light to determine blood oxygen saturation, because "blood with a relatively high blood oxygen saturation … absorb[s] IR light more strongly than red light" and conversely "blood with a relatively low blood oxygen saturation … absorb[s] red light more strongly than infrared light." Ex. 1025 at 24:58-25:5.

139. Dr. Anthony admitted that using three optical wavelengths is a new advancement:

> Q. And what was -- what was the algorithm for measuring blood oxygen saturation? Could you describe it?

Omni MedSci Ex. 2118
Samsung Electronics Co. Ltd., et al., v. Omni MedSci - IPR2025-01252

A. Very similar to what's described here. You know, measuring the -- the ratio of received light. What we're trying to do now, actually, fast-forward a couple of decades is we're using multiple wavelengths to try to disambiguate between all the commercially available physiological -- not all of them, but like a lot of the pulse-ox sensor have an inherent racial bias. They work well for people of our -- with my skin tone. ***And to make it less sensitive to variation in melanin, the skin variation are now using three or four wavelengths in trying to that in a compact form factor.***

But -- so that's been over the last six years we've been working on -- on that. Yeah.

Q. ***So using three or more -- or I think you said three or more wavelengths is more of a recent trend?***

A. We're trying to -- there was a -- I was co-author on a -- I guess I wasn't the author, but I was co-cited in a New York Times article with faculty here that was ***-- really came down hard on the racial disparities in the physiological in -- pulse-ox. So that has led to some internal funding being made available to try to eliminate that complication.***

Ex. 2046 at 391:10-392:13 (emphases added). Dr. Anthony testified that the three-wavelength approach he worked on over the last six years was intended to reduce sensitivity to variation (e.g., melanin-related variation) in a compact oximetry form

Omni MedSci Ex. 2118
Samsung Electronics Co. Ltd., et al., v. Omni MedSci - IPR2025-01252

factor. Ex. 2046 at 391:10-392:13. A POSITA would understand that using three wavelengths is not an arbitrary choice, but a deliberate design approach to improve physiological measurement performance. For example, in physiological optical sensing, a three-wavelength system adds a third wavelength selected at or near an isosbestic point—e.g., a wavelength at which oxygenated hemoglobin and deoxygenated hemoglobin have approximately equal absorption coefficients. At the isosbestic wavelength, the optical signal is substantially insensitive to changes in blood oxygen saturation. This isosbestic signal therefore serves as a built-in reference that reflects only common-mode noise sources (motion, scattering, path-length changes, light-source drift) without being affected by the physiological parameter of interest (oxygen saturation). By normalizing the red and infrared signals against this isosbestic reference, common-mode noise largely cancels out, significantly improving the signal-to-noise ratio and measurement robustness. This is consistent with the dependent claim requirement that "output signal corresponding to at least one of the optical wavelengths is used to improve measurement of at least one of the one or more physiological parameters using the output signal corresponding to the other two optical wavelengths." Ex. 1001 at 87:36-40; 88:51-54; 90:17-21. This is a different measurement approach from the two-wavelength ratio technique used in Lisogurski—it is not merely adding "one more wavelength" but rather introducing a reference-based noise cancellation

Omni MedSci Ex. 2118
Samsung Electronics Co. Ltd., et al., v. Omni MedSci - IPR2025-01252

methodology that requires the deliberate selection of a specific third wavelength based on the spectroscopic properties of hemoglobin.

140. Lisogurski includes a general statement that its light source "may include any number of light sources with any suitable characteristics." Ex. 1025 at 10:58-60; Ex. 1003 at ¶ 199. However, this generic disclosure of "any number of light sources" does not specifically disclose the number of wavelengths. The number of light sources is different from the number of wavelengths: it is possible for multiple light sources to emit the same wavelength. Lisogurski itself teaches this, disclosing that "the light source may include multiple LEDs of the same wavelength." Ex. 1025 at 19:25-31. Therefore, even if Lisogurski's system included more than two LEDs, a POSITA would not necessarily understand that those LEDs would produce three distinct wavelengths.

141. Dr. Anthony relies on LeBoeuf at paragraph [0153] for the disclosure of violet, ultraviolet and green light. Ex. 1003 at ¶ 201; Ex. 1026 at [0153]. However, LeBoeuf paragraph [0153] discusses wavelength characteristics in the context of LeBoeuf's earbud device and the "skin of the ear"—not a non-earbud pulse oximetry sensor like Lisogurski. Ex. 1026 at [0153]. The passage describes different wavelength ranges for different, incompatible purposes (violet/UV for motion-related data, green/red/IR for blood vessel detection, blue for blood vessel size)—it

Omni MedSci Ex. 2118
Samsung Electronics Co. Ltd., et al., v. Omni MedSci - IPR2025-01252

does not teach combining any three specific wavelengths for measuring physiological parameters. Ex. 1026 at [0153].

142. Dr. Anthony also relies on Ex. 1033 (Lamego) at paragraphs [0033]-[0037] for the proposition that "adding wavelengths sensitive to additional significant absorbers can help the system compensate for the additional significant absorbers." Ex. 1003 at ¶ 203; Ex. 1033 at [0035]. However, Lamego is a separate reference from Lisogurski, and Lisogurski itself does not disclose or suggest using three wavelengths. Lamego is not part of any ground of unpatentability (Petition at 8; Ex. 1003 at ¶70), and its "underdetermined system" teaching does not apply to Lisogurski's two-wavelength system measuring only blood oxygen saturation using two absorbers (oxy- and deoxy-hemoglobin). Ex. 1033 at [0035]. Dr. Anthony's declaration does not explain what specific physiological parameter or blood constituent would be measured by the third wavelength that is not already measured by Lisogurski's red and IR wavelengths. Ex. 1003 at ¶¶ 197-204.

2. Independent Claim 8

143. I disagree with Petitioners and Dr. Anthony's assertion that claim 8 is obvious over Lisogurski.

144. Claim 8 includes limitations [8.a]-[8.b] that together recite, in part, "a wearable device … including a light source comprising a driver and a plurality of semiconductor sources that are light emitting diodes." Ex. 1001 at 87:62-65; Petition

Omni MedSci Ex. 2118
Samsung Electronics Co. Ltd., et al., v. Omni MedSci - IPR2025-01252

at xi. In particular, a portion of limitation [8.b] recites "a light source ***comprising*** a driver," which is also recited by limitation [1.b]. Ex. 1001 at 87:63 (emphasis added), 86:46-47; Petition at xi, viii.

145. For limitation [8.b], Petitioners and Dr. Anthony rely on their analysis of limitation [1.b], and they do not separately analyze limitation [8.b] regarding the claim limitation of "a light source comprising a driver." Petition at 47; Ex. 1003 at ¶¶ 211-14. For limitation [8.b], Petitioners and Dr. Anthony do not address any of the aforementioned deficiencies regarding Lisogurski in relation to limitation [1.b]. Petition at 47; Ex. 1003 at ¶¶ 211-14.

146. Therefore, Lisogurski does not teach or render obvious the portion of limitation [8.b] that recites "a light source comprising a driver" for at least the same reasons explained in Section X.A.1.a above with respect to limitation [1.b].

147. Additionally, I disagree that claim 8 is obvious over Lisogurski for the same reasons explained in Section X.A.1.b above regarding my opinion that relocating Lisogurski's monitor 104 components into sensor 102 would degrade signal to noise ratio, contrary to Lisogurski's objective.

148. Moreover, I disagree that claim 8 is obvious for the following reason.

Omni MedSci Ex. 2118
Samsung Electronics Co. Ltd., et al., v. Omni MedSci - IPR2025-01252

a) Neither Lisogurski Nor LeBoeuf Discloses "Six Light Emitting Diodes" (Claim 8)

149. Claim 8 (specifically, limitation [8.m]) also recites "wherein the plurality of semiconductor sources comprises six light emitting diodes." Ex. 1001 at 88:38-39.

150. Dr. Anthony agreed that “six light-emitting diodes” is a new limitation not addressed by the prior '484 and '533 IPR decisions:

> Q. And so the requirement of six light-emitting diodes is a new limitation relative to the prior '484 and '533 IPRs. Correct?
>
> A. Correct.

Ex. 2046 at 310:22-25.

151. The ’455 patent specification specifically depicts an embodiment with six light-emitting diodes in FIG. 18B. Ex. 1001 at FIG. 18B.

Omni MedSci Ex. 2118
Samsung Electronics Co. Ltd., et al., v. Omni MedSci - IPR2025-01252

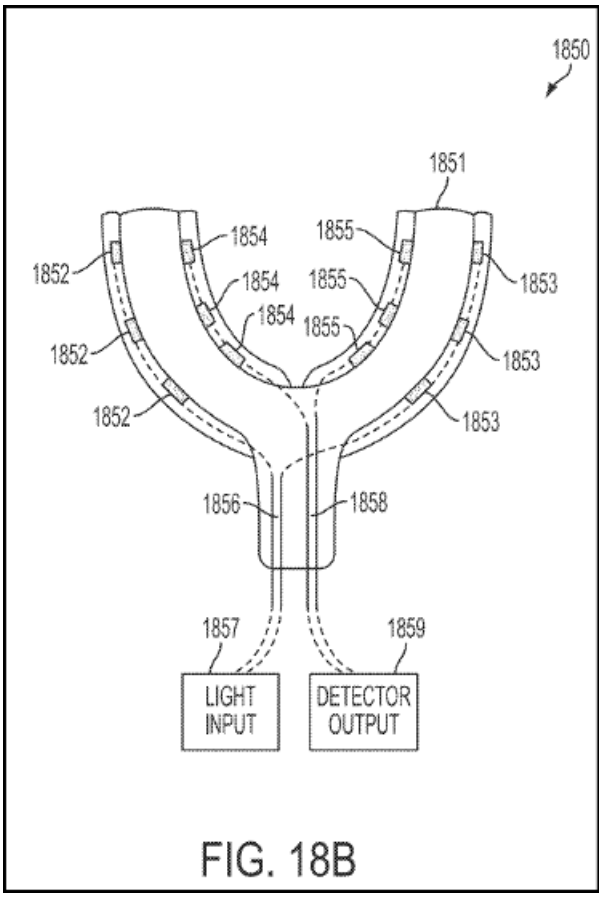

FIG. 18B

Ex. 1001 at FIG. 18B

152. The ’455 Patent explains that:

Similar to the clamp design describe above, the light source inputs 1852, 1853 may comprise one or more light sources directly, or they may have light guided to them from an external light source. Also, the light source inputs 1852, 1853 may comprise lens systems to collimate or focus the light across the teeth. The detector outputs 1854, 1855 may comprise one or more detectors directly, or they may have one or more light guides to transport the signals to an external detector element. The light source inputs 1852, 1853 may be coupled electrically or optically through 1856 to a light input 1857. For example, if the light source is external in 1857, then the one or more coupling elements 1856 may be one or more light guides, such as a fiber optic. Alternately, if the light sources are contained in 1852, 1853, then the coupling element 1856 may be one or more electrical wires connecting to a power supply in

Omni MedSci Ex. 2118
Samsung Electronics Co. Ltd., et al., v. Omni MedSci - IPR2025-01252

> 1857. Similarly, the detector outputs 1854, 1855 may be coupled to a detector output unit 1859 with one or more coupling elements 1858, which may be one or more electrical wires or one or more light guides, such as a fiber optic. This is just one example of a mouth guard design covering a plurality of teeth, but other embodiments may also be used and are intended to be covered by this disclosure.

Ex. 1001 at FIG. 18B, 28:28-50. From the disclosure of the ’455 Patent specification, a person of ordinary skill in the art would understand that the use of six LEDs provides the technical advantage of increasing the probability that emitted light will illuminate blood vessels within the tissue—a requirement for accurate physiological measurement. At wearable device measurement sites such as the wrist or teeth (Ex. 1001 at 8:31-34), the microvasculature is not uniformly distributed beneath the skin surface. Six spatially distributed LEDs illuminate the tissue from six distinct locations, substantially increasing the statistical probability that at least some of the emitted light will pass through or reflect from a region with adequate blood vessel density to produce a measurable physiological signal. In addition, using six LEDs provides sufficient redundancy for each wavelength used without reducing LED efficiency. For example, when a system uses three distinct wavelengths—as required by claims 1, 10, and 16—six LEDs provide exactly two LEDs per wavelength. This two-per-wavelength pairing is not an arbitrary selection; it provides meaningful redundancy for each wavelength channel while maintaining system efficiency. Ex. 1001 at 87:23-25 (claim 1), 88:42-45 (claim 10), 88:51-54 (claim 16).

Omni MedSci Ex. 2118
Samsung Electronics Co. Ltd., et al., v. Omni MedSci - IPR2025-01252

153. For this claim element, Dr. Anthony relies on Lisogurski's use of generic terms like "one or more," "multiple," and "any number" of LEDs. Ex. 1003 at ¶ 250. Based on my review, Lisogurski does not disclose the specific requirement that the plurality of semiconductor sources comprises six light emitting diodes. Lisogurski teaches that its light source "may include any number of light sources with any suitable characteristics," "multiple light sources," "may be one or more LEDs," and that "the light source may include LEDs of multiple wavelengths, for example, a red LED and an IR LED. In some embodiments, the light source may include multiple LEDs of the same wavelength, multiple LEDs of different wavelengths, any other suitable arrangement, or any combination thereof." Ex. 1025 at 10:58-60, 17:43-45, 19:22-31. These generic disclosures of "one or more," "multiple," and "any number" do not expressly disclose six. The only specific embodiment described in Lisogurski uses two LEDs—one red and one infrared. Ex. 1025 at 10:52-56.

154. Lisogurski's stated objectives counsel against using six LEDs. Lisogurski is entitled "Methods and Systems for Power Optimization in a Medical Device" and is directed to reducing power consumption and minimizing heating effects. Ex. 1025 at Title, 1:10-25. Lisogurski teaches that "reducing power consumption may allow for increased battery life in portable systems or increased portability." Ex. 1025 at 1:16-18. It also explains that "it may be desirable to reduce

Omni MedSci Ex. 2118
Samsung Electronics Co. Ltd., et al., v. Omni MedSci - IPR2025-01252

the power consumption of the light source, while still enabling high quality physiological parameters to be determined," Ex. 1025 at 3:50-53. And it teaches that "varying light output during a cardiac cycle may reduce heating effects of the emitters" (Ex. 1025 at 1:17-19). Lisogurski further expressly states a "desir[e] to reduce the power consumption by the light drive signal to reduce heating effects caused by an emitter." Ex. 1025 at 3:58-60. These disclosures align with Lisogurski's stated system objectives.

155. Tripling the number of LEDs from the two disclosed in Lisogurski to the claimed six would cut against Lisogurski's stated objectives. Ex. 1025 at 1:10-25, 3:50-60. Increasing the LED count would increase power consumption, which would undermine Lisogurski's power-optimization goal. It would also increase heat generation, contrary to Lisogurski's express aim to reduce heating effects. Increasing the LED count would further increase signal-processing complexity. Lisogurski's drive-cycle modulation sequences LEDs with intervening dark periods (Ex. 1025 at 12:16–41), and adding four additional LEDs would require additional drive periods, dark periods, and corresponding processing for each wavelength. More LEDs would also tend to increase sensor size, conflicting with Lisogurski's portability objective. Ex. 1025 at 1:15-18. Consistent with these objectives, Lisogurski teaches techniques intended to minimize the number and brightness of LEDs operating at any given time, including "operat[ing] a first light source at full or regular brightness, while

Omni MedSci Ex. 2118
Samsung Electronics Co. Ltd., et al., v. Omni MedSci - IPR2025-01252

operating one or more additional light sources in a switched or otherwise modulated mode" to save power. Ex. 1025 at 7:38–8:3. A POSITA reading Lisogurski would understand the disclosed system is optimized for fewer LEDs, not more, and would not be motivated to triple the LED count from two to six.

156. For the claim limitation "wherein the plurality of semiconductor sources and the plurality of spatially separated detectors are located on one or more arcs" in the claims 2, 9 (dependent on claim 8) and 15, Dr. Anthony relies on LeBoeuf's Figure 8B as depicting multiple emitters 24. Ex. 1003 at ¶ 259; Ex. 1001 at 87:27-32, 88:38-42, 90:6-10. However, LeBoeuf's Figure 8B shows only four LEDs. Ex. 1026 at FIG. 8B. LeBoeuf's paragraph [0123] describes "[v]arious configurations and arrangements of optical emitters and detectors" that "may be utilized," without specifying any particular number of emitters. Ex. 1026 at [0123].

157. Dr. Anthony relies on Ex. 1033 (Lamego) at paragraphs [0035] and [0041] as disclosing a sensor with "four, six, eight or sixteen LEDs of different wavelengths." Ex. 1003 at ¶ 252; Ex. 1033 at [0035], [0041]. However, I note that Lamego is not cited as a prior art reference in any ground of unpatentability in the Petition. Petition at 8; Ex. 1003 at ¶ 71.

158. Lamego is entitled "Multiple-Wavelength Physiological Monitor" and discloses a multi-wavelength system designed to measure "various physiologically-related parameters" including "noise, motion, various hemodynamic parameters,

Omni MedSci Ex. 2118
Samsung Electronics Co. Ltd., et al., v. Omni MedSci - IPR2025-01252

and/or blood constituent concentrations and/or levels." Ex. 1033 at Title, [0035]. Lamego's system uses "four, six, eight or sixteen LEDs of different wavelengths" to address the problem that "when only two wavelengths are used but there are more than two significant absorbers in the patient's tissue, the system may be underdetermined." Ex. 1033 at [0035], [0041]. Lamego's system is designed for multi-constituent spectral analysis—a different measurement task than Lisogurski's single-parameter pulse oximetry. The "underdetermined" problem described in Lamego—"when only two wavelengths are used but there are more than two significant absorbers" (Ex. 1033 at [0035])—does not arise in Lisogurski's system because Lisogurski is designed to measure only two absorbers. Dr. Anthony does not explain why Lisogurski's system is "underdetermined" or identify any "additional significant absorbers" that would necessitate additional wavelengths. Ex. 1003 at ¶¶ 199-204. Dr. Anthony's declaration does not explain why a POSITA would have a motivation to combine Lisogurski and/or LeBoeuf and Lamego. Ex. 1003 at ¶¶ 199-204, 248-252. Dr. Anthony also does not explain why a POSITA would have chosen six LEDs over other numbers, nor does it identify any technical reason or advantage for using specifically six LEDs in a pulse oximetry system. Ex. 1003 at ¶¶ 199-252.

Omni MedSci Ex. 2118
Samsung Electronics Co. Ltd., et al., v. Omni MedSci - IPR2025-01252

3. Dependent Claim 11

159. I disagree with Petitioners and Dr. Anthony's assertion that claim 11 is obvious over Lisogurski.

160. Claim 11 depends from independent claim 8. Petitioners and Dr. Anthony's analysis of claim 11 focuses on the additional limitations of claim 11 and does not address any of the deficiencies regarding Lisogurski in relation to claim 8. Petition at 49-51; Ex. 1003 at ¶¶ 253-57.

161. Therefore, Lisogurski does not render obvious claim 11 for at least the same reasons explained in Section X.A.2 above with respect to independent claim 8.

162. Also, I disagree that claim 11 is obvious for the following reason.

a) Lisogurski Does Not Show "Output Signal Corresponding to At Least One of the Optical Wavelengths Is Used to Improve Measurement of the One or More Physiological Parameters Using the Output Signal Corresponding to the Other Two Optical Wavelengths" (Claim 11)

163. Claim 11 recites "wherein the output signal corresponding to at least one of the optical wavelengths is used to improve measurement of the one or more physiological parameters using the output signal corresponding to the other two optical wavelengths." Ex. 1001 at 88:51-54.

164. This limitation necessarily requires at least three optical wavelengths—one wavelength whose output signal is used to improve measurement, and "the other

Omni MedSci Ex. 2118
Samsung Electronics Co. Ltd., et al., v. Omni MedSci - IPR2025-01252

two optical wavelengths." Ex. 1001 at 87:36-40. Because the limitation refers to "at least one of the optical wavelengths" and "the other two optical wavelengths," claims 11 necessarily presupposes at least three wavelengths. Petitioners and Dr. Anthony's analysis of claim 11 does not address any of the aforementioned deficiencies regarding Lisogurski in relation to claim limitation [1.m].

165. As I explain above, Lisogurski discloses embodiments of two wavelengths—red and infrared. Ex. 1025 at 10:49-58. If Lisogurski does not disclose three wavelengths, then Lisogurski cannot disclose using one wavelength's output signal to improve measurement using "the other two optical wavelengths"—because there are no "other two." The predicate for this claim limitation—three wavelengths—is absent from Lisogurski.

166. Dr. Anthony's analysis of this limitation in his declaration presupposes the existence of three wavelengths in Lisogurski. Ex. 1003 at ¶¶ 255-257. For example, Dr. Anthony cites Lisogurski's disclosure that "blood with a relatively high blood oxygen saturation … absorb[s] IR light more strongly than red light" and "blood with a relatively low blood oxygen saturation … absorb[s] red light more strongly than infrared light." Ex. 1025 at 24:58-25:5; Ex. 1003 at ¶ 256. But this cited language only discusses two wavelengths—red and infrared—and does not disclose a third wavelength or any improvement using a third wavelength. Ex. 1025 at 24:58-25:5.

Omni MedSci Ex. 2118
Samsung Electronics Co. Ltd., et al., v. Omni MedSci - IPR2025-01252

167. Lisogurski also states that "blood with a high blood oxygen saturation may … result[] in higher IR sensitivity" and "blood with a low blood oxygen saturation may … result[] in higher red sensitivity." Ex. 1025 at 24:58-25:5. The cited language further states: "Thus, it may be desired to monitor activity with the more sensitive available wavelength." Ex. 1025 at 24:58-25:5. These sentences discuss switching between the two existing wavelengths based on sensitivity—not using a third wavelength to improve measurement using the other two. Ex. 1025 at 24:58-25:5.

168. Lisogurski is expressly a two-wavelength pulse oximetry system (red and infrared), and thus does not use an output signal from "other multiple (e.g., two or more) optical wavelengths" to improve measurement, as Dr. Anthony asserts. Ex. 1003 at ¶¶ 255–257. The premise of his argument requires additional wavelengths beyond the two used in Lisogurski. Accordingly, there is no disclosure in Lisogurski of using one wavelength's output to improve measurements based on "other" wavelengths, nor any explanation from Dr. Anthony as to how such a technique would be implemented within a disclosed two-wavelength framework. Ex. 1003 at ¶¶ 255–257.

169. Even if Lisogurski did suggest output signals corresponding to three different wavelengths, Lisogurski does not teach the recited operation of improving the measurement of physiological parameters with the output signal corresponding

Omni MedSci Ex. 2118
Samsung Electronics Co. Ltd., et al., v. Omni MedSci - IPR2025-01252

to at least one of the wavelengths by using the output signals corresponding to the other two wavelengths. Dr. Anthony does not show that this particular operation is disclosed or taught by Lisogurski. In paragraph 256 of his report, Dr. Anthony merely asserts that "[i]n summary, Lisogurski discloses the use of multiple light sources—that emit wavelengths of light selected to complement one another in sensitivity to the physiological parameters being measured—as well as multiple detectors that generate multiple output signals." Ex. 1003 at ¶ 256. Even if true, this assertion does not address the recited operation of using output signals corresponding to two wavelengths to improve the measurement by an output signal corresponding to a third wavelength.

170. Paragraph 257 of Dr. Anthony's report also does not address the recited operation involving output signals corresponding to three different wavelengths. The first two sentences of Dr. Anthony's paragraph 257 merely asserts that "the detectors of Lisogurski's system output signals that each correspond to at least one of the wavelengths" because the "detectors … receive … light at specific wavelengths." Ex. 1003 at ¶ 257. But this assertion does not address the recited operation of improving the measurement of one output signal by using output signals corresponding to two different wavelengths. The third sentence of Dr. Anthony's paragraph 257 refers to his discussion of limitation [1.m] and asserts that "Lisogurski's use of multiple wavelengths" is "to enable the measurement of a

Omni MedSci Ex. 2118
Samsung Electronics Co. Ltd., et al., v. Omni MedSci - IPR2025-01252

broader range of physiological parameters, and … to improve the accuracy of those measurements." Ex. 1003 at ¶ 257. But this assertion includes no explanation or cited support regarding *how* Lisogurski purportedly "improve[s]" the accuracy of any measurement, much less that Lisogurski teaches the recited operation of improving the measurement of an output signal corresponding to a first wavelength by using output signals corresponding two other wavelengths. *Id*. And while the third sentence references Dr. Anthony's discussion for limitation [1.m], that discussion also fails to address this recited operation involving three output signals, including because neither limitation [1.m] nor Dr. Anthony's discussion of limitation [1.m] contains any mention of an "output signal." *See* Ex. 1003 at ¶¶ 197-204 (regarding limitation [1.m]). The fourth sentence of Dr. Anthony's paragraph 257 asserts that "[t]o this end, a [POSITA] would have understood that Lisogurski includes an output signal corresponding to at least one of the optical wavelengths to improve measurement of the one or more physiological parameters based on the output signal corresponding to the other (multiple more) optical wavelengths." Ex. 1003 at ¶ 257. But this conclusory fourth sentence merely parrots the claim language and provides no explanation or cited support from Lisogurski as to why or how a POSITA would have purportedly "understood" Lisogurski to teach this recited operation involving three output signals each corresponding to three different wavelengths, especially when Lisogurski does not even teach an embodiment that

Omni MedSci Ex. 2118
Samsung Electronics Co. Ltd., et al., v. Omni MedSci - IPR2025-01252

uses specifically three wavelengths. *Id.* Indeed, the only alleged support that Dr. Anthony cites for this fourth sentence is a completely different reference, i.e., Lamego (Ex. 1033), with no explanation of how the quoted portions of Lamego purportedly relate to any particular teachings in Lisogurski. The fifth and final sentence in Dr. Anthony's paragraph 257 is another conclusory assertion that a POSITA would have "understood" or "at least found obvious" that Lisogurski performs the recited operation, with no explanation or cited support from Lisogurski. Ex. 1003 at ¶ 257.

171. Additionally, while Dr. Anthony attempts to bridge this gap by citing Lamego (Ex. 1033 [0033]–[0037]), but that reliance only underscores the defect in his reasoning. Lamego discusses multi-wavelength systems and explains that "when only two wavelengths are used but there are more than two significant absorbers in the patient's tissue, the system may be underdetermined." Ex. 1033 at [0035]. Dr. Anthony provides no evidentiary or technical basis for asserting that Lisogurski's two-wavelength system is underdetermined or would require the type of multi-wavelength correction described in Lamego. Ex. 1003 at ¶¶ 255–257.

172. Dr. Anthony does not articulate any reason why a person of ordinary skill would have been motivated to modify Lisogurski to incorporate Lamego's multi-wavelength approach, nor does he address the technical changes such a modification would require. See Ex. 1003 at ¶ 257. Indeed, Dr. Anthony's analysis

Omni MedSci Ex. 2118
Samsung Electronics Co. Ltd., et al., v. Omni MedSci - IPR2025-01252

of the claim limitation (Ex. 1003 at ¶¶ 255–257) involves only a single citation to Lamego, with over a page of quotes from Lamego but no discussion of Lamego's teachings, much less any explanation of how Lamego's teachings purportedly relate to any particular teachings in Lisogurski. Ex. 1003 at ¶ 257.

B. Ground 2: Obviousness Based on Lisogurski and LeBoeuf (Claims 2-4, 9-10, and 15-17)

173. I understand that Petitioners and Dr. Anthony argue for Ground 2 that claims 2-4, 9-10, and 15-17 of the '455 Patent are obvious over Lisogurski and LeBoeuf. Petition at 8, 51-60; Ex. 1003 at ¶¶ 71, 258-355. I disagree for at least the reasons provided below.

1. Dependent Claim 2

174. I disagree with Petitioners and Dr. Anthony's assertion that claim 2 is obvious over Lisogurski and LeBoeuf.

175. Claim 2 depends from independent claim 1. Petitioners and Dr. Anthony's analysis of claim 2 focuses on the additional limitations of claim 2 and does not address any of the deficiencies regarding Lisogurski in relation to claim 1. Petition at 55-57; Ex. 1003 at ¶¶ 270-79. Petitioners and Dr. Anthony's analysis of claim 2 does not rely on LeBoeuf to cure the deficiencies regarding Lisogurski in relation to claim 1. Petition at 55-57; Ex. 1003 at ¶¶ 270-79.

Omni MedSci Ex. 2118
Samsung Electronics Co. Ltd., et al., v. Omni MedSci - IPR2025-01252

176. Therefore, Lisogurski and LeBoeuf do not render obvious claim 2 for at least the same reasons explained in Section X.A.1 above with respect to independent claim 1.

177. Additionally, Lisogurski and LeBoeuf do not render obvious the limitations recited in claim 2.

178. Similar to limitation [8.m] of claim 8, claim 2 recites "wherein the plurality of semiconductor sources comprises six light emitting diodes." Ex. 1001 at 87:27-28. Petitioners and Dr. Anthony's analysis of claim 2 does not address any of the aforementioned deficiencies regarding Lisogurski in relation to this limitation in claim 8 or rely on LeBoeuf to fix those deficiencies. Petition at 55-57; Ex. 1003 at ¶¶ 270-79. Therefore, Lisogurski and LeBoeuf do not render obvious claim 2 for at least the same reasons explained in Section X.A.2.a above with respect to limitation [8.m] of claim 8.

179. Also, I understand that claim 2 of the '455 patent recites, in part, "wherein the plurality of semiconductor sources and the plurality of spatially separated detectors are located on one or more ***arcs***," which I refer to herein as the "arc limitation." Ex. 1001 at 87:29-31 (emphasis added); Petition at x (in "List of Challenged Claims"). Based on my review, Petitioners and Dr. Anthony rely on Lisogurski's disclosure of a sensor with multiple LEDs and detectors for the claimed "semiconductor sources" and "spatially separated detectors," respectively. Petition

Omni MedSci Ex. 2118
Samsung Electronics Co. Ltd., et al., v. Omni MedSci - IPR2025-01252

at 30-31, 34-35, 55; Ex. 1003 at ¶¶ 119-23, 155-61, 272. As Petitioners and Dr. Anthony recognize, however, Lisogurski alone does not disclose any specific arrangement of its LEDs or detectors, such as arranging its LEDs and detectors in "one or more arcs" as recited in claim 2. Petition at 55-57; Ex. 1003 at ¶¶ 270-79.

180. Dr. Anthony admitted that he does not rely on just Lisogurski to disclose detectors or emitters arranged along an arc:

> Q. Right. Because ***Lisogurski doesn't explicitly disclose detectors arranged along an arc***. Correct?
>
> …
>
> THE WITNESS: Again, my opinions are demonstrating how Lisogurski, in combination with LeBoeuf, meet the limitation. ***I was not relying on just Lisogurski***. Lisogurski and LeBoeuf.

Ex. 2045 at 161:25-162:6 (emphases added; internal objections omitted).

> Q. And when you refer to the combination, you're relying on a combination because ***Lisogurski by itself doesn't expressly disclose emitters arranged along an arc***. Correct?
>
> …
>
> THE WITNESS: When going back to my motivations to combine, I describe why Lisogurski in -- is -- and LeBoeuf are in the same field and why LeBoeuf would solve, working together, pertinent problems, having a circular arc to

Omni MedSci Ex. 2118
Samsung Electronics Co. Ltd., et al., v. Omni MedSci - IPR2025-01252

address -- to absorb more of the light that's scattered through the absorption. ***And in forming my opinions here, I was not, as you point out, relying just on Lisogurski***, but Lisogurski, in combination with LeBoeuf.

Ex. 2045 at 163:11-24 (emphases added; internal objections omitted).

181. Petitioners and Dr. Anthony instead rely on LeBoeuf, arguing that LeBoeuf's Figure 8B allegedly shows optical emitters 24 and optical detectors 26 arranged in two respective arcs (which I refer to herein as the "alleged arc arrangement" in LeBoeuf) and further arguing that "a POSITA would have been motivated to apply LeBoeuf's arc arrangements to Lisogurski's system." Petition at 56-57 (citing "§IX.C.2" of the Petition), 52-55 (i.e., §IX.C.2: "Motivation to Combine Lisogurski and LeBoeuf"); Ex. 1003 at ¶¶ 270, 273-276 (citing "§IX.B.2" of the Dr. Anthony's declaration), 279, 261-68 (i.e., Section IX.B.2: "Motivation to Combine Lisogurski and LeBoeuf").

182. Petitioners and Dr. Anthony's argument includes the following annotated version of LeBoeuf's Figure 8B purporting to show this alleged arc arrangement in LeBoeuf:

Omni MedSci Ex. 2118
Samsung Electronics Co. Ltd., et al., v. Omni MedSci - IPR2025-01252

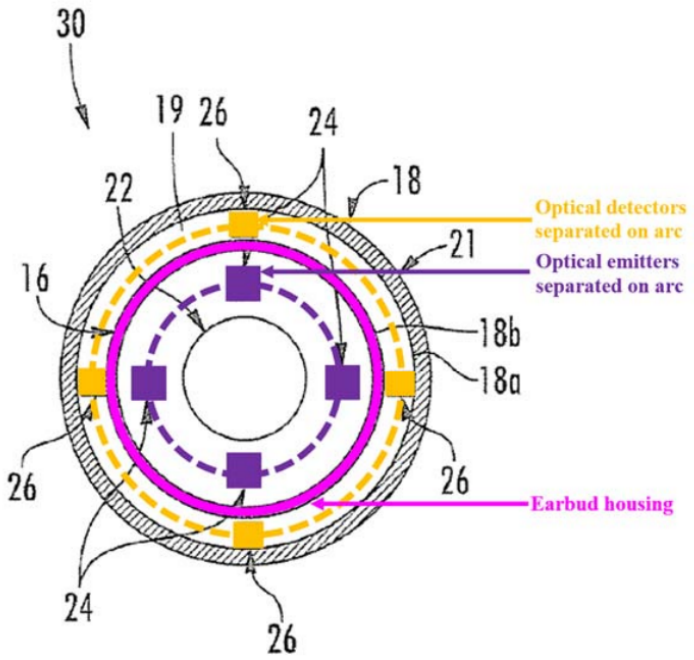

FIG. 8B

Petition at 57; Ex. 1003 at ¶ 275. I note that this embodiment depicted in LeBoeuf's Figure 8B is also the same embodiment depicted in LeBoeuf's Figure 8A. Ex. 1026 at FIGS. 8A-8B, [0048]-[0049], [0123].

183. Lisogurski and LeBoeuf do not render obvious the arc limitation of claim 2, including because (i) Petitioners and Dr. Anthony do not show that a POSITA would have been motivated to implement LeBoeuf's alleged arc arrangement in Lisogurski, and (ii) a POSITA would not have been motivated to implement LeBoeuf's alleged arc arrangement in Lisogurski.

a) Previous IPRs Regarding Related Patents

184. I understand that certain portions of the Petition and Dr. Anthony's declaration rely on findings by the Board in prior IPR proceedings challenging

Omni MedSci Ex. 2118
Samsung Electronics Co. Ltd., et al., v. Omni MedSci - IPR2025-01252

patents related to the ’455 Patent, including the ’533-FWD and ’484-FWD. However, the arc limitation of claim 2 of the ’455 Patent is not recited in the claims of either the ’533 Patent or ’484 Patent. Ex. 1081; Ex. 1082.

185. Petitioners and Dr. Anthony do not rely on the ’533-FWD or ’484-FWD in their analysis of claim 2. *See* Petition at 55-57; Ex. 1003 at ¶¶ 270-79; Ex. 1081; Ex. 1082. Therefore, I understand that to the extent that Petitioners and Dr. Anthony rely on the Board’s findings in the ’533-FWD and ’484-FWD, those prior findings do not address the arc limitation in claim 2 of the ’455 Patent.

186. Dr. Anthony agreed that none of the claims of the ’533 Patent or ’484 Patent recite the word “arc”:

> Q. The -- none of the claims in the ’533 patent recite the word “arc.” Correct?
>
> A. I agreed with you and then I went on to explain how I did not address it. In the ’533, “arc” is not expressed there. …
>
> Q. Now, none of the claims in the ’484 patent that were subject to the prior decision recite an arc. Correct?
>
> Are you reviewing the ’484 patent?
>
> A. I am.
>
> Again, I was not addressing, in the ’48 -- prior ’484, the ’533, issues with the -- associated with arc.

Ex. 2045 at 156:22-157:12.

Omni MedSci Ex. 2118
Samsung Electronics Co. Ltd., et al., v. Omni MedSci - IPR2025-01252

b) LeBoeuf's Alleged Disclosure of the Arc Limitation

187. Evan assuming that LeBoeuf's alleged arc arrangement meets the arc limitation of claim 2, as explained below, the combination of Lisogurski and LeBoeuf does not render obvious this arc limitation, at least because a POSITA would not have been motivated to apply LeBoeuf's alleged arc arrangement in Lisogurski.

c) Petitioners and Dr. Anthony Do Not Show that a POSITA Would Have Been Motivated to Implement LeBoeuf's Alleged Arc Arrangement in Lisogurski to Meet the Arc Limitation

188. For the arc limitation in claim 2 that recites "wherein the plurality of semiconductor sources and the plurality of spatially separated detectors are located on one or more arcs," Petitioners and Dr. Anthony argue that a POSITA would have applied the alleged arc arrangement of optical emitters 24 and optical detectors 26 in LeBoeuf's Figure 8B to arrange the LEDs and detectors in Lisogurski's sensor to meet this limitation. Petition at 55-57 (relying on an annotated version of LeBoeuf's Figure 8B and asserting that a POSITA would have "appl[ied] LeBoeuf's [arc arrangement] to Lisogurski's system"); Ex. 1003 at ¶¶ 270-79 (same).

189. Petitioners and Dr. Anthony do not show, with sufficient explanation or supporting evidence, that a POSITA would have been motivated to implement

Omni MedSci Ex. 2118
Samsung Electronics Co. Ltd., et al., v. Omni MedSci - IPR2025-01252

LeBoeuf's alleged arc arrangement of optical emitters 24 and optical detectors 26 to arrange Lisogurski's sensor's LEDs and detectors.

190. I understand that the Petition addresses motivation to combine LeBoeuf's alleged arc arrangement with Lisogurski's system in a single paragraph in Section IX.C.2. Petition at 52-53. The Petition's analysis of claim 2 addresses motivation to combine LeBoeuf and Lisogurski in only a single sentence that refers to the one relevant paragraph in Section IX.C.2. Petition at 57 (stating "***[a]s discussed (§IX.C.2)***, a POSITA would have been motivated to apply LeBoeuf's arc arrangements to Lisogurski's system" (emphasis added)).

191. Dr. Anthony addresses motivation to combine LeBoeuf's alleged arc arrangement with Lisogurski's system in only two paragraphs of Section IX.B.2. Ex. 1003 at ¶¶ 262-63. Dr. Anthony's analysis of claim 2 addresses motivation to combine LeBoeuf and Lisogurski by referring to those two paragraphs of Section IX.B.2 of his declaration. Ex. 1003 at ¶¶ 276 (stating "***[a]s I discuss in Section IX.B.2***, a person of ordinary skill in the art would have been motivated to apply LeBoeuf's teachings to Lisogurski's system" and "***[a]s I elaborate in Section IX.B.2***" (emphases added)).

192. Based on my review, Petitioners and Dr. Anthony have not provided an explanation as to ***why*** LeBoeuf's alleged arc arrangement of optical emitters 24 and

Omni MedSci Ex. 2118
Samsung Electronics Co. Ltd., et al., v. Omni MedSci - IPR2025-01252

optical detectors 26 in Figure 8B would have been implemented in Lisogurski's sensor by a POSITA.

193. Based on my review, the relevant portions of the Petition and Dr. Anthony's declaration assert a generic motivation for implementing LeBoeuf's alleged arc arrangement of emitters and detectors in Lisogurski: "[to increase the] accuracy and reliability of [] physiological measurements." Petition at 52-53; Ex. 1003 at ¶¶ 262-63.

194. Petitioners and Dr. Anthony do not cite any disclosure in either Lisogurski or LeBoeuf to support this assertion that LeBoeuf's alleged arc arrangement achieves increased accuracy and reliability. Petitioners and Dr. Anthony do not cite any support in Lisogurski because, as they recognize, Lisogurski does not teach the alleged arc arrangement.

195. As for LeBoeuf, the relevant paragraph of the Petition cites to LeBoeuf twice, but these citations do not address LeBoeuf's alleged arc arrangement and therefore do not and cannot support the alleged motivation of accuracy and reliability: (i) Petitioners cite to paragraphs [0006] and [0010] but only regarding LeBoeuf's device being an earbud, not regarding the alleged arc arrangement in Figure 8B; (ii) Petitioners cite to paragraph [0105] and Figure 8B to assert that "a POSITA would have been motivated to apply LeBoeuf's teaching of spatially separated detectors located on one or more arcs to improve the detection of scattered

Omni MedSci Ex. 2118
Samsung Electronics Co. Ltd., et al., v. Omni MedSci - IPR2025-01252

light from biological tissue, and increase the signal-to-noise ratio of Lisogurski's wearable device," but LeBoeuf contains no such teachings, including at paragraph [0105], which does not address the alleged arc arrangement in Figure 8B. Petition at 52-53 (citing Ex. 1026 at [0006], [0010], [0105], FIG. 8B).

196. Also, the relevant paragraphs of Dr. Anthony's declaration contain only a single citation to LeBoeuf, citing to paragraph [0105] for the assertion that "light … [is] reflected back out of the tissue over a broad range of angles and locations," but neither this quoted assertion nor paragraph [0105] addresses the alleged arc arrangement of emitters and detectors in Figure 8B or supports the alleged motivation of accuracy and reliability. Ex. 1003 at ¶¶ 262-63 (citing Ex. 1026 at [0105]). This quoted assertion and citation of paragraph [0105] in the relevant portion of Dr. Anthony's declaration is about the arrangement of only LeBoeuf's detectors, not LeBoeuf's emitters. Ex. 1003 at ¶ 263 (citing Ex. 1026 at [0105]).

197. A POSITA would have understood that the cited paragraph [0105] of LeBoeuf teaches that the detection of scattered light by optical detector 26 is enabled by light guide 18 and light-guiding region 19, which are components not addressed by Petitioners and Dr. Anthony and not included in the alleged arc arrangement. Ex. 1026 at [0105] (disclosing that "the light-guiding region 19 of the light guide 18 guides the [scattered] light to the optical detector 26 through the light-guiding region 19").

Omni MedSci Ex. 2118
Samsung Electronics Co. Ltd., et al., v. Omni MedSci - IPR2025-01252

198. Neither Lisogurski nor LeBoeuf supports this alleged motivation of accuracy and reliability because (i) Lisogurski, as Petitioners and Dr. Anthony recognize, does not teach the alleged arc arrangement to begin with and (ii) LeBoeuf only discloses the alleged arc arrangement via the illustration in Figure 8B and does not contain any discussion of the alleged arc arrangement in Figure 8B, including no disclosure that the arrangement of optical emitters 24 and optical detectors 26 shown in Figure 8B increases accuracy or reliability as alleged. *See* Ex. 1026 at [0123]-[0124]. LeBoeuf does not indicate if or how the alleged arc arrangement in Figure 8B increases the accuracy or reliability of physiological measurements.

199. The only evidence other than LeBoeuf and Lisogurski cited in the relevant paragraphs of the Petition and Dr. Anthony's declaration is Mendelson (Exhibit 1045). Petition at 52-53 (citing Ex.1045, 4:14-65); Ex. 1003 at ¶¶ 262-63 (same). But the cited portion of Mendelson does not include or address the alleged arc arrangement of LeBoeuf's Figure 8B. Also, Mendelson does not support that LeBoeuf's alleged arc arrangement of emitters and detectors achieves increased accuracy and reliability, including because, as I explain further below, Mendelson is only cited as alleged motivation related to LeBoeuf's arrangement of *detectors*, not emitters, and the cited portion of Mendelson does not support the assertion for which it is cited.

Omni MedSci Ex. 2118
Samsung Electronics Co. Ltd., et al., v. Omni MedSci - IPR2025-01252

200. Petitioners also assert that Lisogurski and LeBoeuf "[b]oth … disclose physiological monitoring devices that can be worn on various parts of the body including the ear." Petition at 53. This assertion is not made in the relevant paragraphs of Dr. Anthony's declaration. Ex. 1003 at ¶¶ 262-63. I disagree with this assertion for the reasons discussed in the next section below. Regardless, this assertion does not support the alleged motivation of accuracy and reliability, and does not present any other alleged reason why a POSITA allegedly would have been motivated to implement LeBoeuf's alleged arc arrangement in Lisogurski.

201. Petitioners and Dr. Anthony also refer to Lisogurski's disclosure "that '[a]ny suitable configuration of light source 316 and detector 318 may be used,' and that 'sensor unit 312 may include multiple light sources and detectors, which may be spaced apart.'" Petition at 53 (quoting Ex. 1025 at 17:42-45); Ex. 1003 at ¶ 262 (same). This disclosure in Lisogurski would not have motivated a POSITA to apply LeBeouf's alleged arc arrangement to Lisogurski, and does not teach or suggest that LeBoeuf's alleged arc arrangement would increase accuracy and reliability. As discussed herein, Petitioners and Dr. Anthony have not explained why a POSITA would have understood the alleged arc arrangement of emitters and detectors in LeBoeuf's Figure 8B to have been a suitable and beneficial configuration in Lisogurski.

Omni MedSci Ex. 2118
Samsung Electronics Co. Ltd., et al., v. Omni MedSci - IPR2025-01252

202. For example, LeBoeuf teaches several other arrangements involving multiple emitters and/or detectors (e.g., Ex. 1026 at FIGS. 6, 7A, 11A, 12A-B, 22B, 23), and Petitioners and Dr. Anthony fail to explain why a POSITA would have been motivated to use the alleged arc arrangement in Figure 8B in particular rather than any of the other possible disclosed arrangements in LeBoeuf. Petition at 52-53; Ex. 1003 at ¶¶ 262-63. Even for the embodiment shown in LeBoeuf's Figure 8B, LeBoeuf discloses that "[v]arious configurations and arrangements of optical emitters and detectors may be utilized in accordance with embodiments of the present invention," which shows that LeBoeuf teaches, and a POSITA would have understood, that the alleged arc arrangement shown in Figure 8B is only a possible arrangement and not important. Ex. 1026 at [0123].

203. As another example, a POSITA would have understood that the alleged arc arrangement of emitters and detectors in LeBoeuf's Figure 8B is premised on and involves related components, including base 50, earbud housing 16, cover 18, speaker 22, and light guiding region 19. Ex. 1026 at FIGS. 8A-8B, [0123]. Petitioners and Dr. Anthony do not address those other related components, much less explain why a POSITA allegedly would have been motivated to implement LeBoeuf's alleged arc arrangement of emitters and detectors in Lisogurski without those related components. *See* Petition at 52-53; Ex. 1003 at ¶¶ 262-63. Without those related components in LeBoeuf, a POSITA would not have understood

Omni MedSci Ex. 2118
Samsung Electronics Co. Ltd., et al., v. Omni MedSci - IPR2025-01252

LeBoeuf's alleged arc arrangement of emitters and detectors to have been a suitable and beneficial arrangement for Lisogurski's LEDs and detectors as Petitioners and Dr. Anthony allege. Ex. 1026 at FIGS. 8A-8B, [0123].

204. Petitioners and Dr. Anthony also assert an alleged motivation based on the detection of angularly scattered light. In the Petition, the relevant paragraph argues that "a POSITA would have been motivated to apply LeBoeuf's teaching of spatially separated detectors located on one or more arcs to improve the detection of scattered light from biological tissue," relying on the following assertions:

> *(A)* "Lisogurski's system emits light into biological tissue, and a POSITA would have understood that light emitted into biological tissue undergoes significant scattering and absorption, and the reflected light exits the tissue at a wide range of angles" (citing Ex. 1025 at 11:9-27);
>
> *(B)* "A POSITA would have recognized that a simply linear or closely grouped detector arrangement would fail to capture much of the angularly scattered light" (citing Ex. 1045 at 4:14-65).

Petition at 53 (citing also Ex. 1026 at [0105]). The relevant part of Dr. Anthony's declaration also makes these assertions and citations. Ex. 1003 at ¶ 263 (citing Ex. 1025 at 11:16-20; Ex. 1026 at [0105]; Ex. 1045 at 4:14-65).

205. This alleged motivation regarding detection of angularly scattered light, however, relates only to LeBoeuf's arrangement of ***detectors***, not ***emitters***. Petition at 53; Ex. 1003 at ¶ 263. That is, Petitioners and Dr. Anthony only argue assertions *(A)* and *(B)* above as alleged motivation for modifying Lisogurski based on

Omni MedSci Ex. 2118
Samsung Electronics Co. Ltd., et al., v. Omni MedSci - IPR2025-01252

LeBoeuf's arrangement of optical detectors 26, not LeBoeuf's arrangement of optical emitters 24. Petition at 53 ("Accordingly, a POSITA would have been motivated to apply LeBoeuf's teaching of spatially separated ***detectors*** located on one or more arcs … ." (emphasis added)); Ex. 1003 at ¶ 263 (regarding "LeBoeuf that teaches arranging ***detectors*** … along arcs" and "LeBoeuf's ***detector arrangement***" (emphases added)). For example, Petitioners' assertion *(B)* above refers specifically to a "***detector*** arrangement." Petition at 53 (emphasis added); *see* Ex. 1003 at ¶ 263 ("arrangement of ***detectors***" (emphasis added)). Thus, even assuming that Petitioners and Dr. Anthony are correct that this alleged motivation of detecting angularly scattered light would have led a POSITA to modify Lisogurski based on LeBoeuf, then Lisogurski's LEDs would not have been affected by this modification and therefore still would not have been "located on one or more arcs" as recited in claim 2.

206. Because this alleged motivation regarding detection of angularly scattered light relates only to detectors, the only potential motivation that Petitioners and Dr. Anthony's therefore argue for modifying Lisogurski's LEDs based on LeBoeuf's arrangement of emitters is the generic alleged motivation of "accuracy and reliability," which I discuss above. Petition at 52-53; Ex. 1003 at ¶¶ 262-63. And to the extent that the assertions *(A)* and *(B)* regarding detection of angularly scattered light are intended to support that alleged motivation of accuracy and

Omni MedSci Ex. 2118
Samsung Electronics Co. Ltd., et al., v. Omni MedSci - IPR2025-01252

reliability, these assertions *(A)* and *(B)* only support that alleged motivation of accuracy and reliability with respect to modifying Lisogurski based on LeBoeuf's arrangement of detectors, not emitters.

207. Additionally, the alleged motivation regarding the detection of angularly scattered light based on assertions *(A)* and *(B)* is flawed at least for the following reasons. Assertion *(A)* about "angle[d]" light is not supported by the cited portion of Lisogurski (11:9-27), which relates to "light intensity" based on "absorbance and/or reflectance" of a "certain wavelength" but does not address angularly scattered light. Petition at 53 (citing Ex. 1025 at 11:9-27); Ex. 1003 at ¶ 263 (citing Ex. 1025 at 11:16-20). Based on my review, Lisogurski never mentions an "angle." Also, assertion *(B)* regarding the deficiency of a "linear … detector arrangement" falsely assumes that only two alternative arrangements existed: a "linear … arrangement" and the alleged arc arrangement in LeBoeuf's Figure 8B. Petition at 53; Ex. 1003 at ¶ 263. Assertion *(B)* thus fails to consider that other potential arrangements existed (e.g., triangle, or grid patterns) and that a POSITA could have sought to capture angularly scattered light by using one of those other arrangements, not just the alleged arc arrangement in LeBoeuf's Figure 8B. For example, LeBoeuf itself teaches different arrangements, such as the sensor embodiment in Figure 12A that includes an arrangement of multiple detectors 26 that is neither linear nor like the alleged arc arrangement in Figure 8B, and

Omni MedSci Ex. 2118
Samsung Electronics Co. Ltd., et al., v. Omni MedSci - IPR2025-01252

Petitioners and Dr. Anthony do not explain if or why the alleged arc arrangement of detectors in Figure 8B is better at detecting reflected light than the arrangement in Figure 12A. *E.g.*, Ex. 1026 at FIG. 12A, [0060], [0138].

208. Petitioners and Dr. Anthony's reliance on Mendelson for assertion *(B)* is flawed at least for the following reasons. Petition at 53 (citing Ex. 1045 at 4:14-65); Ex. 1003 at ¶ 263 (same). There is no connection between the particular alleged arc arrangement relied upon in LeBoeuf's Figure 8B and the arrangements referenced in the cited portion of Mendelson, which are different from LeBoeuf's Figure 8B. *E.g.*, Ex. 1045 at 4:14-65 (referencing a sensor with "eight … LEDs and a single photodiode" and another sensor in a "Konig" publication (Ex. 2035)); Ex. 2035 at 5-6 ("Konig" publication disclosing a sensor with two centralized LEDs surrounded by six detectors).

209. Also, Petitioners cite Mendelson for the assertion that "a simply linear or closely grouped detector arrangement would fail to capture much of the angularly scattered light," but the cited portion of Mendelson does not support this assertion. Petition at 53 (citing Ex. 1045 at 4:14-65). The cited portion of Mendelson does not discuss angles, and it describes at least one sensor with only a "single" detector. Ex. 1045 at 4:14-65 ("Yet another prototype reflectance sensor is based on eight … LEDs and a single photodiode"). Also, Dr. Anthony's declaration shows that he and

Omni MedSci Ex. 2118
Samsung Electronics Co. Ltd., et al., v. Omni MedSci - IPR2025-01252

Petitioners rely specifically on the following purported disclosure in Mendelson, and Dr. Anthony relies on the two underlined quotes for this purported disclosure:

> For example, U.S. Pat. No. 6,801,799, which I understand has been designated as Exhibit 1045, is directed to a pulse oximeter and discloses that "in order to maximize the fraction of backscattered light collected by [a] sensor," its system includes "six photodetectors mounted in the center of the sensor ***around*** the LEDs." Ex. 1045 at 4:14-65 (emphasis my own).

Ex. 1003 at ¶ 263 (underlining added).

210. However, Mendelson does not contain this purported disclosure, and Dr. Anthony mischaracterizes Exhibit 1045, because (i) the underlined quotes (i.e., Exhibit 1045, 4:23-24 and 4:45-46) refer to publications in the Background section of Exhibit 1045, not to "its system" as Dr. Anthony alleges, and (ii) the two underlined quotes are separate and unrelated. The following excerpt from Exhibit 1045 shows that these two underlined quotes that Dr. Anthony relies upon refer to two separate, unrelated publications described in the cited Background section of Exhibit 1045:

> Another approach is based on … the following publications:
>
> 4. Mendelson, et al., "Design and evaluation of a new reflectance pulse oximeter sensor", Medical Instrumentation, vol. 22, no. 4, pp. 167-173 (1988); and
>
> 5. Mendelson, et al., "Skin reflectance pulse oximetry: in vivo measurements from the forearm and calf", Journal of Clinical Monitoring, vol. 7, pp. 7-12, (1991).
>
> According to this approach, in order to maximize the fraction of

Omni MedSci Ex. 2118
Samsung Electronics Co. Ltd., et al., v. Omni MedSci - IPR2025-01252

> backscattered light collected by the sensor, the currents from all six photodiodes are summed electronically by internal circuitry in the pulse oximeter. This configuration essentially creates a large area photodetector made of six discrete photodiodes connected in parallel to produce a single current that is proportional to the amount of light backscattered from the skin. Several studies showed that this sensor configuration could be used successfully to accurately measure SaO_2 from the forehead, forearm and the calf on humans. However, this sensor requires a means for heating the skin in order to increase local blood flow, which has practical limitations since it could cause skin burns.
>
> Yet another prototype reflectance sensor is based on eight dual-wavelength LEDs and a single photodiode, and is disclosed in the following publication: Takatani et al., "Experimental and clinical evaluation of a noninvasive reflectance pulse oximeter sensor", Journal of Clinical Monitoring, vol. 8, pp. 257-266 (1992). …
>
> A similar sensor configuration based on six photodetectors mounted in the center of the sensor around the LEDs is disclosed in the following publication: Konig, et al., "Reflectance pulse oximetry—principles and obstetric application in the Zurich system", Journal of Clinical Monitoring, vol. 14, pp. 403-412 (1998).

Ex. 1045 at 4:14-50 (underlining added). Thus, Exhibit 1045 does not disclose, as Dr. Anthony purports, mounting detectors "around" LEDs to maximize light collection. Ex. 1003 at ¶ 263. Instead, the actual teaching of the first underlined quote says: "in order to maximize the … light collected … *the currents from all ... photodiodes are summed electronically*," which is unrelated to arrangement and instead related to an increased area of the detector. Ex. 1045 at 4:23-26 (emphasis added).

Omni MedSci Ex. 2118
Samsung Electronics Co. Ltd., et al., v. Omni MedSci - IPR2025-01252

211. Based on my review, Petitioners and Dr. Anthony have not provided an explanation, or supporting evidence, of specifically ***how*** LeBoeuf's alleged arc arrangement of optical emitters 24 and optical detectors 26 in Figure 8B would have been implemented in Lisogurski's sensor by a POSITA.

212. A POSITA would have understood that the alleged arc arrangement of emitters and detectors in LeBoeuf's Figure 8B is based on and involves related components, including base 50, earbud housing 16 (with bottom portion 16*a*), cover 18 (with cladding material 21), speaker 22, and light guiding region 19. Ex. 1026 at FIGS. 8A-8B, ¶¶ [0123]-[0124]. The relevant paragraphs of the Petition and Dr. Anthony's declaration do not consider or address those related components, much less explain how the alleged arc arrangement of emitters and detectors in LeBoeuf, which is based on those related components, would be implemented in Lisogurski's sensor that does not have those related components. Petition at 52-53; Ex. 1003 at ¶¶ 262-63. Petitioners and Dr. Anthony only argue that a POSITA would have been motivated to apply LeBoeuf's alleged arc arrangement of emitters and detectors to Lisogurski's sensor, not that a POSITA would have incorporated those other related components from LeBoeuf into Lisogurski. Petition at 52-53; Ex. 1003 at ¶¶ 262-63. Without incorporating those related components from LeBoeuf into Lisogurski, Petitioners and Dr. Anthony do not explain how a POSITA would have understood to apply LeBoeuf's alleged arc arrangement of emitters and detectors to Lisogurski's

Omni MedSci Ex. 2118
Samsung Electronics Co. Ltd., et al., v. Omni MedSci - IPR2025-01252

sensor. Ex. 1026 at FIGS. 8A-8B, [0123]. Dr. Anthony testified that the arrangement of detectors 26 in FIGS. 8A-8B depends on the "particular" design of that embodiment. Ex. 2045, 205:6-207:23. He also agreed that the arrangement of emitters 24 and detectors 26 is dictated by the shape of the earbud housing 16 and cover 18. Ex. 2045, 171:20-172:6 (earbud housing 16 and cover 18 are circular), 205:1-5 (Q: "[G]iven that both the cover 18 and the earbud housing [16] are circular, the space between the earbud housing 16 and the cover 18 also has a circulate shape. Correct?"; A: "Yes."), 204:6-25 (detectors 26 are positioned "[b]etween [earbud housing] 16 and [cover] 18"), 175:2-177:6 (LeBoeuf "use[s] the housing [16] and cladding material [21] to direct light" to detectors 26), 193:17-194:20 ("LeBoeuf talks extensively about…having cladding surfaces…that guide light" and "[t]alks about the issues of…directing light…to the detectors"), 198:5-17 (recognizing that placement of detectors "where the light is to be expected" depends on "structures that guide a light to earbuds"); 169:19-171:13 (light blocking region 16a blocks the detectors from receiving light directly from the emitters).

213. Petitioners and Dr. Anthony assert an alleged motivation of increased accuracy and reliability. Petition at 52-53; Ex. 1003 at ¶¶ 262-63. They do not explain if or how LeBoeuf's alleged arc arrangement of emitters and detectors would allegedly achieve such accuracy and reliability without the other related components in LeBoeuf. Petition at 52-53; Ex. 1003 at ¶¶ 262-63. Without those other related

Omni MedSci Ex. 2118
Samsung Electronics Co. Ltd., et al., v. Omni MedSci - IPR2025-01252

components in LeBoeuf upon which the alleged arc arrangement of emitters and detectors is based, a POSITA would not have understood the alleged arc arrangement of emitters and detectors to achieve accuracy and reliability as alleged. Ex. 1026 at FIGS. 8A-8B, [0123].

d) A POSITA Would Not Have Been Motivated to Implement LeBoeuf's Alleged Arc Arrangement in Lisogurski to Meet the Arc Limitation

214. As explained above, for the arc limitation in claim 2 that recites "wherein the plurality of semiconductor sources and the plurality of spatially separated detectors are located on one or more arcs," Petitioners and Dr. Anthony argue that a POSITA would have applied LeBoeuf's alleged arc arrangement of optical emitters 24 and optical detectors 26 shown by Figure 8B to arrange Lisogurski's LEDs and detectors to meet this limitation. Petition at 55-57, 52-53; Ex. 1003 at ¶¶ 270-79, 262-63. As also explained above, Petitioners and Dr. Anthony do not show that a POSITA would have been motivated to implement LeBoeuf's alleged arc arrangement in Lisogurski like this. Further, a POSITA would not have been motivated to implement LeBoeuf's alleged arc arrangement in Lisogurski for at least the following reasons.

215. A POSITA would have understood that LeBoeuf is directed extensively to "earbud" devices that are specifically configured to be placed within a user's ear and to transmit light and sound into the ear canal. Ex. 1026 at Abstract, [0002],

Omni MedSci Ex. 2118
Samsung Electronics Co. Ltd., et al., v. Omni MedSci - IPR2025-01252

[0009], [0123], FIGS. 1-12B. In particular, the embodiment shown in LeBoeuf's Figures 8A-8B that Petitioners and Dr. Anthony rely upon for the arc limitation in claim 2 is a "light-guiding earbud." Ex. 1026 at [0048]-[0049], [0123].

216. A POSITA would have also understood that for the embodiment shown in LeBoeuf's Figures 8A-8B (annotated versions below), the alleged arc arrangement of optical emitters 24 (purple) and detectors 26 (orange) that Petitioners and Dr. Anthony rely upon is premised on other related components, including base 50, earbud housing 16 (including bottom portion 16*a*), cover 18 (including the various portions thereof), and speaker 22 (all green) as well as light guiding region 19:

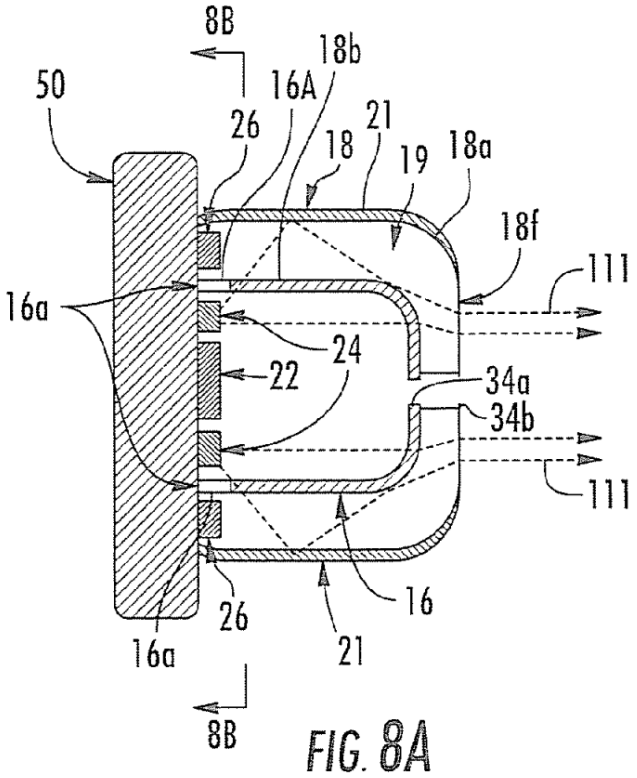

FIG. 8A

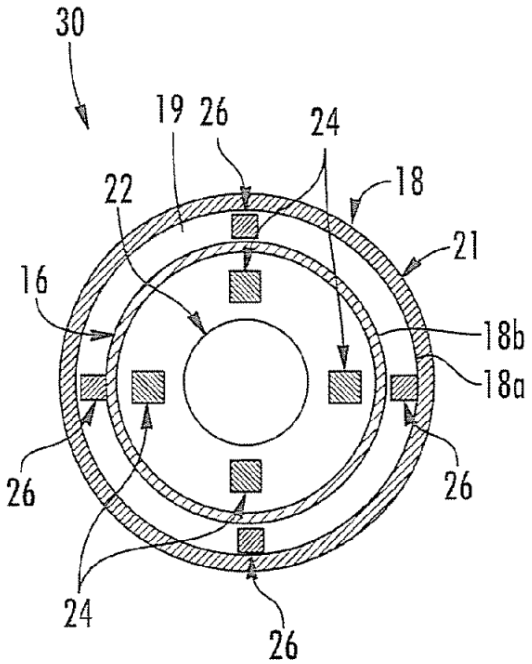

FIG. 8B

Omni MedSci Ex. 2118
Samsung Electronics Co. Ltd., et al., v. Omni MedSci - IPR2025-01252

Ex. 1026 at FIGS. 8A-8B (annotated), [0123]-[0124]. For example, in the embodiment of Figures 8A-8B, optical emitters 24 are positioned on base 50 around a centrally located speaker 22 and within earbud housing 16, and optical detectors 26 are positioned on base 50 outside of earbud housing 16 but inside cover 18, with emitters 24 and detectors 26 separated by light blocking region 16*a*, with emitters 24 and detectors 26 generally directed to cover end portion 18*f*, and with a light guiding region 19 defined by cover outer surface 18*a* with cladding material 21 and housing 16 in contact with cover inner surface 18*b* and serving as a cladding layer. Ex. 1026 at FIGS. 8A-8B, [0123]-[0124].

217. A POSITA would have also understood that those other related components in Figures 8A-8B are earbud-specific components and that the configuration of components in Figures 8A-8B—including the alleged arc arrangement of emitters and detectors and the other related components on which that alleged arc arrangement is premised—is necessarily based on, and specific to, an earbud and the unique physical aspects of using a sound- and light-guiding earbud to deliver sound to and deliver/collect light to/from the ear canal. *See, e.g.*, Ex. 1026 at [0123] ("light guiding earbud 30"; "earbud housing 16 extending outwardly from the base 50 that is configured to be positioned within an ear"; "earbud housing 16 is in acoustical communication with a speaker 22 and includes at least one aperture 34*a* through which sound from the speaker 22 can pass"; "cover 18 includes at least

Omni MedSci Ex. 2118
Samsung Electronics Co. Ltd., et al., v. Omni MedSci - IPR2025-01252

one aperture 34*b* through which sound from the speaker 22 can pass"; "light guiding region 19"; "cover 18 … serves as a light guide that delivers light from the optical emitters 24 into an ear canal … through cover end portion 18*f*" and "also collects light through end portion 18*f* and delivers the collected light to the optical detectors 26").

218. For example, the alleged arc arrangement that Petitioners and Dr. Anthony rely upon in LeBoeuf's Figure 8B is the positioning of optical emitters 24 and detectors 26 relative to earbud-specific components, such as the positioning of emitters 24 and detectors 26 around "speaker 22" and around the circular bottom portions of "earbud housing 16" and "cover 18 that surrounds the earbud housing 16" and that "serves as a light guide that delivers light from the optical emitters 24 into an ear canal." Ex. 1026 at [0123], FIGS. 8A-8B.

219. A POSITA would recognize that the generally cylindrical shapes of the earbud housing 16 and the cover 18 are dictated by the fact that they are designed to be placed in a user's ear. The fact that the emitters 24 and the detectors 26 are arranged in an "arc" in LeBoeuf is merely a result of the geometric constraints dictated by the fact that the earbud housing 16 and the cover 18 must be shaped to fit in an ear. Nothing in LeBeouf indicates to a POSITA that the arrangement of detectors and emitters in FIG. 8B has any advantage or benefit relative to other arrangements.

Omni MedSci Ex. 2118
Samsung Electronics Co. Ltd., et al., v. Omni MedSci - IPR2025-01252

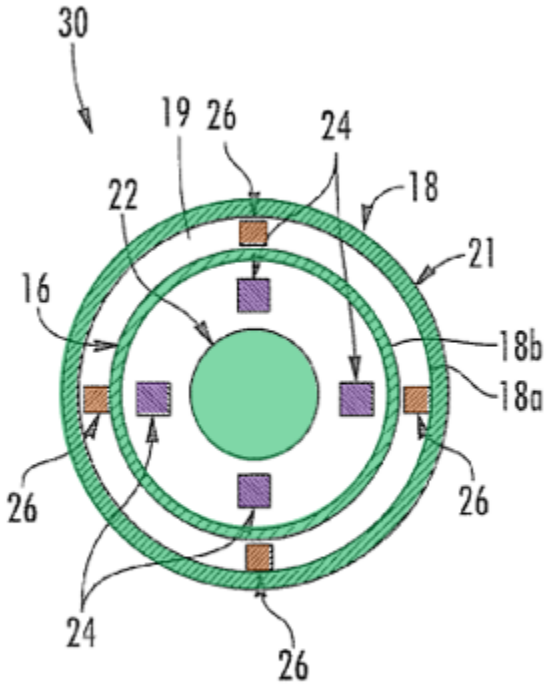

FIG. 8B

220. For example, LeBoeuf discloses an alternative embodiment in FIGS. 9A and 9B that includes four emitters 24 (as shown in FIG. 9B) and only one detector 26 (as shown in FIG. 9A). Ex. 1026 at FIGS. 9A-9B.

Omni MedSci Ex. 2118
Samsung Electronics Co. Ltd., et al., v. Omni MedSci - IPR2025-01252

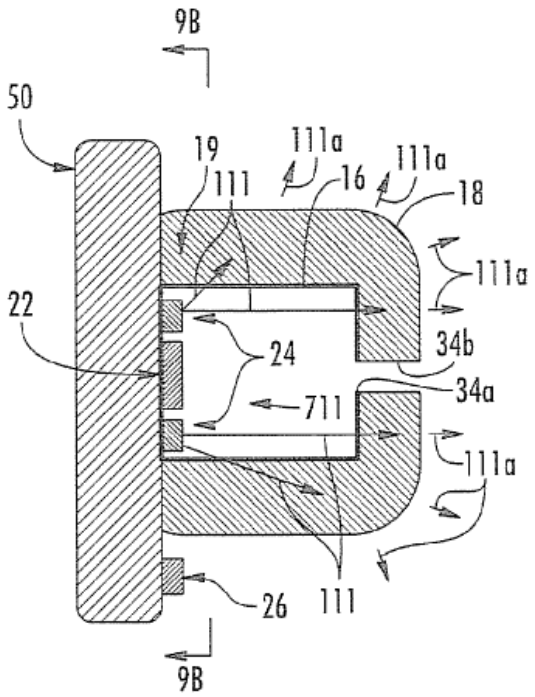

FIG. 9A

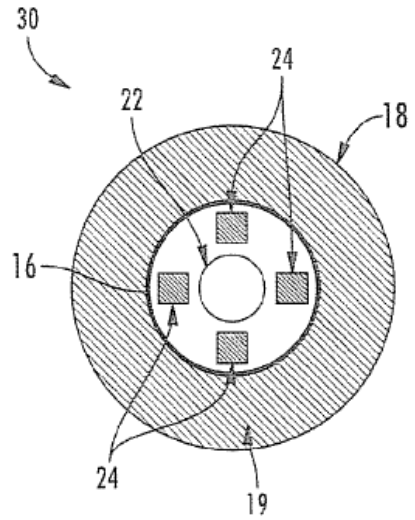

FIG. 9B

221. LeBoeuf does not disclose or suggest that the embodiment in FIG. 8B with four detectors arranged in an arc due to the geometry of the housing 16 and cover 18 is any more accurate than the embodiment in FIGS. 9A and 9B with only one detector that is not arranged along an arc. In fact, LeBouef indicates that the embodiment in FIGS. 9A and 9B is more accurate than the embodiment in FIGS. 8A and 8B because "the scattered light coming from the ear, measured by the optical detector 26, is more indicative of blood flow changes within blood vessels and less indicative of mouth movements and body portion." Ex. 1026 at [0128]. Dr. Anthony agreed that LeBoeuf's alleged arc arrangement of emitters 24 and detectors 26 is dictated by the geometry and relative position of other components. Ex. 2045,

Omni MedSci Ex. 2118
Samsung Electronics Co. Ltd., et al., v. Omni MedSci - IPR2025-01252

171:20-172:6 (earbud housing 16 and cover 18 are circular), 205:1-5 (Q: "[G]iven that both the cover 18 and the earbud housing [16] are circular, the space between the earbud housing 16 and the cover 18 also has a circulate shape. Correct?"; A: "Yes."), 204:6-25 (detectors 26 are positioned "[b]etween [earbud housing] 16 and [cover] 18"), 175:2-177:6 (LeBoeuf "use[s] the housing [16] and cladding material [21] to direct light" to detectors 26), 193:17-194:20 ("LeBoeuf talks extensively about…having cladding surfaces…that guide light" and "[t]alks about the issues of…directing light…to the detectors"), 198:5-17 (recognizing that placement of detectors "where the light is to be expected" depends on "structures that guide a light to earbuds"); 169:19-171:13 (light blocking region 16a blocks the detectors from receiving light directly from the emitters); 205:6-207:23 (testifying the arrangement of detectors 26 in FIGS. 8A-8B depends on the "particular" design of that embodiment).

222. A POSITA would have understood that Lisogurski, in contrast to LeBoeuf, does not teach that its sensor can be an earbud placed within an ear, let alone teach sound- and light-guiding earbud components such as those described above upon which LeBoeuf's alleged arc arrangement is premised. For example, Lisogurski does not disclose that its sensor can include a speaker or make sound. At most, a POSITA would have understood that Lisogurski only discloses that its sensor may be placed on an "earlobe" or "around or in front of the ear"—not **within** the ear

Omni MedSci Ex. 2118
Samsung Electronics Co. Ltd., et al., v. Omni MedSci - IPR2025-01252

like the relied-upon embodiment in Figure 8B of LeBoeuf. Ex. 1025 at 4:6-20; Ex. 1026 at [0123]. Lisogurski also does not teach that its sensor takes measurements from the ear canal like the relied-upon embodiment in LeBoeuf. Ex. 1026 at [0123]. A POSITA would have understood that Lisogurski only teaches a sensor that is placed on and takes measurements directly from an **external site** on a patient. Ex. 1025 at 4:6-20 (describing suitable sensor locations as a fingertip, toe, forehead, earlobe, foot, neck, wrist, thigh, ankle, and around or in front of the ear).

223. The Petition asserts that "[b]oth Lisogurski and LeBoeuf disclose physiological monitoring devices that can be worn on various parts of the body including the ear." Petition at 53 (citing Ex. 1025 at 4:6-20; Ex. 1026 at [0006], [0010]). This assertion is not made in the relevant paragraphs of Dr. Anthony's declaration. Ex. 1003 at ¶¶ 262-63. Also, this assertion fails to recognize, as explained above, that (i) the alleged arc arrangement of emitters and detectors that Petitioners rely upon in LeBoeuf's Figure 8B is premised on other earbud-specific components, (ii) the configuration of components in LeBoeuf's Figure 8B, including the alleged arc arrangement and related components, is specific to an earbud, and (iii) Lisogurski does not teach that its sensor can be an earbud. Ex. 1025 at 4:6-20; Ex. 1026 at [0123]. The portions of Lisogurski and LeBoeuf that Petitioners cite for their assertion support this distinction. Ex. 1025 at 4:6-20 (disclosing at most that

Omni MedSci Ex. 2118
Samsung Electronics Co. Ltd., et al., v. Omni MedSci - IPR2025-01252

the sensor can be placed on an "earlobe" or "around or in front of the ear," but not in the ear); Ex. 1026 at [0006] ("earbud"), [0010] ("Light directed into the ear").

224. Because Lisogurski's sensor does not include the related components upon which LeBoeuf's alleged arc arrangement of emitters and detectors in Figures 8A-8B is premised, as explained above, and Petitioners and Dr. Anthony do not argue that Lisogurski would have been modified to include those related components, a POSITA would not have been motivated to implement LeBoeuf's alleged arc arrangement in Lisogurski nor capable of doing so. Ex. 1026 at FIGS. 8A-8B, [0123]-[0124].

225. Also, because Lisogurski does not teach or suggest that its sensor could be an earbud or placed within the ear, for example, to take measurements from the ear canal, a POSITA would not have modified Lisogurski's sensor based on LeBoeuf's alleged arc arrangement of emitters and detectors, which is premised on related earbud-specific components and is part of an earbud-specific configuration, as explained above. Ex. 1026 at FIGS. 8A-8B, [0123]-[0124].

226. Petitioners and Dr. Anthony refer to Lisogurski's disclosure "that '[a]ny suitable configuration of light source 316 and detector 318 may be used,' and that 'sensor unit 312 may include multiple light sources and detectors, which may be spaced apart.'" Petition at 53 (quoting Ex. 1025 at 17:42-45); Ex. 1003 at ¶ 262 (same). But a POSITA would not have understood that the alleged arc arrangement

Omni MedSci Ex. 2118
Samsung Electronics Co. Ltd., et al., v. Omni MedSci - IPR2025-01252

in LeBoeuf's Figure 8B would be a suitable configuration for Lisogurski for the reasons explained herein, including that LeBoeuf's alleged arc arrangement is part of an earbud-specific embodiment, whereas Lisogurski is directed to a non-earbud sensor. Ex. 1026 at [0123]; Ex. 1025 at 4:6-20.

227. In addition to LeBoeuf's earbud embodiment shown in Figures 8A-8B that Petitioners and Dr. Anthony rely upon, LeBeouf also discloses non-earbud monitoring devices that "may … be attached to earlobes, fingers, toes, other digits, etc.," such as monitoring device 70 shown in LeBoeuf's Figures 22A-22B that is "configured to fit over a finger" or monitoring device 70' in Figure 23 that is "configured to be attached to a body of a subject as a bandage." Ex. 1026 at [0070]-[0072], FIGS. 22A-23, [0157]-[0160], [0164]-[0165]. LeBoeuf's alleged arc arrangement that Petitioners and Dr. Anthony rely upon from the earbud embodiment in Figure 8B, in which emitters 24 and detectors 26 are positioned around speaker 22 in earbud 30, is not included in the non-earbud devices 70 and 70' in Figures 22A-23, which each include only one optical emitter 24, detector 26, and noise detector 26'. Ex. 1026 at FIG. 8B, [0123], FIGS. 22A-23, [0157]-[0160], [0164]-[0165]. A POSITA would have understood that this difference between the earbud and non-earbud embodiments in LeBoeuf further shows that the configuration in LeBoeuf's Figure 8B, including the alleged arrangement, is specific to an earbud due to its unique sound application. Ex. 2045, 186:15-188:18

Omni MedSci Ex. 2118
Samsung Electronics Co. Ltd., et al., v. Omni MedSci - IPR2025-01252

(acknowledging that LeBoeuf's non-earbud embodiment in FIG. 22B does not show an arc arrangement).

228. A POSITA reviewing Lisogurski and LeBoeuf would have understood that Lisogurski's sensor is comparable, at most, to LeBoeuf's non-earbud embodiments in Figures 22A-23, not the earbud embodiment in Figure 8B. Ex. 1025 at 4:6-20 (fingertip, toe, earlobe, and body for Lisogurski); Ex. 1026 at [0157] (fingers, toes, and earlobes for LeBoeuf's embodiment in FIGS. 22A-22B), [0164] (body for LeBoeuf's embodiment in FIG. 23).

e) Dr. Anthony's Alleged Motivations for the Arc and Reflective Surface Limitations Are Contradictory

229. In my opinion, Dr. Anthony's stated motivations for the arc limitation and the reflective surface limitation are internally contradictory. Ex. 1003 at ¶¶ 276, 353.

230. For the arc limitation in claim 2 (also 9, and 15), Dr. Anthony argues that "a person of ordinary skill in the art would have been motivated to apply LeBoeuf's teachings to Lisogurski's system specifically, to arrange the plurality of semiconductor sources so that they are spatially separated from each another," with the semiconductor sources "positioned along [an] arc[]." Ex. 1003 at ¶ 276. Dr. Anthony reasoned that a POSITA would have been motivated to arrange the semiconductor sources/emitters of Lisogurski in such an arc arrangement in order to

Omni MedSci Ex. 2118
Samsung Electronics Co. Ltd., et al., v. Omni MedSci - IPR2025-01252

"enhance measurement accuracy by increasing the surface area of the subject's tissue exposed to the emitted light." Ex. 1003 at ¶ 276. In other words, Dr. Anthony asserts that the purpose of the arc arrangement is to spread the emitted light across a broader area of tissue—maximizing the area of tissue illuminated. Ex. 1003 at ¶ 276.

231. For the reflective surface limitation in Claim 17 (also 6, and 13), however, Dr. Anthony argues that "a person of ordinary skill in the art would have been motivated to apply LeBoeuf's teachings to Lisogurski's system to enhance the efficiency with which light is delivered to the target tissue." Ex. 1003 at ¶ 355. Dr. Anthony opines that a POSITA would have been motivated to modify Lisogurski to include a reflective surface of LeBeouf to "focus[light] on a particular region of the ear where a particular physiological activity may be located." Ex. 1003 at ¶ 353 (quoting Ex. 1026 at [0125]); see also Ex. 1003 at ¶ 265 (citing the same). LeBeouf also states that "this configuration may reduce unwanted optical signals from regions that may not be relevant to the physiological activity of interest." Ex. 1026 at [0125]. In other words, Dr. Anthony asserts that the purpose of the reflective surface is to concentrate the emitted light onto a smaller, targeted area of tissue—focusing the light rather than spreading it. Ex. 1003 at ¶¶ 350-355.

232. These two motivations are contradictory. On one hand, Dr. Anthony says the arc arrangement should spread light across a broader area of tissue. On the other hand, Dr. Anthony says the reflective surface should focus light onto a

Omni MedSci Ex. 2118
Samsung Electronics Co. Ltd., et al., v. Omni MedSci - IPR2025-01252

particular, smaller area of tissue. A POSITA cannot simultaneously be motivated to both maximize the area of tissue illuminated (arc arrangement) and focus the light onto a particular region (reflective surface). Ex. 1003 at ¶¶ 265, 276, 353.

233. This contradiction is particularly significant because two of the "reflective surface" claims (claims 6, and 17) depend from two of the "arc" claims (claims 2, and 15, respectively). Ex. 1001 at 87:27-54 (claim 6 depends from claim 5, which depends from claim 4, which depends from claim 3, which depends from claim 2); 90:6-26 (claim 17 depends from claim 16, which depends from claim 15). This means that those two reflective surface claims require both the arc arrangement (to spread light across tissue) and the reflective surface (to focus light onto a particular region)—two features with contradictory purposes as described by Dr. Anthony. Ex. 1003 at ¶¶ 265, 276, 353.

234. Dr. Anthony's declaration does not address this contradiction. Ex. 1003 at ¶¶ 262-268, 270-279, 350-355. Dr. Anthony does not explain how a POSITA would have been simultaneously motivated to (1) spread light across a broader tissue area using an arc arrangement and (2) focus light onto a particular region using a reflective surface. A POSITA would have recognized that these two objectives work at cross-purposes—if the goal is to focus light onto a particular region, there is no need to spread it across a broad area first, and if the goal is to illuminate a broad

Omni MedSci Ex. 2118
Samsung Electronics Co. Ltd., et al., v. Omni MedSci - IPR2025-01252

area, focusing the light defeats that purpose. Ex. 1003 at ¶¶ 262-268, 270-279, 350-355.

f) Dr. Anthony's Alleged Motivation for the Arc Limitation with Respect to Semiconductor Sources is Conclusory and Unsupported

235. Claim 2's arc limitation recites in part that "the plurality of semiconductor sources a... are located on one or more arcs." Dr. Anthony's claim 2 analysis argues that a POSITA would have been motivated to arrange Lisogurski's semiconductor sources in an arc as in LeBoeuf because "a [POSITA] would have recognized that such an arrangement could enhance measurement accuracy by increasing the surface area of the subject's tissue exposed to the emitted light." Ex. 1003 at ¶ 276. But this alleged motivation is conclusory and unsupported because Dr. Anthony's analysis of claim 2 provides no explanation or cited evidence for this assertion. Ex. 1003 at ¶ 276. For example, Dr. Anthony does not explain why or how "increasing the surface area of the subject's tissue exposed to the emitted light" would purportedly "enhance measurement accuracy." Ex. 1003 at ¶ 276. The only alleged support that Dr. Anthony provides for this alleged motivation is a cross-reference to his discussion in "Section IX.B.2," but in that section Dr. Anthony only addresses motivation regarding arrangement of *detectors*, not *emitters* (semiconductor sources). *See* Ex. 1003 at ¶¶ 262-63. Indeed, Dr. Anthony's Section

Omni MedSci Ex. 2118
Samsung Electronics Co. Ltd., et al., v. Omni MedSci - IPR2025-01252

IX.B.2 contains no mention of "surface area" in relation to the arc limitation. *See* Ex. 1003 at ¶¶ 261-64.

236. Furthermore, a person of ordinary skill would know that an increased "surface area" does not require an arc-shaped configuration. Surface area can be increased through many geometries (e.g., planar, faceted, segmented, or irregular shapes). Accordingly, the mere fact that a design increases surface area does not support an inference that the semiconductor sources must be arranged in an arc. Moreover, increasing surface area alone does not necessarily enhance measurement accuracy. Accuracy depends on factors such as sensor placement relative to the target tissue, optical coupling/contact pressure, signal-to-noise ratio, artifact sensitivity, and calibration. Changing shape or adding area can have no effect if it does not improve those parameters.

2. Dependent Claims 3-4

237. I disagree with Petitioners and Dr. Anthony's assertion that claims 3-4 are obvious over Lisogurski and LeBoeuf.

238. Claims 3-4 each depend from both claims 1 and 2, as claim 3 depends from claim 2 that depends from independent claim 1, and claim 4 depends from claim 3. For claims 3-4, Petitioners and Dr. Anthony rely on their analysis of claim 11, and their analysis of claim 11 does not address any of the aforementioned deficiencies regarding Lisogurski in relation to claim 1 or the aforementioned

Omni MedSci Ex. 2118
Samsung Electronics Co. Ltd., et al., v. Omni MedSci - IPR2025-01252

deficiencies regarding Lisogurski and LeBoeuf in relation to claim 2. Petition at 57-58, 49-51; Ex. 1003 at ¶¶ 280-85, 253-57. Petitioners and Dr. Anthony's analysis of claims 3-4, including their analysis of claim 11 that they rely upon for claims 3-4, does not rely on LeBoeuf to cure the aforementioned deficiencies regarding Lisogurski in relation to claim 1. Petition at 57-58, 49-51; Ex. 1003 at ¶¶ 280-85, 253-57.

239. Therefore, Lisogurski and LeBoeuf do not render obvious claims 3-4 for at least the same reasons explained in Section X.A.1 above with respect to independent claim 1 and in Section X.B.1 above with respect to claim 2.

240. Also, similar to claim 11, claim 4 recites "wherein the output signal corresponding to at least one of the optical wavelengths is used to improve measurement of at least one of the one or more physiological parameters using the output signal corresponding to the other two optical wavelengths." Ex. 1001 at 87:36-40. Petitioners and Dr. Anthony's analysis of claim 4 does not address any of the aforementioned deficiencies regarding Lisogurski in relation to this limitation in claim 11 or rely on LeBoeuf to fix those deficiencies. Petition at 57-58; Ex. 1003 at ¶¶ 280-85.

241. Therefore, Lisogurski and LeBoeuf do not render obvious claim 4 for at least the same reasons explained in Section X.A.3.a above with respect to claim 11.

Omni MedSci Ex. 2118
Samsung Electronics Co. Ltd., et al., v. Omni MedSci - IPR2025-01252

3. Dependent Claim 9

242. I disagree with Petitioners and Dr. Anthony's assertion that claim 9 is obvious over Lisogurski and LeBoeuf.

243. Claim 9 depends from independent claim 8. I also understand that for claim 9, Petitioners and Dr. Anthony rely on their analysis of claim 2, and their analysis of claim 2 does not address any of the aforementioned deficiencies regarding Lisogurski in relation to claim 8. Petition at 57-58, 55-57; Ex. 1003 at ¶¶ 286-89, 270-79. I further understand that Petitioners and Dr. Anthony's analysis of claim 9, including their analysis of claim 2 that they rely upon for claim 9, does not rely on LeBoeuf to cure the aforementioned deficiencies regarding Lisogurski in relation to claim 8. Petition at 57-58, 55-57; Ex. 1003 at ¶¶ 286-89, 270-79.

244. Therefore, Lisogurski and LeBoeuf does not render obvious claim 9 for at least the same reasons explained in Section X.A.2 above with respect to independent claim 8.

245. Additionally, I understand that claim 9 recites "wherein the plurality of semiconductor sources and the plurality of spatially separated detectors are located on one or more arcs," which is also recited by claim 2. Ex. 1001 at 88:40-42, 87:29-31; Petition at xiii, x.

246. I understand that for claim 9, Petitioners and Dr. Anthony rely on their analysis of claim 2, and they do not separately analyze claim 9. Petition at 57-58;

Omni MedSci Ex. 2118
Samsung Electronics Co. Ltd., et al., v. Omni MedSci - IPR2025-01252

Ex. 1003 at ¶¶ 286-89. Petitioners and Dr. Anthony's analysis of claim 9 does not address any of the aforementioned deficiencies regarding Lisogurski and LeBoeuf in relation to claim 2. Petition at 57-58; Ex. 1003 at ¶¶ 286-89.

247. Therefore, Lisogurski and LeBoeuf do not render obvious claim 9 for at least the same reasons explained in Section X.B.1 above with respect to claim 2.

4. Dependent Claim 10

248. I disagree with Petitioners and Dr. Anthony's assertion that claim 10 is obvious over Lisogurski and LeBoeuf.

249. Claim 10 depends from both claims 8 and 9, as claim 10 depends from claim 9 that depends from independent claim 8. I also understand that for claim 10, Petitioners and Dr. Anthony rely on their analysis of limitation [1.m], and their analysis of limitation [1.m] does not address any of the aforementioned deficiencies regarding Lisogurski in relation to limitation [8.b] of claim 8 or the aforementioned deficiencies regarding Lisogurski and LeBoeuf in relation to claim 9. Petition at 57-58, 45-47; Ex. 1003 at ¶¶ 290-92, 197-204. I further understand that Petitioners and Dr. Anthony's analysis of claim 10, including their analysis of limitation [1.m] that they rely upon for claim 10, does not rely on LeBoeuf to cure the aforementioned deficiencies regarding Lisogurski in relation to limitation [8.b] of claim 8. Petition at 57-58, 49-51; Ex. 1003 at ¶¶ 280-85, 253-57.

Omni MedSci Ex. 2118
Samsung Electronics Co. Ltd., et al., v. Omni MedSci - IPR2025-01252

250. Therefore, Lisogurski and LeBoeuf do not render obvious claim 10 for at least the same reasons explained in Section X.A.2 above with respect to independent claim 8 and in Section X.B.3 above with respect to claim 9.

251. Also, similar as claim element [1.m], dependent claim 10 requires, in part, "three optical wavelengths for measuring at least a portion of the one or more of the physiological parameters." 88:42-45 (claim 10). Petitioners and Dr. Anthony's analysis of claim 10 does not address any of the aforementioned deficiencies regarding Lisogurski in relation to claim limitation [1.m] or rely on LeBoeuf to fix those deficiencies. Petition at 57-58; Ex. 1003 at ¶¶ 290-92.

252. Therefore, Lisogurski and LeBoeuf do not render obvious claim 10 for at least the same reasons explained in Section X.A.1.c above with respect to limitation [1.m].

5. Independent Claim 15

253. I disagree with Petitioners and Dr. Anthony's assertion that claim 15 is obvious over Lisogurski and LeBoeuf.

254. Claim 15 includes limitations [15.a]-[15.b] that together recite, in part, "a wearable device … including a light source comprising a driver and a plurality of semiconductor sources that are light emitting diodes." Ex. 1001 at 89:8-11; Petition at xiv. In particular, a portion of limitation [15.b] recites "a light source ***comprising***

Omni MedSci Ex. 2118
Samsung Electronics Co. Ltd., et al., v. Omni MedSci - IPR2025-01252

a driver," which is also recited by limitations [1.b] and [8.b]. Ex. 1001 at 89:9-10 (emphasis added), 86:46-47, 87:63; Petition at xiv, viii, xi.

255. I understand that for limitation [15.b], Petitioners and Dr. Anthony rely on their analysis of limitation [8.b] that in turn relies on their analysis of limitation [1.b], and they do not separately analyze limitations [15.b] or [8.b] regarding the claim limitation of "a light source comprising a driver." Petition at 58, 47; Ex. 1003 at ¶¶ 299-302, 211-14. Petitioners and Dr. Anthony's analyses of limitation [15.b] and limitation [8.b] do not address any of the aforementioned deficiencies regarding Lisogurski in relation to limitation [1.b]. Petition at 58, 47; Ex. 1003 at ¶¶ 299-302, 211-14. I further understand that Petitioners and Dr. Anthony's analysis of limitation [15.b] does not rely on LeBoeuf to cure the aforementioned deficiencies regarding Lisogurski in relation to limitation [1.b]. Petition at 58; Ex. 1003 at ¶¶ 299-302.

256. Therefore, Lisogurski and LeBoeuf do not teach or render obvious the portion of limitation [15.b] that recites "a light source comprising a driver" for at least the same reasons explained in Section X.A.1.a above with respect to limitation [1.b].

257. Also, similar to limitation [8.m] in claim 8, I understand that claim 15 includes limitation [15.m] that recites "wherein the plurality of semiconductor sources comprises six light emitting diodes." Ex. 1001 at 90:6-7. Petitioners and Dr.

Omni MedSci Ex. 2118
Samsung Electronics Co. Ltd., et al., v. Omni MedSci - IPR2025-01252

Anthony's analysis of limitation [15.m] does not address any of the aforementioned deficiencies regarding Lisogurski in relation to claim limitation [8.m] or rely on LeBoeuf to fix those deficiencies. Petition at 58; Ex. 1003 at ¶¶ 336-38.

258. Therefore, Lisogurski and LeBoeuf do not render obvious claim 15 for at least the same reasons explained in Section X.A.2.a with respect to limitation [8.m].

259. Additionally, I understand that claim 15 includes limitation [15.n] that recites "wherein the plurality of semiconductor sources and the plurality of spatially separated detectors are located on one or more arcs," which is also recited by claims 2 and 9. Ex. 1001 at 90:6-9, 87:29-31, 88:40-42; Petition at xvi, x, xiii.

260. I understand that for limitation [15.n], Petitioners and Dr. Anthony rely on their analysis of claim 2, and they do not separately analyze limitation [15.n]. Petition at 58; Ex. 1003 at ¶¶ 339-42. Petitioners and Dr. Anthony's analysis of limitation [15.n] does not address any of the aforementioned deficiencies regarding Lisogurski and LeBoeuf in relation to claim 2. Petition at 58; Ex. 1003 at ¶¶ 339-42.

261. Therefore, Lisogurski and LeBoeuf do not render obvious limitation [15.n] for at least the same reasons explained in Section X.B.1 above with respect to claim 2.

Omni MedSci Ex. 2118
Samsung Electronics Co. Ltd., et al., v. Omni MedSci - IPR2025-01252

262. Further, I disagree that claim 15 is obvious for the same reasons explained in Section X.A.1.b above regarding my opinion that relocating Lisogurski's monitor 104 components into sensor 102 would degrade signal to noise ratio, contrary to Lisogurski's objective.

6. Dependent Claim 16

263. I disagree with Petitioners and Dr. Anthony's assertion that claim 16 is obvious over Lisogurski and LeBoeuf.

264. Claim 16 depends from independent claim 15. I understand that for claim 16, Petitioners and Dr. Anthony rely on their analyses of limitation [1.m] and claim 11, and their analyses of limitation [1.m] and claim 11 do not address any of the aforementioned deficiencies regarding Lisogurski and LeBoeuf in relation to claim 15. Petition at 57-58, 45-47, 49-51; Ex. 1003 at ¶¶ 346-49, 197-204, 253-57.

265. Therefore, Lisogurski and LeBoeuf do not render obvious claim 16 for at least the same reasons explained in Section X.B.5 above with respect to independent claim 15.

266. Also, similar to claim limitation [1.m], dependent claim 16 requires, in part, "three optical wavelengths for measuring at least a portion of the one or more of the physiological parameters." 88:51-54 (claim 16). Petitioners and Dr. Anthony's analysis of claim 16 does not address any of the aforementioned deficiencies

Omni MedSci Ex. 2118
Samsung Electronics Co. Ltd., et al., v. Omni MedSci - IPR2025-01252

regarding Lisogurski in relation to claim limitation [1.m] or rely on LeBoeuf to fix those deficiencies. Petition at 57-58; Ex. 1003 at ¶¶ 346-49.

267. Therefore, Lisogurski and LeBoeuf do not render obvious claim 16 for at least the same reasons explained in Section X.A.1.c above with respect to limitation [1.m].

268. Additionally, similar to claim 11, claim 16 recites "wherein the output signal corresponding to at least one of the optical wavelengths is used to improve measurement of at least one of the one or more physiological parameters using the output signal corresponding to the other two optical wavelengths." Ex. 1001 at 90:17-21. Petitioners and Dr. Anthony's analysis of claim 16 does not address any of the aforementioned deficiencies regarding Lisogurski in relation to this limitation in claim 11 or rely on LeBoeuf to fix those deficiencies. Petition at 57-58; Ex. 1003 at ¶¶ 346-49.

269. Therefore, Lisogurski and LeBoeuf do not render obvious claim 16 for at least the same reasons explained in Section X.A.3.a above with respect to claim 11.

7. Dependent Claim 17

270. I disagree with Petitioners and Dr. Anthony's assertion that claim 17 is obvious over Lisogurski and LeBoeuf.

Omni MedSci Ex. 2118
Samsung Electronics Co. Ltd., et al., v. Omni MedSci - IPR2025-01252

271. Claim 17 depends from both claims 15 and 16, as claim 17 depends from claim 16 that depends from independent claim 15. Petitioners and Dr. Anthony's analysis of claim 17 focuses on the additional limitations of claim 17 and does not address any of the aforementioned deficiencies regarding Lisogurski and LeBoeuf in relation to claims 15 and 16. Petition at 59-60; Ex. 1003 at ¶¶ 350-55.

272. Therefore, Lisogurski and LeBoeuf do not render obvious claim 17 for at least the same reasons explained in Section X.B.5 above with respect to independent claim 15 and in Section X.B.6 above with respect to claim 16.

273. Additionally, Lisogurski and LeBoeuf do not render obvious the limitation recited in claim 17. Claim 17 of the '455 patent recites "wherein the wearable device further comprises a reflective surface to receive and redirect at least some of the output optical light from the plurality of semiconductor sources," which I refer to herein as the "reflective surface limitation." Ex. 1001 at 90:23-26; Petition at xvi. Based on my review, Petitioners and Dr. Anthony rely on Lisogurski's disclosure of a sensor with multiple LEDs for the claimed "semiconductor sources." Petition at 30-31 ([1.b]), 47 (relying on [1.b] for [8.b]), 58 (relying on [8.b] for [15.b] of claim 15, from which claim 17 indirectly depends); Ex. 1003 at ¶¶ 119-23, 212, 300. As Petitioners and Dr. Anthony recognize, however, Lisogurski does not disclose the reflective surface limitation recited in claim 17. Petition at 59-60; Ex. 1003 at ¶¶ 350-55. So Petitioners and Dr. Anthony rely on LeBoeuf, arguing that

Omni MedSci Ex. 2118
Samsung Electronics Co. Ltd., et al., v. Omni MedSci - IPR2025-01252

the embodiment in LeBoeuf's Figure 8C includes a reflective surface that scatters and focuses light from optical emitters 24 and further arguing that "a POSITA would have been motivated to apply LeBoeuf's reflective surface teachings to Lisogurski's system." Petition at 59-60 (citing "§IX.C.2" of the Petition), 52-55 (i.e., §IX.C.2: "Motivation to Combine Lisogurski and LeBoeuf"); Ex. 1003 at ¶¶ 350-55 (citing "§IX.B.2" of the Dr. Anthony's declaration), 261-68 (i.e., Section IX.B.2: "Motivation to Combine Lisogurski and LeBoeuf").

274. Petitioners and Dr. Anthony's argument includes the following annotated version of LeBoeuf's Figure 8C in LeBoeuf:

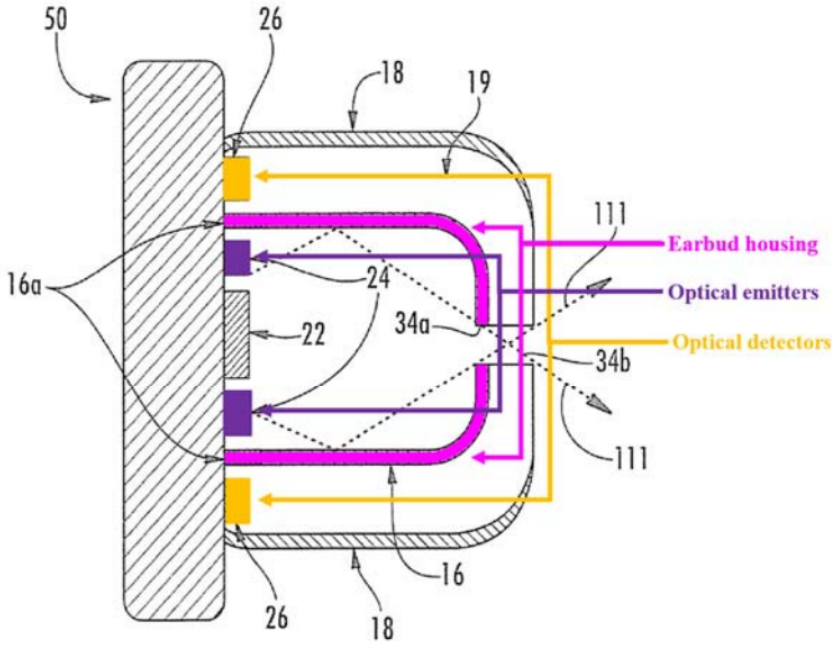

FIG. 8C

Petition at 60; Ex. 1003 at ¶ 354. I note that this embodiment depicted in

Omni MedSci Ex. 2118
Samsung Electronics Co. Ltd., et al., v. Omni MedSci - IPR2025-01252

LeBoeuf's Figure 8C is substantially similar to the embodiment depicted in LeBoeuf's Figures 8A-8B (which I discuss above with respect to claim 2) in that it also includes base 50, speaker 22, emitters 24, detectors 26, cover 18, earbud housing 16 with light blocking region 16*a*, and apertures 34*a*-34*b*, but in the Figure 8C embodiment, LeBoeuf discloses that "earbud housing 16 may be at least partially reflective to scatter light within the cavity defined by the earbud housing 16." Ex. 1026 at FIGS. 8A-8C, [0123]-[0125].

275. Lisogurski and LeBoeuf do not render obvious the reflective surface limitation of claim 17, including because (i) Petitioners and Dr. Anthony do not show that a POSITA would have been motivated to implement the reflective surface of LeBoeuf's Figure 8C embodiment in Lisogurski and (ii) indeed, a POSITA would not have been motivated to implement the reflective surface of LeBoeuf's Figure 8C embodiment in Lisogurski.

a) Previous IPRs Regarding Related Patents

276. I understand that certain portions of the Petition and Dr. Anthony's declaration rely on findings by the Board in prior IPR proceedings challenging patents related to the '455 Patent, including the '533-FWD and '484-FWD. However, the reflective surface limitation of claim 17 of the '455 Patent is not recited in the claims of either the '533 Patent or '484 Patent, and Petitioners and Dr. Anthony do not rely on the '533-FWD or '484-FWD in their analysis of claim 17.

Omni MedSci Ex. 2118
Samsung Electronics Co. Ltd., et al., v. Omni MedSci - IPR2025-01252

See Petition at 59-60; Ex. 1003 at ¶¶ 350-55. Therefore, I understand that to the extent that Petitioners and Dr. Anthony rely on the Board's findings in the '533-FWD and '484-FWD, those prior findings do not address the reflective surface limitation in claim 17 of the '455 Patent.

b) LeBoeuf's Alleged Disclosure of the Reflective Surface Limitation

277. Assuming that LeBoeuf's Figure 8C embodiment meets the reflective surface limitation of claim 17, as explained below, the combination of Lisogurski and LeBoeuf does not render obvious this reflective surface limitation, at least because a POSITA would not have been motivated to apply the alleged reflective surface teachings of LeBoeuf's Figure 8C embodiment in Lisogurski.

c) Petitioners and Dr. Anthony Do Not Show that a POSITA Would Have Been Motivated to Implement LeBoeuf's Alleged Reflective Surface Teachings in Lisogurski to Meet the Reflective Surface Limitation

278. For the reflective surface limitation in claim 17 that recites "wherein the wearable device further comprises a reflective surface to receive and redirect at least some of the output optical light from the plurality of semiconductor sources," I understand that Petitioners and Dr. Anthony argue that a POSITA would have applied LeBoeuf's alleged reflective surface teaching from its Figure 8C embodiment to Lisogurski's system to meet this limitation. Petition at 59-60 (relying on LeBoeuf's Figure 8C embodiment and asserting that a POSITA would

Omni MedSci Ex. 2118
Samsung Electronics Co. Ltd., et al., v. Omni MedSci - IPR2025-01252

have "appl[ied] LeBoeuf's [reflective surface] teachings to Lisogurski's system"); Ex. 1003 at ¶¶ 350-55 (same).

279. Petitioners and Dr. Anthony do not show, with sufficient explanation or supporting evidence, that a POSITA would have been motivated to implement LeBoeuf's alleged reflective surface teachings from the Figure 8C embodiment in Lisogurski's sensor.

280. The Petition addresses motivation to combine LeBoeuf's alleged reflective surface teachings with Lisogurski's system in a single paragraph of Petition Section IX.C.2. Petition at 53-54. The Petition's analysis of claim 17 addresses motivation to combine LeBoeuf and Lisogurski in only a single sentence that refers back to that one relevant paragraph in Petition Section IX.C.2. Petition at 60 (stating "***[a]s discussed (§IX.C.2)***, a POSITA would have been motivated to apply LeBoeuf's reflective surface teachings to Lisogurski's system" (emphasis added)).

281. Dr. Anthony addresses motivation to combine LeBoeuf's alleged arc arrangement with Lisogurski's system in only two paragraphs of Section IX.B.2. Ex. 1003 at ¶¶ 265-66. Dr. Anthony's analysis of claim 17 addresses motivation to combine LeBoeuf and Lisogurski by referring back to those two relevant paragraphs of Section IX.B.2 of his declaration. Ex. 1003 at ¶¶ 355 (stating "***[a]s I discussed***

Omni MedSci Ex. 2118
Samsung Electronics Co. Ltd., et al., v. Omni MedSci - IPR2025-01252

above in Section IX.B.2, a person of ordinary skill in the art would have been motivated to apply LeBoeuf's teachings to Lisogurski's system" (emphases added)).

282. Based on my review, Petitioners and Dr. Anthony have not provided an explanation, or supporting evidence, of specifically ***why*** LeBoeuf's teaching of a reflective surface in the Figure 8C embodiment would have been implemented in Lisogurski's sensor by a POSITA.

283. The relevant paragraphs of the Petition and Dr. Anthony's declaration appear to only argue that a POSITA would have been motivated to incorporate into Lisogurski the "reflective [surface or material]" from LeBoeuf's Figure 8C embodiment, not any of the components related to that reflective surface in LeBoeuf's Figure 8C embodiment such as base 50, speaker 22, earbud housing 16, cover 18, apertures 34*a*-34*b*, or light guiding region 19. Petition at 53-54; Ex. 1003 at ¶¶ 265-66. Those relevant paragraphs of the Petition and Dr. Anthony's declaration addressing motivation to combine do not assert clearly and specifically that a POSITA would have incorporated any such related component(s) of LeBoeuf's Figure 8C. Petition at 53-54; Ex. 1003 at ¶¶ 265-66. Instead, based on my review, those relevant paragraphs are ambiguous and assert motivation to merely "incorporate a reflective surface" (Petition at 53-54), "apply LeBoeuf's teaching of reflective surface to Lisogurski's wearable device" (Petition at 54), "apply LeBeouf's reflective surface teaching to Lisogurski's system" (Ex. 1003 at ¶ 265),

Omni MedSci Ex. 2118
Samsung Electronics Co. Ltd., et al., v. Omni MedSci - IPR2025-01252

and "apply LeBoeuf's reflective surface teachings to Lisogurski's wearable device" (Ex. 1003 at ¶ 266). *See also* Petition at 60 ("apply LeBoeuf's reflective surface teachings to Lisogurski's system"); Ex. 1003 at ¶ 355 ("apply LeBoeuf's teachings to Lisogurski's system"). In particular, the Petition's paragraph regarding motivation for the reflective surface limitation refers only to LeBoeuf's "reflective [surface or material]" and does not mention any related components of LeBoeuf's Figure 8C embodiment, such as earbud housing 16. Petition at 53-54. Also, the relevant paragraphs of Dr. Anthony's declaration mention only one related component (earbud housing 16) and only mention this component once and in describing what "LeBoeuf discloses," not in asserting an alleged motivation or combination. Ex. 1003 at ¶¶ 265-66. Therefore, based on my review, Petitioners and Dr. Anthony only argue that a POSITA would have allegedly been motivated to incorporate LeBoeuf's teaching of a reflective surface and not any related components of LeBoeuf's Figure 8C embodiment. Petition at 53-54; Ex. 1003 at ¶¶ 265-66.

284. The relevant paragraphs of the Petition and Dr. Anthony's declaration cite and rely on a single paragraph in LeBoeuf and a single paragraph in Exhibit 1041 to allege motivation. Petition at 53-54 (citing only Ex. 1026 at [0125]; Ex. 1041 at [0152]); Ex. 1003 at ¶¶ 265-66 (same). Neither of these cited paragraphs in

Omni MedSci Ex. 2118
Samsung Electronics Co. Ltd., et al., v. Omni MedSci - IPR2025-01252

LeBoeuf and Exhibit 1041 supports a motivation to incorporate LeBoeuf's reflective surface into Lisogurski's sensor.

285. Petitioners and Dr. Anthony first allege motivation by citing and relying upon the two "advantage[s]" that LeBoeuf discloses regarding its Figure 8C embodiment. Petition at 53-54 (citing Ex. 1026 at [0125]); Ex. 1003 at ¶¶ 265-66 (same). That disclosure in LeBoeuf states:

> An advantage of this configuration is that light 111 can be focused on a particular region of the ear where a particular physiological activity may be located. Also, this configuration may reduce unwanted optical signals from regions that may not be relevant to the physiological activity of interest.

Ex. 1026 at [0125]. This disclosure states that these are advantages of "***this configuration***." Ex. 1026 at [0125].

286. A POSITA would have understood that this cited disclosure's reference to "this configuration" does not refer to LeBoeuf's teaching of a reflective surface in isolation. Ex. 1026 at [0125]. Instead, a POSITA would have understood "this configuration" in the cited disclosure to mean the combination of related components in LeBoeuf's Figure 8C embodiment, including base 50, speaker 22, earbud housing 16, cover 18, the arrangement of optical emitters 24 and detectors 26, and apertures 34*a*-34*b* through which sound from speaker 22 and optical energy 111 from emitters 24 may exit earbud housing 16 and cover 18. Ex. 1026 at FIG. 8C, [0123], [0125]. Such related components constituting LeBoeuf's disclosure of

Omni MedSci Ex. 2118
Samsung Electronics Co. Ltd., et al., v. Omni MedSci - IPR2025-01252

"this configuration" in paragraph [0125] would involve at least the components depicted in green in the following annotated version of LeBoeuf's Figure 8C:

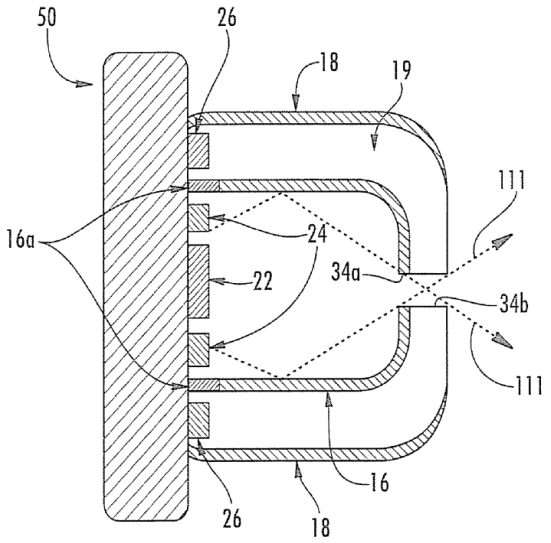

FIG. 8C

Ex. 1026 at FIG. 8C (annotated), [0125]. For example, LeBoeuf discloses for its Figure 8C embodiment that earbud housing 16 "may be at least partially reflective to scatter light [from emitters 24] within the cavity defined by the earbud housing 16," such that "optical energy 111 may exit the earbud 30 through apertures 34*a*, 34*b*, in the housing 16 and cover 18," through which "sound from the speaker 22" also passes. Ex. 1026 at [0125], [0123], FIG. 8C; *see also* Ex. 1026 at [0017] (disclosing "a light reflective material on … surfaces of the light-guiding cover). Thus, a POSITA would have understood that the two advantages that Petitioners and Dr. Anthony cite in LeBoeuf are necessarily based on the collective

Omni MedSci Ex. 2118
Samsung Electronics Co. Ltd., et al., v. Omni MedSci - IPR2025-01252

"configuration" of components in LeBoeuf's Figure 8C embodiment and are not the result of LeBoeuf's reflective surface alone. Ex. 1026 at [0125], FIG. 8C.

287. As discussed above, the relevant paragraphs of the Petition and Dr. Anthony's declaration argue motivation regarding only LeBoeuf's teaching of a reflective surface, not regarding any related components in LeBoeuf's Figure 8C embodiment. Petition at 53-54 (failing to discuss any components in LeBoeuf except the "reflective [surface or material]" itself); Ex. 1003 at ¶¶ 265-66. Thus, Petitioners and Dr. Anthony's motivation argument regarding only LeBoeuf's teaching of a reflective surface is not supported by the cited disclosure in LeBoeuf regarding advantages of the "configuration" of components in the Figure 8C embodiment. Ex. 1026 at [0125], FIG. 8C.

288. A POSITA would have understood that the advantages described in the cited disclosure of LeBoeuf, which relate to the "configuration," would not have been achieved by LeBoeuf's teaching of a reflective surface alone, without the related components in the Figure 8C embodiment, as the Petition argues. Petition at 53-54; Ex. 1026 at [0125], FIG. 8C. That is, I disagree with Petitioners' assertion that the two advantages of "focusing the optical output light on a particular region of interest" and "reducing signals from regions not of interest" would have been achieved by only "LeBoeuf's reflective material." Petition at 54 (citing Ex. 1026 at [0125]). As explained above, those two advantages are advantages of the collective

Omni MedSci Ex. 2118
Samsung Electronics Co. Ltd., et al., v. Omni MedSci - IPR2025-01252

"configuration" of components in LeBoeuf's Figure 8C embodiment. Ex. 1026 at [0125].

289. Petitioners and Dr. Anthony next allege motivation by citing and relying upon the Exhibit 1041 for its alleged teaching that "a sensor surrounded by a 'reflective' material may 'help[ ] direct light to and/or from the sensor module [ ] and a blood flow region [i.e., measurement site] within the body part.'" Petition at 53-54 (quoting Ex. 1041 at [0152]); Ex. 1003 at ¶¶ 265-66 (same). Petitioners and Dr. Anthony's motivation argument regarding incorporating into Lisogurski only LeBoeuf's teaching of a reflective surface, without the related components of LeBoeuf's Figure 8C embodiment, is not supported by the cited disclosure in Exhibit 1041.

290. A POSITA would have understood that the cited disclosure in Exhibit 1041 does not relate to merely incorporating a reflective surface into a sensor as Petitioners and Dr. Anthony allege a POSITA would have done with LeBoeuf and Lisogurski. Ex. 1041 at [0152]. Instead, the cited disclosure in Exhibit 1041 relates to the specific configurations shown in "FIGS. 24-27," in which a "light guiding region 2306" (which "may be a reflector") "surround[s] or partially surround[s] [a] sensor module 700, 800 and/or isolation region 2304" in such a way that "light guiding region 2305 helps direct light to and/or from the sensor module 700, 800 and a blood flow region," and "[i]n the case of a reflective layer, the sensor module

Omni MedSci Ex. 2118
Samsung Electronics Co. Ltd., et al., v. Omni MedSci - IPR2025-01252

700, 800 is at least partially exposed." Ex. 1041 at [0152], FIGS. 24-27. A POSITA would have understood that the benefit that Petitioners and Dr. Anthony point to regarding directing light to/from a sensor module and a blood flow region is based on the configuration of the light guiding region 2306 in Figures 24-27 relative to other related components, including sensor module 700, 800, isolation region 2304, and the at least partial exposure. Ex. 1041 at [0152], FIGS. 24-27. Exhibit 1041 does not teach that this benefit of directing light is achieved by simply incorporating a reflective surface into a sensor. Thus, a POSITA would have understood that the cited disclosure in Exhibit 1041 concerns the configuration of a reflective surface and therefore does not support Petitioners and Dr. Anthony's argument that a POSITA would have been motivated to incorporate LeBoeuf's teaching of a reflective surface into Lisogurski without discussing its configuration or also incorporating the other related components in LeBoeuf's Figure 8C embodiment.

291. Additionally, based on my review, Petitioners and Dr. Anthony have not provided an explanation, or supporting evidence, of specifically ***how*** LeBoeuf's teaching of a reflective surface would have been implemented in Lisogurski's sensor by a POSITA.

292. As discussed above, a POSITA would have understood that the reflective surface in LeBoeuf's Figure 8C embodiment is premised on and involves related components in that embodiment, including base 50, speaker 22, earbud

Omni MedSci Ex. 2118
Samsung Electronics Co. Ltd., et al., v. Omni MedSci - IPR2025-01252

housing 16, cover 18, the arrangement of optical emitters 24 and detectors 26, and apertures 34*a*-34*b*. Ex. 1026 at [0123], [0125], FIGS. 8A-8C. For example, LeBoeuf discloses that: earbud housing 16 "may be at least partially reflective to scatter light [from emitters 24] within the cavity defined by the earbud housing 16," such that "optical energy 111 may exit the earbud 30 through apertures 34*a*, 34*b*, in the housing 16 and cover 18"; those apertures 34*a*-34*b* in earbud housing 16 and cover 18 are also for "sound from the speaker 22" to pass through; earbud housing 16 "is in acoustical communication with [that] speaker 22" and "is configured to be positioned within an ear"; cover 18 "surrounds the earbud housing 16" and, together with the earbud housing 16, defines the light guiding region 19; cover 18 "collects light through end portion 18*f* and delivers the collected light to the optical detectors 26"; the optical emitters 24 and detectors 26 are arranged relative to speaker 22, earbud housing 16, and cover 18; and speaker 22, earbud housing 16, cover 18, optical emitters 24, and detectors 26 are all positioned relative to base 50. Ex. 1026 at [0123], [0125], FIGS. 8A-8C.

293. As also discussed above, Petitioners and Dr. Anthony appear to only argue that a POSITA would have been motivated to incorporate into Lisogurski the "reflective [surface or material]" from LeBoeuf's Figure 8C embodiment, not any of the related components in that embodiment such as base 50, speaker 22, earbud housing 16, cover 18, and apertures 34*a*-34*b*. Petition at 53-54; Ex. 1003 at ¶¶ 265-

Omni MedSci Ex. 2118
Samsung Electronics Co. Ltd., et al., v. Omni MedSci - IPR2025-01252

66. For example, based on my review, the relevant paragraphs of the Petition and Dr. Anthony's declaration addressing motivation to combine do not assert clearly and specifically that a POSITA would have incorporated any such related component(s) of LeBoeuf's Figure 8C embodiment into Lisogurski. Instead, those paragraphs refer merely to incorporating "a reflective surface" or applying "LeBoeuf's teaching of reflective surface," "LeBeouf's reflective surface teaching[s]." Petition at 53-54; Ex. 1003 at ¶¶ 265-66. In particular, the Petition's paragraph regarding motivation for the reflective surface limitation refers only to LeBoeuf's "reflective [surface or material]" and does not mention any related components of LeBoeuf's Figure 8C embodiment. Petition at 53-54. Therefore, based on my review, Petitioners and Dr. Anthony only argue that a POSITA would have allegedly been motivated to incorporate LeBoeuf's teaching of a reflective surface and not any related components of LeBoeuf's Figure 8C embodiment. Petition at 53-54; Ex. 1003 at ¶¶ 265-66.

294. Thus, because Petitioners and Dr. Anthony only argue that a POSITA would have incorporated LeBoeuf's teaching of a reflective surface and not the multiple related components in LeBoeuf's Figure 8C embodiment on which LeBoeuf's reflective surface is premised, they do not and cannot explain how a POSITA would have implemented such a reflective surface in Lisogurski's sensor, which does not include such components as in LeBoeuf's Figure 8C embodiment.

Omni MedSci Ex. 2118
Samsung Electronics Co. Ltd., et al., v. Omni MedSci - IPR2025-01252

The relevant portions of the Petition and Dr. Anthony's declaration contain no explanation as to how a POSITA would have implemented or configured a reflective surface in Lisogurski's sensor. Petition at 53-54; Ex. 1003 at ¶¶ 265-66. Based on my review, the relevant portions of the Petition and Dr. Anthony's declaration regarding motivation to combine for the reflective surface limitation do not contain any citation to Lisogurski or any detailed discussion of Lisogurski beyond merely referring to Lisogurski's "system" or "wearable device." Petition at 53-54; Ex. 1003 at ¶¶ 265-66.

295. To the extent that Petitioners and Dr. Anthony do argue or suggest incorporating any component(s) related to the reflective surface in LeBoeuf's Figure 8C embodiment into Lisogurski's sensor (they do not, as explained above), they nonetheless have not provided an explanation, or supporting evidence, of specifically ***why*** and ***how*** LeBoeuf's teaching of a reflective surface would have been implemented in Lisogurski's sensor by a POSITA.

296. Based on my review of the Petition and Dr. Anthony's declaration, it is unclear which, if any, related components in LeBoeuf's Figure 8C embodiment are alleged to be incorporated into Lisogurski. For example, Petitioners and Dr. Anthony ambiguously assert that a POSITA would have "appl[ied] LeBoeuf's ***teaching of reflective surface*** to Lisogurski's wearable device" (Petition at 54), "appl[ied] LeBeouf's ***reflective surface teaching*** to Lisogurski's system" (Ex. 1003

Omni MedSci Ex. 2118
Samsung Electronics Co. Ltd., et al., v. Omni MedSci - IPR2025-01252

at ¶ 265), "appl[ied] LeBoeuf's ***reflective surface teachings*** to Lisogurski's wearable device" (Ex. 1003 at ¶ 266), "appl[ied] LeBoeuf's ***reflective surface teachings*** to Lisogurski's system" (Petition at 60), and "appl[ied] LeBoeuf's ***teachings*** to Lisogurski's system" (Ex. 1003 at ¶ 355) (emphases added). Because Petitioners and Dr. Anthony do not clearly identify which, if any, related components of LeBoeuf's Figure 8C embodiment would have allegedly been incorporated into Lisogurski, they cannot explain why or how a POSITA would have been motivated to implement the reflective surface and/or such related components in Lisogurski.

297. Based on my review, to the extent that Petitioners and Dr. Anthony argue to incorporate into Lisogurski any component(s) related to the reflective surface in LeBoeuf's Figure 8C embodiment, the only such component(s) potentially addressed in their Petition and declaration is earbud housing 16, which is highlighted in their analysis of claim 17 and in their annotated version of LeBoeuf Figure 8C therein. Petition at 59-60; Ex. 1003 at ¶ 354.

298. A POSITA would have understood that LeBoeuf's earbud housing 16 is an earbud-specific component, including because earbud housing 16 is part of the "light-guiding earbud" in Figure 8C, "is configured to be positioned within an ear of a subject," "is in acoustical communication with a speaker 22," and "includes … aperture 34*a* through which sound from the speaker 22 can pass." Ex. 1026 at

Omni MedSci Ex. 2118
Samsung Electronics Co. Ltd., et al., v. Omni MedSci - IPR2025-01252

[0050], [0123], [0125]. A POSITA would have also understood that Lisogurski does not teach that its sensor can be an earbud to be placed within an ear because Lisogurski only teaches a sensor that is placed on an external site of the body and, at most, on an "earlobe" or "around or in front of the ear," but not within the ear. Ex. 1025 at 4:6-20.

299. Further, a POSITA would have understood that LeBoeuf's earbud housing 16 itself is premised on and involves other related components of LeBoeuf's Figure 8C embodiment, including base 50, speaker 22, cover 18, apertures 34*a*-34*b*, and light guiding region 19. Ex. 1026 at [0123], [0125]. And as discussed above, Petitioners and Dr. Anthony do not argue that a POSITA would have incorporated those other related components from LeBoeuf's Figure 8C embodiment into Lisogurski's sensor. Petition at 53-54, 59-60; Ex. 1003 at ¶¶ 265-66, 350-55.

300. Based on my review, Petitioners and Dr. Anthony do not consider or address the fact that earbud housing 16 is an earbud-specific component, that Lisogurski does not teach an earbud, that earbud housing 16 is related to and premised on other components in LeBoeuf's Figure 8C embodiment, or incorporation of those other related components into Lisogurski. Petition at 53-54, 59-60; Ex. 1003 at ¶¶ 265-66, 350-55. Based on my review, Petitioners and Dr. Anthony do not provide any explanation for why or how a POSITA would have implemented earbud housing 16, which is an earbud-specific component premised

Omni MedSci Ex. 2118
Samsung Electronics Co. Ltd., et al., v. Omni MedSci - IPR2025-01252

on other related components in LeBoeuf, into Lisogurski's sensor, which is not an earbud and does not contain those other related components in LeBoeuf. Petition at 53-54, 59-60; Ex. 1003 at ¶¶ 265-66, 350-55. Also, in my opinion, because earbud housing 16 is an earbud-specific component and is premised on other related components in LeBoeuf, and because Lisogurski does not teach an earbud and does not include those other related components in LeBoeuf that earbud housing 16 is based on, a POSITA would not have been motivated to incorporate earbud housing 16 into Lisogurski and would not have been capable of doing so.

301. Additionally, to the extent that Petitioners and Dr. Anthony do argue or suggest incorporating into Lisogurski's sensor one or more components related to the reflective surface in LeBoeuf's Figure 8C embodiment, such as earbud housing 16 or otherwise, then it is my opinion that such a modification is unexplained and unsupported because the relevant portion of the Petition does not mention any such component(s) from LeBoeuf's Figure 8C embodiment. Petition at 53-54. In my opinion, because the Petition's paragraph regarding motivation for the reflective surface limitation of claim 17 does not expressly identify or discuss any components of LeBoeuf's Figure 8C embodiment, the Petition thus does not and cannot explain why or how a POSITA would have been motivated to implement such an unidentified component in Lisogurski's sensor.

Omni MedSci Ex. 2118
Samsung Electronics Co. Ltd., et al., v. Omni MedSci - IPR2025-01252

d) A POSITA Would Not Have Been Motivated to Implement LeBoeuf's Alleged Reflective Surface Teachings in Lisogurski to Meet the Reflective Surface Limitation

302. As explained above, for the reflective surface limitation in claim 17 that recites "wherein the wearable device further comprises a reflective surface to receive and redirect at least some of the output optical light from the plurality of semiconductor sources," I understand that Petitioners and Dr. Anthony argue that a POSITA would have applied LeBoeuf's alleged reflective surface teaching from its Figure 8C embodiment to Lisogurski's system to meet this limitation. Petition at 59-60, 53-54; Ex. 1003 at ¶¶ 350-55, 265-66. As also explained above, Petitioners and Dr. Anthony do not show that a POSITA would have been motivated to implement LeBoeuf's alleged reflective surface teaching in Lisogurski like this. Further, a POSITA would not have been motivated to implement LeBoeuf's alleged reflective surface teaching in Lisogurski for at least the following reasons.

303. A POSITA would have understood that LeBoeuf is directed to "earbud" devices that are specifically configured to be placed within a user's ear and to transmit sound and light into the ear canal. Ex. 1026 at Abstract, [0002], [0009], [0123], FIGS. 1-12B. In particular, the embodiment shown in LeBoeuf's Figure 8C that Petitioners and Dr. Anthony rely upon for the reflective surface limitation in claim 17 is a "light-guiding earbud." Ex. 1026 at [0050], [0125]. The embodiment

Omni MedSci Ex. 2118
Samsung Electronics Co. Ltd., et al., v. Omni MedSci - IPR2025-01252

in LeBoeuf's Figures 8A-8B, which is substantially similar to the embodiment in Figure 8C, is also a "light-guiding earbud." Ex. 1026 at [0048]-[0049], [0123], [0125].

304. A POSITA would have also understood that for the embodiment shown in LeBoeuf's Figure 8C, the reflective surface is premised on and involves other related components, including base 50, speaker 22, earbud housing 16, cover 18, the arrangement of optical emitters 24 and detectors 26, and apertures 34*a*-34*b*. Ex. 1026 at [0123], [0125], FIGS. 8A-8C. For example, the reflective surface is related at least to the components depicted in green in the following annotated version of LeBoeuf's Figure 8C:

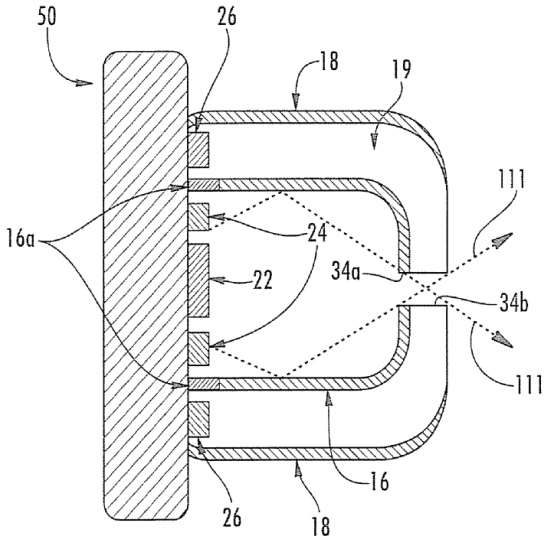

FIG. 8C

Ex. 1026 at FIG. 8C (annotated), [0123], [0125].

Omni MedSci Ex. 2118
Samsung Electronics Co. Ltd., et al., v. Omni MedSci - IPR2025-01252

305. For example, LeBoeuf discloses that: earbud housing 16 "may be at least partially reflective to scatter light [from emitters 24] within the cavity defined by the earbud housing 16," such that "optical energy 111 may exit the earbud 30 through apertures 34*a*, 34*b*, in the housing 16 and cover 18"; those apertures 34*a*-34*b* in earbud housing 16 and cover 18 are also for "sound from the speaker 22" to pass through; earbud housing 16 "is in acoustical communication with [that] speaker 22" and "is configured to be positioned within an ear"; cover 18 "surrounds the earbud housing 16" and, together with the earbud housing 16, defines the light guiding region 19; cover 18 "collects light through end portion 18*f* and delivers the collected light to the optical detectors 26"; the optical emitters 24 and detectors 26 are arranged relative to speaker 22, earbud housing 16, and cover 18; and speaker 22, earbud housing 16, cover 18, optical emitters 24, and detectors 26 are all positioned relative to base 50. Ex. 1026 at [0123], [0125], FIGS. 8A-8C.

306. A POSITA would have also understood that those other related components in Figure 8C are earbud-specific components and that the configuration of components in LeBoeuf's Figure 8C—including the reflective surface and the other related components on which that reflective surface is premised—is necessarily based on, and specific to, an earbud and the unique physical aspects of using a sound- and light-guiding earbud to deliver sound to and deliver/collect light to/from the ear. *See, e.g.*, Ex. 1026 at [0123]-[0125] ("light guiding earbud 30";

Omni MedSci Ex. 2118
Samsung Electronics Co. Ltd., et al., v. Omni MedSci - IPR2025-01252

"earbud housing 16 extending outwardly from the base 50 that is configured to be positioned within an ear"; "earbud housing 16 is in acoustical communication with a speaker 22 and includes at least one aperture 34*a* through which sound from the speaker 22 can pass"; "cover 18 includes at least one aperture 34*b* through which sound from the speaker 22 can pass"; "light guiding region 19"; "cover 18 … serves as a light guide that … collects light through end portion 18*f* and delivers the collected light to the optical detectors 26"; "earbud housing 16 may be at least partially reflective to scatter light within the cavity defined by the earbud housing 16" such that "optical energy 111 may exit the earbud 30 through apertures 34*a*, 34*b* in the housing 16 and cover 18"). For example, the reflective surface that Petitioners and Dr. Anthony rely upon in LeBoeuf's Figure 8C embodiment is located within an earbud housing 16, and that earbud housing 16, with the reflective surface, scatters light emitted by optical emitters 24 positioned around speaker 22 and directs both optical energy 11 and sound from speaker 22 through apertures 34*a*-34*b*. Ex. 1026 at FIG. 8C, [0123], [0125].

307. A POSITA would have understood that Lisogurski, in contrast to LeBoeuf, does not teach that its sensor can be an earbud placed within an ear, let alone teach sound- and light-guiding earbud components such as those described above upon which LeBoeuf's reflective surface is premised. For example, Lisogurski does not disclose that its sensor can include a speaker or make sound. At

Omni MedSci Ex. 2118
Samsung Electronics Co. Ltd., et al., v. Omni MedSci - IPR2025-01252

most, a POSITA would have understood that Lisogurski only discloses that its sensor may be placed on an "earlobe" or "around or in front of the ear"—not **within** the ear like the relied-upon embodiment in Figure 8C of LeBoeuf. Ex. 1025 at 4:6-20; Ex. 1026 at [0123], [0125]. Lisogurski only describes a sensor that is placed on, and takes measurements directly from, an **external site** on a patient. Ex. 1025 at 4:6-20 (describing suitable sensor locations as a fingertip, toe, forehead, earlobe, foot, neck, wrist, thigh, ankle, and around or in front of the ear).

308. Based on my review, Petitioners and Dr. Anthony fail to recognize or address, as explained above, that (i) the reflective surface that they rely upon in LeBoeuf's Figure 8C is premised on other earbud-specific components, (ii) the configuration of components in LeBoeuf's Figure 8C, including the reflective surface and related components, is specific to an earbud, and (iii) Lisogurski does not teach that its sensor can be an earbud. Petition at 53-54, 59-60; Ex. 1003 at ¶¶ 265-66, 350-55; Ex. 1025 at 4:6-20; Ex. 1026 at [0123], [0125].

309. Because Lisogurski's sensor does not include the related components upon which LeBoeuf's reflective surface in the Figure 8C embodiment is premised, as explained above, and Petitioners and Dr. Anthony do not argue that Lisogurski would have been modified to include those related components, a POSITA would not have been motivated to implement LeBoeuf's reflective surface in Lisogurski nor capable of doing so. Ex. 1026 at FIG. 8C; [0123], [0125].

Omni MedSci Ex. 2118
Samsung Electronics Co. Ltd., et al., v. Omni MedSci - IPR2025-01252

310. Also, because Lisogurski does not teach or suggest that its sensor could be an earbud or placed within the ear, a POSITA would not have modified Lisogurski's sensor based on LeBoeuf's Figure 8C embodiment, which teaches an earbud-specific configuration that includes a reflective surface in configuration with related earbud-specific components, as explained above. Ex. 1026 at FIG. 8C, [0123], [0125].

e) Dr. Anthony Improperly Combines Two Different LeBoeuf Embodiments Without Explanation

311. In my opinion, Dr. Anthony improperly combines features from two different embodiments in LeBoeuf—Figures 8A-8B and Figure 8C—without explaining why a POSITA would have combined these separate embodiments. Ex. 1003 at ¶¶ 275-279, 350-355.

312. For the arc limitation in limitation [15.n] of claim 15 (and also in claim 2), Dr. Anthony relies on the arrangement of optical emitters 24 and optical detectors 26 depicted in LeBoeuf's Figure 8B. Ex. 1003 at ¶¶ 275-279; Ex. 1026 at FIG. 8B. LeBoeuf describes Figure 8B as "a cross-sectional view of the earbud of FIG. 8A taken along lines 8B-8B." Ex. 1026 at [0049].

313. For the reflective surface limitation here in claim 17 that depends indirectly from claim 15 (and also in 6 that depends indirectly from claim 2), Dr. Anthony relies on the partially reflective earbud housing 16 depicted in LeBoeuf's

Omni MedSci Ex. 2118
Samsung Electronics Co. Ltd., et al., v. Omni MedSci - IPR2025-01252

Figure 8C. Ex. 1003 at ¶¶ 350-355; Ex. 1026 at FIG. 8C, ¶[0125]. LeBoeuf describes Figure 8C as "a side section view of a light-guiding earbud for a headset, according to some embodiments of the present invention." Ex. 1026 at [0050]. LeBoeuf introduces Figure 8C separately from Figure 8A, stating: "In some embodiments, as illustrated in FIG. 8C, the earbud housing 16 may be at least partially reflective to scatter light within the cavity defined by the earbud housing 16." Ex. 1026 at [0125].

314. Figure 8C is a different embodiment from Figures 8A and 8B. The use of separate figure descriptions and the separate "some embodiments" language indicates these are different embodiments. Ex. 1026 at [0049], [0050].

315. Unlike the Figures 8A-8B embodiment, where LeBoeuf provides both a side section view (Figure 8A) and a cross-sectional view (Figure 8B), LeBoeuf provides only one view for the Figure 8C embodiment. Ex. 1026 at FIG. 8A-8C, [0048]-[0050], [0125]. One cannot determine from this single view whether the emitters and detectors in the Figure 8C embodiment are arranged in an arc.

Omni MedSci Ex. 2118
Samsung Electronics Co. Ltd., et al., v. Omni MedSci - IPR2025-01252

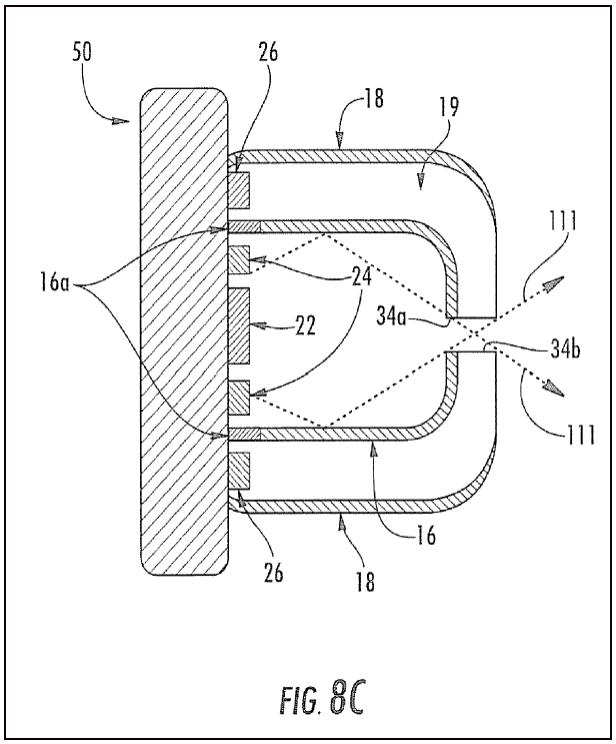

Ex. 1026 at FIG. 8C

316. Figure 8C introduces the reflective earbud housing feature ("earbud housing 16 may be at least partially reflective to scatter light within the cavity"), which is not disclosed in connection with the Figures 8A-8B embodiment. Ex. 1026 at [0123]-[0125].

317. Dr. Anthony agreed that Figure 8C is a different embodiment:

Q. ***Figure 8C is a different embodiment relative to Figures 8A and 8B***. Correct?

Omni MedSci Ex. 2118
Samsung Electronics Co. Ltd., et al., v. Omni MedSci - IPR2025-01252

A. So in Paragraph 125, in some embodiments, for example, as illustrated in Figure 8C, the earbud housing may be at least -- 16, may be at least partially reflective to scatter light within the cavity, defined by the earbud housing 16. In such case, the optical energy may exit the earbud through apertures 34A and B in the housing 16, and cover 18. An advantage of this configuration is that light can be focused on a particular region of the ear or a particular physiological activity may be located.

This configuration may reduce unwanted optical signals from regions that may not be relevant to the physiological activity of interest. 8C shows apertures 34 A and B positioned towards the tympanic membrane. The apertures may be located at one or other locations along the earbud, et cetera. ***So it's slightly different embodiment, yes.***

Q. Different embodiment. Correct?

A. As I said, ***it's a slightly different embodiment*** that has the earbud housing 16 being partially reflective to the scatter.

As you pointed out, when comparing 8A with the dotted lines of the light going through 16 versus 8C, where they are not.

Q. Okay. ***And if we look at Figure 8C, we see in this side view two detectors 26. Correct?***

A. In 8C?

Omni MedSci Ex. 2118
Samsung Electronics Co. Ltd., et al., v. Omni MedSci - IPR2025-01252

Q. Yes.

A. ***Yeah. We see two detectors, yes.***

Q. And -- and ***you also see***, ***within earbud housing 16, there are two emitters 24. Correct***?

A. ***Yes***, in that cross-sectional view.

Ex. 2045 at 178:9-179:17 (emphases added).

318. In my opinion, a POSITA reviewing LeBoeuf would not have understood that the Figure 8C embodiment necessarily includes the arc arrangement depicted in the Figure 8A-8B embodiment. Figure 8C is a side section view—that provides only one view of the earbud embodiment depicting only two optical emitters 24 and two optical detectors 26. Ex. 1026 at FIG. 8C, [0050], [0125]. And there is no cross-sectional view of the Figure 8C embodiment (analogous to Figure 8B for the Figure 8A embodiment) that would reveal any arc arrangement. Ex. 1026 at FIG. 8A-8C, ¶¶[0048]-[0050], [0125]. A POSITA would not assume that the Figure 8C embodiment has the same internal arrangement as the Figures 8A-8B embodiment merely because they are both earbuds—particularly given that LeBoeuf discloses that "[v]arious configurations and arrangements of optical emitters and detectors may be utilized." Ex. 1026 at [0123].

319. Dr. Anthony's declaration does not address the fact that Figures 8A-8B and Figure 8C are different embodiments. Ex. 1003 at ¶¶ 262-268, 275-279, 350-

Omni MedSci Ex. 2118
Samsung Electronics Co. Ltd., et al., v. Omni MedSci - IPR2025-01252

355. Dr. Anthony does not explain why a POSITA would have combined the arc arrangement from the Figures 8A-8B embodiment with the reflective surface from the Figure 8C embodiment. Ex. 1003 at ¶¶ 262-268, 275-279, 350-355. This is particularly significant given that the claims require both features together because the "reflective surface" claims (claims 6, and 17) depend from the "arc" claims (claims 2, and 15, respectively). Ex. 1001 at 87:27-54 (claim 6 depends from claim 5, which depends from claim 4, which depends from claim 3, which depends from claim 2); 90:6-26 (claim 17 depends from claim 16, which depends from claim 15). Dr, Anthony's theory necessarily requires combining features from these two different embodiments. The need to combine features from different embodiments within LeBoeuf—without any explanation of motivation or reasonable expectation of success for doing so—further undermines Dr. Anthony's obviousness theory.

320. Additionally, combining the alleged arc arrangement from Figures 8A-8B with the reflective surface from Figure 8C exacerbates the contradiction identified above regarding Dr. Anthony's motivations. The arc arrangement from Figures 8A-8B is motivated by the desire to spread light across tissue, while the reflective surface from Figure 8C is motivated by the desire to focus light onto a particular region. Ex. 1003 at ¶¶ 262-268, 270-279, 350-355. A POSITA would not have combined these features from different embodiments to achieve contradictory objectives.

Omni MedSci Ex. 2118
Samsung Electronics Co. Ltd., et al., v. Omni MedSci - IPR2025-01252

f) Dr. Anthony's Alleged Motivations for the Arc and Reflective Surface Limitations Are Contradictory

321. As I explained in Section X.B.1.e above with respect to claim 2, Dr. Anthony's stated motivations for the arc limitation and the reflective surface limitation are internally contradictory. Ex. 1003 at ¶¶ 353, 276. My opinion and explanation in Section X.B.1.e above also apply here to claim 17, which recites the reflective surface limitation.

C. Ground 3: Obviousness Based on Lisogurski and Tran (Claims 1, 8, 12, and 15)

322. I understand that Petitioners and Dr. Anthony argue for Ground 3 that claims 1, 8, 12, and 15 of the '455 Patent are obvious over Lisogurski and Tran. Petition at 8; Ex. 1003 at ¶ 71; *see also* Petition at 60-73; Ex. 1003 at ¶¶ 356-421. I disagree for at least the reasons provided below.

1. Independent Claims 1, 8, 15

323. I disagree with Petitioners and Dr. Anthony's assertion that claims 1, 8, and 15 are obvious over Lisogurski and Tran.

324. For Ground 3, Petitioners and Dr. Anthony's analysis of claims 1, 8, and 15 focuses on limitations [1.pre], [8.pre], and [15.pre] and does not address, much less use Tran to cure, any of the aforementioned deficiencies regarding Lisogurski in relation to claims 1, 8, and 15. Petition at 64-65; Ex. 1003 at ¶¶ 375-76.

Omni MedSci Ex. 2118
Samsung Electronics Co. Ltd., et al., v. Omni MedSci - IPR2025-01252

325. Therefore, Lisogurski and Tran do not render obvious claims 1, 8, and 15 for at least the same reasons explained in Sections X.A.1, X.A.2, and X.B.5 above with respect to claims 1, 8, and 15.

326. Additionally, the combination in Ground 3 does not render obvious claim 15 because Petitioners and Dr. Anthony rely on LeBoeuf for limitation [15.n], and LeBoeuf is not included in the asserted combination of references for Ground 3. That is, the combination of Lisogurski and Tran asserted for Ground 3 does not render obvious limitation [15.n] because (i) Petitioners and Dr. Anthony acknowledge that Lisogurski itself does not render obvious limitation [15.n], as they rely on Lisogurski in combination with LeBoeuf for limitation [15.n], and (ii) they do not assert that Tran cures the deficiency regarding Lisogurski in relation to limitation [15.n] for Ground 3, as limitation [15.n] is not even addressed in Ground 3. Petition at 55-58 (relying on Lisogurski in combination with LeBoeuf for claim 2 and relying on this analysis of claim 2 for limitation [15.n]), 64-65 (addressing only limitations [1.pre], [8.pre], and [15.pre] of claims 1, 8, and 15 in Ground 3); Ex. 1003 at ¶¶ 339-42, 270-79, 375-76.

2. Dependent Claim 12

327. I disagree with Petitioners and Dr. Anthony's assertion that claim 12 is obvious over Lisogurski and Tran.

Omni MedSci Ex. 2118
Samsung Electronics Co. Ltd., et al., v. Omni MedSci - IPR2025-01252

328. Claim 12 depends from both claims 8 and 11, as claim 12 depends from claim 11 that depends from independent claim 8. I understand that for claim 12, Petitioners and Dr. Anthony rely on their analysis of claim 5 (in Ground 4 below), and their analysis of claim 5 does not address any of the aforementioned deficiencies regarding Lisogurski in relation to claims 8 and 11. Petition at 71, 65-68; Ex. 1003 at ¶¶ 405-07, 377-91. I further understand that Petitioners and Dr. Anthony's analysis of claim 12, including their analysis of claim 5 that they rely upon for claim 12, does not rely on Tran to cure the aforementioned deficiencies regarding Lisogurski in relation to claims 8 and 11. Petition at 71, 65-68; Ex. 1003 at ¶¶ 405-07, 377-91.

329. Therefore, Lisogurski and Tran do not render obvious claim 12 for at least the same reasons explained in Section X.A.2 above with respect to independent claim 8 and in Section X.A.3 above with respect to claim 11.

D. Ground 4: Obviousness Based on Lisogurski, LeBoeuf, and Tran (Claims 5-7, 13-14, and 18-20)

330. Petitioners and Dr. Anthony argue for Ground 4 that claims 5-7, 13-14, and 18-20 of the '455 Patent are obvious over Lisogurski, LeBoeuf, and Tran. Petition at 8; Ex. 1003 at ¶ 71; *see also* Petition at 60-73; Ex. 1003 at ¶¶ 356-421. I disagree for at least the reasons provided below.

Omni MedSci Ex. 2118
Samsung Electronics Co. Ltd., et al., v. Omni MedSci - IPR2025-01252

1. Dependent Claim 5

331. I disagree with Petitioners and Dr. Anthony's assertion that claim 5 is obvious over Lisogurski, LeBoeuf, and Tran.

332. Claim 5 depends from claims 1, 2, and 4, as claim 5 depends from claim 4 that depends from claim 3 that depends from claim 2 that depends from independent claim 1. Petitioners and Dr. Anthony's analysis of claim 5 focuses on the additional limitations of claim 5 and does not address any of the aforementioned deficiencies regarding Lisogurski in relation to claim 1 or the aforementioned deficiencies regarding Lisogurski and LeBoeuf in relation to claims 2 and 4. Petition at 65-68; Ex. 1003 at ¶¶ 377-91. Petitioners and Dr. Anthony's analysis of claim 5 does not rely on LeBoeuf or Tran to cure the aforementioned deficiencies regarding Lisogurski in relation to claim 1 and does not rely on Tran to cure the aforementioned deficiencies regarding Lisogurski and LeBoeuf in relation to claims 2 and 4. Petition at 65-68; Ex. 1003 at ¶¶ 377-91.

333. Therefore, Lisogurski, LeBoeuf, and Tran do not render obvious claim 5 for at least the same reasons explained in Section X.A.1 above with respect to independent claim 1, in Section X.B.1 above with respect to claim 2, and in Section X.B.2 above with respect to claim 4.

Omni MedSci Ex. 2118
Samsung Electronics Co. Ltd., et al., v. Omni MedSci - IPR2025-01252

2. Dependent Claim 6

334. I disagree with Petitioners and Dr. Anthony's assertion that claim 6 is obvious over Lisogurski, LeBoeuf, and Tran.

335. Claim 6 depends from claims 1, 2 and 4, as claim 6 depends from claim 5 that depends from claim 4 that depends from claim 3 that depends from claim 2 that depends from independent claim 1. For claim 6, Petitioners and Dr. Anthony rely on their analysis of claim 17, and their analysis of claim 17 does not address any of the aforementioned deficiencies regarding Lisogurski in relation to claim 1 or the aforementioned deficiencies regarding Lisogurski and LeBoeuf in relation to claims 2 and 4. Petition at 68, 59-60; Ex. 1003 at ¶¶ 392-93, 350-55. Petitioners and Dr. Anthony's analysis of claim 6, including their analysis of claim 17 that they rely upon for claim 6, does not rely on LeBoeuf or Tran to cure the aforementioned deficiencies regarding Lisogurski in relation to claim 1 and does not rely on Tran to cure the aforementioned deficiencies regarding Lisogurski and LeBoeuf in relation to claims 2 and 4. Petition at 68, 59-60; Ex. 1003 at ¶¶ 392-93, 350-55.

336. Therefore, Lisogurski, LeBoeuf, and Tran do not render obvious claim 6 for at least the same reasons explained in Section X.A.1 above with respect to independent claim 1, in Section X.B.1 above with respect to claim 2, and in Section X.B.2 above with respect to claim 4.

Omni MedSci Ex. 2118
Samsung Electronics Co. Ltd., et al., v. Omni MedSci - IPR2025-01252

337. Additionally, claim 6 recites "wherein the wearable device further comprises a reflective surface to receive and redirect at least some of the output optical light from the plurality of semiconductor sources," which is also recited by claim 17. Ex. 1001 at 87:51-54, 90:23-26; Petition at x, xvi.

338. For claim 6, Petitioners and Dr. Anthony rely on their analysis of claim 17, and they do not separately analyze claim 6. Petition at 68; Ex. 1003 at ¶¶ 392-93. Petitioners and Dr. Anthony's analysis of claim 6 does not address any of the aforementioned deficiencies regarding Lisogurski and LeBoeuf in relation to claim 17. Petition at 68; Ex. 1003 at ¶¶ 392-93. Petitioners and Dr. Anthony's analysis of claim 6 does not rely on Tran to cure the aforementioned deficiencies regarding Lisogurski and LeBoeuf in relation to claim 17. Petition at 68; Ex. 1003 at ¶¶ 392-93.

339. Therefore, Lisogurski, LeBoeuf, and Tran do not render obvious claim 6 for at least the same reasons explained in Section X.B.7 above with respect to claim 17.

3. Dependent Claim 7

340. I disagree with Petitioners and Dr. Anthony's assertion that claim 7 is obvious over Lisogurski, LeBoeuf, and Tran.

341. Claim 7 depends from claims 1, 2, 4, and 6, as claim 7 depends from claim 6 that depends from claim 5 that depends from claim 4 that depends from

Omni MedSci Ex. 2118
Samsung Electronics Co. Ltd., et al., v. Omni MedSci - IPR2025-01252

claim 3 that depends from claim 2 that depends from independent claim 1. Petitioners and Dr. Anthony's analysis of claim 7 focuses on the additional limitations of claim 7 and does not address any of the aforementioned deficiencies regarding Lisogurski in relation to claim 1, the aforementioned deficiencies regarding Lisogurski and LeBoeuf in relation to claims 2 and 4, or the aforementioned deficiencies regarding Lisogurski, LeBoeuf, and Tran in relation to claim 6. Petition at 68-70; Ex. 1003 at ¶¶ 394-404. Petitioners and Dr. Anthony's analysis of claim 7 does not rely on LeBoeuf or Tran to cure the aforementioned deficiencies regarding Lisogurski in relation to claim 1 and does not rely on Tran to cure the aforementioned deficiencies regarding Lisogurski and LeBoeuf in relation to claims 2 and 4. Petition at 68-70; Ex. 1003 at ¶¶ 394-404.

342. Therefore, Lisogurski, LeBoeuf, and Tran do not render obvious claim 7 for at least the same reasons explained in Section X.A.1 above with respect to independent claim 1, in Section X.B.1 above with respect to claim 2, in Section X.B.2 above with respect to claim 4, and in Section X.D.2 above with respect to claim 6.

4. Dependent Claim 13

343. I disagree with Petitioners and Dr. Anthony's assertion that claim 13 is obvious over Lisogurski, LeBoeuf, and Tran.

Omni MedSci Ex. 2118
Samsung Electronics Co. Ltd., et al., v. Omni MedSci - IPR2025-01252

344. Claim 13 depends from both claims 8 and 11, as claim 13 depends from claim 12 that depends from claim 11 that depends from independent claim 8. For claim 13, Petitioners and Dr. Anthony rely on their analysis of claim 17, and their analysis of claim 17 does not address any of the aforementioned deficiencies regarding Lisogurski in relation to claims 8 and 11. Petition at 71, 59-60; Ex. 1003 at ¶¶ 408-09, 350-55. Petitioners and Dr. Anthony's analysis of claim 13, including their analysis of claim 17 that they rely upon for claim 13, does not rely on LeBoeuf or Tran to cure the aforementioned deficiencies regarding Lisogurski in relation to claims 8 and 11. Petition at 71, 59-60; Ex. 1003 at ¶¶ 408-09, 350-55.

345. Therefore, Lisogurski, LeBoeuf, and Tran do not render obvious claim 13 for at least the same reasons explained in Section X.A.2 above with respect to independent claim 8 and in Section X.A.3 above with respect to claim 11.

346. Additionally, claim 13 recites "wherein the wearable device further comprises a reflective surface positioned to receive and redirect at least some of the output optical light from the plurality of semiconductor sources," which is substantially the same (except for the term "positioned") as the limitations recited by claims 17 and 6. Ex. 1001 at 88:64-67, 90:23-26, 87:51-54; Petition at xiii-xiv, xvi, x.

347. For claim 13, Petitioners and Dr. Anthony rely on their analysis of claim 17, and they do not separately analyze claim 13. Petition at 71; Ex. 1003 at

Omni MedSci Ex. 2118
Samsung Electronics Co. Ltd., et al., v. Omni MedSci - IPR2025-01252

¶¶ 408-09. Petitioners and Dr. Anthony's analysis of claim 13 does not address any of the aforementioned deficiencies regarding Lisogurski and LeBoeuf in relation to claim 17. Petition at 71; Ex. 1003 at ¶¶ 408-09. Petitioners and Dr. Anthony's analysis of claim 13 does not rely on Tran to cure the aforementioned deficiencies regarding Lisogurski and LeBoeuf in relation to claim 17. Petition at 71; Ex. 1003 at ¶¶ 408-09.

348. Therefore, Lisogurski, LeBoeuf, and Tran do not render obvious claim 13 for at least the same reasons explained in Section X.B.7 above with respect to claim 17.

5. Dependent Claim 14

349. I disagree with Petitioners and Dr. Anthony's assertion that claim 14 is obvious over Lisogurski, LeBoeuf, and Tran.

350. Claim 14 depends from claims 8, 11, and 13, as claim 14 depends from claim 13 that depends from claim 12 that depends from claim 11 that depends from independent claim 8. For claim 14, Petitioners and Dr. Anthony rely on their analysis of claim 7, and their analysis of claim 7 does not address any of the aforementioned deficiencies regarding Lisogurski in relation to claims 8 and 11 or the aforementioned deficiencies regarding Lisogurski, LeBoeuf, and Trans in relation to claim 13. Petition at 71, 68-70; Ex. 1003 at ¶¶ 408-09, 394-404. Petitioners and Dr. Anthony's analysis of claim 14, including their analysis of claim

Omni MedSci Ex. 2118
Samsung Electronics Co. Ltd., et al., v. Omni MedSci - IPR2025-01252

7 that they rely upon for claim 14, does not rely on LeBoeuf or Tran to cure the aforementioned deficiencies regarding Lisogurski in relation to claims 8 and 11. Petition at 71, 68-70; Ex. 1003 at ¶¶ 408-09, 394-404.

351. Therefore, Lisogurski, LeBoeuf, and Tran do not render obvious claim 14 for at least the same reasons explained in Section X.A.2 above with respect to independent claim 8, in Section X.A.3 above with respect to claim 11, and in Section X.D.4 above with respect to claim 13.

6. Dependent Claims 18-20

352. I disagree with Petitioners and Dr. Anthony's assertion that claims 18-20 are obvious over Lisogurski, LeBoeuf, and Tran.

353. Claims 18-20 each depend from claims 15, 16, and 17, as claim 20 depends from claim 19 that depends from claim 18 that depends from claim 17 that depends from claim 16 that depends from claim 15. For claims 18 and 20, Petitioners and Dr. Anthony rely on their analysis of claims 5 and 7, respectively, and their analyses of claims 5 and 7 does not address any of the aforementioned deficiencies regarding Lisogurski and LeBoeuf in relation to claims 15, 16, and 17. Petition at 71-73, 65-70; Ex. 1003 at ¶¶ 412-13, 419-21, 377-91, 394-404. Also, Petitioners and Dr. Anthony's analysis of claim 19 focuses on the additional limitations of claim 19 and does not address any of the aforementioned deficiencies regarding Lisogurski and LeBoeuf in relation to claims 15, 16, and 17. Petition at 71-72; Ex. 1003 at ¶¶

Omni MedSci Ex. 2118
Samsung Electronics Co. Ltd., et al., v. Omni MedSci - IPR2025-01252

414-18. Petitioners and Dr. Anthony's analysis of claims 18-20, including their analysis of claims 5 and 7 that they rely upon for claims 18 and 20, does not rely on Tran to cure the aforementioned deficiencies regarding Lisogurski and LeBeouf in relation to claims 15, 16, and 17. Petition at 71-73, 65-70; Ex. 1003 at ¶¶ 412-21, 377-91, 394-404.

354. Therefore, Lisogurski, LeBoeuf, and Tran do not render obvious claims 18-20 for at least the same reasons explained in Section X.B.5 above with respect to independent claim 15, in Section X.B.6 above with respect to claim 16, and in Section X.B.7 above with respect to claim 17.

E. Ground 5: Obviousness Based on Lisogurski and Carlson (Claims 1, 8, and 11)

355. Petitioners and Dr. Anthony argue for Ground 5 that claims 1, 8, and 11 of the '455 Patent are obvious over Lisogurski and Carlson. Petition at 8; *see also* Petition at 73-80; Ex. 1003 at ¶¶ 71, 422-48. I disagree.

356. Ground 5 is similar to Ground 1 except that Petitioners and Dr. Anthony argue the combination of Lisogurski (the only asserted reference in Ground 1) with Carlson for Ground 5. Petition at 8; Ex. 1003 at ¶ 71. Also, the only claims or limitations addressed for Grounds 5-8 are limitations [1.c], [8.c], and [15.c] and claims 7, 14, and 20—of which, only limitations [1.c] and [8.c] are relevant for Ground 5, which challenges claims 1, 8, and 11 like Ground 1. Petition at 8, 73-80;

Omni MedSci Ex. 2118
Samsung Electronics Co. Ltd., et al., v. Omni MedSci - IPR2025-01252

Ex. 1003 at ¶¶ 71, 422-48. Petitioners and Dr. Anthony's analysis for Ground 5 does not address any of the aforementioned deficiencies regarding Lisogurski in relation to claims 1, 8, and 11 as explained above for Ground 1 or rely upon Carlson to cure those deficiencies. *See* Petition at 73-80; Ex. 1003 at ¶¶ 422-48.

357. Therefore, Lisogurski and Carlson do not render obvious claims 1, 8 and 11 for at least the same reasons explained above with respect to Ground 1.

F. Ground 6: Obviousness Based on Lisogurski, LeBoeuf, and Carlson (Claims 2-4, 9-10, and 15-17)

358. Petitioners and Dr. Anthony argue for Ground 6 that claims 2-4, 9-10, and 15-17 of the '455 Patent are obvious over Lisogurski, LeBoeuf, and Carlson. Petition at 8; *see also* Petition at 73-80; Ex. 1003 at ¶¶ 71, 422-48. I disagree.

359. Ground 6 is similar to Ground 2 except that Petitioners and Dr. Anthony argue the combination of Lisogurski and LeBoeuf (the only asserted references in Ground 2) with Carlson for Ground 6. Petition at 8; Ex. 1003 at ¶ 71. Also, the only claims or limitations addressed for Grounds 5-8 are limitations [1.c], [8.c], and [15.c] and claims 7, 14, and 20—of which, only limitation [15.c] is relevant for Ground 6, which challenges claims 2-4, 9-10, and 15-17 like Ground 2. Petition at 8, 73-80; Ex. 1003 at ¶¶ 71, 422-48. Petitioners and Dr. Anthony's analysis for Ground 6 does not address any of the aforementioned deficiencies regarding Lisogurski and LeBoeuf in relation to claims 2-4, 9-10, and 15-17 as explained above for Ground 2

Omni MedSci Ex. 2118
Samsung Electronics Co. Ltd., et al., v. Omni MedSci - IPR2025-01252

or rely upon Carlson to cure those deficiencies. *See* Petition at 73-80; Ex. 1003 at ¶¶ 422-48.

360. Therefore, Lisogurski, LeBoeuf, and Carlson do not render obvious claims 2-4, 9-10, and 15-17 for at least the same reasons explained above with respect to Ground 2.

G. Ground 7: Obviousness Based on Lisogurski, Tran, and Carlson (Claims 1, 8, 12, and 15)

361. Petitioners and Dr. Anthony argue for Ground 7 that claims 1, 8, 12, and 15 of the '455 Patent are obvious over Lisogurski, Tran, and Carlson. Petition at 8; *see also* Petition at 73-80; Ex. 1003 at ¶¶ 71, 422-48. I disagree.

362. Ground 7 is similar to Ground 3 except that Petitioners and Dr. Anthony argue the combination of Lisogurski and Tran (the only asserted references in Ground 3) with Carlson for Ground 7. Petition at 8; Ex. 1003 at ¶ 71. Also, the only claims or limitations addressed for Grounds 5-8 are limitations [1.c], [8.c], and [15.c] and claims 7, 14, and 20—of which, only limitations [1.c], [8.c], and [15.c] are relevant for Ground 7, which challenges claims 1, 8, 12, and 15 like Ground 3. Petition at 8, 73-80; Ex. 1003 at ¶¶ 71, 422-48. Petitioners and Dr. Anthony's analysis for Ground 7 does not address any of the aforementioned deficiencies regarding Lisogurski and Tran in relation to claims 1, 8, 12, and 15 as explained

Omni MedSci Ex. 2118
Samsung Electronics Co. Ltd., et al., v. Omni MedSci - IPR2025-01252

above for Ground 3 or rely upon Carlson to cure those deficiencies. *See* Petition at 73-80; Ex. 1003 at ¶¶ 422-48.

363. Therefore, Lisogurski, Tran, and Carlson do not render obvious claims 1, 8, 12, and 15 for at least the same reasons explained above with respect to Ground 3.

H. Ground 8: Obviousness Based on Lisogurski, LeBoeuf, Tran, and Carlson (Claims 5-7, 13-14, and 18-20)

364. Petitioners and Dr. Anthony argue for Ground 7 that claims 5-7, 13-14, 18-20 of the '455 Patent are obvious over Lisogurski, LeBoeuf, Tran, and Carlson. Petition at 8; *see also* Petition at 73-80; Ex. 1003 at ¶¶ 71, 422-48. I disagree.

365. Ground 8 is similar to Ground 4 except that Petitioners and Dr. Anthony argue the combination of Lisogurski, LeBoeuf, and Tran (the only asserted references in Ground 4) with Carlson for Ground 8. Petition at 8; Ex. 1003 at ¶ 71. Also, the only claims or limitations addressed for Grounds 5-8 are limitations [1.c], [8.c], and [15.c] and claims 7, 14, and 20—of which, only claims 7, 14, and 20 are relevant for Ground 8, which challenges claims 5-7, 13-14, and 18-20 like Ground 4. Petition at 8, 73-80; Ex. 1003 at ¶¶ 71, 422-48. Petitioners and Dr. Anthony's analysis for Ground 8 does not address any of the aforementioned deficiencies regarding Lisogurski, LeBoeuf, and Tran in relation to claims 5-7, 13-14, and 18-20

Omni MedSci Ex. 2118
Samsung Electronics Co. Ltd., et al., v. Omni MedSci - IPR2025-01252

as explained above for Ground 4 or rely upon Carlson to cure those deficiencies. *See* Petition at 79-80; Ex. 1003 at ¶¶ 443-48.

366. Therefore, Lisogurski, LeBoeuf, Tran, and Carlson do not render obvious claims 5-7, 13-14, and 18-20 for at least the same reasons explained above with respect to Ground 4.

I. Secondary Considerations of Non-Obviousness

367. I understand that the law recognizes the importance of certain objective indicia, commonly referred to as secondary considerations of non-obviousness, as an important part of the obviousness inquiry under 35 U.S.C. § 103. It is my understanding, that these secondary considerations include, among other things, commercial success of products practicing the claimed inventions, long-felt but unsolved need in the art, failure of others to arrive at the claimed solutions, industry praise and recognition, copying by competitors, licensing activity, and unexpected results. It is my understanding that evidence of secondary considerations must always when present be considered en route to a determination of obviousness and that such evidence may often be the most probative and cogent evidence in the record.

368. It is my understanding that these secondary considerations serve as a critical check against the hindsight bias that inevitably accompanies any post-hoc reconstruction of the inventive process. I understand that secondary considerations

Omni MedSci Ex. 2118
Samsung Electronics Co. Ltd., et al., v. Omni MedSci - IPR2025-01252

serve to resist the temptation to read into the prior art the teachings of the invention in issue. I also understand that secondary considerations may often establish that an invention appearing to have been obvious in light of the prior art was not.

369. Non-obviousness of the ’455 Patent is shown by evidence of a long-felt need in the industry that went unmet until the patented inventions provided a solution, as well as evidence that members in the industry, such as Samsung, responded to the ’455 Patent’s innovations by copying the patented technology rather than designing around it. This evidence, viewed together, helps to validate and confirm my opinions that the claimed inventions represented a meaningful advance over the prior art, not merely an obvious combination of known elements.

1. Copying

370. For the reasons set forth below, evidence demonstrates a pattern in which Samsung was directly exposed to the specific patented technologies disclosed and claimed in the ’455 Patent through a series of in-person meetings, virtual conferences, and detailed presentations by Dr. Islam. Ex. 2100 at ¶¶ 7-21. Samsung subsequently implemented those teachings in its Accused Products (I refer herein to Samsung’s products shown in Exhibit 2118 as the “Accused Products.”)

Omni MedSci Ex. 2118
Samsung Electronics Co. Ltd., et al., v. Omni MedSci - IPR2025-01252

a) Dr. Islam's Meetings with Samsung and Disclosure of Omni MedSci's Patented Technology

(1) [redacted]

371. [redacted].

372. [redacted]

Omni MedSci Ex. 2118
Samsung Electronics Co. Ltd., et al., v. Omni MedSci - IPR2025-01252

[redacted]

Omni MedSci Ex. 2118
Samsung Electronics Co. Ltd., et al., v. Omni MedSci - IPR2025-01252

[redacted]

(2) [redacted]

376. [redacted]

377. [redacted]

Omni MedSci Ex. 2118
Samsung Electronics Co. Ltd., et al., v. Omni MedSci - IPR2025-01252

[redacted]

(3) [redacted]

378. [redacted]

(4) [redacted]

379. [redacted]

Omni MedSci Ex. 2118
Samsung Electronics Co. Ltd., et al., v. Omni MedSci - IPR2025-01252

[redacted]

(5) [redacted]

380. [redacted]

b) The Specific Technology Shared by Dr. Islam Corresponds Directly to the Patented Features Found in Samsung's Accused Products

381. The presentations and materials shared by Dr. Islam with Samsung did not describe mere general information. The slide decks and materials shared with Samsung specifically identified multiple Omni MedSci patents and pending applications, and described the precise techniques for improving signal-to-noise ratio that are disclosed and claimed in those patents. *See* Ex. 2103; Ex. 2106; *see also* Ex. 2113; Ex. 2114; Ex. 2100 at ¶¶ 12-16.

382. [redacted]

Omni MedSci Ex. 2118
Samsung Electronics Co. Ltd., et al., v. Omni MedSci - IPR2025-01252

[redacted]

- [redacted]

- [redacted].

Omni MedSci Ex. 2118
Samsung Electronics Co. Ltd., et al., v. Omni MedSci - IPR2025-01252

- [redacted] 6.
- [redacted].

I have reviewed the claim chart in Exhibit 2118 and agree with the analysis therein.

383. The presentation materials also explicitly identified Omni MedSci's patents by number, including the related '533 Patent and related patent applications (e.g., U.S. Pat. Pub. Nos. 2017/0071474 and 2016/0327476), and described their coverage of these specific techniques. Ex. 2106 at OMS_SAM0031857-858. Dr. Islam further offered that "we could help Samsung incorporate these techniques with a strong patent protection / barrier to entry for others." Ex. 2100 at ¶ 16; Ex. 2106 at OMS_SAM0031856.

384. Without a license or approval from Omni Med Sci, Samsung took the information it learned from Dr. Islam regarding the technologies disclosed and claimed in the ’455 Patent and implemented those teachings into its own Accused Products. Dr. Islam confirmed that Samsung never ended up collaborating with Omni MedSci. Ex. 2100 at ¶ 18.

385. Samsung’s Accused Products practice the challenged claims of the ’455 Patent by incorporating the same suite of SNR-improvement techniques that Dr. Islam disclosed to Samsung, including: (1) increasing LED light intensity to improve SNR; (2) ambient light cancellation through change detection (differencing signals with LEDs on and off); (3) spatially separated detectors; and (4) synchronization of the detection system with the light source. Ex. 2118.

386. These are not generic or commonplace features. The inventive contribution of the ’455 Patent lies in this coordinated suite of hardware and signal-processing techniques to overcome the challenges of improving the signal-to-noise ratio of physiological measurements obtained from wearable devices during real-world conditions. These techniques address the challenge of accurately measuring physiological parameters using optical wearable devices during physical activity, when numerous factors degrade measurement accuracy.

c) Conclusion

387. The evidence establishes a nexus between Samsung's exposure to Omni MedSci's patented technology and the implementation of those same technologies in Samsung's products. From 2017 through 2023, Dr. Islam shared detailed information with Samsung personnel at multiple levels of the organization, from the President of Samsung SDS, to senior vice presidents at Samsung Electronics, to senior managers and engineers at Samsung subsidiaries, specifically identifying the related '533 Patent and other related patents or patent applications and the techniques they disclosed for improving the signal-to-noise ratio of wearable physiological measurement devices. The copying factor of secondary considerations weighs strongly in favor of the non-obviousness of the challenged claims.

2. Long-Felt but Unsolved Need: Motion Artifacts and Ambient Light Degradation of PPG Signals in Wearable Devices

388. Non-obviousness is further supported by the well documented, long felt need in the wearable health monitoring industry for techniques that would enable accurate photoplethysmographic (PPG) measurement of physiological parameters, such as heart rate, heart rate variability, and blood oxygen saturation, during conditions involving user motion and exposure to ambient light.

389. The prior art and industry evidence demonstrate that, prior to the '455 Patent, the degradation of PPG signal quality caused by motion artifacts and ambient

Omni MedSci Ex. 2118
Samsung Electronics Co. Ltd., et al., v. Omni MedSci - IPR2025-01252

light interference was a persistent, widely recognized problem that the field had been unable to solve by conventional means. Instead, the prevailing approaches required patients to remain still, confined measurements to controlled clinical environments, or relied on filtering and software algorithms that were themselves acknowledged as insufficient.

390. The ’455 Patent addressed this long felt need by disclosing a suite of integrated hardware and signal processing techniques, including ambient light cancellation through change detection schemes, synchronization of LED transmitters and receivers, and dynamic adjustment of LED light intensity, that collectively enabled sufficiently accurate physiological measurements during the daytime and during exercise, conditions under which prior devices had consistently failed.

a) The Recognized Problem: Motion Artifacts Degrade PPG Signal Quality

391. The prior art documents produced by the Petitioners in related district court litigation confirm that motion artifacts were a pervasive and intractable obstacle to accurate PPG-based physiological measurement in wearable devices. For example, U.S. Pat. No. 5,632,272 to Diab et al. and assigned to Masimo Corp. explains the fundamental challenge: “When the patient moves, this causes perturbation such as changing optical pathlength due to movement of background

Omni MedSci Ex. 2118
Samsung Electronics Co. Ltd., et al., v. Omni MedSci - IPR2025-01252

fluids…. Therefore, the measured signal becomes erratic. Erratic motion induced noise typically cannot be predetermined and/or subtracted from the measured signal via traditional filtering techniques." Ex. 2108 at 34:1-7. This candid admission, that motion-induced noise "typically cannot be predetermined and/or subtracted" through traditional filtering, illustrates that the problem was not merely one of optimization but of fundamental technical inadequacy. The prior art filtering approaches simply could not handle the unpredictable, non-periodic nature of motion artifacts in real-world use.

392. U.S. Patent No. 7,738,935 to Turcott and assigned to Pacesetter, Inc. corroborates the severity and pervasiveness of this challenge: "A problem with current methods and devices for performing pulse oximetry is that they are acutely sensitive to sensor and/or tissue motion. Even rather subtle motion can (and often do) swamp the detected optical signals and render the oxygen saturation measurements unusable. For example, with pulse oximetry devices that measure blood volume changes in a fingertip or earlobe, such subtle motion may be caused by a patient's slight movement of their finger or head." Ex. 2109 at 3:24-34. The use of the word "swamp" is telling, indicating that even minor, involuntary movements were sufficient to overwhelm the PPG signal entirely, rendering the resulting measurements not merely degraded but "unusable."

Omni MedSci Ex. 2118
Samsung Electronics Co. Ltd., et al., v. Omni MedSci - IPR2025-01252

b) The Inadequacy of Pre-Existing Solutions and Failure by Others

393. Prior to the techniques disclosed in the ’455 Patent, the industry’s response to the motion artifact problem fell into three general categories, each of which was widely recognized as inadequate for enabling the kind of continuous, real world health monitoring that consumer expect from their modern wearable devices. The failure of others to solve the long-felt problems described above further demonstrates non-obviousness.

394. ***First***, prior attempts at solutions required the patient to remain still. The most common workaround to the problems described above was simply to restrict measurements to periods when the user was immobile. For example, U.S. Pat. No. 6,126,595 to Amano et al. and assigned to Seiko Epson Corp. is unusually explicit on this point, commenting that “when, for example, the test subject is waving his arm, the blood pulse wave cannot be measured. Accordingly, measurements obviously cannot be made during sports activity, while activities such as walking inside a room or outside are also not suitable for measurements.” Ex. 2110 at 61:38-43. The patent goes on to explain that the user was instructed to “sit in the chair… and place the arm with the watch on the desk, taking care not to move his hand.” *Id.* at 61:44-47. This was not a temporary limitation; it was the design specification. If the user was not in “a state of repose,” the device would notify the user via its output

Omni MedSci Ex. 2118
Samsung Electronics Co. Ltd., et al., v. Omni MedSci - IPR2025-01252

and would only proceed with measurements "after confirming that the user is in a suitable state of repose." *Id.* at 68:39-49. The entire measurement paradigm was predicated on the assumption that motion and accurate measurement were fundamentally incompatible.

395. ***Second***, prior attempts at solutions required conducting testing in controlled environments. A closely related approach was to confirm measurements to clinical or controlled settings. Prior to the claimed inventions of the '455 Patent, devices were largely confined to controlled and static environments, like doctor's offices and laboratories. The non-invasive consumer wearable devices providing consumers with 24/7 physiological measurements were simply not available. The experimental protocol explained in the Seiko Epson '595 patent exemplifies this approach, explaining that "13 healthy male subjects, aged 21±9 years, were required to carry out identical activities in the same facility for a 36-hour period spanning 2 days. Ambient temperature was maintained in the range of 24.0° to 24.5° C., with humidity held in the range of 40 to 50%.... The subjects were required to assume a state of repose 15 minutes prior to making any of the measurements. While measurements were being taken, the subjects were required to breath at a regular rate in time with a 0.25 Hz metronome." Ex. 2110 at 16:1-23. The need for such tightly controlled conditions underscores the fragility of PPG-based measurements in real world environments.

Omni MedSci Ex. 2118
Samsung Electronics Co. Ltd., et al., v. Omni MedSci - IPR2025-01252

396. ***Third***, prior attempts at solutions implemented filtering and software algorithm techniques. The use of adaptive filters, Kalman filters, or other software-based motion compensation, was acknowledged as an improvement over mere stillness but was itself recognized as insufficient. U.S. Pat. Pub. No. 2014/0275854 filed by Fitbit, Inc. in 2014 discloses that "the raw heartbeat waveform signal measured by a PPG sensor may be improved by using one or more algorithms to remove motion artifacts… The goal of such algorithms is to remove components of the PPG signal attributable to movement (movement artifacts) using the movement signal captured from the other sensors as a guide." Ex. 2111 at ¶ [0136]. However, these algorithms were explicitly designed only for the case where "the user's motion is periodic," that is, repetitive activities like walking or running, and even then, required multiple passes of adaptive filtering to produce acceptable results. *Id.* at ¶ [0147]. The '272 Patent assigned to Masimo Corp. confirms, "erratic motion induced noise typically cannot be predetermined and/or subtracted from the measured signal via traditional filtering techniques." Ex. 2108 at 34:1-7.

397. The GE Dash 2000 Patient Monitor manual provides a clinical perspective on the same limitations: "Motion artifact occurs with excessive motion of the probe, the cable leading to the probe or the cable/probe junction… The main problem motion artifact can cause is erroneous SPO2 readings. Motion artifact can be reduced, if not eliminated, by selecting a 'quieter' site on the patient." Ex. 2112

Omni MedSci Ex. 2118
Samsung Electronics Co. Ltd., et al., v. Omni MedSci - IPR2025-01252

at DEFS-PA_0007696. The manual's proposed solution, choosing a "quieter" body site or taping cables to the patient's hand is a mechanical workaround, not a technological solution, and it confirms that even in clinical grade devices, the engineering community had not solved the underlying problem.

c) The Ambient Light Problem Compounded the Challenge

398. Ambient light interference posed an additional and compounding obstacle to accurate PPG measurements, particularly during the daytime and outdoor settings where wearable health monitoring is most needed. The '854 application filed by Fitbit in 2014 acknowledges that "[a]mbient light and skin color may make it difficult to extract a user's heart rate from a PPG signal" and describes a technique for reducing the effect of ambient light by "subtracting a value of the received detected light signal when the PPG light source is off from the value of the received detected light signal when the PPG light source is on." Ex. 2111 at ¶ [0194].

399. The combined challenge of ambient light and motion was precisely what the '455 Patent was designed to address. Earlier wearable devices could reliably capture physiological measurements only under ideal conditions, such as during motionless sleep at night, relying on low-power light sources and modest sampling rates. However, obtaining accurate measurements became significantly more difficult during daytime use and periods of physical activity such as exercise,

Omni MedSci Ex. 2118
Samsung Electronics Co. Ltd., et al., v. Omni MedSci - IPR2025-01252

which are precisely the scenarios in which such data is most valuable to the wearer. Exposure to ambient daylight and bodily movement during activities like exercise degraded the accuracy of physiological readings, often pushing them below acceptable accuracy levels.

d) The Academic Literature Confirms the Unresolved Nature of the Problem

400. Academic sources confirm that the motion artifact problem remained unsolved during the relevant time period. A 2012 paper titled "A review of wearable sensors and systems with application in rehabilitation" by Patel et al. identifies motion artifacts in wearable PPG sensors as an open problem: "Although systems of this type have shown promising results, additional work appears to be necessary to achieve motion artifact reduction. Proper attenuation of motion artifacts is essential to the deployment of wearable sensors." Ex. 2115 at OURA_0026873. The authors further observe that "[s]ome of the problems due to motion artifacts could be minimized by integrating sensors into tight fitting garments," but emphasize that "further advances in signal processing techniques to mitigate motion artifacts are needed." *Id.* The use of the phrase "additional work appears to be necessary" and "further advances… are needed" is the language of an unsolved problem existing in 2012 when this paper was published, not one for which the prior art had already provided obvious solutions.

Omni MedSci Ex. 2118
Samsung Electronics Co. Ltd., et al., v. Omni MedSci - IPR2025-01252

e) Conclusion

401. The evidence from the prior art patents, industry documents, and academic literature demonstrates a clear and well documented long felt need for techniques enabling accurate PPG based physiological measurement during motion and under varying ambient light conditions. The pre-existing approaches, requiring the patient to remain still, confining measurements to controlled environments, and applying filtering algorithms, were universally acknowledged as inadequate for the demands of real world wearable health monitoring. Ex. 2100 at ¶¶ 22-29. The '455 Patent discloses an integrated suite of techniques that collectively addressed this long felt need, enabling, for the first time, the sufficiently accurate measurement of heart rate, SpO2, and other physiological parameters during the daytime and during exercise. Ex. 2100 at ¶ 30.

402. For example, the following claimed features address the long-felt needs that others failed to solve:

- "the wearable device configured to increase the signal-to-noise ratio by increasing light intensity of at least one of the semiconductor sources from an initial light intensity" (claims 1, 15);
- "the detection system further configured to generate a first signal responsive to light received while the semiconductor sources are off, generate a second signal responsive to light received while at least one of the semiconductor

Omni MedSci Ex. 2118
Samsung Electronics Co. Ltd., et al., v. Omni MedSci - IPR2025-01252

sources is on; and increase the signal-to noise ratio by comparing the first signal and the second signal" (claims 1, 15)

- "wherein the detection system is configured to be synchronized to the light source" (claim 1);
- "a plurality of detectors that are spatially separated from each other" (claims 1, 15).

Ex. 2100 at ¶ 30.

XI. CONCLUSION

403. In my opinion, the challenged claims of the '455 Patent would not have been obvious to a POSITA as of the priority date of the '455 Patent in view of the asserted references that Petitioners and Dr. Anthony rely upon in Grounds 1-8. Accordingly, it is my opinion that all challenged claims of the '455 Patent are patentable over the asserted references.

404. I reserve the right to modify or supplement my opinions, if necessary, based on further review and analysis of the evidence in this case, including review and analysis of information that may be provided to me subsequent to the date of this declaration.

Omni MedSci Ex. 2118
Samsung Electronics Co. Ltd., et al., v. Omni MedSci - IPR2025-01252

I declare that all statements made herein of my own knowledge are true and all statements made on information and belief are believed to be true, and further that these statements were made with the knowledge that willful false statements and the like so made are punishable by fine or imprisonment, or both, under Section 1001 of Title 18 of the United States Code.

Date: May 7, 2026

Igor Efimov, Ph. D.