Paper No. 1

UNITED STATES PATENT AND TRADEMARK OFFICE

BEFORE THE PATENT TRIAL AND APPEAL BOARD

APPLE INC.,
Petitioner,

v.

OMNI MEDSCI, INC.,
Patent Owner.

Patent No. 10,517,484

Inter Partes Review No. IPR2021-00453

Petition for *Inter Partes* Review of
U.S. Patent No. 10,517,484

Table of Contents

I. Introduction **5**

II. Certifications; Grounds **6**

- **A. Apple May Contest the ’484 Patent (§ 42.104(a))** **6**
- **B. Identification of Claims Being Challenged (§ 42.104(b))** **7**
- **C. Fee for *Inter Partes* Review (§ 42.15(a))** **7**
- **D. Service on Patent Owner (§ 42.105)** **7**

III. Background Technology **8**

- **A. Photoplethysmography** **8**
- **B. Prevailing Industry Trends Before 2012** **10**

IV. The ’484 Patent **14**

- **A. The ’484 Patent Is Subject to AIA** **14**
- **B. Person of Ordinary Skill in the Art** **15**
- **C. File History** **16**
- **D. The Board Should Not Deny Institution under 35 U.S.C. § 325(d) or § 314(a)** **17**

V. Claim Construction **19**

- **A. Lens** **20**
- **B. “Optical Light”** **20**
- **C. “Light Source…”** **20**
- **D. Cloud** **21**

VI. Detailed Explanation Why the ’484 Patent Claims Are Unpatentable **21**

- **A. <u>Ground 1</u>: Lisogurski in View of Carlson Renders Obvious Claims 1, 7, 15, and 17** **21**
  - 1. Overview of Lisogurski 21
  - 2. Overview of Carlson 23
  - 3. A Skilled Person Would Have Modified Lisogurski to Incorporate Elements Shown in Carlson 24

4. Theoretical Distinctions Between Lisogurski and Independent Claims 1, 7, and 15 26

5. Independent Claims 1, 7, 15, and 17 27

a) Preamble 27

b) "a wearable device adapted to be placed on a wrist or an ear of a user" 28

c) "including a light source comprising a plurality of… light emitting diodes [or semiconductor sources], each of the light emitting diodes configured to generate an output [optical] light having one or more optical wavelengths" 28

d) "the wearable device comprising one or more lenses configured to receive a portion [or some] of at least one of the output [optical] lights and to direct [or deliver] a lens output light to tissue" 29

e) "the wearable device further comprising a detection system configured to receive at least a portion of the lens output light reflected from the tissue and to generate an output signal having a signal-to-noise ratio" 33

f) "wherein the detection system is configured to be synchronized to the light source" 34

g) "wherein the detection system comprises a plurality of spatially separated detectors, and wherein at least one analog to digital converter is coupled to at least one of the spatially separated detectors" 38

h) "wherein a detector output from the at least one of the plurality of spatially separated detectors is coupled to an amplifier having a gain configured to improve detection sensitivity" 39

i) "a smart phone or tablet comprising a wireless receiver, a wireless transmitter, a display, a voice input module [or microphone], a speaker, one or more buttons or knobs, a microprocessor and a touch screen, the smart phone or tablet is configured to receive and process at least a portion of the output signal, and wherein at least a

portion of the processed output signal is configured to be transmitted over a wireless transmission link" 40

j) "a cloud configured to receive over the wireless transmission link an output status comprising the at least a portion of the processed output signal, to process the received output status to generate processed data and to store the processed data" 42

k) "wherein the output signal is indicative of one or more of the physiological parameters [, and the cloud is configured to store a history of at least a portion of the one or more physiological parameters over a specified period of time]".....44

l) "the wearable device configured to increase the signal-to-noise ratio".....45

(1) by increasing light intensity of at least one of the [plurality of] semiconductor sources from an initial light intensity" 48

(2) "by increasing a pulse rate of at least one of the plurality of semiconductor sources from an initial pulse rate".....48

m) "the detection system… generate[s] a first signal responsive to light received while the [LEDs] [or semiconductor sources] are off".....54

n) "[the detection system] generate[s] a second signal responsive to light received while at least one of the [LEDs] [or semiconductor sources] is on" 55

o) "[the detection system further configured to] increase the signal-to-noise ratio by differencing the first signal and the second signal".....57

6. Claim 17.....57

B. <u>Ground 2</u>: Claims 1-4, 7-12, and 15-22 are taught by a combination of Lisogurski, Carlson, and Tran 58

1. Overview of Tran.....58

2. A Skilled Person Would Have Modified Lisogurski and Carlson Based on Tran 59

1. Claims 1, 7, 15, and 17 60
2. Claims 2, 10, and 18 61
3. Claims 3, 8, and 16.....62
4. Claim 9.....63
5. Claims 11 and 19.....64
6. Claims 4, 12, 21, and 22 65
7. Claim 20.....65

C. Ground 3: Lisogurski, Carlson, Tran, and Isaacson Render Obvious Claims 5 and 13 66

1. Overview of Isaacson.....66
2. A Skilled Person Would Have Modified the Combined System of Lisogurski, Carlson, and Tran to Incorporate Elements Shown in Isaacson.....68
   a) Claims 5 and 13 70

D. Ground 4: Lisogurski, Carlson, Tran, Isaacson, and Valencell-093 Render Obvious Claims 6, 14, and 23 72

1. Overview of Valencell-093.....72
2. A Skilled Person would combine Lisogurski, Carlson, Tran, Isaacson, and Valencell-093 73
3. Dependents Claims 6, 14, and 23 74

E. No Secondary Considerations Exist 77

VII. Conclusion 77

TABLE OF AUTHORITIES

Page(s)

Cases

Apple Inc. v. Fintiv, Inc.,
IPR2020-00019, Paper 11 (PTAB Mar. 20, 2020) 14

Apple Inc. v. Omni MedSci, Inc.,
IPR2020-00175, Paper 11 (PTAB June 17, 2020) 14

Apple Inc.. v. Omni MedSci, Inc.,
IPR2020-00029, Paper 7 (April 22, 2020) 14

Apple Inc. v. Omni Medsci, Inc.,
IPR2019-00916, Paper 10 (PTAB July 22, 2019) 11

Apple Inc. v. Omni Medsci, Inc.,
IPR2019-00914, Paper 7 (PTAB Aug. 9, 2019) 11

Apple Inc. v. Omni Medsci, Inc.,
IPR2019-00917, Paper 9 (PTAB July 18, 2019) 11

Apple Inc. v. Omni Medsci Inc.,
IPR2019-00916, Paper 23 (PTAB Jan. 31, 2020) 42, 47

Apple Inc. v. Qualcomm Inc.,
IPR2018-01315, Paper 7 (PTAB Jan. 18, 2019) 14

Becton, Dickinson and Co. v. B. Braun Melsungen AG,
IPR2017-01586, Paper 8 (PTAB Dec. 15, 2017) 14

Intex Recreation Corp. v. Team Worldwide Corp.,
IPR2018-00871, Paper 14 (PTAB Sept. 14, 2018) 13

Kennametal, Inc. v. Ingersoll Cutting Tool Co.,
780 F. 3d 1376 (Fed. Cir. 2015) 38

Omni MedSci, Inc. v. Apple Inc.,
Action No. 2-18-cv-00134-RWS (E.D. Tex.) 15

Omni MedSci, Inc. v. Apple Inc.,
Action No. 2-18-cv-00429-RWS (E.D. Tex.) 15

Omni MedSci, Inc. v. Apple Inc.,
Action No. 2-19-cv-05924 (N.D. Cal.) (pending) 15

Omni MedSci, Inc. v. Apple Inc.,
Action No. 2-20-cv-00563-YGR (N.D. Cal.) (pending) 15

In re Petering,
301 F.2d 676 (CCPA 1962) 38

Sinorgchem Co., Shandong v. Int'l Trade Comm'n,
511 F.3d 1132 (Fed. Cir. 2007) 17

Statutes

35 U.S.C. § 315(b) 2

35 U.S.C. § 325(d) 13, 14

Pub. L. No. 112-29, § 3(n)(2), 125 Stat. 293 12

Other Authorities

37 C.F.R. § 1.78(d)(2) 11

37 C.F.R. § 42.15(a) 3

MPEP 2151 11

Exhibit List

Exhibit#	Reference Name
1001	U.S. Patent No. 10,517,484
1002	U.S. Patent No. 10,517,484 File History
1003	Declaration of Brian W. Anthony, PhD
1004	Affidavit of Process Server, *Omni MedSci, Inc. v. Apple Inc.*, No. 3:20-cv-00563-KAW (N.D. Cal.) (DI 16)
1005	U.S. Patent Publication No. 2012/0197093 ("Valencell-093")
1006	RESERVED
1007	U.S. Patent No. 6,505,133 ("Hanna")
1008	U.S. Patent No. 5,746,206 ("Mannheimer")
1009	U.S. Patent Publication No. 2005/0049468 ("Carlson")
1010	U.S. Patent No. 9,596,990 ("Park")
1011	U.S. Patent No. 9,241,676 ("Lisogurski")
1012	RESERVED
1013	RESERVED
1014	RESERVED
1015	U.S. Provisional Application No. 61/747,487
1016	U.S. Provisional Application No. 61/747,472
1017	U.S. Provisional Application No. 61/747,477
1018	U.S. Provisional Application No. 61/754,698
1019	"The Biomedical Engineering Handbook," by Joseph D. Bronzino (1995) ("BE Handbook")
1020	M. Kranz, et al., The mobile fitness coach: Towards individualized skill assessment using personalized mobile devices, Pervasive and Mobile Computing (June 2012)

Exhibit#	Reference Name
1021	Patel, et al., A review of wearable sensors and systems with application rehabilitation, Journal of Neuroengineering & Rehabilitation (2012)
1022	ScienceDirect Report on M. Kranz, et al., The mobile fitness coach: Towards individualized skill assessment using personalized mobile devices, Pervasive and Mobile Computing (2012), available at https://www.sciencedirect.com/science/article/pii/S1574119212000673?via%3Dihub
1023	"The Usage of Tablets in the HealthCare Industry," by Rauf Adil, available at https://www.healthcareitnews.com/blog/usage-tablets-healthcare-industry (Aug. 2, 2012)
1024	A. Omre, Bluetooth Low Energy: Wireless Connectivity for Medical Monitoring, Journal of Diabetes Science & Technology (Mar. 2010)
1025	1. Absorption Coefficient and Penetration Depth, available at https://eng.libretexts.org/Bookshelves/Materials_Science/Supplemental_Modules_(Materials_Science)/The_Science_of_Solar (Accessed October 29, 2018)
1026	Buttussi, Fabio, Chittaro, Luca, MOPET: A context-aware and user-adaptive wearable system for fitness training (2008)
1027	P. Baum, et al., Strategic Intelligence Monitor on Personal Health Systems, Phase 2: Market Developments - Remote Patient Monitoring and Treatment, Telecare, Fitness/Wellnes and mHealth, JRC Scientific and Policy Reports of European Commission (2013)
1028	Compendium of Chemical Terminology Gold Book Version 2.3.3, February 24, 2014
1029	M. Swan, Senior Mania! The Internet of Things, Wearable Computing, Objective Metrics, and the Quantified Self 2.0, Journal of Sensor and Actuator Networks (2012)
1030	Merriam-Webster's Collegiate Dictionary, Eleventh Edition
1031	U.S. Patent Publication No. 2012/0041767 ("Hoffman")
1032	U.S. Patent No. 7,278,966 ("Hjelt")
1033	Lister et al., Optical properties of human skin (Journal of Biomedical Optics 2012)
1034	Bashkatov et al., Optical properties of human skin, subcutaneous and mucous tissues in the wavelength range from 400 to 2000 nm, Journal of Physics D: Applied Physics (2005)

Exhibit#	Reference Name
1035	E.F. Schubert, Light-Emitting Diodes (Cambridge Univ. Press, 2nd ed. reprinted 2014)
1036	Barolet, Daniel, Light-Emitting Diodes (LEDs) in Dermatology (Seminars in Cutaneous Medicine and Surgery 2008)
1037	RESERVED
1038	RESERVED
1039	Excerpts of Omni MedSci Inc.'s Opening Claim Construction Brief, No. 2:18-cv-134-RWS (filed December 20, 2018)
1040	Apple Inc.'s Preliminary Claim Constructions and Extrinsic Evidence Pursuant to Patent Local Rule 4-2, No. 2:18-cv-134-RWS (filed November 1, 2018)
1041	Exhibit E filed Jan. 14, 2019, No. 2:18-cv-134-RWS. The American Heritage Dictionary excerpts, 5th ed. 2012.
1042	Exhibit O filed Jan. 14, 2019, No. 2:18-cv-134-RWS. The American Heritage Dictionary excerpts, 5th ed. 2012.
1043	Amended Joint Claim Construction and Prehearing Statement. Filed January 11, 2019. No. 2:18-cv-134-RWS
1044	Excerpts of Claim Construction Markman Hearing Transcript, February 6, 2019. No. 2:18-cv-134-RWS
1045	Omni Preliminary Proposed Claim Constructions Pursuant to P.R. 4-2. Served on November 1, 2018. Case No. 2:18-cv-134-RWS
1046	Exhibit G filed Jan. 14, 2019. No. 2:18-cv-134-RWS, Merriam-Webster's Collegiate Dictionary excerpts, 11th ed. 2011.
1047	Exhibit N filed Jan. 14, 2019. No. 2:18-cv-134-RWS, Merriam-Webster's Collegiate Dictionary 106, 11th ed. 2011.
1048	RESERVED
1049	RESERVED
1050	RESERVED
1051	RESERVED
1052	RESERVED
1053	Curriculum Vitae of Brian W. Anthony, PhD
1054	Dr. Mohammed Islam, Faculty Profile, University of Michigan, College of Engineering (available at https://islam.engin.umich.edu)

Exhibit#	Reference Name
1055	Technology Transfer Policy, University of Michigan (available at https://techtransfer.umich.edu/for-inventors/policies/technology-transfer-policy/)
1056	Bylaws of the University of Michigan Board of Regents, (available at http://www.regents.umich.edu/bylaws/bylawsrevised_09-18.pdf)
1057	Claim Construction Memorandum Opinion and Order. Case No. 2:18-CV-000429-RWS (August 14, 2019)
1058	Claim Construction Memorandum Opinion and Order. Case No. 2:18-CV-000134-RWS (June 24, 2019)
1059	RESERVED
1060	Remote Deposition of Duncan Leo MacFarlane, Ph.D., P.E., *Apple Inc. v. Omni MedSci, Inc.*, IPR2019-00916 (PTAB April 16, 2020)
1061	RESERVED
1062	Order staying the case, *Omni MedSci, Inc. v. Apple Inc.*, No. 19-cv-05673-YGR (N.D. Cal. Nov. 20, 2019) (DI 219)
1063	U.S. Patent No. 8,725,226 to Isaacson
1064	U.S. Patent No. 8,108,036 to Tran
1065	Order Granting Motion to Stay Pending Interlocutory Appeal Related to Standing Question, *Omni MedSci, Inc. v. Apple Inc.*, No. 20-cv-00563-YGR (N.D. Cal. April 28, 2020) (DI 49)

Petitioner's Mandatory Notices

A. Real Party in Interest (§42.8(b)(1))

The real party in interest of this petition pursuant to § 42.8(b)(1) is Apple Inc. ("Apple") located at One Infinite Loop, Cupertino, CA 95014.

B. Other Proceedings (§42.8(b)(2))

1. Patents and Applications

U.S. Patent No. 10,517,484("'484 patent") is related to following issued patents or pending applications:

- U.S. Patent Application No. 17/078,771
- U.S. Patent Application No. 16/895,727
- U.S. Patent Application No. 16/880,095
- U.S. Patent Application No. 16/669,794
- U.S. Patent No. 10,820,807
- U.S. Patent No. 10,660,526
- U.S. Patent No. 10,667,774
- U.S. Patent Application No. 16/284,514
- U.S. Patent Application No. 16/272,069
- U.S. Patent No. 10,201,283
- U.S. Patent No. 10,136,819
- U.S. Patent No. 9,885,698 (the "'698 patent")

- U.S. Patent No. 9,494,567
- U.S. Patent Application No. 16/004,359
- U.S. Patent No. 9,993,159
- U.S. Patent No. 10,386,230
- U.S. Patent No. 10,126,283
- U.S. Patent No. 9,995,722
- U.S. Patent No. 9,897,584
- U.S. Patent No. 9,797,876
- U.S. Patent No. 9,500,634
- U.S. Patent No. 10,441,176
- U.S. Patent No. 10,172,523
- U.S. Patent No. 10,188,299 (the "'299 patent")
- U.S. Patent No. 9,651,533 (the "'533 patent")
- U.S. Patent No. 9,164,032
- U.S. Patent No. 10,213,113 (the "'113 patent")
- U.S. Patent No. 10,098,546 (the "'546 patent")
- U.S. Patent No. 9,861,286 (the "'286 patent")
- U.S. Patent No. 9,757,040 (the "'040 patent")
- U.S. Patent No. 9,500,635

2. **Related Litigation**

The ’484 patent has been asserted in the following litigations:

- *Omni MedSci, Inc. v. Apple Inc.*, Action No. 2-20-cv-00563-YGR (N.D. Cal.) (pending); and

The ’533 patent, ’040 patent, ’286 patent, ’698 patent, ’546 patent, ’299 patent, and ’113 patent have been asserted in the following litigations:

- *Omni MedSci, Inc. v. Apple Inc.*, Action No. 2-18-cv-00429-RWS (E.D. Tex.) (terminated).
- *Omni MedSci, Inc. v. Apple Inc.*, Action No. 2-19-cv-05924 (N.D. Cal.) (pending); and
- *Omni MedSci, Inc. v. Apple Inc.*, Action No. 2-18-cv-00134-RWS (E.D. Tex.) (terminated).

3. **Patent Office Proceedings**

The ’484 patent is not subject to any other proceedings before the Office. The ’484 patent’s parents have been subject to multiple IPR proceedings:

- The ’533 patent is subject to IPR2019-00913 (terminated) and IPR2019-00916 (Final Written Decision, all challenged claims unpatentable) (Paper No. 39, (“’533 FWD”)), both filed by Apple.
- The ’040 patent is subject to IPR2019-00910 (terminated) and IPR2019-00917 (terminated via settlement), both filed by Apple;

- The ’286 patent is subject to IPR2019-00911 (terminated) and IPR2019-00914 (terminated via settlement), both filed by Apple;
- The ’698 patent is subject to IPR2019-00912 (terminated) and IPR2019-00915 (terminated via settlement), both filed by Apple;
- The ’546 patent is subject to IPR2020-00029 (terminated via settlement);
- The ’299 patent is subject to IPR2020-00175 (pending); and
- The ’113 patent is subject to IPR2020-00209 (terminated via settlement).

C. **Lead and Backup Lead Counsel (§42.8(b)(3))**

Lead Counsel is: Jeffrey P. Kushan (Reg. No. 43,401), jkushan@sidley.com, (202) 736-8914. Back-Up Counsel are: Ching-Lee Fukuda (Reg. No. 44,334), clfukuda@sidley.com, (212) 839-7364; Thomas A. Broughan III (Reg. No. 66,001), tbroughan@sidley.com, (202) 736-8314; and Sharon Lee (*pro hac vice* to be submitted), sharon.lee@sidley.com, (212) 839-7305.

D. **Service Information (§42.8(b)(4))**

Service on Petitioner may be made by e-mail (iprnotices@sidley.com), mail or hand delivery to: Sidley Austin LLP, 1501 K Street, N.W., Washington, D.C. 20005. The fax number for lead and backup lead counsel is (202) 736-8711.

I. Introduction

Health monitoring systems based on optical sensors, which measure physiological parameters of a user based on how light interacts with the user's tissue and blood, have been ubiquitous for decades. Once found only in hospitals and doctor's offices, these systems are now mainstream consumer devices. Over time, they evolved to become smaller, digital, wireless, and Internet-connected, an evolution driven by several market trends and forces.

The claims of the '484 patent contested in this petition define a device that represents nothing more than an entirely predictable combination of well-known components that have been used together in analogous prior art devices for the same purpose. More directly, the claims define a device for measuring one or more physiological parameters that is comprised of conventional and common components including multiple light emitting diodes (LEDs), lenses for directing the light to the skin, a receiver, and standard signal processing techniques. In the claimed devices, those components are used for their known and established purposes, and in a way that is precisely analogous to how they are used in prior art devices described in Lisogurski and Carlson, as well Tran, Isaacson, and Park. As explained below, the claimed devices would have been obvious over this prior art.

The contested independent claims are also highly similar to claims in related patents that the Board has found unpatentable. For example, the Board found

claims of the ’533 patent—a parent of the ’484 patent—to be unpatentable based on Lisogurski and Carlson[1] in a final written decision in IPR2019-00916. The ’484 patent claims overlap substantially with the ’533 patent, and the distinctions between the independent claims of these two related patents are inconsequential to obviousness.

The Board should institute trial and find all challenged claims unpatentable.

II. Certifications; Grounds

A. Apple May Contest the ’484 Patent (§ 42.104(a))

Apple certifies that the ’484 patent is available for *inter partes* review (IPR). Apple also certifies it is not barred or estopped from requesting IPR of the claims of the ’484 patent. Neither Apple, nor any party in privity with Apple, has filed a civil action challenging the validity of any claim of the ’484 patent. The ’484 patent has not been the subject of a prior IPR by Apple or a privy of Apple.

Apple also certifies this IPR petition is timely filed as this petition was filed less than one year after January 29, 2020, the date Apple was first served with an amended complaint alleging infringement of a claim of the ’484 patent. *See* 35 U.S.C. § 315(b); Ex.1004.

---

[1] Several dependent claims were rejected based on a further combination with the Mannheimer reference. ’533 FWD at 47-50.

B. Identification of Claims Being Challenged (§ 42.104(b))

Claims 1-23 are unpatentable based on the following prior art and grounds.

Challenged Claims	Basis	References
1, 7, 15, and 17	§103	Lisogurski and Carlson
1-4, 7-12, and 15-22	§103	Lisogurski, Carlson, and Tran
5 and 13	§103	Lisogurski, Carlson, Tran, and Isaacson
6, 14, and 23	§103	Lisogurski, Carlson, Tran, and Valencell-093, with or without Isaacson

Petitioner notes that in proceedings involving related patents, Patent Owner has not disputed that Lisogurski is prior art. The remaining references were published prior to the publication date of Lisogurski.

C. Fee for *Inter Partes* Review (§ 42.15(a))

The Director is authorized to charge the fee specified by 37 C.F.R. § 42.15(a) to Deposit Account No. 50-1597.

D. Service on Patent Owner (§ 42.105)

Omni MedSci, Inc. is identified as the patent owner of record in the assignment records for the ’484 patent. The named inventor of the ’484 Patent, Dr. Islam, has been a member of the faculty of the University of Michigan since 1992. Ex.1054. Based on the University of Michigan Bylaw 3.10 and Technology Transfer Policy, the University of Michigan is the owner of the ’484 patent. Ex.1055; Ex.1056 at 21-22. Dr. Islam has also purported to assign the patent to

OmniMedSci. *Id*. Petitioner has thus served this petition on both the University of Michigan and Omni MedSci.

III. Background Technology

A. Photoplethysmography

Optical health monitors use a sensing technique called photoplethysmography ("PPG") that has been known and used for decades in medical monitoring systems. Ex.1003, ¶37; Ex.1019, 769-76, 1346-55. PPG works by shining light through a person's tissue and measuring the light that is either reflected back or transmitted through the tissue. Ex.1019, 766. Different components of blood and tissue absorb and reflect different wavelengths of light. Ex.1003, ¶38. By measuring how much light is absorbed and its changes over time, a device can calculate the components of the blood and tissue. Ex.1003, ¶38.

For example, hemoglobin (the substance in blood that carries oxygen to cells) reflects more red light when it is oxygenated and absorbs more red light when it is deoxygenated. Ex.1019, 769; *see* Ex.1003, ¶39. Hemoglobin, however, reflects the same amount of infrared (IR) light whether oxygenated or deoxygenated. Ex.1019, 769. If a device measures the absorbed red and IR light multiple times per second, the device can determine: (i) the ratio of oxygenated to deoxygenated hemoglobin (oxygen saturation), and (ii) how the volume of blood in

the tissue changes over time, allowing detection of a person's pulse. Ex.1019, 769, 771; Ex.1003, ¶39.

PPG is an optical technique that uses conventional optical components. Ex.1003, ¶40. The 1995 BE Handbook explains that the "basic building blocks" of optical sensor systems include lenses, mirrors, filters, beam splitters, light sources, fiber optics, and detectors. Ex.1019, 765. As illustrated in the figure below, light is directed through a lens and onto a sample. *Id.* The light reflects back from the sample, is filtered, and sensed by a photodetector. *Id.*; Ex.1003, ¶¶41-43. The photodetector outputs a signal proportionate to the measured light intensity, and then analog-to-digital conversion and signal processing are performed to extract data. Ex.1019, 766. The device can use various signal processing techniques to improve the signal-to-noise ratio. *See* Ex.1019, 764, 766, 846-47; Ex.1003, ¶¶44-46.

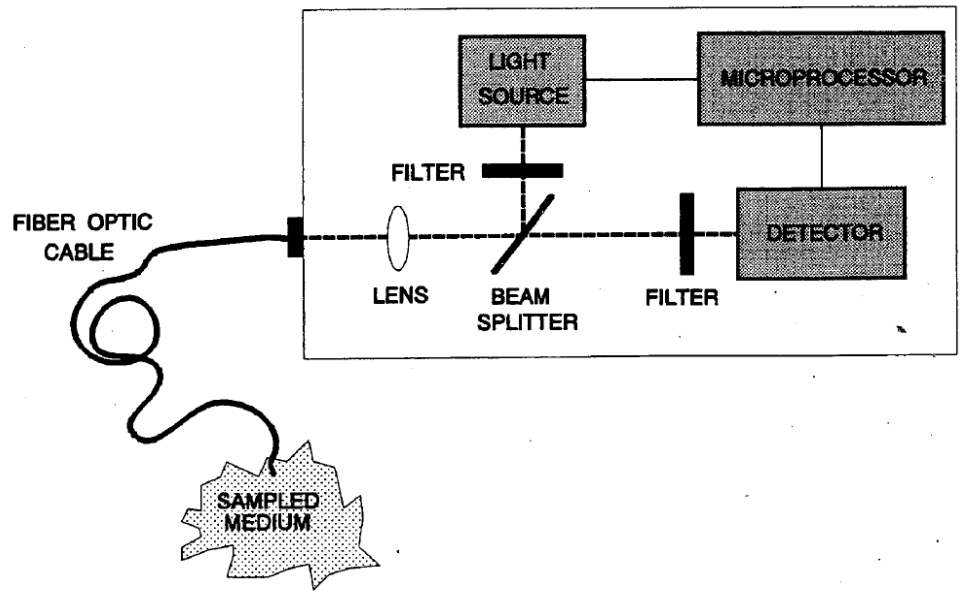

FIGURE 52.1 General diagram representing the basic building blocks of an optical instrument for optical sensor applications.

Portable devices conventionally use light emitting diodes (LEDs) as the light source because LEDs are small and have low power requirements. Ex.1019, 765; Ex.1003, ¶42.

B. Prevailing Industry Trends Before 2012

From 2000 to 2012, several market trends and needs drove the medical device industry to develop wearable, mobile sensor devices that could wirelessly communicate user data to remote devices. Ex.1003, ¶48.

One trend responded to the challenge of providing medical care for patients in their homes or in locations where there was not easy access to a physician. This drove development of wireless monitoring technologies that could be worn by the

patient and used to transmit data to a remote physician or care provider. Ex.1021, 2; Ex.1024, 462; Ex.1027, 15-31; *see* Ex.1003, ¶¶48, 50-52.

Another trend was to bring heart rate sensing devices based on pulsoximetry to the consumer market for personal fitness tracking and other uses. Ex.1003, ¶¶49-50. As a June 2012 review observed:

> A multitude of commercial health devices and sensors, such as oximeters and heart rate monitors, formerly reserved for professional use, are now available and can be connected to smartphones. GPS watches, pedometers and heart rate monitors…

Ex.1020, 3; *see also* Ex.1009, [0004]; Ex.1029, 221; Ex.1005, [0003] ("There is growing market demand for personal health… monitors…for gauging overall health, fitness, metabolism, and vital status during exercise…"); Ex.1027, 33, 35.

A third trend sought to take advantage of the miniaturization of electronics and communication technology, which led to the development of smaller, wearable monitoring systems for mobile health and fitness applications. Ex.1021, 3; Ex.1022, 1; *see* Ex.1003, ¶¶51-52.

A fourth trend in the medical industry was to use apps and smartphones to not only deliver care to patients but to give individuals access to health data for fitness or health issues. This drove integration of miniaturized, network-connected monitoring devices with smartphones and similar devices. Ex.1027, 9-10, 40-49; Ex.1023, 1-2 ("Doctors and nurses were the early adopters of tablets"); Ex.1021, 4;

see Ex.1023, 5 (One of "the biggest usage of tablets stems from… [p]atient monitoring and data collection…"); Ex.1027, 41; *see* Ex.1003, ¶¶52-54. It also led to the prevalent use of cloud-based data transfer and storage of data. Ex.1003, ¶¶55-56.

These market trends provided a strong motivation to skilled persons to integrate medical optical sensing techniques into miniaturized wearable consumer devices that communicate wirelessly with smart devices and remote services. Ex.1003, ¶¶51-52. They also led to a proliferation of products using a distributed architecture supporting personal health, sports, and mobile monitoring systems. Ex.1003, ¶52.

One example of this architecture was described in Patel 2012:

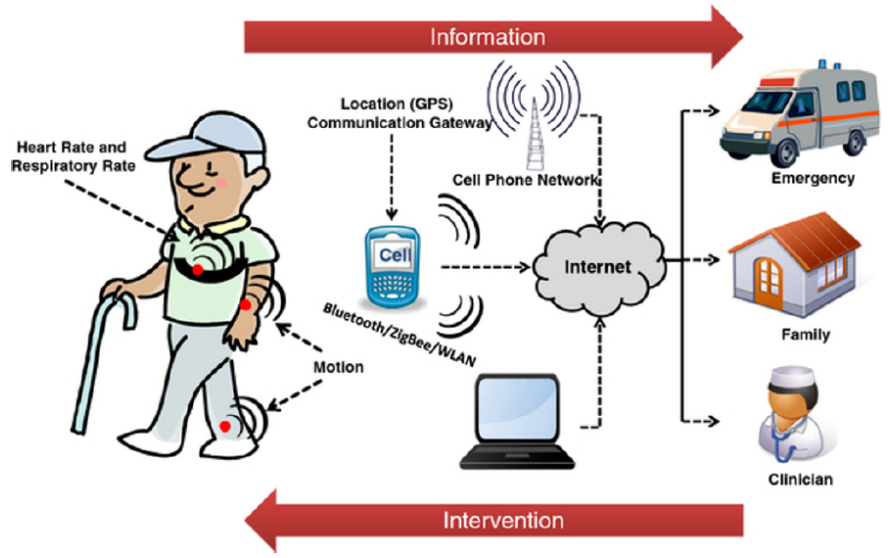

Figure 1 Illustration of a remote health monitoring system based on wearable sensors. Health related information is gathered via body-worn wireless sensors and transmitted to the caregiver via an information gateway such as a mobile phone. Caregivers can use this information to implement interventions as needed.

Ex.1021, 2. As illustrated above, data from wearable sensors are transmitted to a cellphone, which then transmits the data and GPS information to remote devices used by a clinician, family, or an emergency responder. The data are also transmitted to and stored in the cloud. Ex.1021, 2, 4.

A 2010 publication described a similar architecture in which "medical data can be sent from a wireless monitor to a cell phone or PC and from there to a remote physician." Ex.1024, 459-60; Ex.1003, ¶54.

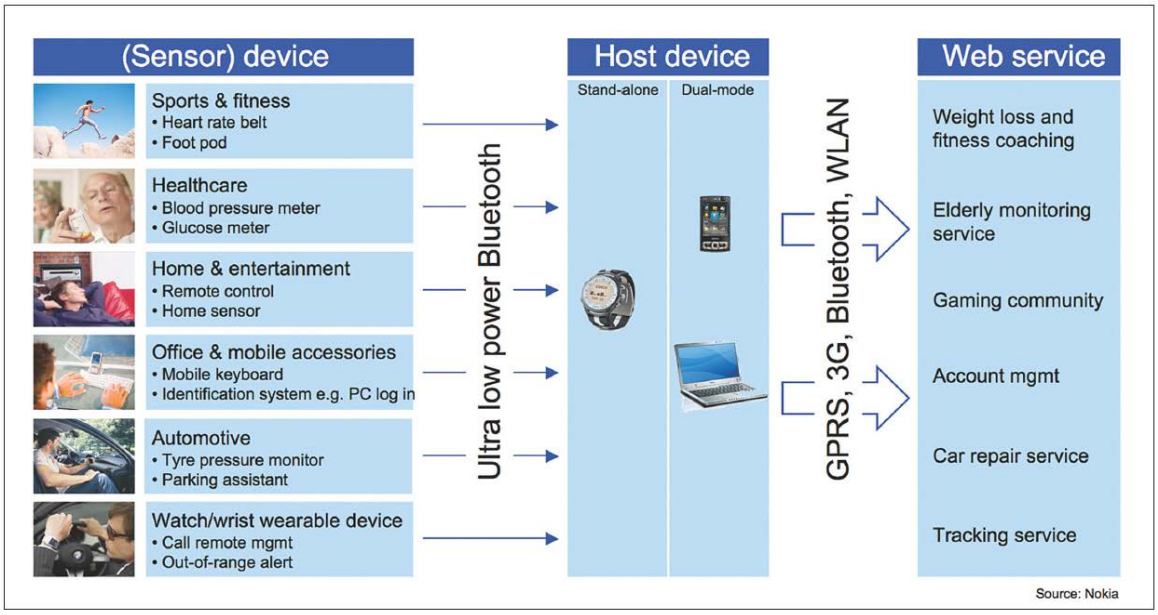

Figure 2. Bluetooth low energy will extend interoperable wireless connectivity to coin-cell-powered wireless sensors in health care, fitness, and related sectors. WLAN, wireless local area network; GPRS, general packet radio service.

Other contemporaneous articles similarly envisioned use of "cloud"-based services to support this interconnected scheme. Ex.1003, ¶¶55-56. A 2012 article illustrated a fitness app using a cloud-based architecture implemented below:

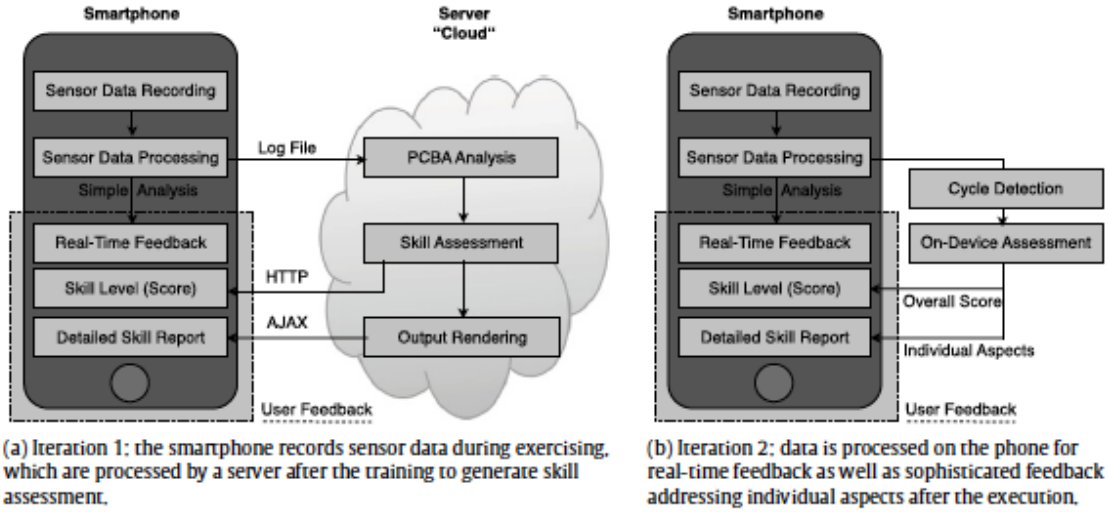

(a) Iteration 1: the smartphone records sensor data during exercising, which are processed by a server after the training to generate skill assessment.

(b) Iteration 2: data is processed on the phone for real-time feedback as well as sophisticated feedback addressing individual aspects after the execution.

Fig. 3. Iterations of the GymSkill application.

Ex.1020, 7. In this example, a smartphone records and processes sensor data, sends the data to a cloud server for further processing, and then the cloud server returns processed data back to the smartphone for display. Ex.1020, 6-7, 12. This article specifically recognized this cloud-based system could be used with heart rate monitors and optical sensors.

IV. The ’484 Patent

A. The ’484 Patent Is Subject to AIA

The ’484 patent issued from U.S. Application No. 16/506,885 (filed July 9, 2019) and claims priority to numerous provisional and non-provisional

applications.[2] *See* Ex.1001, 1:8-2:10. Omni has not disputed that many of these intervening family members are subject to the AIA, including the ’533, ’286, and ’040 patents. *See e.g.*, *Apple Inc. v. Omni Medsci, Inc.*, IPR2019-00916, Paper no. 10 at 15-16, IPR2019-00914, Paper No. 7 at 14-15, IPR2019-00917, Paper no. 9 at 14-15. Because the ’484 patent claims, like those of these intervening family members, recite elements not supported by the disclosures of the pre-AIA priority applications, they are not entitled to an effective filing date before December 17, 2013 and are subject to AIA. MPEP 2151; Public Law 112-29, § 3(n)(2), 125 Stat. at 293 (same). Consistent with this, the Examiner found the ’484 patent to be subject to AIA, Ex.1002, 634, and Omni never argued it should not be, Ex.1002, 1211. Regardless, all of the asserted references are prior art even if the ’484 patent were given priority to the earliest provisional date.

B. Person of Ordinary Skill in the Art

A person of ordinary skill in the art (“skilled person”) would have a good working knowledge of optical sensing techniques and their applications, and familiarity with optical system design and signal processing techniques. That

---

[2] The ’484 patent violates 37 C.F.R. § 1.78(d)(2) by claiming priority to multiple patents that previously had no parent-child relationship with each other, and by not specifying the relationship between them.

knowledge would have been gained via an undergraduate education in engineering (electrical, mechanical, biomedical or optical) or a related field of study, along with relevant experience studying or developing physiological monitoring devices (e.g., non-invasive optical biosensors) in industry or academia. Ex.1003, ¶35. This description is approximate; varying combinations of education and practical experience also would be sufficient. *Id.*

Apple's positions regarding how a skilled person would have understood the '484 patent claims and the prior art are supported by the testimony of Brian Anthony, Ph. D., an expert in optical sensing devices with over 20 years of experience. *Id*., ¶¶1-9, 36.

C. File History

The examination record shows that the Examiner allowed the claims without imposing any rejection. Ex.1002, 634-635. Omni filed claims (Ex.1002, 363-369) along with multiple Information Disclosure Statements identifying prior art identified in concurrent litigation, which the Examiner initialed. Omni then amended those claims (Ex.1002, 607-613), which the examiner allowed without mentioning Lisogurski or Carlson (Ex.1002, 634-635). Omni again amended the claims (Ex.1002, 1203-1209), which the Examiner entered without comment (Ex.1002, 1215).

D. The Board Should Not Deny Institution under 35 U.S.C. § 325(d) or § 314(a)

Although some of the references relied upon in this petition were listed in an IDS, the Board should not deny institution under § 325(d) as the record shows those references received only a cursory consideration. Notably, the examiner did not mention those references in the notice of allowability. Absent mention of those references demonstrates that the Examiner performed, at best, a cursory review of those references. The Examiner's initialing of the IDS forms, and his entry of additional after-allowance amendments to the claims with no explanation whatsoever after those references were cited also shows the references were given at best a cursory and incomplete consideration. *Intex Recreation Corp. v. Team Worldwide Corp.*, IPR2018-00871, Paper 14, at 13 (PTAB Sept. 14, 2018) (references initialed in an IDS, but not discussed or used as basis for rejections, received only "[c]ursory consideration... [that] weighs against exercising discretion to deny under § 325(d)" (citation omitted)); *see Apple Inc. v. Qualcomm Inc.*, IPR2018-01315, Paper 7, at 22-26 (Jan. 18, 2019).

The Examiner made a material error in not rejecting the claims over the Lisogurski and Carlson references, which the Board has found to render obvious the closely related claims of the '533 Patent—the parent of the '484 Patent—in a Final Written Decision. *See Becton, Dickinson and Co. v. B. Braun Melsungen AG*, IPR2017-01586, Paper 8 at 17 (Dec. 15, 2017); *see also Apple Corp. v. Omni*

MedSci, Inc., IPR2020-00175, Paper 11 at 13 (June 17, 2020), IPR2020-00029, Paper 7 at 55 (April 22, 2020). The Board's determination shows that Lisogurski and Carlson are, at a minimum, clearly material to the patentability of the '484 Patent claims, and it was improper for the Examiner to allow the claims without rejection after those references had been cited. Again, the record shows these references, at best, received a cursory review that did not enable the Examiner to appreciate their significance.

The Board also should not deny institution under § 314(a). *See Apple Inc. v. Fintiv, Inc.*, IPR2020-00019, Paper 11 (Mar. 20, 2020). The parallel district court litigation was stayed shortly after it was filed pending outcome of an interlocutory appeal regarding Omni's standing to assert the patents. Ex.1065. No discovery has taken place, there has been no exchange of infringement or invalidity contentions, and there is no case schedule or trial date. *Id*. If the Federal Circuit finds that Omni has standing,[3] and the case is remanded to the district court, the district court is likely to stay the case pending the outcome of any IPRs, including IPR2020-00175 and the appeal of IPR2019-00916. The district court has stayed the other two cases filed by Omni pending the outcome of Apple's IPRs on the

[3] Briefing at the Federal Circuit is complete. Oral argument likely will be scheduled in early to mid-2021, and a decision issued in late 2021.

asserted patents in those cases, and thus, it is likely to do the same for this case. Ex.1062.

And, as noted, the Board has already found the similar claims of the parent ’533 patent unpatentable based on some of the same references asserted here, showing that this IPR has strong merits. *See* ’533 FWD.

V. Claim Construction

The parties have disputed several claim terms in district court litigation involving related patents. The parties offered alternative constructions for these terms, Ex.1043, and the Court provided a final construction of each disputed term. Ex.1058; Ex.1057. For consistency, the PTAB should apply the district court’s constructions of these terms.[4] In addition, the Board considered many of these terms in IPR2019-00916, and found it unnecessary to construe several of them. Apple also offers constructions for certain additional claim terms, but recognizes the Board may not need to construe these terms to find the contested claims unpatentable.

---

[4] The prior art renders the claims unpatentable even under Apple’s proposed district court constructions that were not adopted.

A. Lens

The district court construed a similar term ("*a plurality of lenses*") to have its plain and ordinary meaning. That meaning encompasses the only type of lens described by the '484 patent, which is one that is transparent and will "collimate or focus the light." Ex.1001, 8:61-63; 9:58-60; 24:8-9; 24:40-42; 26:59-63. This is consistent with dictionary definitions. Ex.1046, 712; *see* Ex.1041, 481. Thus, the plain and ordinary meaning of "*lens*" encompasses Apple's proposed district court construction of one or more transparent surfaces used to collimate (make parallel) or focus rays of light. Because the prior art shows lens that meet Apple's proposed construction, the Board need not address this dispute.

B. "Optical Light"

The claim term "*optical light*" is expressly defined in the specification: "As used throughout this disclosure, the terms 'optical light' and or 'optical beam…' refer to photons or light transmitted to a particular location in space." Ex.1001, 10:66-11:1. This definition should be adopted verbatim as the patentee's chosen lexicography. *Sinorgchem Co., Shandong v. Int'l Trade Comm'n*, 511 F.3d 1132, 1136 (Fed. Cir. 2007). Therefore, "*optical light*" should be construed to mean "photons or light transmitted to a particular location in space."

C. "Light Source…"

In IPR2019-00916, the Board construed the term "*a light source comprising a plurality of semiconductor sources that are [LEDs]… configured to increase*

signal-to-noise ratio by… increasing a pulse rate of at least one of the plurality of semiconductor sources" to mean "a light source containing two or more light emitting diodes (semiconductor sources), wherein at least one of the light emitting diodes is capable of having its pulse rate increased to increase a signal-to-noise ratio." '533 FWD at 10-12. Claims 1 and 7 of the '484 patent contain a similar limitation. Petitioner does not believe this term requires construction because the prior art teaches it even under the construction Omni proffered in IPR2019-00916. However, Petitioner also supports use of the Board's prior construction.

D. Cloud

Claims 1, 7, and 15 recite the term "*cloud*." The '484 patent does not define "cloud." The term cloud should have its plain and ordinary meaning, which is a remote device (or network of devices) hosted on a network and used to store, manage, or process data. Ex.1003, ¶65.

VI. Detailed Explanation Why the '484 Patent Claims Are Unpatentable

A. <u>Ground 1</u>: Lisogurski in View of Carlson Renders Obvious Claims 1, 7, 15, and 17

1. Overview of Lisogurski

Lisogurski describes a portable physiological monitoring system that uses a wearable optical sensor to measure a person's pulse rate and oxygen saturation (*e.g.*, a pulse oximetry system). Ex.1011, 3:66-4:8. The system includes a sensor, a monitor, and remote devices such as servers. Ex.1011, 11:28-32, 15:43-48;

Ex.1003, ¶71. The sensor can be worn in various locations, such as on a wrist, Ex.1011, 4:6-8, 4:15-20, is battery powered, and can wirelessly communicate with the monitor, Ex.1011, 17:55-58; Ex.1003, ¶72. The sensor can include several light emitting diodes (LEDs) and photodetectors. Ex.1011, 17:37-45, 10:48-64, 11:9-13.

The system regulates a light drive signal, which is the electric current applied to the LEDs. Ex.1011, 11:38-41, 11:50-54, 12:3-9; Ex.1003, ¶74. For a particular LED, the emitted light intensity increases as a higher current is applied. Ex.1011, 12:3-9, 12:16-22, 7:13-16, 7:24-31. Lisogurski teaches that the LEDs can be modulated. Ex.1011, 4:48-54, 8:4-8, 8:27-35, 16:25-32. Depending on various conditions, the device can change the modulation parameters and the light drive cycle. Ex.1011, 1:60-61, 1:67-2:3; Ex.1003, ¶78. The drive cycle parameters that can be controlled include "light intensity, duty cycle, [and] light source firing rate." Ex.1011, 1:60-61, 1:67-2:3; *see id.*, 1:19-21, 5:48-54, 25:53-55. Lisogurski explains that varying the drive cycle parameters can increase the signal-to-noise ratio of the device when interference is encountered. Ex.1011, 5:55-6:6, 9:46-52, 27:44-49; Ex.1003, ¶¶74, 76-77.

The LEDs emit modulated light that is passed into a person's tissue, and a photodetector detects the light reflected back. Ex.1011, 4:7-11, 10:48-56, 11:13-20; Ex.1003, ¶75. The detector "convert[s] the intensity of the received light into

an electrical signal." Ex.1011, 11:14-16. The sensor can send the detected signal directly to the monitor or it can pre-process the signal first. Ex.1011, 11:20-27. Lisogurski shows that the sensor can connect to the monitor with a wired or a "wireless[]" connection. Ex.1011, 17:54-59, Fig. 3. Either way, the device applies signal processing techniques to the detected signal to isolate the signal from the reflected light. Ex.1011, 7:16-21, 12:48-49; *see generally id.*, 13:7-14:55 (describing various signal processing).

2. Overview of Carlson

Carlson describes a wearable pulse oximeter that can be worn on the ear, finger, or "other parts of the human body." Ex.1009, [0052], [0078]; Ex.1003, ¶79. The device uses a conventional sensor that emits optical wavelengths in the red (*e.g.*, 660 nm) and infrared (*e.g.*, 800 to 1000 nm) ranges, and it detects light that has been transmitted or reflected. Ex.1009, [0003], [0050], [0052].

Carlson's objective is to "increas[e] the technical performance of pulsoximetry in terms of quality and robustness of the measurement signal versus environmental disturbances and energy consumption." Ex.1009, [0002]; *see* Ex.1003, ¶77. Carlson notes that previous known sensors "suffer from signal instability and insufficient robustness versus environmental disturbances." Ex.1009, [0004]. Carlson therefore has the objective "to define optical and/or electronic means for increasing the Signal-to-Noise ratio (S/N)… of a pulsoximeter

sensor for robust application of pulsoximetry… in rough (optical) environmental conditions, e.g. at changing light influences, such as sunlight, shadow, artificial light, etc." Ex.1009, [0010]. These observations in Carlson provide a direct motivation to a skilled person to incorporate its techniques, features and other improvements into other pulsoximetry devices. Ex.1003, ¶80.

3. A Skilled Person Would Have Modified Lisogurski to Incorporate Elements Shown in Carlson

A skilled person would have considered the systems described in Lisogurski in conjunction with those described in Carlson, as both concern analogous miniaturized wireless puloximetry devices having the same applications (*e.g.*, mobile monitoring of pulse and other physiological characteristics of a person). Ex.1003, ¶85.

Lisogurski describes a PPG system that is designed to optimize power consumption. Ex.1011, 1:4-6, 3:50-53. Its system allows "for increased battery life" and "or increased portability." Ex.1011, 1:16-18. As an example, Lisogurski explains that its techniques could improve oximeters by reducing power requirements, allowing for smaller devices or longer life. Ex.1011, 4:63-67. Lisogurski describes these improvements in a system that includes a wearable sensor, *e.g.*, one worn on a wrist. Ex.1011, 4:15-20, 17:51-58. Lisogurski teaches several techniques for increasing the signal-to-noise ratio of measured signals while minimizing power consumption. Ex.1011, 9:46-52. As Dr. Anthony

explains, these teachings would have motivated a skilled person to look for other techniques for achieving the same objectives, particularly those used with wearable sensors. Ex.1003, ¶83. A skilled person would do that as part of the ordinary design process he or she follows to improve the operation of a device; they naturally would look to complementary designs and techniques in analogous systems. Ex.1003, ¶83.

That would have led the skilled person to Carlson, which describes techniques for improving pulse oximetry devices (used for hospital or mobile patients or for portable sports applications) by improving both signal measurement and energy consumption. Ex.1009, [0002], [0004]; Ex.1003, ¶84. Carlson teaches techniques and structures for increasing the signal-to-noise ratio of the optical sensing performed by such devices, even where optical conditions of the environment are changing. Ex.1009, [0010]. Carlson indicates its techniques are energy efficient and can be used in battery-powered devices, such as those worn on an earlobe or finger. Ex.1009, [0048], [0052].

Lisogurski and Carlson thus describe analogous systems with common applications and utility; both describe techniques for improving the power consumption of portable and wearable optical sensing devices while improving their performance and utility. Ex.1003, ¶85. The skilled person would have

considered the references together when implementing a system based on Lisogurski's teachings. Ex.1003, ¶85.

Moreover, as explained in §III.B, above, by 2012, there was a general trend in the industry to create wearable devices that can be used in mobile monitoring situations or for sports and personal fitness applications. Ex.1003, ¶¶48-56, 86. Thus, the skilled person considering Lisogurski would have had reason to look to references describing techniques for creating or improving wearable devices for these mobile health and consumer applications, such as Carlson. Ex.1003, ¶86.

The skilled person also would have been motivated to include specific features from Carlson in Lisogurski's system, for the reasons set forth below. *See* '533 FWD at 24.

4. Theoretical Distinctions Between Lisogurski and Independent Claims 1, 7, and 15

As explained below, Lisogurski describes systems having all, or nearly all, of the elements of the claimed systems. Patent Owner may contend certain distinctions exist between those claims and Lisogurski. For independent claims 1, 7, and 15 (from which all the other claims depend), these theoretical distinctions include whether Lisogurski discloses:

- a "*smart phone or tablet*";
- a "*lens*";

- increasing the signal-to-noise ratio by "*increasing a pulse rate*" of an LED;
- that its sensor alone includes every component of the measurement device in the claims (*e.g.*, that the claims require the LEDs and the circuitry that controls them to be physically integrated into a single component).

Each supposed distinction would be inconsequential to patentability, as a skilled person would have considered each to have been an obvious variation of Lisogurski.

5. Independent Claims 1, 7, 15, and 17

a) Preamble

The claims' preamble[5] specify "*[a] system for measuring one or more physiological parameters and for use with a smart phone or tablet*." To the extent the preamble is limiting, Lisogurski teaches it. Lisogurski describes "an optical physiological monitoring system" (including a sensor and a monitor) that "may be used to determine physiological parameters such as blood oxygen saturation, hemoglobin…, [and] pulse rate" ("*measure[es] one or more physiological*

[5] Claims 1, 7, and 15 contain overlapping limitations with identical or similar language. Apple will note any difference at the start of each limitation.

parameters"). Ex.1011, 1:10-25; *id.*, 3:43-46; *see also id.*, 3:61-4:5, 4:22-25, 15:30-35; Ex.1003, ¶¶89-92; *See* '533 FWD at 25.

Lisogurski also teaches, or at least suggests, that its system can be used with a smartphone or tablet, as explained below with respect to the "*smart phone or tablet…*" limitation. *See* §VI.A.5.i), below.

b) "a wearable device adapted to be placed on a wrist or an ear of a user"

Lisogurski teaches that its sensor may be worn on various parts of a person's body, including "the ***wrist*** to monitor radial artery pulsatile flow… and around or in front of the ***ear***" ("*placed on a wrist or an ear of a user*"). Ex.1011, 4:6-20; Ex.1003, ¶97.

c) "including a light source comprising a plurality of… light emitting diodes [or semiconductor sources], each of the light emitting diodes configured to generate an output [optical] light having one or more optical wavelengths"

Lisogurski describes a wearable sensor that can include a light source comprising multiple LEDs ("*a plurality of… light emitting diodes…*" or "*semiconductor sources*"). Ex.1011, 17:42-45 ("sensor unit 312 may include multiple light sources"), 10:48-49, 10:58-64 ("light source 130 may include any number of light sources"); Figs. 1, 3; Ex.1003, ¶¶99-100. The light source may include any number of LEDs, such as multiple infrared ("IR") LEDs and multiple

red LEDs. Ex.1011, 7:58-8:3, 10:58-63, 17:37-45, 19:25-31; Ex.1003, ¶¶100; *see* ’533 FWD at 25.

Lisogurski explains the LEDs are “configured to emit photonic signals having one or more wavelengths of light (e.g., Red and IR) into a subject’s tissue” (“*an output* [*optical*] *light having one or more optical wavelengths*”). *Id*., 10:49-52; *see id.*, 4:42-45; Ex.1003, ¶101; *see* ’533 FWD at 25. The LEDs are configured to direct the light “into a subject’s tissue,” (Ex.1011, 10:49-52), and thus, they create light “transmitted to a particular location in space” as required by the term “*optical light*.” Ex.1003, ¶101.

d) “the wearable device comprising one or more lenses configured to receive a portion [or some] of at least one of the output [optical] lights and to direct [or deliver] a lens output light to tissue”

Lisogurski teaches use of conventional red and infrared LEDs to emit light. Ex.1011, 10:53-56, 7:38-8:3, 19:25-31. A skilled person would have known that a conventional LED is comprised of a light emitting semiconductor that creates light, and that the semiconductor typically is encapsulated in glass or another medium. Ex.1003, ¶104. That person would have known that the encapsulant in an LED can be used to protect the semiconductor, but is also commonly shaped as a lens to focus the light emitted by the LED. Ex.1003, ¶104. The skilled person also would have known there were three types of LEDs: (i) LEDs with no encapsulant, (ii)

LEDs with an optically inert encapsulant, and (iii) LEDs with an encapsulant that acts as a lens. Ex.1003, ¶105; Ex.1035, 97-98, 191-99, 266-67.

A skilled person would have known that in LEDs of the last type, the encapsulant helps direct more of the light produced by the LED outward toward the tissue (and thus "transmit[] [the light] to a particular location in space"), thereby increasing its efficiency, and that was known to be of benefit for LEDs to be used in mobile, battery-powered devices. Ex.1003, ¶106. The skilled person thus would have found it obvious to select an LED that uses an encapsulant that functions as a lens for use in mobile devices, given these benefits. Ex.1003, ¶¶105-106, 109. When configured in this manner, each of Lisogurski's LEDs would emit a portion ("*some*") of an "*output [optical] light*," which would be captured and focused by that LED's encapsulant lens, and then emitted as the "*lens output light*" toward a subject's tissue. Ex.1003, ¶107.

Lisogurski thus describes "*one or more lenses configured to receive a portion of at least one of the output [optical] lights and to deliver a lens output light to tissue*." *See* '533 FWD at 35-36.

As noted above (§VI.A.4), Patent Owner may contend that Lisogurski does not disclose "*one or more lenses*." Even if that distinction were accepted, the skilled person would have found it obvious to include a lens in Lisogurski's device

based on that person's knowledge as well as Carlson. Ex.1003, ¶¶110-112; *see* '533 FWD at 36-37.

A skilled person considering Lisogurski would have known that a lens is a "basic building block[]" of an optical sensor (Ex.1019, 765) and that lenses commonly were part of such sensors. Ex.1003, ¶¶108-109. That person would have found it obvious to include a separate lens for each LED in Lisogurski's sensor, given that lenses were a standard component of such sensors. *Id.* Thus, to the extent Lisogurski's LEDs do not suggest the use of lenses, including a lens for each LED would have been obvious based on a skilled person's knowledge. Ex.1003, ¶109.

Carlson independently identifies the benefits of using lenses within portable optical sensing devices. Ex.1003, ¶¶111. Carlson teaches use of a plurality of lenses, (Ex.1009, [0013] ("at least one beam shaping optical element")), and that they can be "diffractive or refractive lenses" that "direct the emitted optical radiation… into the human or animal tissue…." Ex.1009, [0013], [0014], [0024], [0062]. A "refractive lens" focuses rays of light, and thus, it meets Apple's district court construction of "*lens*." Ex.1003, ¶111. Figure 4 of Carlson shows two lenses 21 that receive light beams 8 emitted by LEDs 15 ("*a portion of at least one*" [or "*some*"] "*of the output optical lights*") and deliver light bundles or beams 12 to

sample 2 ("*direct*" or "*deliver*" "*a lens output light to tissue*"). Ex.1009, [0054], [0062].

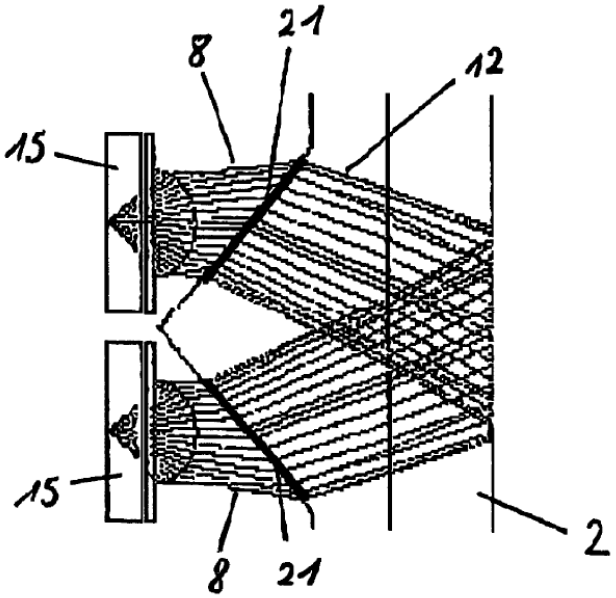

Figure 4

Ex.1009, Fig.4; *id.*, [0054] ("in Fig. 4…, the two initial light beams 8 are guided in the form of bundled beams 12"). Thus, as the figure shows, the light within each beam is "transmitted to a particular location in space" and meets the construction of "*optical light*." Ex.1003, ¶¶111.

A skilled person would have considered it obvious to include a plurality of lenses in Lisogurski's sensor for the reason Carlson identifies—to focus the light emitted by each of the LEDs onto a person's skin. Ex.1003, ¶112. Carlson identifies a benefit of doing so: that lenses "increase the optical signal power…, thus increasing the Signal/Noise … ratio" without increasing the actual power used by the system. Ex.1009, [0014]; *id.*, [0010].

The skilled person also would have been motivated to include lenses in Lisogurski. Ex.1003, ¶¶113-114. One of the objectives Lisogurski identifies is to improve the power efficiency of devices, including via techniques that improve the signal-to-noise ratio of the measured optical signal. Ex.1011, 6:3-6, 9:49-60, 13:60-14:10, 14:40-55, 37:6-20; Ex.1003, ¶¶82, 112. The skilled person would have recognized that adding lenses to Lisogurski would achieve that objective as they improve signal measurement efficiency and complement Lisogurski's operation. Ex.1003, ¶¶112-113. The skilled person also would have known that lenses are a "basic building block[]" of optical sensors, (Ex.1019, 765) and would have been able to integrate them into Lisogurski with routine effort, (Ex.1003, ¶108). A skilled person thus would consider the addition of lenses to Lisogurski to be a predictable arrangement of known elements, with each performing the same function it was known to perform and yielding what one would expect from the arrangement. Ex.1003, ¶113.

e) "the wearable device further comprising a detection system configured to receive at least a portion of the lens output light reflected from the tissue and to generate an output signal having a signal-to-noise ratio"

Lisogurski includes a sensor with one or more detectors that are connected to front-end processing circuitry (together, "*a detection system*"), which "may receive a detection signal from detector 140 and provide one or more processed signals to back end processing circuitry 170." Ex.1011, 12:42-45. The detector(s)

receives "the light that is reflected by or has traveled through the subject's tissue" ("*receive[s]… at least a portion of the lens output light*"). Ex.1011, 17:40-42; *see also id.*, 11:9-10; Fig. 1 (140); Fig. 3 (318). The detector "convert[s] the intensity of the received light into an electrical signal," and thus, "*generate[s] an output signal*." Ex.1011, 11:14-17; 11:20-25; Fig. 1 (102); Fig. 3 (312); Ex.1003, ¶¶116. Lisogurski also teaches that "[a]fter converting the received light to an electrical signal, detector 140 may send the detection signal to monitor 104" (Ex.1011, 11:20-22) and that the sensor may further process the electrical signal before transmitting the detection signal to the monitor (Ex.1011, 11:25-27).

Lisogurski further discloses that the "detection signals" have "*a signal to noise ratio*," and the "processed signals" originate from those "detection signals." Ex.1003, ¶117; Ex.1011, 14:49-50 (discussing "the signal-to-noise ratio of the detection signal"); *see also* Ex.1011, 9:46-52 (noting the detected signal may include "background noise" and that the light drive parameters of the LEDs may be modified to "improve ***the signal-to-noise ratio***"), 11:20-27.

f) "wherein the detection system is configured to be synchronized to the light source"

Lisogurski teaches synchronizing its front-end processing circuitry with the light drive circuitry that controls the pulsing of the LEDs. Ex.1011, 11:41-46 ("front end processing circuitry 150 may… operate ***synchronously*** with light drive circuitry 120. For example, front end processing circuitry 150 may ***synchronize*** the

operation of an analog-to-digital converter and a demultiplexer with the light drive signal based on the timing control signals.”). Thus, the front-end processing circuitry and the detector(s) (together being a “*detection system*”) are “*synchronized*” to the light drive signal (“*the light source*”). Ex.1003, ¶¶119-120.

Lisogurksi also describes embodiments where the firing rate of an LED is correlated to the sampling rate of an analog-to-digital converter. Ex.1011, 33:47-49 (“sampling rate modulation may be correlated with light drive signal modulation”); *see also id.*, 2:1-2, 27:44-52 (LED firing rate can be modulated), 35:25-31. Lisogurski teaches an embodiment where the measurements taken by the receiver have a one-to-one correlation, with one sample taken per period. Ex.1011, 35:17-19.[6] A skilled person would have understood that in this embodiment, the LEDs and the receiver are synchronized. Ex.1003, ¶¶120-121. This is another way in which Lisogurski teaches that the front-end processing circuitry and the detector(s) (together being a “*detection system*”) are “*synchronized*” to the light drive signal (“*the light source*”). Ex.1003, ¶¶120-121.

---

[6] Lisogurski discloses different embodiments where there is not a one-to-one correlation, and instead multiple samples are taken per on period and then averaged. Ex.1011, 35:19-23.

Lisogurski's use of timing signals to synchronize the operation of the light source and the detection circuitry, is consistent with embodiments in '484 specification. Ex.1003, ¶122; Ex.1001, 16:67-17:2. Lisogurski thus describes "*a detection system*" that receives and processes the reflected light, and that is "*synchronized*" to the "*the light source*". *See* '533 FWD at 39.

As noted above (§VI.A.4), Patent Owner may argue that Lisogurski does not teach this element because the front-end processing circuitry is depicted in monitor 104 which is separate from wearable sensor 102 that contains the detector. To the extent that distinction is accepted, incorporating the front-end processing circuitry and detector in the same device would have been obvious. Ex.1003, ¶¶123-127. The relevant circuitry is depicted in the annotated figure below.

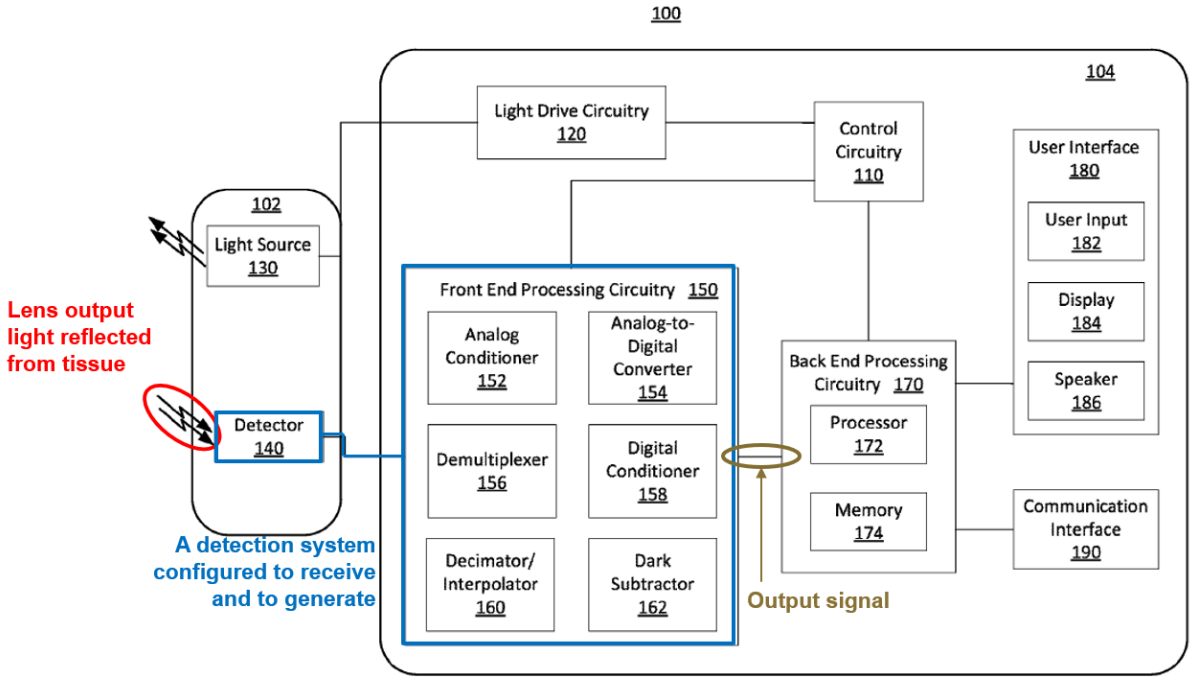

FIG. 1

Ex.1003, ¶119.

Lisogurski teaches that the sensor can "preprocess" the electrical signal before transmitting the signal to the monitor. Ex.1011, 11:20-27. It also explains that the sensor may be a separate, battery-powered device that is wirelessly connected to the monitor. Ex.1011, 17:55-59, 18:23-25; *see also id.*, 18:16-31, 17:32-35. Though not depicted in Lisogurski's figures, the skilled person would have considered it obvious to configure the sensor to include the front-end processing circuitry based on the functional relationship between these elements. Ex.1003, ¶124.

As Dr. Anthony explains, the skilled person would have found this configuration obvious so that the sensor could process the detected signal and wirelessly transmit it to the monitor. Ex.1003, ¶125. That person would have understood that the analog signal output from the detector would need to be converted to digital form for wireless transmission. *Id.* Thus, that person would have found it obvious to include the front-end processing circuitry, which performs analog-to-digital conversion and other processing of the signal, in the sensor where the signal is captured. *Id.* The necessary circuitry is small and power efficient, and can easily be integrated into the wearable sensor without negatively affecting the device's operation. *Id.* This is also consistent with the indication in Lisogurski that "[i]n some embodiments the functionality of some of the components may be

combined in a single component… [or] the functionality of some of the components of monitor 104… may be divided over multiple components." Ex.1011, 16:2-9; Ex.1003, ¶126.

Finally, a skilled person would have found a motivation to combine these elements into the sensor component based on general trends in the industry in 2012 (*see* §III.B above), which would encourage inclusion of additional features into wearable devices to improve their operation in mobile monitoring systems or for sports and personal fitness applications. Ex.1003, ¶127.

g) "wherein the detection system comprises a plurality of spatially separated detectors, and wherein at least one analog to digital converter is coupled to at least one of the spatially separated detectors"

As explained above (§VI.A.5.f)), the detectors and front-end processing circuitry together are the "*detection system*." Lisogurski's sensor includes "[o]ne or more detector 318… for detecting the light that is reflected by… the subject's tissue." Ex.1011, 17:40-42; *see also id.*, 11:9-10; Figs. 1 (140), 3 (318). The sensor "may include multiple… detectors, which may be spaced apart." Ex.1011, 17:43-45. Thus, Lisogurski teaches "*a plurality of spatially separated detectors*." Ex.1003, ¶129.

The electrical signals generated by the detectors are received by the front-end processing circuitry, and are passed between the components of the circuitry. Ex.1011, 13:6-60. The front-end processing circuitry includes an analog-to-digital

converter, as shown in annotated Figure 1 below. Ex.1011, 13:21-27, 13:27-30; Ex.1003, ¶¶130-131.

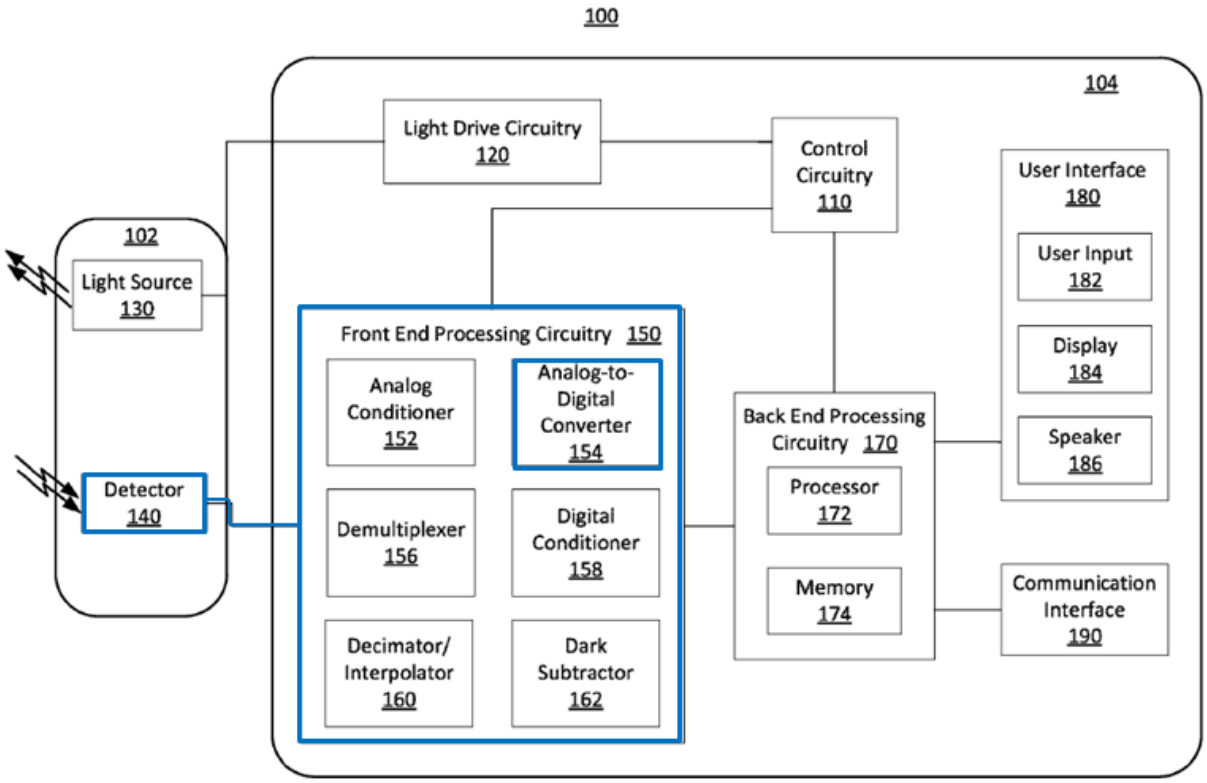

FIG. 1

Ex.1003, ¶131; Ex.1011, Fig. 1, 13:7-12.

h) "wherein a detector output from the at least one of the plurality of spatially separated detectors is coupled to an amplifier having a gain configured to improve detection sensitivity"

Lisogurski teaches this limitation, which appears in claim 1 but not claims 7 and 15. Lisogurksi discloses that "the system may amplify the received signal using the front end processor circuitry," Ex.1011, 19:52-53, and that "[t]he gain of the amplifier may be adjusted," Ex.1011, 19:56-58. Accordingly, Lisogurski's

front-end processing circuit comprises "*an amplifier having a gain*." *See id.*, 19:52-53, 26:38-45; Ex.1003, ¶133. Lisogurksi also explains that the "gain of the amplifier may be adjusted… so that the amplified signal matches the range of the analog-to-digital converter and thus increases resolution." Ex.1011, 26:44-45; *see id*., 26:38-44. A skilled person would have recognized that increased resolution allows smaller changes to be detected, which "*improves detection sensitivity*." Ex.1003, ¶¶134-135.

i) "a smart phone or tablet comprising a wireless receiver, a wireless transmitter, a display, a voice input module [or microphone], a speaker, one or more buttons or knobs, a microprocessor and a touch screen, the smart phone or tablet is configured to receive and process at least a portion of the output signal, and wherein at least a portion of the processed output signal is configured to be transmitted over a wireless transmission link"

Lisogurski explains that its sensor is designed to be used with a monitor, which can be a portable, battery-powered computing system that includes a touchscreen. Ex.1011, 1:16-18 (portable), 15:20-23 (touch screen), 18:65-66 (battery powered); *see* Ex.1003, ¶137. Lisogurski's back-end processing circuitry includes a processor (a "*microprocessor*"), *see* Ex.1011, Fig. 1, 172, 14:56-66, and is coupled to the user interface, which may include "any type of user input device such as… ***a touch screen***, ***buttons***, switches, ***a microphone***…, or any other suitable input device." Ex.1011, 15:20-237, Fig. 1. The user interface also includes a ***display*** and a ***speaker***. Ex.1011, 15:19-20, Fig 1. The back-end

processing circuitry is connected to a communication interface that "may include one or more ***receivers*** [or] ***transmitters***" each of which "may be configured to allow… ***wireless*** communication." Ex.1011, 15:49-56; Ex.1003, ¶138.

Thus, Lisogurski's monitor includes "*a wireless receiver, a wireless transmitter, a display, a voice input module* [or "*microphone*"], *a speaker, one or more buttons or knobs, a microprocessor and a touch screen*." *See* '533 FWD at 39-43.

Lisogurski describes the monitor as a computing device that can be portable, battery-powered, and have a touchscreen. A skilled person reading Lisogurski's description of the monitor would have recognized that there were a finite number of options for what that device could be. That person would have immediately envisioned that that a tablet computer (a portable, battery-powered device with a touchscreen where the device typically is flat) was such a device, as was a smartphone. Ex.1003, ¶137; *see Kennametal, Inc. v. Ingersoll Cutting Tool Co.*, 780 F. 3d 1376, 1381 (Fed. Cir. 2015) (a reference can anticipate a claim even if it "d[oes] not expressly spell out" all the limitations arranged or combined as in the claim, if a person of skill in the art, reading the reference, would "at once envisage" the claimed arrangement or combination); *see In re Petering*, 301 F.2d 676 (CCPA 1962). As explained in §III.B, above, it was well-known in 2012 that tablets and smartphones could be used in mobile sensor systems, and there was a

general trend in the industry to develop such devices. Thus, a skilled person would have considered Lisogurski to disclose, or at least to render obvious, implementing Lisogurski's monitor as a tablet or smartphone. Ex.1003, ¶137.

The back-end processing circuitry in the Lisogurski monitor includes a processor that receives and processes the output signal from the front-end processing circuitry ("*configured to receive and process at least a portion of the output signal*"). Ex.1011, 14:60-64. "For example, processor 172 may determine one or more physiological parameters based on the received physiological signals." Ex.1011, 14:62-64; Ex.1003, ¶139. The calculated physiological parameters also can be wirelessly transmitted to other devices, Ex.1011, 15:43-48, 15:53-57, 18:49-53, 18:58-65, including a server or website, Ex.1011, 20:55-60, 26:55-60, and another monitor, Ex.1011, 18:58-65. Thus, Lisogurski discloses that "*at least a portion of the processed output signal is configured to be transmitted over a wireless transmission link*." Ex.1003, ¶¶140-142.

j) "a cloud configured to receive over the wireless transmission link an output status comprising the at least a portion of the processed output signal, to process the received output status to generate processed data and to store the processed data"

Lisogurski teaches that the determined physiological parameters and other data ("*an output status comprising at least the processed output signal*") may be wirelessly transmitted "to a server or a website" or to another monitor such as a

multi-parameter physiological monitor 326 (MPPM 326) (each a "*cloud*" device). Ex.1011, 26:55-60 (publish to server or website), 18:11-15, 18:58-62 (monitor can send data to another monitor); *id.*, 15:43-48 (data can be wirelessly sent to "electronic circuitry, a device, a network, a server or other workstations"), 15:55-57 (describing wireless transmission); Ex.1003, ¶144. Lisogurski explains MPPM 326 is a remote device that is wirelessly coupled to and receives an output signal from monitor 104/314 (*e.g.*, a tablet computer) and that can be "coupled to a network to enable the sharing of information with servers or other workstations," which shows it can be part of a cloud-based server. Ex.1011, 15:43-48, 18:49-65, Fig. 3.

Lisogurski indicates that when the data is transmitted to a server, website, another monitor, or other cloud device, it may be further processed and stored. For example, to "publish" data to a server or website, the server or website would need to process the data and then store it. Ex.1011, 26:55-60; Ex.1003, ¶145. Lisogurski also explains that "processing equipment remote to the system may be used to determine physiological parameters." Ex.1011, 26:51-55. Where the cloud device is another monitor, it can be MPPM 326 "configured to calculate physiological parameters and to provide a display 328 for information." Ex.1011, 18:49-53. A skilled person would have understood that these devices generate and store processed data in order to perform these functions. Ex.1003, ¶¶146-147.

k) "wherein the output signal is indicative of one or more of the physiological parameters [, and the cloud is configured to store a history of at least a portion of the one or more physiological parameters over a specified period of time[7]]"

Lisogurski explains that the data ("*output signal*") transmitted to a server, another monitor, or other remote device may be stored or "published." Ex.1011, 26:55-60; Ex.1003, ¶149. It also explains that the other monitor can be MPPM 326 "configured to calculate physiological parameters...." Ex.1011, 18:49-53. Lisogurski teaches that the data stored and shared by these devices include historical data, indicating, *inter alia*, that the described system can perform "historical analysis of prior cardiac cycles." Ex.1011, 20:8-9, 19:1-19. "For example…, [s]tatistical information… may also be calculated… for the historical information." Ex.1011, 20:9-13; *see id.*, 20:53-55 (calculations done remotely); Ex.1003, ¶150.

A skilled person would have understood that to calculate historical information, the system must store historical physiological data ("*history of at least a portion of the one or more of the physiological parameters*") over a specified period of time (*e.g.*, a certain number of cardiac cycles or a certain period of time). Ex.1003, ¶¶150-152. A skilled person would therefore understand that the remote

[7] Bracketed language appears in claim 1 only.

device stores a history of the data and can perform the described historical analysis. Ex.1003, ¶¶150, 153-154.

l) "the wearable device configured to increase the signal-to-noise ratio"

Lisogurski teaches that the light source is in the wearable sensor 102. Ex.1011, 10:48-49. It teaches altering the LED light drive parameters in response to "the level of noise, ambient light, [or] other suitable reasons" to mitigate their effects and increase SNR. Ex.1011, 9:46-60; *id.*, 5:55-6:6 (discussing modulation techniques), 1:67-2:3, 14:49-55, 35:5-9; Ex.1003, ¶¶156-157.

Lisogurski describes several modulation techniques that can increase signal-to-noise ratio. *Apple Inc. v. Omni Medsci Inc.*, IPR2019-00916, Paper 23 at 15 (Omni admitting "Lisogurski teaches three different techniques for improving SNR"). One of these is cardiac cycle modulation. *Id.*; Ex.1011, 25:49-55; 31:11-24, 31:39-55. Lisogurski explains that signal modulation techniques are controlled by control circuitry and light drive circuitry, which generate a light drive signal for activating the light sources. Ex.1011, 1:44-46, 11:38-41, 11:50-54. This can vary the light drive signal parameters, "includ[ing] light intensity, firing rate, [and] duty cycle." Ex.1011, 1:19-21. These parameters correspond to brightness (light intensity), frequency (firing rate), and pulse width which is the duration of each pulse of light (duty cycle). Ex.1003, ¶158.

Lisogurski thus teaches that "*the wearable device [is] configured to increase signal-to-noise ratio*" by varying light drive parameters of the LEDs in response to noise. Ex.1003, ¶¶156-158.

As noted above (§VI.A.4), Patent Owner may contend that Lisogurski does not teach this element because the control and light drive circuitry that controls the LEDs is depicted in monitor 104, which is separate from the wearable sensor 102 that contains the LEDs. To the extent this distinguishes Lisogurski from the claims, configuring Lisogurski to include all these components in the sensor would have been obvious. Ex.1003, ¶¶159-161.

Lisogurski teaches the control circuitry directs the light drive circuitry to generate the light drive signal, which is the electric current provided to the LEDs that turns them on and determines their brightness. Ex.1011, 11:38-41, 11:50-54, 25:52-55; Ex.1003, ¶162. Because these circuits work together to output the electric current that is applied to the LEDs, the skilled person would have understood that this circuitry would need to be in the same device as the LEDs (the sensor), or at least that it was obvious to include the circuitry there. Ex.1003, ¶162; Ex.1011, 11:38-41, 11:50-54, 25:52-55. A wired configuration of these elements is presented in Figure 1 of Lisogurski (annotations added).

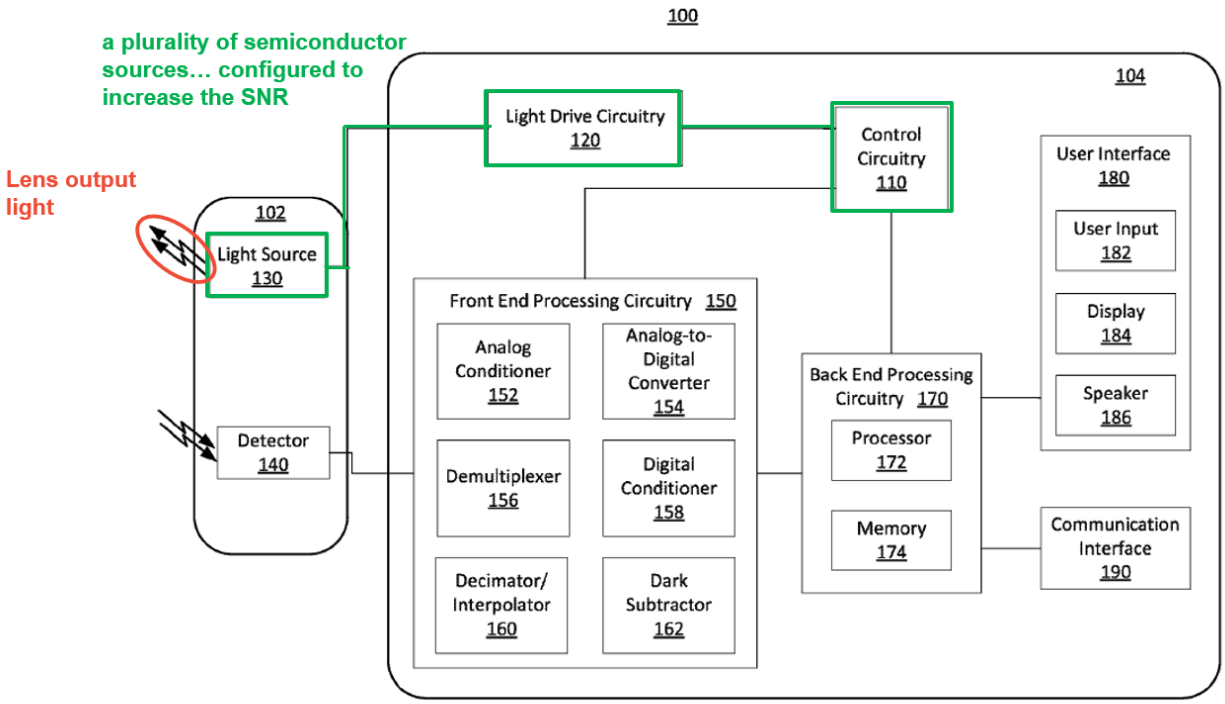

FIG. 1

Ex.1003, ¶139.

Lisogurski also teaches a wireless embodiment, where the sensor containing the LEDs is separate from the monitor. Ex.1011, 17:55-59, 18:23-25; *see also id.*, 18:16-31, 17:32-35; Ex.1003, ¶¶161-62. In this embodiment, the light drive and control circuitry would be in the wireless sensor so current could be applied to the LEDs. Ex.1003, ¶¶161-62. Lisogurski also expressly teaches that elements of its system can be kept distinct or combined into one component. Ex.1011, 16:2-9. The skilled person would have recognized this guidance would apply to the LEDs, the light drive and control circuitry, as those elements work together. Ex.1003, ¶162. That person would have found it obvious to include the light drive and control circuitry in Lisogurski's sensor because the necessary circuitry is small and

power efficient and can easily be integrated into the wearable sensor without negatively affecting the device's operation. Ex.1003, ¶163. General trends in the industry in 2012 would have motivated the skilled person to use this configuration, including those favoring integration of multiple features and capabilities into wearable devices to improve mobile monitoring systems and sports/fitness applications. Ex.1003, ¶¶163-64.

(1) by increasing light intensity of at least one of the [plurality of] semiconductor sources from an initial light intensity"

Lisogurski explains that the sensor may receive "an increased level of background noise in the signal due to patient motion. The system may ***increase the brightness of the light sources*** in response to the noise ***to improve the signal-to-noise ratio***." Ex.1011, 9:46-52; *see id.*, 37:6-22, 6:3-6; Ex.1003, ¶¶145-48. Ex.1003, ¶144. Light intensity is "brightness" squared, and thus by increasing brightness, Lisogurski teaches "*increasing light intensity from an initial light intensity*." Ex.1003, ¶¶166-71; *see* '533 FWD at 26.

(2) "by increasing a pulse rate of at least one of the plurality of semiconductor sources from an initial pulse rate"

Lisogurski explains that its system can dynamically adjust the parameters of light emitted by the LEDs to ensure an adequate signal-to-noise ratio. Ex.1011, 9:46-52; *id.*, 37:6-22. These parameters include "drive current or light brightness,

duty cycle, [and] ***firing rate***" among others. Ex.1011, 27:44-52; *id.*, 2:1-2 ("light source firing rate"), 8:29-35, 25:46-55; Ex.1003, ¶175. A skilled person would have understood that an LED's "firing rate" is the same as the claimed "pulse rate." Ex.1003, ¶¶175-176. Lisogurski teaches using a first modulation mode, and when it "detect[s] a change in background noise [or].. ambient light," it changes to a second modulation mode that uses different light drive parameters (*e.g.*, cardiac cycle modulation parameters). Ex.1011, 37:6-20. A skilled person would have recognized that a light source must originally have an initial firing rate ("*initial pulse rate*") that the system can later change. Ex.1003, ¶176.

Lisogurksi teaches this feature by describing embodiments where the firing rate of an LED is correlated to the sampling rate of an analog-to-digital converter in the detector. Ex.1011, 33:47-49 ("sampling rate modulation may be correlated with light drive signal modulation"); *see also*, *id.*, 11:43-46; 11:52-55. Lisogurski explains "decreasing the duration of the 'off' periods (i.e., ***increasing the emitter firing rate***) relates to an increased sampling rate." Ex.1011, 35:27-31. A skilled person would have understood that an increased sampling rate results in more samples. Ex.1003, ¶¶178-180. Such a person would have recognized that signal to noise improves because the noise is spread across more samples. Ex.1003, ¶180. This is why Lisogurski explains that increasing the sampling rate "may result in more accurate and reliable physiological information." Ex.1011, 33:56-58;

Ex.1003, ¶180; *see* Ex.1011, 9:46-52 (varying parameters can increase SNR), 35:7-9. Omni's expert in a related proceeding admitted this scientific truth:

> Q…Why is it that changing the pulse rate of an LED would change the signal-to-noise ratio?
> A. There are a number of reasons…why that might happen. Generally speaking, ***the faster the modulation, the faster the pulse rate, the lower the background noise***.
> ***That's… a general statement of -- of truth***. There are… counterexamples, but generally speaking, as… you have a faster or an increased pulse rate, you see a lower noise environment.

Ex.1060, 37:13-38:3 (emphasis added); *see id.*, 82:5-15. Lisogurski therefore teaches that as both the firing and sampling rate increases, the "*signal to noise ratio*" also "*increases*." Ex.1003, ¶180.

Lisogurski's "cardiac cycle modulation" also satisfies this limitation, and Omni has admitted that Lisogurki's "cardiac cycle modulation" is a technique for "improving SNR." *Apple Inc. v. Omni Medsci Inc.*, IPR2019-00916, Paper 23 at 15; '533 FWD at 28; '533 FWD (J. Horvath, concurring) at 2-3. Lisogurski's "cardiac cycle modulation" varies light drive signal parameters, such as firing rate, to remain "substantially synchronous[] with" a subject's heart rate." Ex.1011, 25:46-55, *see id.*, 25:50-61. A skilled person would have recognized that this means, for example, that the firing rate will increase whenever a subject's heart rate increases. Ex.1003, ¶¶181-182. This increase in the firing rate can increase

SNR because noise is reduced 1%-4%. Ex.1011, 42:50-54; *see also id.*, 25:66-26:14 (modulating LED drive signal to correlate to respiratory cycle can increase SNR); *see* '533 FWD at 29.

Thus, Lisogurski discloses multiple ways that that the system can increase the LED firing rate ("*pulse rate*") to increase signal-to-noise ratio. Ex.1003, ¶156. The Board made this same finding in IPR2019-00916. *See* '533 FWD at 29-30.

Patent Owner may contend that Lisogurski does not explicitly teach that increasing an LED pulse rate increases the signal-to-noise ratio.

Initially, Lisogurski clearly identifies the importance of increasing the signal-to-noise ratio in its scheme. Ex.1011, 9:50-52 ("The system may… improve the signal-to-noise ratio."); Ex.1003, ¶185. It also explains that one reason to do this is to offset the effect of "noise, patient motion, or ambient light." *Id.*, 9:57-60; '533 FWD at 33. This is consistent with the knowledge of the skilled person, who would have understood that measurement quality ultimately derives from the quality of the signal being analyzed, and that noise such as ambient light diminishes that signal quality. Ex.1003, ¶185. That person thus would have been motivated to consider additional ways of improving the signal-to-noise ratio when considering implementing Lisogurski. Ex.1003, ¶185.

Carlson teaches one such way of improving signal-to-noise ratios, including to deal with the same problems of ambient light identified in Lisogurski. Ex.1003,

¶¶186-187. As it explains, pulsing the LEDs at an increased rate to reduces the effects of ambient light including sunlight whenever present. Ex.1009, [0067]-[0069]. Carlson teaches that the pulse frequency ("*pulse rate*") is "chosen in such a way that it is outside the frequency spectrum of sunlight and of ambient light" and it could be "1000 Hz" or "can be chosen at any other frequency, as e.g. 2000 Hz or even higher." Ex.1009, [0069]; Ex.1003, ¶186. Carlson expressly claims actively "shift[ing] the frequency of the emitted light" during operation (*i.e.*, shifting from a first frequency to a second frequency) so it is "substantially outside of frequency of noise and/or environmental signals" such as sunlight. Ex.1009 (Carlson), Claims 10-11; *see id*., [0067]-[0069]; Ex.1003, ¶¶186-187; '533 FWD (J. Horvath, concurring) at 7-8. Carlson also recognized that sunlight interference is normally temporary and can occur at different frequencies (*e.g.*, when driving at different speeds down a tree lined street) so a skilled person would have recognized that the pulse frequency can vary. Ex.1009, [0068]; Ex.1003, ¶187; *see* Ex.1060, 34:5-35:7; '533 FWD (J. Horvath, concurring) at 9, 11-13. A skilled person would recognize that Carlson teaches increasing a frequency, which corresponds to increasing the "*pulse rate*" of the emitter, in the presence of sunlight to increase "significantly the Signal-to-Noise and Signal-to-Background ratio." Ex.1009, [0069]; Ex.1003, ¶¶188-189; '533 FWD at 33; '533 FWD (J. Horvath, concurring) at 6-15.

Thus, to the extent a skilled person would not have recognized from Lisogurski alone that one can increase signal-to-noise by increasing the firing rate of its LEDs, doing so would have been obvious in view of Carlson. Ex.1003, ¶190. Both references identify the same problem – ambient light – and the need to offset its negative impact on the signal-to-noise ratio. Ex.1003 ¶¶190; Ex.1011, 9:46-60; Ex.1009, [0067]-[0069]. Lisogurski also can readily be modified based on Carlson to increase the firing rate to increase signal-to-noise whenever sunlight is present, given that Lisogurski teaches that the firing rate of the LEDs can be adjusted in response changes in environmental conditions, such as changes in background noise or ambient light. Ex.1011, 1:67-2:3, 5:55-61, 9:46-60, 37:6-18; Ex.1003, ¶191.

Consequently, a skilled person would have found it obvious to configure Lisogurski to increase the LED firing rate (frequency) in the presence of noise to increase signal-to-noise ratio as taught by Carlson. Ex.1009, [0067]-[0069], Claims 10-11; Ex.1003, ¶¶190-191; ’533 FWD at 34. The skilled person also would have recognized that configuring Lisogurski to increase the signal-to-noise ratio by increasing the LED firing rate would have been a predictable arrangement of known elements, with each performing the same function it was known to perform and yielding what one would expect from the arrangement. Ex.1003, ¶192.

m) "the detection system… generate[s] a first signal responsive to light received while the [LEDs] [or semiconductor sources] are off"

Lisogurski teaches use of a "dark subtraction" technique for "remov[ing] ambient and background signals." Ex.1011, 13:60, 6:7-10; Ex.1003, ¶194; *see generally*, Ex.1011, 6:7-19, 13:60-14:10, 16:33-54 (describing dark subtraction process). Lisogurski explains that "the system [may] turn[] on a first light source, followed by a 'dark' period, followed by a second light source, followed by a 'dark' period." Ex.1011, 6:12-15. "The system may measure the ambient light detected by the detector during the 'dark' period…" ("*received while the light emitting diodes are off*"). Ex.1011, 6:16-19; 13:67-14:6 (measuring a "dark signal" by "determining the amount of dark signal during [each] 'off' period 220.") Ex.1003, ¶¶195-196.

The front-end processing circuitry uses the current measured when the LEDs are off to generate a "dark signal" ("*first signal*"). Ex.1011, 13:35-41 ("Demultiplexer 156 may… generate… a ***first dark signal***…, and ***a second dark signal***…"), 12:59-13:6, 11:14-16 (detectors "convert[] the intensity of the received light into an electrical signal"); Ex.1003, ¶¶197-198.

The dark signal 222 (also called dark current 222) is measured during dark period 220, and is depicted in Figures 2A and 2B, annotated below:

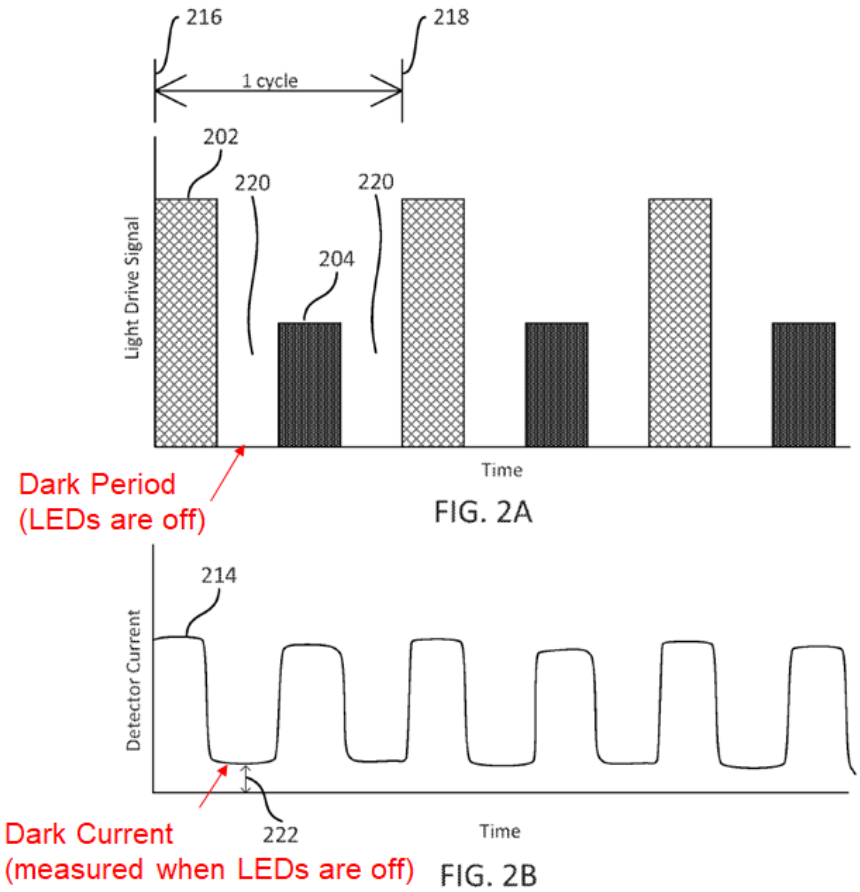

Ex.1003, ¶196; Ex.1011, Figs. 2A (current used to illuminate the LEDs) & 2B (the current output by the detector), 12:64-13:6; *see id.*, 13:67-14:6; Ex.1003, ¶198.

n) "[the detection system] generate[s] a second signal responsive to light received while at least one of the [LEDs] [or semiconductor sources] is on"

In its dark signal subtraction process, Lisogurski's detectors and front-end processing circuitry also measure the signal while at least one LED is on such that they capture a portion of the optical beam reflected from tissue. Ex.1003, ¶¶200-201. "The system may measure… ***the signals received during the first and second 'on' periods***" ("*while at least one of the light emitting diodes is on*").

Ex.1011, 6:12-19. The light received by the detectors includes "the light that is reflected by or has traveled through the subject's tissue" ("*at least a portion of the optical beam reflected from the tissue*"). Ex.1011, 17:40-42; *id.*, 11:12-20.

The system will generate a red signal and an IR signal ("*second signal*"). Ex.1011, 13:67-14:2, 16:52-53; *see id.*, 11:14-16, 13:35-41 ("Demultiplexer 156 may… generate a Red signal [and] an IR signal…"), 17:8-10; Ex.1003, ¶¶201-202. This is depicted in Figures 2A and 2B, annotated below:

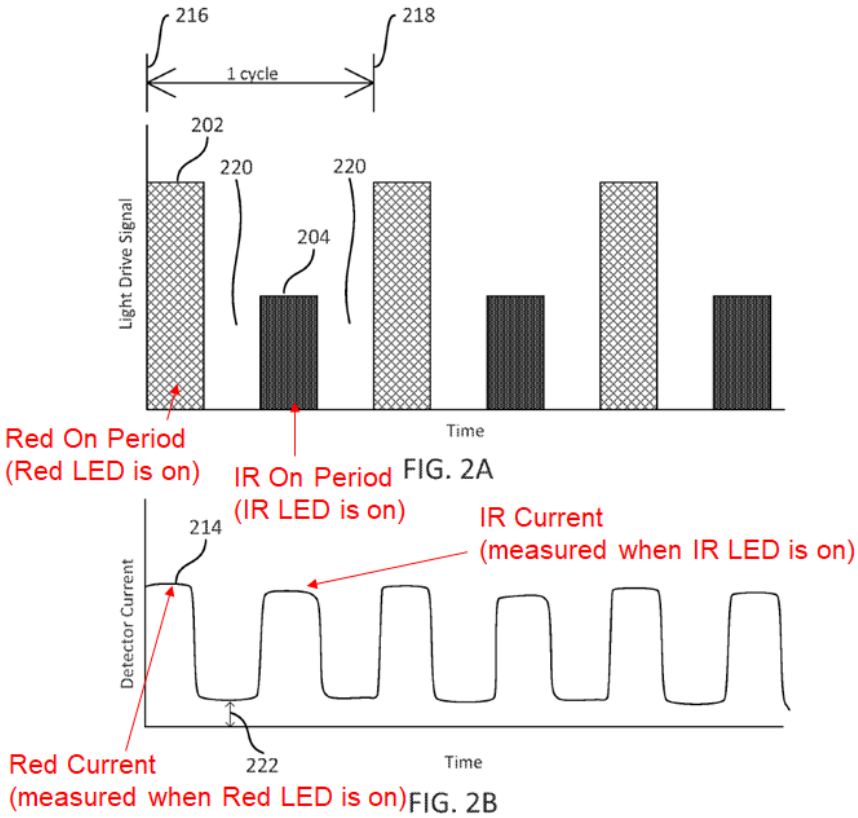

Ex.1003, ¶170; Ex.1011, Figs. 2A & 2B, 12:52-13:6.

o) "[the detection system further configured to] increase the signal-to-noise ratio by differencing the first signal and the second signal"

Lisogurski describes the ambient light in the signal as noise. Ex.1011, 14:46-55 (discussing "ambient light noise" in the analog signals). Lisogurski explains that the dark subtractor subtracts the dark signal from each of the red and IR signals to generate "adjusted Red and IR signals." Ex.1011, 13:60-14:10; *id.*, 16:51-54 ("The system may subtract the… dark level from the levels received during red [or IR] 'on' portion[s]"). Thus, Lisogurski teaches subtracting ("*differencing*") the dark signal ("*first signal*") from the IR or Red signal ("*second signal*"). Ex.1003, ¶¶204-205.

Because the dark signal subtraction process removes noise (ambient light) from the red and IR signals, a POSA would have understood that it increases the signal-to-noise ratio. Ex.1003, ¶206. The signal-to-noise ratio is calculated by dividing the signal power by the noise power: $\frac{S}{N}$. Ex.1003, ¶206. Decreasing the noise necessarily increases the signal-to-noise ratio. *Id.*

6. Claim 17

Claim 17 depends on claim 15 above and further recites "*wherein a detector output from at least one of the plurality of spatially separated detectors is coupled to an amplifier having a gain configured to be adjusted to*

improve detection sensitivity." Lisogurski discloses this limitation for the same reasons described in §VI.A.5.g) above.

B. Ground 2: Claims 1-4, 7-12, and 15-22 are taught by a combination of Lisogurski, Carlson, and Tran

As explained above, Lisogurski and Carlson, render claims 1, 7, 15, and 17 obvious. Dependent claims 2-4, 8-12, 16, and 18-22, which add elements related to artificial intelligence, are obvious over Lisogurski and Carlson in further view of Tran. Additionally, to the extent the Board finds Lisogurski does not teach a smartphone or tablet as specified in claims 1, 7, and 15, that element is obvious based on Tran.

1. Overview of Tran

Tran discloses a heart monitoring system that uses a statistical analyzer to monitor patient health. Ex.1064, Abstract, Fig. 1, 8:28-53. The patient wears a monitoring device, such as a watch, that communicates a patient's health information to a server that passes it to a statistical and data driven analyzers. Ex.1064, 8:44-53; 9:23-54, 11:1-31, 54:14-57:13; Ex.1003, ¶209. The monitoring device can be used with a smartphone, which allows data to be collected and transmitted when a patient is away from home. Ex.1064, 34:9-31; *see id.*, 33:50-34:40. The monitored health information includes pulse oximetry measurements. Ex.1064, 25:36-43, 26:17-29, 36:62-37:13, 46:25-42, 60:58-61:37, 74:29-67. Tran's statistical analyzers can help, for example, "track a patient's risk of stroke

or heart attacks." Ex.1064, 54:35-36. The analyzers use "artificial neural networks," a form of artificial intelligence, to help classify potential risks to warn patients or health-care providers. Ex.1064, 22:24-28, 74:45-46, 75:18-20, 94:57-65; Ex.1003, ¶209.

2. A Skilled Person Would Have Modified Lisogurski and Carlson Based on Tran

A skilled person reading Lisogurski would have looked to other references that disclosed additional techniques for improving the operation of optical sensing systems, as doing so was part of the ordinary design process for such devices. *See* §VI.A.3; Ex.1003, ¶¶210-214.

Lisogurski describes processing its collected data to allow tracking of patient status. As described in §III.B, market trends would have motivated a skilled person reading Lisogurki to find additional ways to use the tracked data in a mobile or remote scenario. Ex.1003, ¶211. One example is described in Tran, which uses an "artificial neural network" to analyze, among other things, pulse oximetry data, and provide warnings regarding a patient's condition. Ex.1064, 22:23-28; *compare* Ex.1064, 36:62-37:13 *with* Ex.1011, 10:48-64; *see* Ex.1011, 15:43-65, 18:58-65. Tran explains that its data analysis technique "provides an in-depth, cost-effective mechanism to evaluate a patient's cardiac condition." Ex.1064, 5:5-6. Tran's technique allows for "[c]ertain cardiac conditions [to] be controlled, and in some cases predicted, before they actually occur." Ex.1064,5:6-

7. A skilled person would have been motivated to incorporate Tran's data analysis technique into Lisogurski to achieve the same benefits. Ex.1003, ¶212.

Lisogurski, Carlson, and Tran are analogous references, each describing techniques applicable to measurements taken by wearable optical sensing devices, such as pulse oximeters. Ex.1003, ¶214. The skilled person would have considered the references together when implementing a system based on Lisogurski's teachings. Ex.1003, ¶¶213-214.

1. Claims 1, 7, 15, and 17

Claims 1, 7, and 15 specify that the wearable device work with a "*smart phone or tablet*."[8] As explained above, Lisogurski describes the monitor as a computing device that can be portable, battery-powered, and have a touchscreen. A skilled person considering that passage would have recognized that one device that could be used for the monitor is a smartphone, as described in Tran. Ex.1003, ¶¶216. Tran teaches that using a smartphone with a portable, wearable sensor allows data to be sent to remote devices even when the person wearing it is away from home. Ex.1064, 34:4-25. This can allow detection of emergency situations or potential problems when person is engaged in daily activities. Ex.1064, 33:58-34:3, 34:25-40. Using a smartphone as taught by Tran would allow Lisogurski's

[8] Claim 17 depends from 15, and is otherwise taught by Lisogurski and Carlson.

monitor to remain in contact with other monitoring devices (*e.g.*, MPPM 326) even when the person wearing it was away from home or a WiFi network. Ex.1003, ¶216. This is consistent with the state of the art (*see* §III.B), and there was a general trend in the industry to develop mobile sensor systems for use with tablets and smartphones.

2. Claims 2, 10, and 18

Claims 2, 10, and 18 depend from claims 1, 7, and 15, respectively, and recite "*the wearable device is configured to use artificial intelligence [in making decisions associated with / to process] at least a portion of the output signal*."

Tran's data analysis technique uses data gathered from a patient, such as data measured by "wearable patient monitoring appliances." Ex.1064, 9:23-53. Once collected, Tran's system "feed[s] the data to a statistical analyzer such as a neural network…." Ex.1064, 11:6-30; *see id.*, 3:6-13. Tran's data driven analyzers may incorporate "engineered (artificial) neural networks," which is a form of "*artificial intelligence*." Ex.1064, 22:24-30; Ex.1003, ¶218. Tran's neural networks analyze patient data to "flag potentially dangerous conditions," Ex.1064, 11:6-8, which "can be specified as an event or a pattern that can cause physiological… damage to the patient," Ex.1064, 11:16-19. Tran further explains that when such conditions occur, the system "displays a warning to a patient and

connects the patient to the appropriate emergency response authority." Ex.1064, 87:33-37; *see id*., 85:60-61, 88:48-50,90:58-61.

A skilled person would have been motivated to use Tran's neural networks and associated techniques in Lisogurski's device to improve the processing of the collected physiological signals ("*at least a portion of the output signal*"). Ex.1003, ¶219. Lisogurksi's "*wearable device*" would use Tran's neural networks to process patient data to flag dangerous conditions ("*making [a] decisions*"), and when detected, display a warning to the patient. Ex.1003, ¶219.

3. Claims 3, 8, and 16

Claims 3 and 16 depend from claims 2 and 15, respectively, and recite "*the wearable device is at least in part configured to identify an object, and to compare a property of at least some of the output signal to a threshold*." Claim 8 depends on claim 7 and recites the same, except specifies that the wearable device or smartphone or tablet performs the comparison.

Lisogurski teaches that its sensor can detect when it has fallen off. Ex.1011, 36:66-37:2 ("the system may detect a signal indicative of a system error such as… a probe-off signal"). Thus, Lisogurski's sensor can identify when an object (*e.g.*, a wrist or an ear) is in range of the sensor ("*the wearable device is at least in part configured to identify an object*"). Ex.1003, ¶221.

Lisogurski discloses comparing the detected signals to a variety of thresholds. Ex.1003, ¶222. For example, Lisogurski states that "the blood oxygen saturation may be compared to a threshold or target value, such as threshold 830," Ex.1011, 24:41-43, and the outcome may be used to change the device's mode of operation, Ex.1011, 24:43-57. Lisogurski also compares the output signal to thresholds to identify portions of the signal that may be of interest for further processing or that could be used to change the light source modulation. Ex.1011, 40:42-41:39, claims 15-18. Lisogurski's system also can detect increases in ambient light and noise, and change modulation techniques in response. Ex.1011, 9:46-52, 37:8-14. This process would include comparing the detected signal to a threshold to determine when the noise level has changed. Ex.1003, ¶222.

Similarly, Tran's data analysis technique allows the user to choose "a condition that they would like to be alerted to and by providing the parameters (e.g., threshold value for the reading) for alert generation." Ex.1064, 27:53-56. If such a condition is met, the user receives an alert according to their set preference. Ex.1064, 27:26-28. A skilled person would have recognized that the wearable device compare its measured data against this threshold. Ex.1003, ¶223.

4. Claim 9

Claim 9 depends on claim 8 and further recites "*a detector output from at least one of the plurality of spatially separated detectors is coupled to an*

amplifier having a gain configured to be adjusted to improve detection sensitivity." Lisogurski discloses this limitation for the same reasons as shown in §VI.A.5.g) above.

5. Claims 11 and 19

Claims 11 and 19 depend from claims 10 and 18, respectively, and recite the AI includes "*pattern identification or classification*" or "*a pattern matching algorithm.*"

Tran explains that neural networks are "used to recognize each pattern as the neural network is quite robust at recognizing user habits or patterns." Ex.1064, 23:40-42; *see id.*, 23:39-50. Specifically, Tran uses these neural networks to analyze "a patient's vital signs." Ex.1064, 11:1-8; *see id.*, 9:23-54. Patterns in these vital signs are flagged if they represent possible dangerous conditions. Ex.1064, 11:16:19, 23:39-50 ("a neural network is used to ***recognize each pattern*** as the neural network is quite robust at recognizing user habits or patterns"); *id.*, 22:23-59, 23:4-16; Ex.1003, ¶227. The data analysis technique also includes a Hidden Markov Model to "derive a set of reference pattern templates, each template is representative of an identified patter in a vocabulary set of reference treatment patterns." Ex.1064, 24:45-18; *id.*, 80:24-81:3. Tran also teaches the neural network and Hidden Markov Model (HMM) can be used together. Ex.1064, 24:58-60. Accordingly, Tran's neural network and HMM are a "*pattern matching*

algorithm" and they perform "*pattern identification or classification*." Ex.1003, ¶227.

6. Claims 4, 12, 21, and 22

Claims 4, 12, and 21 depend on claims 3, 10, and 15, respectively, and recite "*the wearable device is configured to perform pattern identification or classification based on at least a part of the output signal*." Claim 22 depends on claim 21 and further recites "*the pattern identification or classification comprises a pattern matching algorithm….*" As explained for claims 11 and 19, Tran's neural network and HMM use "*pattern identification or classification*" and "*a pattern matching algorithm*," and meet these claims for the same reasons.

7. Claim 20

Claim 20 depends on claim 18 and recites "*the artificial intelligence comprises spectral fingerprinting*."

Tran discloses that its neural networks analyze patient's blood oxygen saturation. Ex.1064, 11:1-8, 36:61-37:12; Ex.1003, ¶231. Blood oxygen saturation is determined by measuring the ratio of oxygenated to unoxygenated hemoglobin in blood. Ex.1064, 52:31-35, 37:2-13; Ex.1003, ¶231. This uses a form of spectral fingerprinting by measuring the blood's absorbance or reflectance of different wavelengths of light to determine how much oxygenated hemoglobin and unoxygenated hemoglobin is present. Ex.1064, 37:2-13, 50:10-15.

Accordingly, Tran's neural network includes "*spectral fingerprinting*." Ex.1003, ¶231.

C. Ground 3: Lisogurski, Carlson, Tran, and Isaacson Render Obvious Claims 5 and 13

Claims 5 and 13 limit claims 4 and 12 and specify certain spacing requirements for the LEDs and photodetectors. Lisogurski, Carlson, and Tran in further combination with Isaacson would have rendered these embodiments obvious.

1. Overview of Isaacson

Isaacson discloses a sensor for use in pulse oximetry systems, Ex.1063, 2:57-58, 2:63-66, 6:32-34, that can make measurements at different layers of tissue, Ex.1063, 4:35-49. Ex.1003, ¶233. The sensor can be used in oximeter systems, such as one on the subject's arm. Ex.1063, 2:63-65, 3:66-4:3. The sensor includes two emitters (*e.g.*, LEDs) and two detectors separated by varying distances. Ex.1063, 1:21-40, 3:44-45. Each emitter can be configured to emit a different wavelength, or the same wavelengths. Ex.1063, 3:45-54.

Isaacson teaches that the distances between the emitters and detectors are selected to allow measurement of light that has penetrated different depths of tissue, with greater spacing allowing measurement of greater depth. Ex.1063, 1:41-45, 5:10-15; Ex.1003, ¶¶234-235. Each emitter is separated from one detector by a short path and from the other detector by a long path. Ex.1063, 1:28-

40. The lengths of the two short paths are equal, and the lengths of the long paths are equal. Ex.1063, 4:63-5:15; Ex.1003, ¶234.

Annotated Figure 1 below depicts the sensor's arrangement, with the emitters (10 and 20) in red, detectors (12 and 22) in blue, the long distances/paths (14A&B and 16A&B) in green, and the short distances/paths (24A&B and 26A&B) in yellow:

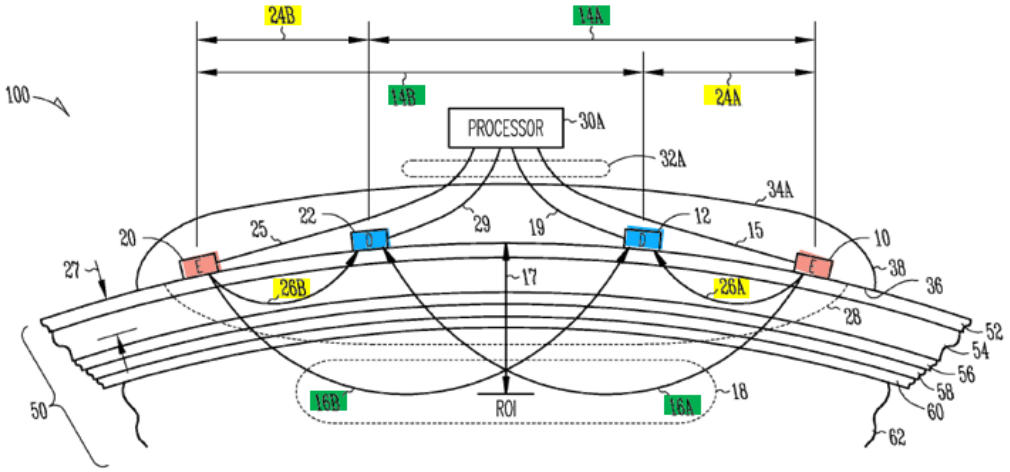

Fig. 1

Ex.1003, ¶235. The short paths (26A&B) traverse exclusion region 28 (yellow, below) on the surface of the tissue. Ex.1003, ¶¶236-237. The long paths (16A&B) traverse region of interest 18 (green, below) deeper in the tissue. *Id.*

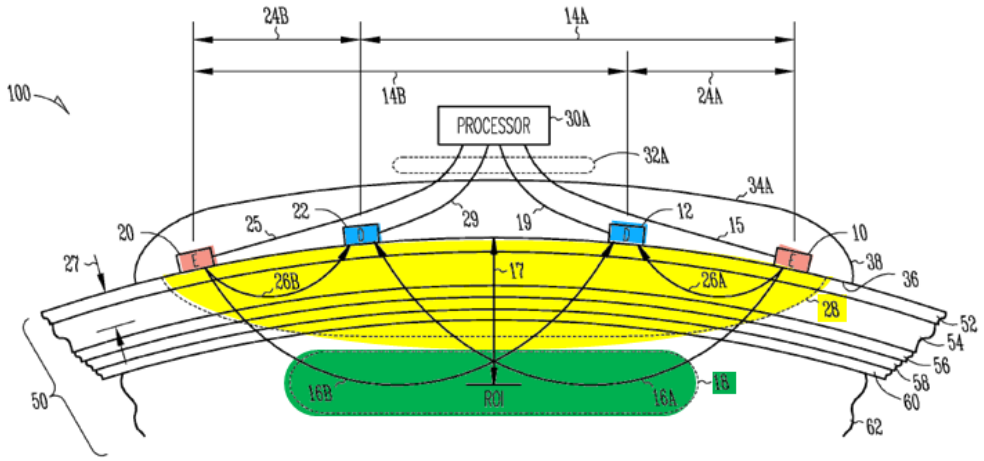

Fig. 1

Ex.1003, ¶¶236-237.

Isaacson explains that the measurements of the short paths can be used to remove any contributions from the exclusion region 28 to the long path measurement by subtracting "the optical absorbance corresponding to the short paths… from the optical absorbance corresponding to the long paths." Ex.1063, 7:59-60; Ex.1003, ¶237.

2. A Skilled Person Would Have Modified the Combined System of Lisogurski, Carlson, and Tran to Incorporate Elements Shown in Isaacson

As described for Ground 1, a skilled person reading Lisogurski would have looked to other references that disclosed additional techniques for improving the operation of optical sensing systems, as doing so was part of the ordinary design process. *See* §VI.A.3; Ex.1003, ¶238.

Lisogurski teaches that its wearable sensor can include multiple LEDs and can include multiple detectors which can be spaced apart. Ex.1011, 17:39-45.

Lisogurksi, however, does not provide further guidance on how to space the LEDs and detectors. Ex.1003, ¶¶239-240. That would have led the skilled person to Isaacson, which describes how to arrange multiple light sources and multiple detectors in pulse oximetry devices. Ex.1063, 1:21-26, 4:64-5:15; Ex.1003, ¶¶241-242. Isaacson explains it is beneficial to measure the oxygen saturation of particular areas of biological tissues, Ex.1063, 2:47-52, for example to allow measurements to be focused on deeper layers of tissue, and to exclude contributions from surface regions. Ex.1063, 1:46-51, 7:59-62; *see id.*, 6:43-45.

Lisogurski recognizes that light is attenuated differently depending on the tissue, and that skin pigmentation in particular can have an adverse effect on signal quality. Ex.1011, 19:42-50 ("The interaction of the emitted light with the subject may cause the light to become attenuated… [T]he attenuation or the light may depend on… the tissue with which the light interacts."), 44:43-48 ("The red waveforms may be 25% of the intensity of the IR waveforms, as may occur in patients with dark skin pigmentation"). Isaacson teaches this problem of skin interference can be addressed by using signals detected from detectors spaced different distances from an emitter. Ex.1003, ¶243; Ex.1063, 7:59-62, Fig. 1.

Isaacson also states that its arrangement can be used in sensors applied to various portions of the body, such as one pressed against the arm. Ex.1063, 4:1-3. Isaacson also states that its sensor can be wireless and can wirelessly transmit the

detected signals for another device for processing. Ex.1063, 3:26-27. Lisogurski's device similarly discloses that its wireless sensor can be applied to locations including the arm such as the wrist. Ex.1011, 4:15-20, 17:55-59; Ex.1003, ¶246.

Lisogurski, Carlson, Tran, and Isaacson are also analogous references, each describing techniques for improving the measurements taken by optical sensing devices, such as pulse oximeters. Ex.1003, ¶¶244-245. The skilled person would have considered the references together when implementing a system based on Lisogurski's teachings. Ex.1003, ¶246.

a) Claims 5 and 13

Isaacson discloses a sensor that includes at least two LEDs and at least two photodetectors where the detectors have different spacing from each emitter to allow measurements on different layers of tissue. Ex.1063, 1:27-40, 1:46-50, 1:54-58. That sensor is shown in Isaacson Figure 1, which shows emitters 10 and 20 (red) on the outside, and detectors 12 and 22 (blue) on the inside.

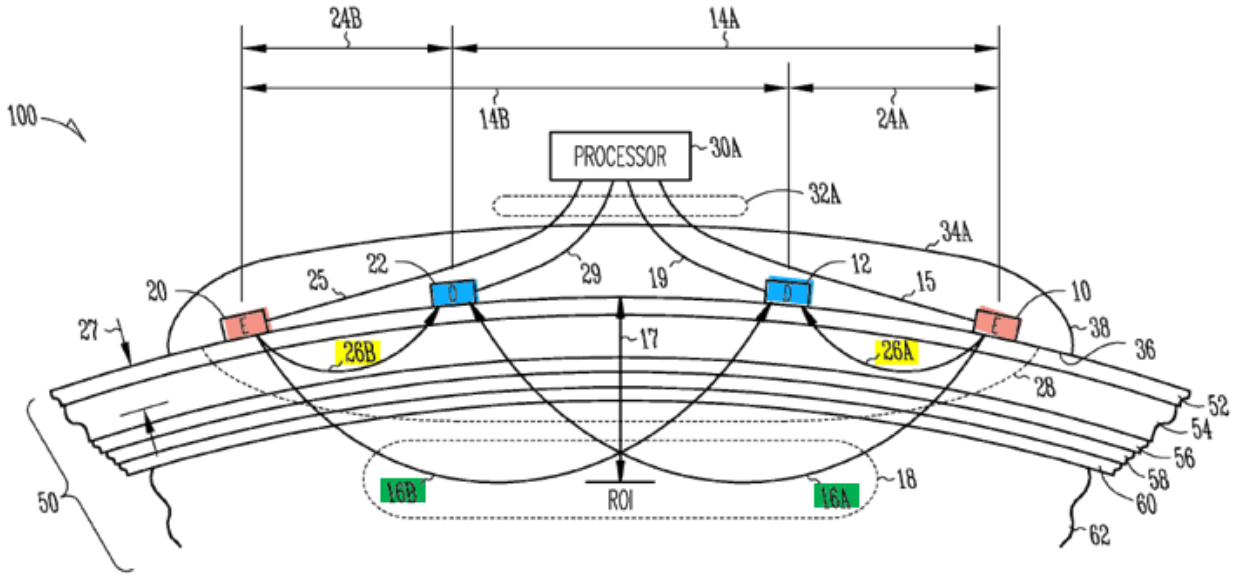

Fig. 1

Ex.1003, ¶¶248-249.

Isaacson states that emitter 10 can be configured to emit one wavelength of light (*e.g.*, red) and emitter 20 can be configured to emit a different wavelength of light (*e.g.*, IR). Ex.1063, 3:52-54, 6:37-39. Isaacson also explains that each detector captures light emitted from both LEDs after the light is reflected off a patient: detector 22 receives light (26B, yellow) from emitter 20 and light (16A, green) from emitter 10 and detector 12 receives light (16B, green) from emitter 20 and light (26A, yellow) from emitter 10. Ex.1063, 4:35-49, 6:21-29; *see id.*, 1:27-40. Isaacson then uses these signals to remove the contribution of light from surface regions. Ex.1063, 1:46-51, 7:59-62.

Thus, as shown in Figure 1 above, emitter 20 ("*one [LED]*") is at a "*first distance*" from detector 12 ("*one… detector*") and at a "*second distance*" from

detector 22 ("*another… detector*"), where the first distance is different than the second distance. Detector 12 ("*one… detector*") generates "*a third signal*" from light 16B from emitter 20 ("*one [LED]*") (emits IR light). Ex.1003, ¶¶249-53. And detector 22 ("*another… detector*") generates "*a fourth signal*" light 26B from emitter 20 ("*one [LED]*") (emits IR light). Ex.1003, ¶¶249-53.

In addition, detector 12 ("*one… detector*") is at a "*third distance*" from emitter 20 ("*first… [LED]*") and at a "*fourth distance*" from emitter 10 ("*second… [LED]*"), where the third distance is different than the fourth distance. Detector 12 ("*one… detector*") generates "*a fifth signal*" from light 16B from emitter 20 ("*first… [LED]*") (emits IR light). Ex.1003, ¶¶249-52, 254. And detector 12 ("*one… detector*") generates "*a sixth signal*" light 26A from emitter 10 ("*second… [LED]*") (emits red light). Ex.1003, ¶¶249-52, 254.

Thus, the combination of Lisogurski, Carlson, Tran, and Isaacson suggests this element of the claims.

D. <u>Ground 4</u>: Lisogurski, Carlson, Tran, Isaacson, and Valencell-093 Render Obvious Claims 6, 14, and 23

1. Overview of Valencell-093

Valencell-093 describes an optical sensor that can measure heart rate and blood constituents of the user such as blood oxygen level. Ex.1005, [0006], [0050], [0090], [0109]. Its specific objective is "to teach how to make a wearable monitor…that may provide accurate information on physiological conditions ***in the***

midst of environmental noise, such as noise from ambient light and/or sunlight." Ex.1005, [0112]. Valencell-093 teaches incorporating the optical sensor into a several types of devices including wristband and a headband. Ex.1005, [0050], [0150], Fig. 23. It explains the sensor can be surrounded by a light guiding region to "help[] direct light to and/or from the sensor module [] and a blood flow region within the body part." Ex.1005, [0152]. It can include a "reflector, such as a metal, metallic alloy…, [or] reflective plastic." Ex.1005, [0152].

2. A Skilled Person would combine Lisogurski, Carlson, Tran, Isaacson, and Valencell-093

A skilled person would have considered the systems described in Lisogurski in conjunction with Valencell-093, as they both concern analogous miniaturized wireless puloximetry devices having the same applications (*e.g.*, mobile monitoring of pulse and other physiological characteristics of a person). Ex.1003, ¶259; Ex.1005, [0003], [0006], [0012].

As explained for Ground 1 above, Lisogurski describes a PPG system that is designed to optimize power consumption, (Ex.1011, 1:4-6, 3:50-53, 4:63-67), and increase the battery life of a wearable sensor, *e.g.*, one worn on a wrist, Ex.1011, 1:16-18, 4:15-20, 17:51-58. Lisogurski teaches several techniques for increasing the signal-to-noise ratio of measured signals while minimizing power consumption. Ex.1011, 9:46-52. These teachings would motivate a skilled person

to look for other techniques for achieving the same objectives, as this was part of the natural design process. Ex.1003, ¶¶260-61.

This would have led a skilled person to Valencell-093. Ex.1003, ¶262. For example, Valencell-093 describes configuring an optical sensor to maximize optical coupling and minimize relative motion between the device and the user's skin in a wearable device. Ex.1005, [0151]-[0152]. These techniques include using light guiding elements to allow the sensors to be positioned in a manner that focuses on the blood flow and reduced detection of environmental noise. Ex.1005, [0153]. Specific reasons why a skilled person would have added these features to Lisogurski are provided in the next section, below. *See also* Ex.1003, ¶263-66.

Lisogurski, Carlson, Tran, and Valencell-093 are analogous systems with common applications and utility; both describe techniques for improving the power consumption of wearable optical sensing devices while improving their performance and utility. Ex.1003, ¶266. The skilled person would have considered the references together when implementing a system based on Valencell-093's teachings. *Id*.

3. Dependents Claims 6, 14, and 23

Claims 6, 14, and 23 depend from claims 5, 13, and 15, respectively and specify "*a reflective surface positioned to reflect at least a portion of [the lens output] light reflected from the tissue.*"

Valencell-093 teaches that a sensor can be surrounded by a light guiding region to "help[] direct light to and/or from the sensor module [] and a blood flow region within the body part." Ex.1005, [0152]. This region can include a "reflector, such as a metal, metallic alloy…, [or] reflective plastic." Ex.1005, [0152]. Thus, Valencell-093 teaches use of "*reflective surfaces*" to reflect light that has been reflected back from tissue. Ex.1003, ¶270. Examples are shown in the figures below.

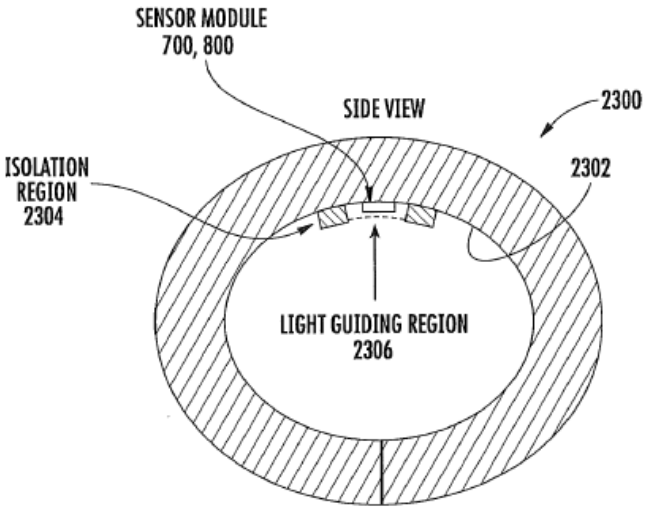

FIG. 24

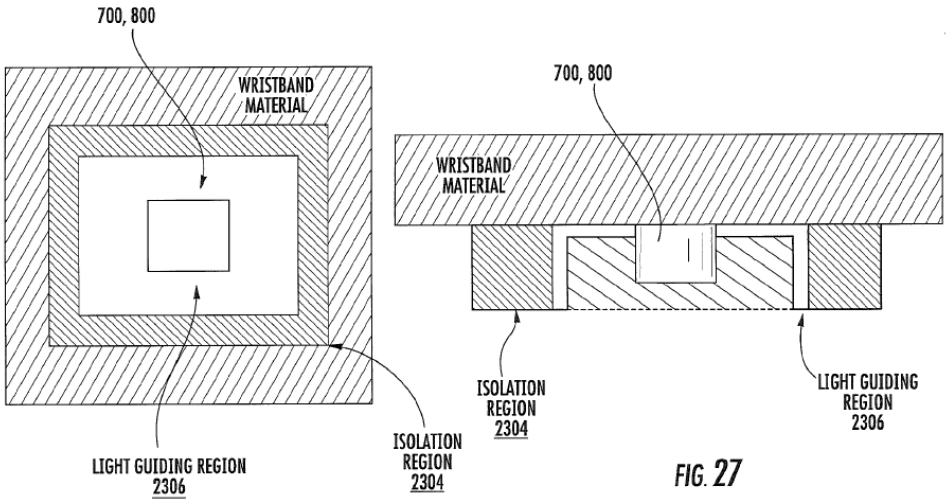

FIG. 26 FIG. 27

The light guiding region assists in coupling the sensor to the body part (*e.g.*, wrist) and in reducing interference from environmental noise. Ex.1005, [0153]. A skilled person would have understood this increases the signal-to-noise ratio. Ex.1003, ¶¶270-271.

A skilled person would have been motivated to implement the reflective surface described by Valencell-093 in the combined system of Lisogurski, Carlson, Tran, and Isaacson. Ex.1003, ¶272. As Valencell-093 explains, using a reflective surface helps increase a signal-to-noise ratio. Ex.1005, [0153]. This guidance alone would have motivated a skilled person to make the modification above, especially in view of Lisogurski's express goal to improve signal-to-noise ratio. Ex.1011, 6:3-6, 9:49-60, 13:60-14:10, 14:40-55, 37:6-20; Ex.1003, ¶272. The skilled person also would have recognized that adding a reflective surface to Lisogurski as Valencell-093 teaches this would improve signal measurement

efficiency and complement operation of the Lisogurski system. Ex.1003, ¶272; *see* Ex.1009, 15:53-55.

The skilled person also would have been familiar with the materials and/or coatings described by Valencell-093 (Ex.1005, [0152]) that reflect light and would have been able to integrate them into Lisogurski's device with routine effort. Ex.1003, ¶273. A skilled person thus would consider the addition of a reflective surface to Lisogurski's sensor to be a predictable arrangement of known elements, with each performing the same function it was known to perform and yielding what one would expect from the arrangement.

E. No Secondary Considerations Exist

As described above, the combination of Lisogurski, Carlson, and Tran, with or without Isaacson or Valencell-093, render the challenged claims of the '484 patent obvious. No secondary indicia of non-obviousness exist having a nexus to the putative "invention" of these claims contrary to that conclusion. Petitioner reserves its right to respond to any assertion of secondary indicia of non-obviousness advanced by Patent Owner.

VII. Conclusion

Apple respectfully submits that there is a reasonable likelihood that Apple will prevail in establishing the challenged claims are unpatentable, and requests that trial be instituted.

Dated: January 22, 2021

Respectfully submitted,

/Jeffrey P. Kushan/
Jeffrey P. Kushan
Registration No. 43,401
Sidley Austin LLP
1501 K Street NW
Washington, DC 20005
jkushan@sidley.com
(202) 736-8914
Lead Counsel for Petitioner

Ching-Lee Fukuda
Reg. No. 44,334
Sidley Austin LLP
787 Seventh Avenue
New York, NY 10019
clfukuda@sidley.com
(212) 839-7364

Thomas A. Broughan III
Reg. No. 66,001
Sidley Austin LLP
1501 K Street NW
Washington, DC 20005
tbroughan@sidley.com
kcover@sidley.com
(202) 736-8314

Backup Lead Counsel for Petitioner

Claim Appendix

The challenged claims are shown below:

1. A system for measuring one or more physiological parameters and for use with a smart phone or tablet, the system comprising:

a wearable device adapted to be placed on a wrist or an ear of a user, including a light source comprising a plurality of semiconductor sources that are light emitting diodes, each of the light emitting diodes configured to generate an output optical light having one or more optical wavelengths;

the wearable device comprising one or more lenses configured to receive a portion of at least one of the output optical lights and to direct a lens output light to tissue;

the wearable device further comprising a detection system configured to receive at least a portion of the lens output light reflected from the tissue and to generate an output signal having a signal-to-noise ratio, wherein the detection system is configured to be synchronized to the light source;

wherein the detection system comprises a plurality of spatially separated detectors, and wherein at least one analog to digital converter is coupled to at least one of the spatially separated detectors;

wherein a detector output from the at least one of the plurality of spatially separated detectors is coupled to an amplifier having a gain configured to improve detection sensitivity;

the smart phone or tablet comprising a wireless receiver, a wireless transmitter, a display, a speaker, a voice input module, one or more buttons or knobs, a microprocessor and a touch screen, the smart phone or tablet configured to receive and process at least a portion of the output signal, wherein the smart phone or tablet is configured to store and display the processed output signal, and wherein at least a portion of the processed output signal is configured to be transmitted over a wireless transmission link;

a cloud configured to receive over the wireless transmission link an output status comprising the at least a portion of the processed output signal, to process the received output status to generate processed data, and to store the processed data;

wherein the output signal is indicative of one or more of the physiological parameters, and the cloud is configured to store a history of at least a portion of the one or more physiological parameters over a specified period of time;

the wearable device configured to increase the signal-to-noise ratio by increasing light intensity of at least one of the plurality of semiconductor

sources from an initial light intensity and by increasing a pulse rate of at least one of the plurality of semiconductor sources from an initial pulse rate; and

the detection system further configured to:

generate a first signal responsive to light received while the light emitting diodes are off,

generate a second signal responsive to light received while at least one of the light emitting diodes is on, and

increase the signal-to-noise ratio by comparing the first signal and the second signal.

2. The system of claim 1, wherein the wearable device is configured to use artificial intelligence in making decisions associated with at least a portion of the output signal.

3. The system of claim 2, wherein the wearable device is at least in part configured to identify an object, and to compare a property of at least some of the output signal to a threshold.

4. The system of claim 3, wherein the wearable device is configured to perform pattern identification or classification based on at least a part of the output signal.

5. The system of claim 4, wherein at least one of the spatially separated detectors is located at a first distance from at least one of the light emitting

diodes and at least another of the spatially separated detectors is located at a second distance from the at least one of the light emitting diodes, and the at least one of the spatially separated detectors is configured to generate a third signal responsive to light from the at least one light emitting diode and the at least another of the spatially separated detectors is configured to generate a fourth signal responsive to the light from the at least one of the light emitting diodes; and

wherein at least one of the spatially separated detectors is located at a third distance from a first one of the light emitting diodes and at a fourth distance from a second one of the light emitting diodes, and is configured to generate a fifth signal responsive to light from the first light emitting diode and a sixth signal responsive to light from the second light emitting diode, and wherein the first distance is different from the second distance, and the third distance is different from the fourth distance.

6. The system of claim 5, wherein the wearable device further comprises a reflective surface positioned to reflect at least a portion of the lens output light reflected from the tissue.

7. A system for measuring one or more physiological parameters and for use with a smart phone or tablet, the system comprising:

a wearable device adapted to be placed on a wrist or an ear of a user, and including a light source comprising a plurality of semiconductor sources, each of the semiconductor sources configured to generate an output light having one or more optical wavelengths;

the wearable device comprising one or more lenses configured to receive a portion of at least one of the output lights and to deliver a lens output light to tissue;

the wearable device further comprising a detection system configured to receive at least a portion of the lens output light reflected from the tissue and to generate an output signal having a signal-to-noise ratio, wherein the detection system is configured to be synchronized to the light source;

wherein the detection system comprises a plurality of spatially separated detectors, and wherein at least one analog to digital converter is coupled to at least one of the spatially separated detectors;

the smart phone or tablet comprising a wireless receiver, a wireless transmitter, a display, a speaker, a voice input module, one or more buttons or knobs, a microprocessor and a touch screen, the smart phone or tablet configured to receive and process at least a portion of the output signal, wherein the smart phone or tablet is configured to store and display the

processed output signal, and wherein at least a portion of the processed output signal is configured to be transmitted over a wireless transmission link;

a cloud configured to receive over the wireless transmission link an output status comprising the at least a portion of the processed output signal, to process the received output status to generate processed data, and to store the processed data;

wherein the output signal is indicative of one or more of the physiological parameters;

the wearable device configured to increase the signal-to-noise ratio by increasing light intensity of at least one of the semiconductor sources from an initial light intensity and by increasing a pulse rate of at least one of the semiconductor sources from an initial pulse rate; and

the detection system further configured to:

generate a first signal responsive to light received while the semiconductor sources are off,

generate a second signal responsive to light received while at least one of the semiconductor sources is on, and

increase the signal-to-noise ratio by comparing the first signal and the second signal.

8. The system of claim 7, wherein the wearable device is at least in part configured to identify an object, and a property of at least some of the output signal is compared by at least one of the wearable device, the smart phone or tablet to a threshold.

9. The system of claim 8, wherein a detector output from at least one of the plurality of spatially separated detectors is coupled to an amplifier having a gain configured to improve detection sensitivity.

10. The system of claim 9, wherein the wearable device is configured to use artificial intelligence to process at least a portion of the output signal.

11. The system of claim 10, wherein the artificial intelligence comprises pattern identification or classification.

12. The system of claim 10, wherein the wearable device is configured to perform pattern identification or classification based on at least a part of the output signal.

13. The system of claim 12, wherein at least one of the spatially separated detectors is located at a first distance from at least one of the light emitting diodes and at least another of the spatially separated detectors is located at a second distance from the at least one of the light emitting diodes, and the at least one of the spatially separated detectors is configured to generate a third signal responsive to light from the at least one light emitting

diode and the at least another of the spatially separated detectors is configured to generate a fourth signal responsive to the light from the at least one of the light emitting diodes; and

wherein at least one of the spatially separated detectors is located at a third distance from a first one of the light emitting diodes and at a fourth distance from a second one of the light emitting diodes, and is configured to generate a fifth signal responsive to light from the first light emitting diode and a sixth signal responsive to light from the second light emitting diode, and wherein the first distance is different from the second distance, and the third distance is different from the fourth distance.

14. The system of claim 13, wherein the wearable device further comprises a reflective surface positioned to reflect at least a portion of the lens output light reflected from the tissue.

15. A system for measuring one or more physiological parameters and for use with a smart phone or tablet, the system comprising:

a wearable device adapted to be placed on a wrist or an ear of a user, including a light source comprising a plurality of semiconductor sources that are light emitting diodes, each of the light emitting diodes configured to generate an output optical light having one or more optical wavelengths;

the wearable device comprising one or more lenses configured to receive a portion of at least some of the output optical light and to deliver a lens output light to tissue;

the wearable device further comprising a detection system configured to receive at least a portion of the lens output light reflected from the tissue and to generate an output signal having a signal-to-noise ratio, wherein the detection system is configured to be synchronized to the light source;

wherein the detection system comprises a plurality of spatially separated detectors, and wherein at least one analog to digital converter is coupled to at least one of the spatially separated detectors;

the smart phone or tablet comprising a wireless receiver, a wireless transmitter, a display, a microphone, a speaker, one or more buttons or knobs, a microprocessor and a touch screen, the smart phone or tablet configured to receive and process at least a portion of the output signal, wherein the smart phone or tablet is configured to store and display the processed output signal, and wherein at least a portion of the processed output signal is configured to be transmitted over a wireless transmission link;

a cloud configured to receive over the wireless transmission link an output status comprising the at least a portion of the processed output signal, to

process the received output status to generate processed data, and to store the processed data;

wherein the output signal is indicative of one or more of the physiological parameters;

the wearable device configured to increase the signal-to-noise ratio by increasing light intensity of at least one of the plurality of semiconductor sources from an initial light intensity; and

the detection system further configured to:

generate a first signal responsive to light received while the light emitting diodes are off,

generate a second signal responsive to light received while at least one of the light emitting diodes is on, and

increase the signal-to-noise ratio by comparing the first signal and the second signal.

16. The system of claim 15, wherein the wearable device is at least in part configured to detect an object, and a property of at least some of the output signal is compared to a threshold.

17. The system of claim 15, wherein a detector output from at least one of the plurality of spatially separated detectors is coupled to an amplifier having a gain configured to be adjusted to improve detection sensitivity.

18. The system of claim 15, wherein the wearable device is configured to use artificial intelligence in making decisions associated with at least a portion of the output signal.

19. The system of claim 18 wherein the artificial intelligence comprises a pattern matching algorithm.

20. The system of claim 18 wherein the artificial intelligence comprises spectral fingerprinting.

21. The system of claim 15, wherein the wearable device is configured to perform pattern identification or classification based on at least a part of the output signal.

22. The system of claim 21, wherein the pattern identification or classification comprises a pattern matching algorithm or spectral fingerprinting.

23. The system of claim 15, wherein the wearable device further comprises a reflective surface positioned to reflect at least a portion of light reflected from the tissue.

CERTIFICATE OF COMPLIANCE

I hereby certify that this brief complies with the type-volume limitations of 37 C.F.R. §42.24, because it contains 13,999 words (as determined by the Microsoft Word word-processing system used to prepare the brief), excluding the parts of the brief exempted by 37 C.F.R. §42.24.

Dated: January 22, 2021

Respectfully submitted,

/Jeffrey P. Kushan/
Jeffrey P. Kushan
Reg. No. 43,401
SIDLEY AUSTIN LLP
1501 K Street NW
Washington, DC 20005
Attorney for Petitioner

CERTIFICATE OF SERVICE

I hereby certify that on this 22nd day of January, 2021, copies of this Petition for *Inter Partes* Review, Attachments and Exhibits have been served in its entirety by Federal Express on the following counsel of record for Omni:

David Bir
Brooks, Kushman P.C./Cheetah
Omni MedSci
1000 Town Center
Twenty Second Floor
Southfield, MI 48075

Dr. Mohammed N. Islam
Omni MedSci, Inc.
1718 Newport Creek Drive,
Ann Arbor, Michigan 48103

Honigman LLP
c/o Sarah Waidelich
315 E Eisenhower Pkwy
Ann Arbor, MI 48108

Regents of Michigan
Office of Technology Transfer
c/o Richard Brandon
1600 Huron Pkwy, Building 520,
2nd Floor
Ann Arbor, MI 48109-2590

Thomas A. Lewry
John S. LeRoy
Robert C. Tuttle
John M. Halan
Christopher C. Smith
Brooks, Kushman P.C./Cheetah
Omni MedSci
1000 Town Center
Twenty Second Floor
Southfield, MI 48075

Dated: January 22, 2021

Respectfully submitted,

/Jeffrey P. Kushan/
Jeffrey P. Kushan
Reg. No. 43,401
SIDLEY AUSTIN LLP
1501 K Street NW
Washington, DC 20005
Attorney for Petitioner