Omni MedSci, Inc. v. Apple Inc.
Case No. 2:18-cv-134-RWS (E.D. Tex.)

DEFENDANT'S INVALIDITY CONTENTIONS
August 28, 2018

EXHIBIT N

EXHIBIT N-1

U.S. Patent No. 9,651,533 vs Carlson

Priority Date/Publication Date: March 3, 2005 Prior Art Status: §§ 102(a) and (b)

U.S. Appl. Pub. No. 2005/0049468 to Carlson et al. ("Carlson") anticipates the asserted claims of U.S. Patent No. 9,651,533 ("the '533 Patent") or renders those claims obvious alone and/or in view of at least any of the references identified in Apple's Obviousness Combinations Chart.

As set forth in Apple's Invalidity Contentions, the below contentions apply the prior art in part in accordance with Apple's assumption that Omni contends the claims are not invalid under 35 U.S.C. § 112. However, Apple's below contentions do not represent Apple's agreement or view as to the meaning, definiteness, written description support for, or enablement of any of the asserted claims. For each dependent claim, the disclosures cited for the claim from which it depends are incorporated by reference.

CHART ONE: U.S. Patent No. 9,651,533 vs Carlson

Asserted Claim of ’533 Patent	U.S. Appl. Pub. No. 2005/0049468 to Carlson et al. (“Carlson”)
[5] A measurement system, comprising:	To the extent the preamble is limiting, Carlson discloses and/or renders obvious “[a] measurement system.” “The invention relates in particular to optical pulsoximetry used for non-invasive measurement of pulsation and oxygen saturation in arterial human or animal blood, and is particularly concerned with increasing the technical performance of pulsoximetry in terms of quality and robustness of the measurement signal versus environmental disturbances and energy consumption.” Carlson at [0002]. *See* also Carlson at [0011]-[0013]
[5A] a light source comprising a plurality of semiconductor sources that are light emitting diodes, the light emitting diodes configured to generate an output optical beam with one or more optical wavelengths,	Carlson discloses and/or renders obvious “a light source comprising a plurality of semiconductor sources that are light emitting diodes, the light emitting diodes configured to generate an output optical beam with one or more optical wavelengths.” *See* CHART ONE: ’533 Patent, Claim Element 13A below.
[5B] wherein at least a portion of the one or more optical wavelengths is a near-infrared wavelength between 700 nanometers and 2500 nanometers,	Carlson discloses and/or renders obvious “wherein at least a portion of the one or more optical wavelengths is a near-infrared wavelength between 700 nanometers and 2500 nanometers.” “The light source is emitting light at two wavelengths, at 660 nm and a second wavelength within the range of 800 to 1000 nm, which means in the present case at 890 nm. Therefore, it is of course also possible to have two light emitting sources arranged, which means two LEDs.” Carlson at [0050]. “Human tissue scatters and transmits light in the visible and near infrared (NIR) wavelength range. Therefore, suppression of environmental optical radiation, e.g. sunlight, is difficult by geometric means of the architecture of the pulsoximeter sensor.” Carlson at [0006].

Asserted Claim of ’533 Patent	U.S. Appl. Pub. No. 2005/0049468 to Carlson et al. (“Carlson”)
	See also Carlson at [0003], [0055], [0056], [0062].
[5C] the light source configured to increase signal-to-noise ratio by increasing a light intensity from at least one of the plurality of semiconductor sources and by increasing a pulse rate of at least one of the plurality of semiconductor sources;	Carlson discloses and/or renders obvious “the light source configured to increase signal-to-noise ratio by increasing a light intensity from at least one of the plurality of semiconductor sources and by increasing a pulse rate of at least one of the plurality of semiconductor sources.” “As it is shown clearly in FIG. 4, using the beam shaping optics 21, the two initial light beams 8 are guided in form of bundled beams 12 to a relatively small area within the middle ear 2. By using the beam shaping optics 21, of course the influence of environmental light or noise, respectively, can be reduced substantially by increasing the S/B ratio. First of all, the light beam is bundled and, in addition, the optical signal power can be increased.” Carlson at [0054]. “It is therefore an object of the present invention to define optical and/or electronic means for increasing the Signal-to-Noise ratio (S/N) and Signal-to-Background ratio (S/B) of a pulsoximeter sensor for robust application of pulsoximetry in telemedicine- and near patient testing applications in rough (optical) environmental conditions, e.g. at changing light influences, such as sunlight, shadow, artificial light, etc.” Carlson at [0010]. Carlson at Fig. 4:

Asserted Claim of ’533 Patent	U.S. Appl. Pub. No. 2005/0049468 to Carlson et al. (“Carlson”)
	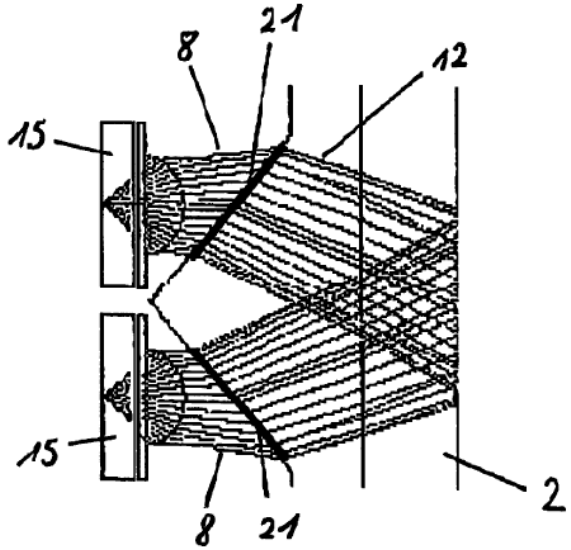 Figure 4 “As a consequence, it is therefore proposed to emit light by the LEDs not as current or continuous light but as pulsed light. The frequency is chosen in such a way that it is outside the frequency spectrum of sunlight and of ambient light which, according to FIG. 7 b, is in the range of above approximately 1000 Hz. Thus, the pulsoximeter signals are readily discriminated from electronic and parasitic contributions of environmental optical radiation outside the frequency fc+/−5 Hz increasing significantly the Signal-to-Noise and Signal-to-Background ratio. FIG. 8 shows the shift spectrum of signal to a region where there is little influence, e.g. of ambient light. F0 is the chosen frequency of the emitted light to operate the pulsoximeter sensor and the range between f0−5 Hz and f0+5 Hz is the consequence of the influence of the frequency due to physiological signal. Therefore, as shown in FIG. 8, the frequency spectrum of signal at the photo diode does have a basic signal contribution due to physiological signal. The signal contribution which is shown at the top of the signal contribution due to physiological signal and which is due to ambient light, is very small and as a consequence is approximately neglectable. Any noise or sunlight

Asserted Claim of ’533 Patent	U.S. Appl. Pub. No. 2005/0049468 to Carlson et al. (“Carlson”)
	within the range of 0 to 120 Hz, while the light beam for the pulsoximetric measurement is within the range of approximately f0−5 Hz to f0+5 Hz, will not influence the measurement of the pulsoximetric sensor. F0 could be e.g., as mentioned, 1000 Hz which of course is a frequency far outside of any indoor light source, as e.g. halogen light, conventional light, etc. f0 of course can be chosen at any other frequency, as e.g. 2000 Hz or even higher. By using light source modulation, it is even possible to use an additional filter removing a certain frequency spectrum. Looking e.g. at FIG. 9, it is possible to arrange a filter band pass 51 which is e.g. removing any frequencies in the range of 0 to 120 Hz. The respective filter is shown in form of the dashed line 51. As a result, we end up by a diagram according to FIG. 9 b only showing any measurements in the range of f0−5 Hz to f0+5 Hz.” Carlson at [0069]. *See also* Carlson at [0067]-[0068].
[5D] an apparatus comprising a plurality of lenses configured to receive a portion of the output optical beam and to deliver an analysis output beam to a sample	Carlson discloses and/or renders obvious “an apparatus comprising a plurality of lenses configured to receive a portion of the output optical beam and to deliver an analysis output beam to a sample.” “The basic idea therefore is to use a beam-shaping element, such as e.g. diffractive or refractive lenses, to direct the emitted optical radiation of, e.g., the LED light source into the human or animal tissue and the photon detecting element in order to increase the optical signal power, detected by the pulsoximeter sensor, and thus increasing the Signal-Noise – and signal/Background ratio.” Carlson at [0014]. Carlson at Fig. 4:

Asserted Claim of ’533 Patent	U.S. Appl. Pub. No. 2005/0049468 to Carlson et al. (“Carlson”)
	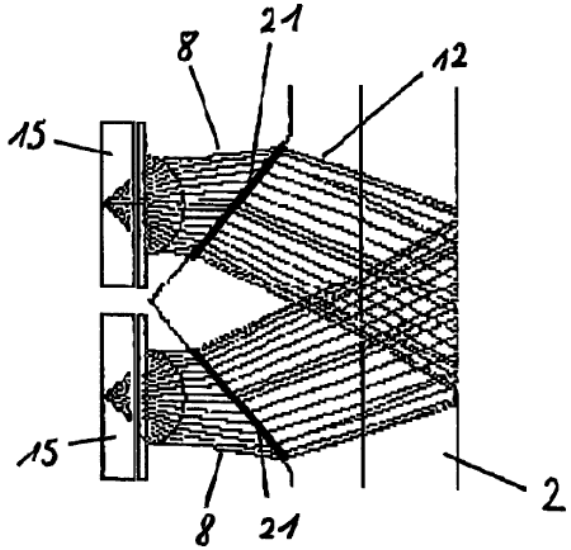 Figure 4 “Therefore, it is proposed, as shown in FIG. 4, to use beam shaping optics 20 to direct the emitted optical radiation 8 emitted from the two LEDs 15 to the middle of the earlobe. As it is shown clearly in FIG. 4, using the beam shaping optics 21, the two initial light beams 8 are guided in form of bundled beams 12 to a relatively small area within the middle ear 2. By using the beam shaping optics 21, of course the influence of environmental light or noise, respectively, can be reduced substantially by increasing the S/B ratio. First or all, the light beam is bundled and, in addition, the optical signal power can be increased.” Carlson at [0054]. “Furthermore, the above mentioned problem is solved according to the invention by means of methods according to the invention. Proposed is a method for monitoring e.g. pulsation frequency, oxygen saturation in blood or breathing frequency, which comprises at least one of the following steps:

Asserted Claim of ’533 Patent	U.S. Appl. Pub. No. 2005/0049468 to Carlson et al. (“Carlson”)
	measuring or monitoring medically relevant data of a person or an animal, such as in particular data, which describe the cardiovascular and pulmonary function and/or contain data regarding blood values or blood composition with the use of at least one measuring sensor, which sensor comprises at least one light source which can emit light at least at two wavelengths: direct the emitted light or optical radiation, respectively, by using a beam shaping element, such as e.g. a diffractive or refractive lens to the human or animal tissue; receiving and detecting the emitted and shaped light with at least one light receiving element for determining the light transmitted through the tissue portion of the person or the animal.” Carlson at [0022]-[0024]. “FIG. 6c an oximetric sensor in perspective view, containing optical lenses, filters and geometrical baffles.” Carlson at [0041]. Figur 6c 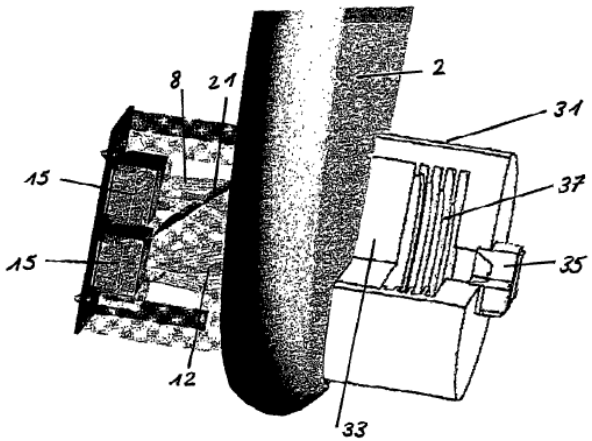

Asserted Claim of ’533 Patent	U.S. Appl. Pub. No. 2005/0049468 to Carlson et al. (“Carlson”)
	“Again, light is emitted from the two LEDs 15 and is shaped by the two beam shaping elements or lenses 21 to be guided as beams 12 through the earlobe 2.” Carlson at [0062].
[5E] a receiver configured to receive and process at least a portion of the analysis output beam reflected or transmitted from the sample and to generate an output signal,	Carlson discloses and/or renders obvious “a receiver configured to receive and process at least a portion of the analysis output beam reflected or transmitted from the sample and to generate an output signal.” “Proposed is a configuration for monitoring which comprises at least one of the following components: … at least one light source which can emit light at least at two wavelengths, as well as at least one light receiver for determining the light transmitted through a tissue portion of the person or the animal.” Carlson at [0011]-[0012]. “According to an alternative design of the sensor, it could also be possible to arrange the light receiver in such a way so that the light reflected through the earlobe is determined.” Carlson at [0052]. *See also* Carlson at [0016], [0019], [0050], [0075], Claims 1, 2, 5 and 9.
[5F] wherein the receiver is configured to be synchronized to the light source;	Carlson discloses and/or renders obvious “wherein the receiver is configured to be synchronized to the light source.” “Again, in addition to the above mentioned two configurations, or as an alternative, a further configuration is proposed which comprises at least the following components: at least one measuring sensor on the person or the animal for the acquisition or the monitoring of medically relevant data, such as in particular data, which describe the cardio vascular and pulmonary function and/or contained data regarding blood values or blood composition, which sensor comprises at least one light source which can emit light at least at two wavelengths, as well as at least one light receiver for determining the light transmitted through a tissue portion of the person, and at least one light source frequency modulating means to frequency modulate the optical radiation of the light source at a carrier frequency in order to shift the power spectrum of the pulsoximeter

Asserted Claim of ’533 Patent	U.S. Appl. Pub. No. 2005/0049468 to Carlson et al. (“Carlson”)
	signals. The basic idea of using AC-Coupling or Lock-In Amplification (synchronous detection), is to temporarily modulate the amplitude of the optical radiation of, e.g., the LED at a carrier frequency fc in order to shift the power spectrum of the pulsoximeter signals into a higher frequency range where environmental optical radiation is unlikely and electronic band pass filtering is technologically less stringent. Thus, the pulsoximeter signals are readily discriminated from electronic and parasitic contributions of environmental optical radiation outside the frequency range of, e.g. fc +/−5 Hz, increasing significantly the S/N (Signal/Noise)- and S/B ratio.” Carlson at [0018]. “At least one light source frequency modulating means to frequency modulate the optical radiation of the light source at a carrier frequency in order to shift the power spectrum of the pulsoximeter signals. The basic idea of using AC-Coupling or Lock-In Amplification (synchronous detection), is to temporarily modulate the amplitude of the optical radiation of, e.g., the LED at a carrier frequency Fc in order to shift the power spectrum of the pulsoximeter signals into a higher frequency range where environmental optical radiation is unlikely and electronic band pass filtering is technically less stringent.” Carlson at [0020]. “Again, in addition to the above mentioned two methods or as an alternative, it is further proposed to temporarily modulate the amplitude of the optical radiation of the light source by using e.g. AC-Coupling or Lock-In Amplification detection means. The basic idea of using AC-Coupling or Lock-In Amplification detection means is to temporarily modulate the optical radiation of, e.g., the LED at the carrier frequency Fc in order to shift the power spectrum of the pulsoximeter signals into a higher frequency range where an environmental optical radiation is unlikely and electronic band pass filtering is technologically less stringent.” Carlson at [0027]. “As a consequence, it is therefore proposed to emit light by the LEDs not as current or continuous light but as pulsed light. The frequency is chosen in such a way that it is outside the frequency spectrum of sunlight and of ambient light which, according to FIG. 7 b, is in the range of above approximately 1000 Hz. Thus, the pulsoximeter signals are readily discriminated from electronic and parasitic contributions of environmental optical radiation outside the frequency fc+/−5 Hz increasing significantly the Signal-to-Noise and Signal-to-Background ratio. FIG. 8 shows the shift spectrum of signal to a region where there is little influence, e.g. of ambient light. F0 is the

Asserted Claim of ’533 Patent	U.S. Appl. Pub. No. 2005/0049468 to Carlson et al. (“Carlson”)
	chosen frequency of the emitted light to operate the pulsoximeter sensor and the range between f0−5 Hz and f0+5 Hz is the consequence of the influence of the frequency due to physiological signal. Therefore, as shown in FIG. 8, the frequency spectrum of signal at the photo diode does have a basic signal contribution due to physiological signal. The signal contribution which is shown at the top of the signal contribution due to physiological signal and which is due to ambient light, is very small and as a consequence is approximately neglectable. Any noise or sunlight within the range of 0 to 120 Hz, while the light beam for the pulsoximetric measurement is within the range of approximately f0−5 Hz to f0+5 Hz, will not influence the measurement of the pulsoximetric sensor. F0 could be e.g., as mentioned, 1000 Hz which of course is a frequency far outside of any indoor light source, as e.g. halogen light, conventional light, etc. f0 of course can be chosen at any other frequency, as e.g. 2000 Hz or even higher. By using light source modulation, it is even possible to use an additional filter removing a certain frequency spectrum. Looking e.g. at FIG. 9, it is possible to arrange a filter band pass 51 which is e.g. removing any frequencies in the range of 0 to 120 Hz. The respective filter is shown in form of the dashed line 51. As a result, we end up by a diagram according to FIG. 9 b only showing any measurements in the range of f0−5 Hz to f0+5 Hz.” Carlson at [0069]. “Finally, after the measurements with pulse light have been executed, of course a reversed phase shifting or modulation has to be executed to calculate the real values of the Pulsoximetric measurement. Again, this reverse face shifting on modulation according to Lock-In technique is known out of the state of the art.” Carlson at [0070]. *See also* Carlson at [0065].
[5G] a personal device comprising a wireless receiver, a wireless transmitter, a display, a microphone, a speaker, one or more buttons or knobs, a microprocessor and a touch screen,	Carlson discloses and/or renders obvious “a personal device comprising a wireless receiver, a wireless transmitter, a display, a microphone, a speaker, one or more buttons or knobs, a microprocessor and a touch screen.” “The measured values can be transmitted via a wire connection or wireless, e.g. within the range of radio frequency. Well known these days is wireless transmission using ‘Bluetooth’ technology.” Carlson at [0077].

Asserted Claim of ’533 Patent	U.S. Appl. Pub. No. 2005/0049468 to Carlson et al. (“Carlson”)
[5H] the personal device configured to receive and process at least a portion of the output signal,	Carlson discloses and/or renders obvious “the personal device configured to receive and process at least a portion of the output signal.” “The measured values can be transmitted via a wire connection or wireless, e.g. within the range of radio frequency. Well known these days is wireless transmission using ‘Bluetooth’ technology.” Carlson at [0077].
[5I] wherein the personal device is configured to store and display the processed output signal,	Carlson discloses and/or renders obvious “wherein the personal device is configured to store and display the processed output signal.” “The measured values can be transmitted via a wire connection or wireless, e.g. within the range of radio frequency. Well known these days is wireless transmission using ‘Bluetooth’ technology.” Carlson at [0077]. “Taking prior art into consideration, the measured values can be monitored at a special unit worn by the person or patient, respectively, where e.g. a signal is generated, if the measured value is not within a predetermined range. In other words, health problems could be detected and an alarm signal could be generated which can be transmitted to a respective person, to a medical doctor, to a hospital, etc. so that help can be organised. Furthermore, it is possible to include e.g. a so-called GPS device which at any time gives the location of the person using the pulsoximetric sensor monitoring configuration.” Carlson at [0078].
[5J] and wherein at least a portion of the processed output signal is configured to be transmitted over a wireless transmission link; and	Carlson discloses and/or renders obvious “and wherein at least a portion of the processed output signal is configured to be transmitted over a wireless transmission link.” “The measured values can be transmitted via a wire connection or wireless, e.g. within the range of radio frequency. Well known these days is wireless transmission using ‘Bluetooth’ technology.” Carlson at [0077]. “Taking prior art into consideration, the measured values can be monitored at a special unit worn by the person or patient, respectively, where e.g. a signal is generated, if the measured value is not within a predetermined range. In other words, health problems could be detected and an alarm signal could be generated which can be transmitted to a respective person, to a medical doctor, to a hospital, etc. so that help can be organised. Furthermore, it is possible to include e.g. a so-called

Asserted Claim of ’533 Patent	U.S. Appl. Pub. No. 2005/0049468 to Carlson et al. (“Carlson”)
	GPS device which at any time gives the location of the person using the pulsoximetric sensor monitoring configuration.” Carlson at [0078].
[5K] a remote device configured to receive over the wireless transmission link an output status comprising the at least a portion of the processed output signal, to process the received output status to generate processed data and to store the processed data.	Carlson discloses and/or renders obvious “a remote device configured to receive over the wireless transmission link an output status comprising the at least a portion of the processed output signal, to process the received output status to generate processed data and to store the processed data.” “The measured values can be transmitted via a wire connection or wireless, e.g. within the range of radio frequency. Well known these days is wireless transmission using ‘Bluetooth’ technology.” Carlson at [0077]. “Taking prior art into consideration, the measured values can be monitored at a special unit worn by the person or patient, respectively, where e.g. a signal is generated, if the measured value is not within a predetermined range. In other words, health problems could be detected and an alarm signal could be generated which can be transmitted to a respective person, to a medical doctor, to a hospital, etc. so that help can be organised. Furthermore, it is possible to include e.g. a so-called GPS device which at any time gives the location of the person using the pulsoximetric sensor monitoring configuration.” Carlson at [0078].
[7] The system of claim 5, wherein the remote device is further configured to transmit at least a portion of the processed data to one or more other locations, wherein the one or more other locations is selected from the group consisting of the personal device, a doctor, a healthcare provider, a cloud-based server and one or more designated recipients, and wherein the remote device is capable of transmitting	Carlson discloses and/or renders obvious “[t]he system of claim 5, wherein the remote device is further configured to transmit at least a portion of the processed data to one or more other locations, wherein the one or more other locations is selected from the group consisting of the personal device, a doctor, a healthcare provider, a cloud-based server and one or more designated recipients, and wherein the remote device is capable of transmitting information related to a time and a position associated with the at least a portion of the processed data.” “The measured values can be transmitted via a wire connection or wireless, e.g. within the range of radio frequency. Well known these days is wireless transmission using ‘Bluetooth’ technology.” Carlson at [0077]. “Taking prior art into consideration, the measured values can be monitored at a special unit worn by the person or patient, respectively, where e.g. a signal is generated, if the measured value is not within a predetermined range. In other words, health problems could be detected and an alarm signal could be generated which can be transmitted to a respective person, to a medical doctor, to a

Asserted Claim of ’533 Patent	U.S. Appl. Pub. No. 2005/0049468 to Carlson et al. (“Carlson”)
information related to a time and a position associated with the at least a portion of the processed data.	hospital, etc. so that help can be organised. Furthermore, it is possible to include e.g. a so-called GPS device which at any time gives the location of the person using the pulsoximetric sensor monitoring configuration.” Carlson at [0078].
[8] The system of claim 5, wherein the receiver is located a first distance from a first one of the plurality of light emitting diodes and a different, second distance from a second one of the plurality of light emitting diodes such that the receiver receives a first signal from the first light emitting diode and a second signal from the second light emitting diode.	Carlson discloses and/or renders obvious “[t]he system of claim 5, wherein the receiver is located a first distance from a first one of the plurality of light emitting diodes and a different, second distance from a second one of the plurality of light emitting diodes such that the receiver receives a first signal from the first light emitting diode and a second signal from the second light emitting diode.” “Of course, the sensor can also be arranged at other parts of the human body, such as e.g. at a finger or a toe. In addition, the monitoring can also be executed at animals, which means that pulsoximetric sensors can also be arranged e.g. at the ear of animals, such as e.g. cows. According to an alternative design of the sensor, it could also be possible to arrange the light receiver in such a way so that the light reflected through the earlobe is determined. Again, according to a further alternative, it could even be possible by arranging at least two light receivers to determine the light transmitted through the earlobe and the light reflected by the earlobe.” Carlson at [0052]. “Coming back to the fixing system, which means a clip as shown in FIGS. 1 and 2, it has to be mentioned that when using a clip for fixing a pulsoximetric sensor, problems could occur due to strong movements of the human or animal individual or due to swelling or contracting of the human or animal tissue during the measurement with the pulsoximetric sensor. In other words, if e.g. an earlobe of an ear 2, as shown in FIG. 2, would swell, than the distance between the LED 15 and the photo detector 11 would increase and, what is even more critical, the beam path could divert substantially from the optical axis of the LED and the photo detector. Therefore, it is preferred to further provide means for stabilizing the signal guiding and detecting and to provide means for the beam path to be co-linear with the optical axis of the LED and the photo detector. Because of that, according to FIGS. 10 a and 10 b, it is proposed to use a frame 61 which is stable and does not change its dimensions due to strong movements or an individual carrying the pulsoximetric sensor or due to swelling or contracting of the tissue to be monitored by the pulsoximetric sensor. In this case, of course, other means have to be provided, so that the distance between the LED 15 and the photo detector 11 can be adjusted or adapted to the thickness of the

Asserted Claim of ’533 Patent	U.S. Appl. Pub. No. 2005/0049468 to Carlson et al. (“Carlson”)
	tissue to be monitored. Therefore, according to FIG. 10 a, it is proposed that the LED 15 is arranged within a clamping mechanism 63 and that between the clamping mechanism 63 and the LED a screw connection 65 is arranged, so that the LED 15 can be moved into the clamping mechanism or out of the clamping mechanism 63. In other words, the distance between the LED 15 and the photo detector 11 can be adjusted along the optical axis 67 which guarantees that the beam path has always been co-linear with the optical axis 67 of the LED and the photo detector.” Carlson at [0073]. “Coming back to the fixing system, which means a clip as shown in FIGS. 1 and 2, it has to be mentioned that when using a clip for fixing a pulsoximetric sensor, problems could occur due to strong movements of the human or animal individual or due to swelling or contracting of the human or animal tissue during the measurement with the pulsoximetric sensor. In other words, if e.g. an earlobe of an ear 2, as shown in FIG. 2, would swell, than the distance between the LED 15 and the photo detector 11 would increase and, what is even more critical, the beam path could divert substantially from the optical axis of the LED and the photo detector. Therefore, it is preferred to further provide means for stabilizing the signal guiding and detecting and to provide means for the beam path to be co-linear with the optical axis of the LED and the photo detector. Because of that, according to FIGS. 10 a and 10 b, it is proposed to use a frame 61 which is stable and does not change its dimensions due to strong movements or an individual carrying the pulsoximetric sensor or due to swelling or contracting of the tissue to be monitored by the pulsoximetric sensor. In this case, of course, other means have to be provided, so that the distance between the LED 15 and the photo detector 11 can be adjusted or adapted to the thickness of the tissue to be monitored. Therefore, according to FIG. 10 a, it is proposed that the LED 15 is arranged within a clamping mechanism 63 and that between the clamping mechanism 63 and the LED a screw connection 65 is arranged, so that the LED 15 can be moved into the clamping mechanism or out of the clamping mechanism 63. In other words, the distance between the LED 15 and the photo detector 11 can be adjusted along the optical axis 67 which guarantees that the beam path has always been co-linear with the optical axis 67 of the LED and the photo detector.” Carlson at [0075].

Asserted Claim of ’533 Patent	U.S. Appl. Pub. No. 2005/0049468 to Carlson et al. (“Carlson”)
[9] The system of claim 5, wherein the output signal is generated in part by comparing the first and second signals	Carlson discloses and/or renders obvious “[t]he system of claim 5, wherein the output signal is generated in part by comparing the first and second signals.” “Of course, the sensor can also be arranged at other parts of the human body, such as e.g. at a finger or a toe. In addition, the monitoring can also be executed at animals, which means that pulsoximetric sensors can also be arranged e.g. at the ear of animals, such as e.g. cows. According to an alternative design of the sensor, it could also be possible to arrange the light receiver in such a way so that the light reflected through the earlobe is determined. Again, according to a further alternative, it could even be possible by arranging at least two light receivers to determine the light transmitted through the earlobe and the light reflected by the earlobe.” Carlson at [0052]. “Coming back to the fixing system, which means a clip as shown in FIGS. 1 and 2, it has to be mentioned that when using a clip for fixing a pulsoximetric sensor, problems could occur due to strong movements of the human or animal individual or due to swelling or contracting of the human or animal tissue during the measurement with the pulsoximetric sensor. In other words, if e.g. an earlobe of an ear 2, as shown in FIG. 2, would swell, than the distance between the LED 15 and the photo detector 11 would increase and, what is even more critical, the beam path could divert substantially from the optical axis of the LED and the photo detector. Therefore, it is preferred to further provide means for stabilizing the signal guiding and detecting and to provide means for the beam path to be co-linear with the optical axis of the LED and the photo detector. Because of that, according to FIGS. 10 a and 10 b, it is proposed to use a frame 61 which is stable and does not change its dimensions due to strong movements or an individual carrying the pulsoximetric sensor or due to swelling or contracting of the tissue to be monitored by the pulsoximetric sensor. In this case, of course, other means have to be provided, so that the distance between the LED 15 and the photo detector 11 can be adjusted or adapted to the thickness of the tissue to be monitored. Therefore, according to FIG. 10 a, it is proposed that the LED 15 is arranged within a clamping mechanism 63 and that between the clamping mechanism 63 and the LED a screw connection 65 is arranged, so that the LED 15 can be moved into the clamping mechanism or out of the clamping mechanism 63. In other words, the distance between the LED 15 and the photo detector 11 can be adjusted along the optical axis 67 which guarantees that the beam path has always been co-linear with the optical axis 67 of the LED and the photo detector.” Carlson at [0073].

Asserted Claim of ’533 Patent	U.S. Appl. Pub. No. 2005/0049468 to Carlson et al. (“Carlson”)
	“Coming back to the fixing system, which means a clip as shown in FIGS. 1 and 2, it has to be mentioned that when using a clip for fixing a pulsoximetric sensor, problems could occur due to strong movements of the human or animal individual or due to swelling or contracting of the human or animal tissue during the measurement with the pulsoximetric sensor. In other words, if e.g. an earlobe of an ear 2, as shown in FIG. 2, would swell, than the distance between the LED 15 and the photo detector 11 would increase and, what is even more critical, the beam path could divert substantially from the optical axis of the LED and the photo detector. Therefore, it is preferred to further provide means for stabilizing the signal guiding and detecting and to provide means for the beam path to be co-linear with the optical axis of the LED and the photo detector. Because of that, according to FIGS. 10 a and 10 b, it is proposed to use a frame 61 which is stable and does not change its dimensions due to strong movements or an individual carrying the pulsoximetric sensor or due to swelling or contracting of the tissue to be monitored by the pulsoximetric sensor. In this case, of course, other means have to be provided, so that the distance between the LED 15 and the photo detector 11 can be adjusted or adapted to the thickness of the tissue to be monitored. Therefore, according to FIG. 10 a, it is proposed that the LED 15 is arranged within a clamping mechanism 63 and that between the clamping mechanism 63 and the LED a screw connection 65 is arranged, so that the LED 15 can be moved into the clamping mechanism or out of the clamping mechanism 63. In other words, the distance between the LED 15 and the photo detector 11 can be adjusted along the optical axis 67 which guarantees that the beam path has always been co-linear with the optical axis 67 of the LED and the photo detector.” Carlson at [0075].
[10] The system of claim 5, wherein the output signal comprises one or more physiological parameters, and the remote device is capable of storing a history of at least a portion of the one or more physiological parameters over a specified period of time.	Carlson discloses and/or renders obvious “[t]he system of claim 5, wherein the output signal comprises one or more physiological parameters, and the remote device is capable of storing a history of at least a portion of the one or more physiological parameters over a specified period of time.” “Within the main unit 7 the measured values can be compared with reference values being representative for a certain health status of the person to be surveyed.” Carlson at [0051].

Asserted Claim of ’533 Patent	U.S. Appl. Pub. No. 2005/0049468 to Carlson et al. (“Carlson”)
	“The measured values can be transmitted via a wire connection or wireless, e.g. within the range of radio frequency. Well known these days is wireless transmission using ‘Bluetooth’ technology.” Carlson at [0077]. “Taking prior art into consideration, the measured values can be monitored at a special unit worn by the person or patient, respectively, where e.g. a signal is generated, if the measured value is not within a predetermined range. In other words, health problems could be detected and an alarm signal could be generated which can be transmitted to a respective person, to a medical doctor, to a hospital, etc. so that help can be organised. Furthermore, it is possible to include e.g. a so-called GPS device which at any time gives the location of the person using the pulsoximetric sensor monitoring configuration.” Carlson at [0078].
[13] A measurement system comprising	To the extent the preamble is limiting, Carlson discloses and/or renders obvious “a measurement system.” *See* CHART ONE: ’533 Patent, Claim Element 5 above.
[13A] a wearable measurement device for measuring one or more physiological parameters, including a light source comprising a plurality of semiconductor sources that are light emitting diodes, the light emitting diodes configured to generate an output optical beam with one or more optical wavelengths,	Carlson discloses and/or renders obvious “a wearable measurement device for measuring one or more physiological parameters, including a light source comprising a plurality of semiconductor sources that are light emitting diodes, the light emitting diodes configured to generate an output optical beam with one or more optical wavelengths.” “FIG. 1 shows schematically the arrangement of an ear sensor 1 which can be arranged in form of an ear clip. This sensor 1 can be arranged e.g. at an earlobe of ear 2. Furthermore, the sensor or ear clip is connected via a wire 3 and the connection 5 with the main unit 7 including e.g. a power source, like a battery, and measuring and/or monitoring electronics.” Carlson at [0048]. “In FIG. 2, the ear clip 1 is shown in cross section where it can specifically be seen that the sensor is designed in form on a clip 13. The sensor or ear clip 13 furthermore includes a light source 15 which emits a light beam 8 to a light receiver 11. The light is guided or emitted through the ear skin or earlobe 2.” Carlson at [0049]. “The light source is emitting light at two wavelengths, at 660 nm and a second wavelength within the range of 800 to 1000 nm, which means in the present case at 890 nm. Therefore, it is of course

Asserted Claim of ’533 Patent	U.S. Appl. Pub. No. 2005/0049468 to Carlson et al. (“Carlson”)
	also possible to have two light emitting sources arranged, which means two LEDs.” Carlson at [0050]. “Therefore, it is proposed, as shown in FIG. 4, to use beam shaping optics 20 to direct the emitted optical radiation 8 emitted from the two LEDs 15 to the middle of the earlobe.” Carlson at [0054]. “Comparing the clip mechanism according to FIGS. 1 and 2 and the frame 61 as shown in FIG. 10a, it is obvious that in using a frame it is not easy to arrange or remove the pulsoximetric sensor to or from an earlobe of an ear, if required, e.g. if a person wearing the pulsoximetric sensor is taking a bath, a shower, etc. Therefore, it is proposed, as shown schematically in FIG. 10b, to use a snap-in mechanism 71, which means that the champ mechanism 63 holding the LED 15 can be rotated e.g. in direction of dashed line 73 around an axis 69 and removed from the frame 61 or vice versa can be arranged at the frame 61 by arranging within the axis 69 and within the snap mechanism 71.” Carlson at [0074]. “The measured values can be transmitted via a wire connection or wireless, e.g. within the range of radio frequency. Well known these days is wireless transmission using “Bluetooth” technology. According to a further embodiment, the pulsoximetric sensor could be included within a hearing aid device.” Carlson at [0077]. “Taking prior art into consideration, the measured values can be monitored at a special unit worn by the person or patient, respectively, where e.g. a signal is generated, if the measured value is not within the predetermined range.” Carlson at [0078]. See also Fig. 4, [0003], [0055], [0056], [0062], [0075]

Asserted Claim of ’533 Patent	U.S. Appl. Pub. No. 2005/0049468 to Carlson et al. (“Carlson”)
	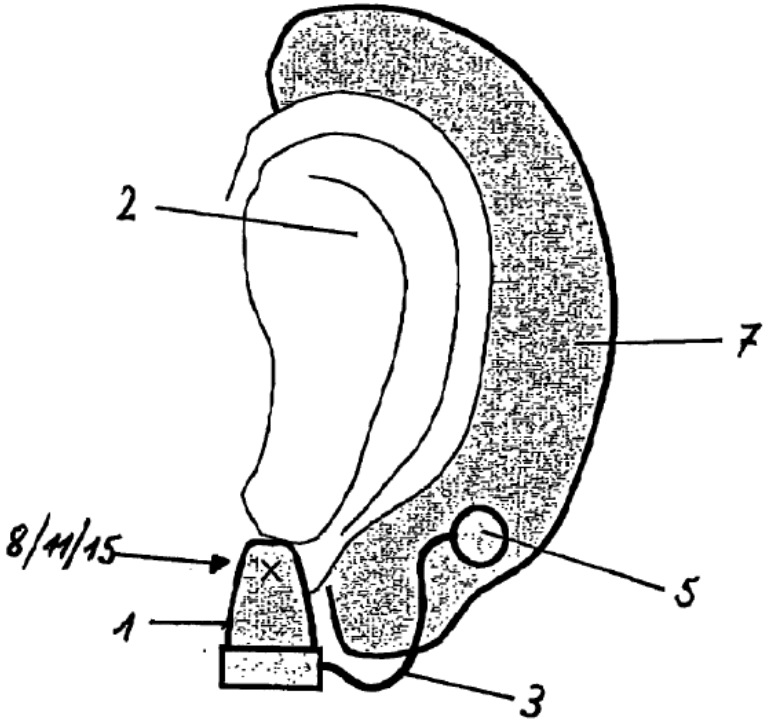 Figure 1

Asserted Claim of ’533 Patent	U.S. Appl. Pub. No. 2005/0049468 to Carlson et al. (“Carlson”)
	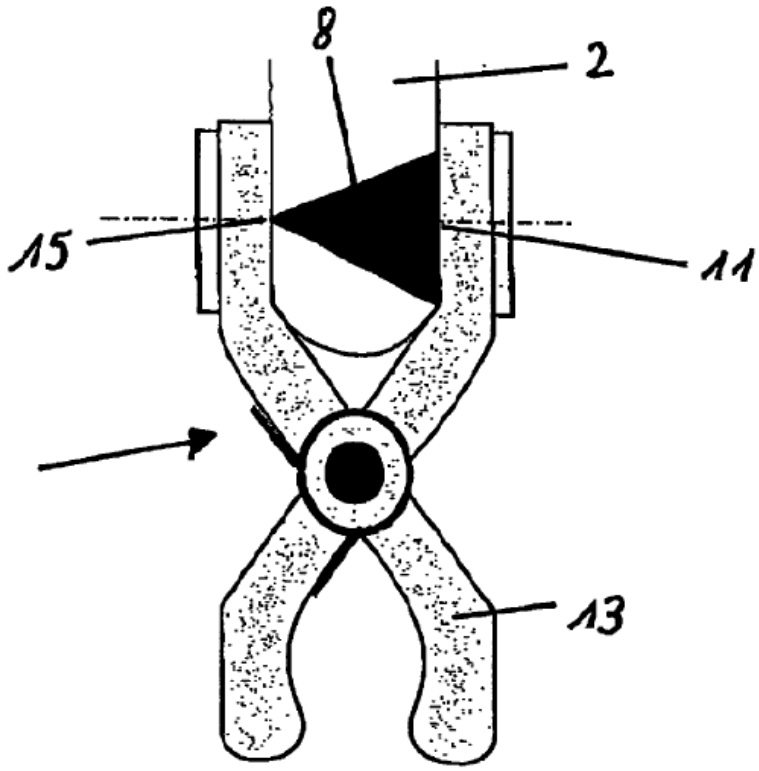 Figure 2
[13B] wherein at least a portion of the one or more optical wavelengths is a near-infrared	Carlson discloses and/or renders obvious “wherein at least a portion of the one or more optical wavelengths is a near-infrared wavelength between 700 nanometers and 2500 nanometers.”

Asserted Claim of ’533 Patent	U.S. Appl. Pub. No. 2005/0049468 to Carlson et al. (“Carlson”)
wavelength between 700 nanometers and 2500 nanometers,	*See* CHART ONE: ’533 Patent, Claim Element 5B above.
[13C] the light source configured to increase signal-to-noise ratio by increasing a light intensity from at least one of the plurality of semiconductor sources and by increasing a pulse rate of at least one of the plurality of semiconductor sources;	Carlson discloses and/or renders obvious “the light source configured to increase signal-to-noise ratio by increasing a light intensity from at least one of the plurality of semiconductor sources and by increasing a pulse rate of at least one of the plurality of semiconductor sources.” *See* CHART ONE: ’533 Patent, Claim Element 5C above.
[13D] the wearable measurement device comprising a plurality of lenses configured to receive a portion of the output optical beam and to deliver an analysis output beam to a sample;	Carlson discloses and/or renders obvious “the wearable measurement device comprising a plurality of lenses configured to receive a portion of the output optical beam and to deliver an analysis output beam to a sample.” *See* CHART ONE: ’533 Patent, Claim Element 5D above.
[13E] the wearable measurement device further comprising a receiver configured to receive and process at least a portion of the analysis output beam reflected or transmitted from the sample and to generate an output signal	Carlson discloses and/or renders obvious “the wearable measurement device further comprising a receiver configured to receive and process at least a portion of the analysis output beam reflected or transmitted from the sample and to generate an output signal.” *See* CHART ONE: ’533 Patent, Claim Element 5E above.
[13F] wherein the wearable measurement device receiver is configured to be synchronized to pulses of the light source;	Carlson discloses and/or renders obvious “wherein the wearable measurement device receiver is configured to be synchronized to pulses of the light source.” *See* CHART ONE: ’533 Patent, Claim Element 5F above.

Asserted Claim of ’533 Patent	U.S. Appl. Pub. No. 2005/0049468 to Carlson et al. (“Carlson”)
[13G] a personal device comprising a wireless receiver, a wireless transmitter, a display, a microphone, a speaker, one or more buttons or knobs, a microprocessor and a touch screen,	Carlson discloses and/or renders obvious “a personal device comprising a wireless receiver, a wireless transmitter, a display, a microphone, a speaker, one or more buttons or knobs, a microprocessor and a touch screen.” *See* CHART ONE: ’533 Patent, Claim Element 5G above.
[13H] the personal device configured to receive and process at least a portion of the output signal,	Carlson discloses and/or renders obvious “the personal device configured to receive and process at least a portion of the output signal, wherein the personal device is configured to store and display the processed output signal.” *See* CHART ONE: ’533 Patent, Claim Element 5H above.
[13I] wherein the personal device is configured to store and display the processed output signal, and	Carlson discloses and/or renders obvious “wherein the personal device is configured to store and display the processed output signal.” *See* CHART ONE: ’533 Patent, Claim Element 5I above.
[13J] wherein at least a portion of the processed output signal is configured to be transmitted over a wireless transmission link; and	Carlson discloses and/or renders obvious “wherein at least a portion of the processed output signal is configured to be transmitted over a wireless transmission link.” *See* CHART ONE: ’533 Patent, Claim Element 5J above.
[13K] a remote device configured to receive over the wireless transmission link an output status comprising the at least a portion of the processed output signal, to process the received output status to generate processed data and to store the processed data, and	Carlson discloses and/or renders obvious “a remote device configured to receive over the wireless transmission link an output status comprising the at least a portion of the processed output signal, to process the received output status to generate processed data and to store the processed data.” *See* CHART ONE: ’533 Patent, Claim Element 5K above.

Asserted Claim of ’533 Patent	U.S. Appl. Pub. No. 2005/0049468 to Carlson et al. (“Carlson”)
[13L] wherein the remote device is capable of storing a history of at least a portion of the received output status over a specified period of time.	Carlson discloses and/or renders obvious “wherein the remote device is capable of storing a history of at least a portion of the received output status over a specified period of time.” *See* CHART ONE: ’533 Patent, Claim Element 10 above.
[16] The system of claim 13, wherein the receiver is located a first distance from a first one of the plurality of light emitting diodes and a different, second distance from a second one of the plurality of light emitting diodes such that the receiver receives a first signal from the first light emitting diode and a second signal from the second light emitting diode.	Carlson discloses and/or renders obvious “[t]he system of claim 13, wherein the receiver is located a first distance from a first one of the plurality of light emitting diodes and a different, second distance from a second one of the plurality of light emitting diodes such that the receiver receives a first signal from the first light emitting diode and a second signal from the second light emitting diode.” *See* CHART ONE: ’533 Patent, Claim Element 8 above.
[17] The system of claim 16, wherein the output signal is generated in part by comparing the first and second signals.	Carlson discloses and/or renders obvious “[t]he system of claim 16, wherein the output signal is generated in part by comparing the first and second signals.” *See* CHART ONE: ’533 Patent, Claim Element 9 above.

EXHIBIT N-2

U.S. Patent No. 9,757,040 vs Carlson

Priority Date/Publication Date: March 3, 2005 Prior Art Status: §§ 102(a) and (b)

U.S. Appl. Pub. No. 2005/0049468 to Carlson et al. ("Carlson") anticipates the asserted claims of U.S. Patent No. 9,757,040 ("the '040 Patent") or renders those claims obvious alone and/or in view of at least any of the references identified in Apple's Obviousness Combinations Chart.

As set forth in Apple's Invalidity Contentions, the below contentions apply the prior art in part in accordance with Apple's assumption that Omni contends the claims are not invalid under 35 U.S.C. § 112. However, Apple's below contentions do not represent Apple's agreement or view as to the meaning, definiteness, written description support for, or enablement of any of the asserted claims. For each dependent claim, the disclosures cited for the claim from which it depends are incorporated by reference.

CHART TWO: U.S. Patent No. 9,757,040 vs Carlson

Asserted Claim of ’040 Patent	U.S. Appl. Pub. No. 2005/0049468 to Carlson et al. (“Carlson”)
[1] A wearable device for use with a smart phone or tablet, the wearable device comprising:	To the extent the preamble is limiting, Carlson discloses and/or renders obvious “[a] wearable device for use with a smart phone or tablet.” *See* CHART ONE: ’533 Patent, Claim Elements 5, 5G, and 13A above.
[1A] a measurement device including a light source comprising a plurality of light emitting diodes (LEDs) for measuring one or more physiological parameters	Carlson discloses and/or renders obvious “a measurement device including a light source comprising a plurality of light emitting diodes (LEDs) for measuring one or more physiological parameters.” *See* CHART ONE: ’533 Patent, Claim Element 13A above.
[1B] the measurement device configured to generate, by modulating at least one of the LEDs having an initial light intensity, an input optical beam having one or more optical wavelengths,	Carlson discloses and/or renders obvious “the measurement device configured to generate, by modulating at least one of the LEDs having an initial light intensity, an input optical beam having one or more optical wavelengths.” “At least one light source frequency modulating means to frequency modulate the optical radiation of the light source at a carrier frequency in order to shift the power spectrum of the pulsoximeter signals. The basic idea of using AC-Coupling or Lock-In Amplification (synchronous detection), is to temporarily modulate the amplitude of the optical radiation of, e.g., the LED at a carrier frequency Fc in order to shift the power spectrum of the pulsoximeter signals into a higher frequency range where environmental optical radiation is unlikely and electronic band pass filtering is technically less stringent.” Carlson at [0020]. “Again, in addition to the above mentioned two methods or as an alternative, it is further proposed to temporarily modulate the amplitude of the optical radiation of the light source by using e.g. AC-Coupling or Lock-In Amplification detection means. The basic idea of using AC-Coupling or Lock-In Amplification detection means is to temporarily modulate the optical radiation of, e.g., the LED at the carrier frequency Fc in order to shift the power spectrum of the pulsoximeter

Asserted Claim of ’040 Patent	U.S. Appl. Pub. No. 2005/0049468 to Carlson et al. (“Carlson”)
	signals into a higher frequency range where an environmental optical radiation is unlikely and electronic band pass filtering is technologically less stringent.” Carlson at [0027]. “As a consequence, it is therefore proposed to emit light by the LEDs not as current or continuous light but as pulsed light. The frequency is chosen in such a way that it is outside the frequency spectrum of sunlight and of ambient light which, according to FIG. 7 b, is in the range of above approximately 1000 Hz. Thus, the pulsoximeter signals are readily discriminated from electronic and parasitic contributions of environmental optical radiation outside the frequency fc+/−5 Hz increasing significantly the Signal-to-Noise and Signal-to-Background ratio. FIG. 8 shows the shift spectrum of signal to a region where there is little influence, e.g. of ambient light. F0 is the chosen frequency of the emitted light to operate the pulsoximeter sensor and the range between f0−5 Hz and f0+5 Hz is the consequence of the influence of the frequency due to physiological signal. Therefore, as shown in FIG. 8, the frequency spectrum of signal at the photo diode does have a basic signal contribution due to physiological signal. The signal contribution which is shown at the top of the signal contribution due to physiological signal and which is due to ambient light, is very small and as a consequence is approximately neglectable. Any noise or sunlight within the range of 0 to 120 Hz, while the light beam for the pulsoximetric measurement is within the range of approximately f0−5 Hz to f0+5 Hz, will not influence the measurement of the pulsoximetric sensor. F0 could be e.g., as mentioned, 1000 Hz which of course is a frequency far outside of any indoor light source, as e.g. halogen light, conventional light, etc. f0 of course can be chosen at any other frequency, as e.g. 2000 Hz or even higher. By using light source modulation, it is even possible to use an additional filter removing a certain frequency spectrum. Looking e.g. at FIG. 9, it is possible to arrange a filter band pass 51 which is e.g. removing any frequencies in the range of 0 to 120 Hz. The respective filter is shown in form of the dashed line 51. As a result, we end up by a diagram according to FIG. 9 b only showing any measurements in the range of f0−5 Hz to f0+5 Hz.” Carlson at [0069]. “Finally, after the measurements with pulse light have been executed, of course a reversed phase shifting or modulation has to be executed to calculate the real values of the Pulsoximetric measurement. Again, this reverse face shifting on modulation according to Lock-In technique is known out of the state of the art.” Carlson at [0070].

Asserted Claim of ’040 Patent	U.S. Appl. Pub. No. 2005/0049468 to Carlson et al. (“Carlson”)
[1C] wherein at least a portion of the one or more optical wavelengths is a near-infrared wavelength between 700 nanometers and 2500 nanometers;	Carlson discloses and/or renders obvious “wherein at least a portion of the one or more optical wavelengths is a near-infrared wavelength between 700 nanometers and 2500 nanometers.” *See* CHART ONE: ’533 Patent, Claim Element 5B above.
[1D] the measurement device comprising one or more lenses configured to receive and to deliver a portion of the input optical beam to tissue, wherein the tissue reflects at least a portion of the input optical beam delivered to the tissue;	Carlson discloses and/or renders obvious “the measurement device comprising one or more lenses configured to receive and to deliver a portion of the input optical beam to tissue, wherein the tissue reflects at least a portion of the input optical beam delivered to the tissue.” *See* CHART ONE: ’533 Patent, Claim Element 5D above.
[1E] the measurement device further comprising a reflective surface configured to receive and redirect at least a portion of light reflected from the tissue;	Carlson discloses and/or renders obvious “the measurement device further comprising a reflective surface configured to receive and redirect at least a portion of light reflected from the tissue.” “In addition to the above mentioned configuration or as an alternative, it is proposed to use a configuration for monitoring e.g. pulsation frequency, oxygen saturation within blood and breathing frequency which comprises at least the following components: at least one measuring sensor to the person or the animal for the acquisition or monitoring of medically relevant data which sensor comprises at least one light source that can emit light at least at two wavelengths, as well as at least one light receiver for determining the light transmission through a tissue portion of the person or the animal, and at least one light baffle or light trap, respectively, and/or an optical wavelength filter which is adapted to the power spectrum of the light source and the absorption spectrum of human or animal arterial blood. The basic idea of using geometric baffles or light traps, respectively, and/or optical wavelength filters is to suppress by geometric and/or optical means the parasitic contribution of environmental radiation in order to increase or stabilize the S/B (Signal/Background) ratio vs.

Asserted Claim of ’040 Patent	U.S. Appl. Pub. No. 2005/0049468 to Carlson et al. (“Carlson”)
	environmental conditions. The increase of the S/B ratio is e.g. estimated to a factor 10-100.” Carlson at [0015]. “In addition to the mentioned method or as alternative, it is further proposed to filter the emitted light by using geometrical baffles or light traps, respectively, and/or optical wavelength filters to suppress by geometric and/or optical means the parasitic contribution of environmental radiation.” Carlson at [0026].
[1F] the measurement device further comprising a receiver configured to: capture light while the LEDs are off and convert the captured light into a first signal and capture light while at least one of the LEDs is on and convert the captured light into a second signal, the captured light including at least a portion of the input optical beam reflected from the tissue;	Carlson discloses and/or renders obvious “the measurement device further comprising a receiver configured to: capture light while the LEDs are off and convert the captured light into a first signal and capture light while at least one of the LEDs is on and convert the captured light into a second signal, the captured light including at least a portion of the input optical beam reflected from the tissue.” “At least one light source frequency modulating means to frequency modulate the optical radiation of the light source at a carrier frequency in order to shift the power spectrum of the pulsoximeter signals. The basic idea of using AC-Coupling or Lock-In Amplification (synchronous detection), is to temporarily modulate the amplitude of the optical radiation of, e.g., the LED at a carrier frequency Fc in order to shift the power spectrum of the pulsoximeter signals into a higher frequency range where environmental optical radiation is unlikely and electronic band pass filtering is technically less stringent.” Carlson at [0020]. “Again, in addition to the above mentioned two methods or as an alternative, it is further proposed to temporarily modulate the amplitude of the optical radiation of the light source by using e.g. AC-Coupling or Lock-In Amplification detection means. The basic idea of using AC-Coupling or Lock-In Amplification detection means is to temporarily modulate the optical radiation of, e.g., the LED at the carrier frequency Fc in order to shift the power spectrum of the pulsoximeter signals into a higher frequency range where an environmental optical radiation is unlikely and electronic band pass filtering is technologically less stringent.” Carlson at [0027]. “As a consequence, it is therefore proposed to emit light by the LEDs not as current or continuous light but as pulsed light. The frequency is chosen in such a way that it is outside the frequency

Asserted Claim of ’040 Patent	U.S. Appl. Pub. No. 2005/0049468 to Carlson et al. (“Carlson”)
	spectrum of sunlight and of ambient light which, according to FIG. 7 b, is in the range of above approximately 1000 Hz. Thus, the pulsoximeter signals are readily discriminated from electronic and parasitic contributions of environmental optical radiation outside the frequency fc+/−5 Hz increasing significantly the Signal-to-Noise and Signal-to-Background ratio. FIG. 8 shows the shift spectrum of signal to a region where there is little influence, e.g. of ambient light. F0 is the chosen frequency of the emitted light to operate the pulsoximeter sensor and the range between f0−5 Hz and f0+5 Hz is the consequence of the influence of the frequency due to physiological signal. Therefore, as shown in FIG. 8, the frequency spectrum of signal at the photo diode does have a basic signal contribution due to physiological signal. The signal contribution which is shown at the top of the signal contribution due to physiological signal and which is due to ambient light, is very small and as a consequence is approximately neglectable. Any noise or sunlight within the range of 0 to 120 Hz, while the light beam for the pulsoximetric measurement is within the range of approximately f0−5 Hz to f0+5 Hz, will not influence the measurement of the pulsoximetric sensor. F0 could be e.g., as mentioned, 1000 Hz which of course is a frequency far outside of any indoor light source, as e.g. halogen light, conventional light, etc. f0 of course can be chosen at any other frequency, as e.g. 2000 Hz or even higher. By using light source modulation, it is even possible to use an additional filter removing a certain frequency spectrum. Looking e.g. at FIG. 9, it is possible to arrange a filter band pass 51 which is e.g. removing any frequencies in the range of 0 to 120 Hz. The respective filter is shown in form of the dashed line 51. As a result, we end up by a diagram according to FIG. 9 b only showing any measurements in the range of f0−5 Hz to f0+5 Hz.” Carlson at [0069]. “Finally, after the measurements with pulse light have been executed, of course a reversed phase shifting or modulation has to be executed to calculate the real values of the Pulsoximetric measurement. Again, this reverse face shifting on modulation according to Lock-In technique is known out of the state of the art.” Carlson at [0070].
[1G] the measurement device configured to improve a signal-to-noise ratio of the input optical beam reflected from the tissue by	Carlson renders obvious “the measurement device configured to improve a signal-to-noise ratio of the input optical beam reflected from the tissue by differencing the first signal and the second signal.”

Asserted Claim of ’040 Patent	U.S. Appl. Pub. No. 2005/0049468 to Carlson et al. (“Carlson”)
differencing the first signal and the second signal;	
[1H] the light source configured to further improve the signal-to-noise ratio of the input optical beam reflected from the tissue by increasing the light intensity relative to the initial light intensity from at least one of the LEDs;	Carlson discloses and/or renders obvious “the light source configured to further improve the signal-to-noise ratio of the input optical beam reflected from the tissue by increasing the light intensity relative to the initial light intensity from at least one of the LEDs.” *See* CHART ONE: ’533 Patent, Claim Element 5C above.
[1I] the measurement device further configured to generate an output signal representing at least in part a non-invasive measurement on blood contained within the tissue; and	Carlson discloses and/or renders obvious “the measurement device further configured to generate an output signal representing at least in part a non-invasive measurement on blood contained within the tissue.” *See* CHART ONE: ’533 Patent, Claim Element 10 above.
[1J] the wearable device configured to communicate with the smart phone or tablet, the smart phone or tablet comprising a wireless receiver, a wireless transmitter, a display, a voice input module, a speaker, and a touch screen, the smart phone or tablet configured to receive and to process at least a portion of the output signal,	Carlson discloses and/or renders obvious “the wearable device configured to communicate with the smart phone or tablet, the smart phone or tablet comprising a wireless receiver, a wireless transmitter, a display, a voice input module, a speaker, and a touch screen, the smart phone or tablet configured to receive and to process at least a portion of the output signal.” *See* CHART ONE: ’533 Patent, Claim Elements 5G and 5H above.

Asserted Claim of ’040 Patent	U.S. Appl. Pub. No. 2005/0049468 to Carlson et al. (“Carlson”)
[1K] wherein the smart phone or tablet is configured to store and display the processed output signal, wherein at least a portion of the processed output signal is configured to be transmitted over a wireless transmission link.	Carlson discloses and/or renders obvious “wherein the smart phone or tablet is configured to store and display the processed output signal, wherein at least a portion of the processed output signal is configured to be transmitted over a wireless transmission link.” *See* CHART ONE: ’533 Patent, Claim Elements 5I and 5J above.
[2] The wearable device of claim 1, wherein the receiver is configured to be synchronized to the modulation of the at least one of the LEDs.	Carlson discloses and/or renders obvious “[t]he wearable device of claim 1, wherein the receiver is configured to be synchronized to the modulation of the at least one of the LEDs.” *See* CHART ONE: ’533 Patent, Claim Element 5F above.
[4] The wearable device of claim 1, wherein the receiver is located a first distance from a first one of the LEDs and a different distance from a second one of the LEDs such that the receiver can capture a third signal from the first LED and a fourth signal from the second LED, and wherein the output signal is generated in part by comparing the third and fourth signals.	Carlson discloses and/or renders obvious “[t]he wearable device of claim 1, wherein the receiver is located a first distance from a first one of the LEDs and a different distance from a second one of the LEDs such that the receiver can capture a third signal from the first LED and a fourth signal from the second LED, and wherein the output signal is generated in part by comparing the third and fourth signals.” *See* CHART ONE: ’533 Patent, Claim Element 8 above.

EXHIBIT N-3

U.S. Patent No. 9,861,286 vs Carlson

Priority Date/Publication Date: March 3, 2005 Prior Art Status: §§ 102(a) and (b)

U.S. Appl. Pub. No. 2005/0049468 to Carlson et al. ("Carlson") anticipates the asserted claims of U.S. Patent No. 9,861,286 ("the '286 Patent") or renders those claims obvious alone and/or in view of at least any of the references identified in Apple's Obviousness Combinations Chart.

As set forth in Apple's Invalidity Contentions, the below contentions apply the prior art in part in accordance with Apple's assumption that Omni contends the claims are not invalid under 35 U.S.C. § 112. However, Apple's below contentions do not represent Apple's agreement or view as to the meaning, definiteness, written description support for, or enablement of any of the asserted claims. For each dependent claim, the disclosures cited for the claim from which it depends are incorporated by reference.

CHART THREE: U.S. Patent No. 9,861,286 vs Carlson

Asserted Claim of ’286 Patent	U.S. Appl. Pub. No. 2005/0049468 to Carlson et al. (“Carlson”)
[16] A wearable device for use with a smart phone or tablet, the wearable device comprising:	To the extent the preamble is limiting, Carlson discloses and/or renders obvious “[a] wearable device for use with a smart phone or tablet.” *See* CHART ONE: ’533 Patent, Claim Elements 5, 5G, and 13A above.
[16A] a measurement device including a light source comprising a plurality of light emitting diodes (LEDs) for measuring one or more physiological parameters,	Carlson discloses and/or renders obvious “a measurement device including a light source comprising a plurality of light emitting diodes (LEDs) for measuring one or more physiological parameters.” *See* CHART ONE: ’533 Patent, Claim Element 13A above.
[16B] the measurement device configured to generate, by modulating at least one of the LEDs having an initial light intensity, an optical beam having a plurality of optical wavelengths,	Carlson discloses and/or renders obvious “the measurement device configured to generate, by modulating at least one of the LEDs having an initial light intensity, an optical beam having a plurality of optical wavelengths.” *See* CHART TWO: ’040 Patent, Claim Element 1B above.
[16C] wherein at least a portion of the plurality of optical wavelengths is a near-infrared wavelength between 700 nanometers and 2500 nanometers;	Carlson discloses and/or renders obvious “wherein at least a portion of the plurality of optical wavelengths is a near-infrared wavelength between 700 nanometers and 2500 nanometers.” *See* CHART ONE: ’533 Patent, Claim Element 5B above.
[16D] the measurement device comprising one or more lenses configured to receive and to deliver a portion of the optical beam to tissue, wherein the tissue reflects at least a portion of the	Carlson discloses and/or renders obvious “the measurement device comprising one or more lenses configured to receive and to deliver a portion of the optical beam to tissue, wherein the tissue reflects at least a portion of the optical beam delivered to the tissue, and wherein the measurement device is adapted to be placed on a wrist or an ear of a user.” *See* CHART ONE: ’533 Patent, Claim Element 5D above.

Asserted Claim of ’286 Patent	U.S. Appl. Pub. No. 2005/0049468 to Carlson et al. (“Carlson”)
optical beam delivered to the tissue, and	
[16E] wherein the measurement device is adapted to be placed on a wrist or an ear of a user;	Carlson discloses and/or renders obvious “wherein the measurement device is adapted to be placed on a wrist or an ear of a user.” “Comparing the clip mechanism according to FIGS. 1 and 2 and the frame 61 as shown in FIG. 10a, it is obvious that in using a frame it is not easy to arrange or remove the pulsoximetric sensor to or from an earlobe of an ear, if required, e.g. if a person wearing the pulsoximetric sensor is taking a bath, a shower, etc. Therefore, it is proposed, as shown schematically in FIG. 10b, to use a snap-in mechanism 71, which means that the champ mechanism 63 holding the LED 15 can be rotated e.g. in direction of dashed line 73 around an axis 69 and removed from the frame 61 or vice versa can be arranged at the frame 61 by arranging within the axis 69 and within the snap mechanism 71.” Carlson at [0074].

Asserted Claim of ’286 Patent	U.S. Appl. Pub. No. 2005/0049468 to Carlson et al. (“Carlson”)
	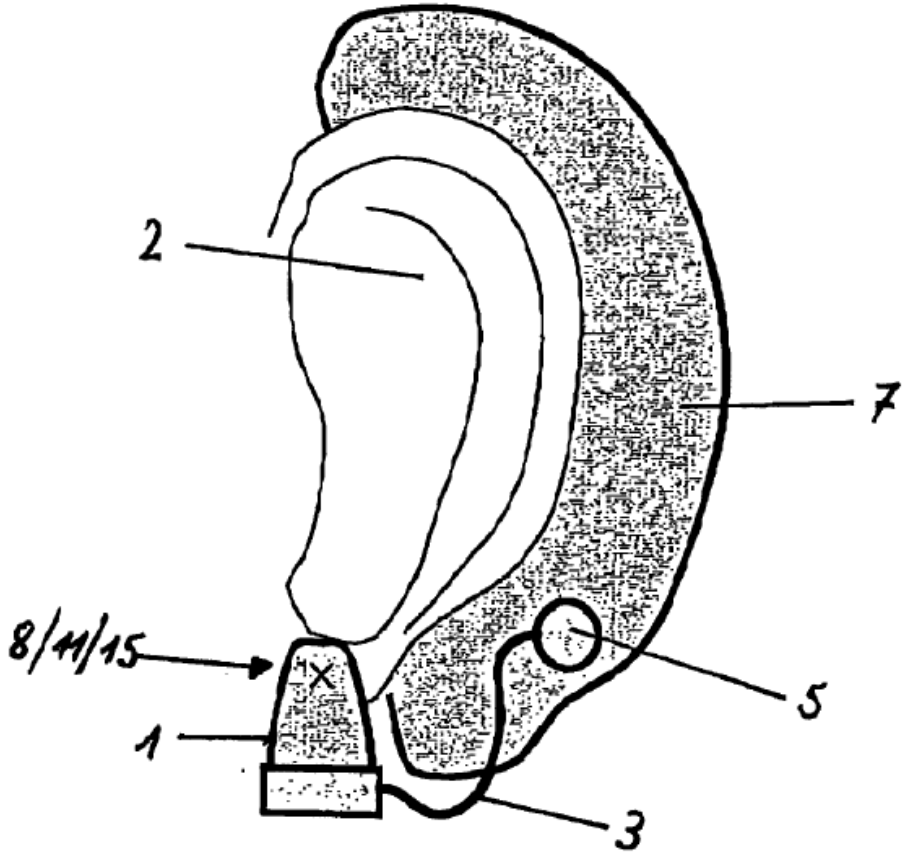 Figure 1

Asserted Claim of ’286 Patent	U.S. Appl. Pub. No. 2005/0049468 to Carlson et al. (“Carlson”)
[16F] the measurement device further comprising a receiver configured to: capture light while the LEDs are off and convert the captured light into a first signal and capture light while at least one of the LEDs is on and convert the captured light into a second signal, the captured light including at least a portion of the optical beam reflected from the tissue;	Carlson discloses and/or renders obvious “the measurement device further comprising a receiver configured to: capture light while the LEDs are off and convert the captured light into a first signal and capture light while at least one of the LEDs is on and convert the captured light into a second signal, the captured light including at least a portion of the optical beam reflected from the tissue.” *See* CHART TWO: ’040 Patent, Claim Element 1F above.
[16G] the measurement device configured to improve a signal-to-noise ratio of the optical beam reflected from the tissue by differencing the first signal and the second signal;	Carlson discloses and/or renders obvious “the measurement device configured to improve a signal-to-noise ratio of the optical beam reflected from the tissue by differencing the first signal and the second signal.” *See* CHART TWO: ’040 Patent, Claim Element 1G above.
[16H] the light source configured to further improve the signal-to-noise ratio of the optical beam reflected from the tissue by increasing the light intensity relative to the initial light intensity from at least one of the LEDs;	Carlson discloses and/or renders obvious “the light source configured to further improve the signal-to-noise ratio of the optical beam reflected from the tissue by increasing the light intensity relative to the initial light intensity from at least one of the LEDs.” *See* CHART ONE: ’533 Patent, Claim Element 5C above.

Asserted Claim of ’286 Patent	U.S. Appl. Pub. No. 2005/0049468 to Carlson et al. (“Carlson”)
[16I] the measurement device further configured to generate an output signal representing at least in part a non-invasive measurement on blood contained within the tissue; and	Carlson discloses and/or renders obvious “the measurement device further configured to generate an output signal representing at least in part a non-invasive measurement on blood contained within the tissue.” *See* CHART ONE: ’533 Patent, Claim Element 10 above.
[16J] wherein the receiver includes a plurality of spatially separated detectors,	Carlson discloses and/or renders obvious “wherein the receiver includes a plurality of spatially separated detectors.” “It is understood that also one, two, or more light receiving detectors can be used.” Carlson at [0075].
[16K] wherein at least one analog to digital converter is coupled to the spatially separated detectors.	Carlson discloses and/or renders obvious “wherein at least one analog to digital converter is coupled to the spatially separated detectors.” “Critical points are: Human tissue scatters and transmits light in the visible and near infrared (NIR) wavelength range. Therefore, suppression of environmental optical radiation, e.g. sunlight, is difficult by geometric means of the architecture of the pulsoximeter sensor. The power spectrum of environmental optical radiation strongly varies as a function or time and place where the pulsoximeter is used, e.g. day versus night, indoor versus outdoor. Therefore, the background (offset) in the detected optical power varies in a large range, making difficult the analog and digital signal processing of the primary sensor signal. The temporal spectrum of pulsoximeter signals varies in the range of 0.5 Hz to 5 Hz where environmental optical radiation may have significant components leading to parasitic contributions which cannot be separated from the pulsoximeter signals of interest. Realization of a performing electronic band pass filter in the range of 0.5 Hz to 5 Hz, in order to suppress DC offset and high frequency contribution in the pulsoximeter signal, is technically challenging. Further, optical contributions, e.g. temporally structured day-light, and electronic

Asserted Claim of ’286 Patent	U.S. Appl. Pub. No. 2005/0049468 to Carlson et al. (“Carlson”)
	noise, e.g. 1/f (1/frequency-Noise), are stronger in the low frequency range 0.5 Hz to 10 Hz than in higher frequency ranges.” Carlson at [0005].
[17] The wearable device of claim 16, wherein at least one LED emits at a first wavelength and at least another LED emits at a second wavelength, and wherein the first wavelength has a first penetration depth into the tissue and wherein the second wavelength has a second penetration depth into the tissue different from the first penetration depth.	Carlson discloses and/or renders obvious “[t]he wearable device of claim 16, wherein at least one LED emits at a first wavelength and at least another LED emits at a second wavelength, and wherein the first wavelength has a first penetration depth into the tissue and wherein the second wavelength has a second penetration depth into the tissue different from the first penetration depth..” “As already mentioned in the introduction, the sensor is working according to the oximetric principal which is known best out of the state of the art. Optical pulsoximetry is used for non-invasive measurement, e.g. for pulsation and oxygen saturation in the human body. The light source is emitting light at two wavelengths, at 660 nm and a second wavelength within the range of 800 to 1000 nm, which means in the present case at 890 nm. Therefore, it is of course also possible to have two light emitting sources arranged, which means two LEDs. The light receiver is determining the light transmitted through the earlobe, which means through the tissue portion of a person to be surveyed.” Carlson at [0050].
[19] The wearable device of claim 16, wherein the receiver is configured to be synchronized to the modulating of at least one of the LEDs.	Carlson discloses and/or renders obvious “[t]he wearable device of claim 16, wherein the receiver is configured to be synchronized to the modulating of at least one of the LEDs.” *See* CHART ONE: ’533 Patent, Claim Element 5F above.
[20] The wearable device of claim 16, wherein the receiver is located a first distance from a first one of the LEDs and a different distance from a second one of the LEDs such that the receiver can capture a third signal from the first LED and a fourth signal from the second LED, and wherein the	Carlson discloses and/or renders obvious “[t]he wearable device of claim 16, wherein the receiver is located a first distance from a first one of the LEDs and a different distance from a second one of the LEDs such that the receiver can capture a third signal from the first LED and a fourth signal from the second LED, and wherein the output signal is generated in part by comparing the third and fourth signals..” *See* CHART ONE: ’533 Patent, Claim Element 8 above.

Asserted Claim of ’286 Patent	U.S. Appl. Pub. No. 2005/0049468 to Carlson et al. (“Carlson”)
output signal is generated in part by comparing the third and fourth signals.	

EXHIBIT N-4

U.S. Patent No. 9,885,698 vs Carlson

Priority Date/Publication Date: March 3, 2005 Prior Art Status: §§ 102(a) and (b)

U.S. Appl. Pub. No. 2005/0049468 to Carlson et al. ("Carlson") anticipates the asserted claims of U.S. Patent No. 9,885,698 ("the '698 Patent") or renders those claims obvious alone and/or in view of at least any of the references identified in Apple's Obviousness Combinations Chart.

As set forth in Apple's Invalidity Contentions, the below contentions apply the prior art in part in accordance with Apple's assumption that Omni contends the claims are not invalid under 35 U.S.C. § 112. However, Apple's below contentions do not represent Apple's agreement or view as to the meaning, definiteness, written description support for, or enablement of any of the asserted claims. For each dependent claim, the disclosures cited for the claim from which it depends are incorporated by reference.

CHART FOUR: U.S. Patent No. 9,885,698 vs Carlson

Asserted Claim of ’698 Patent	U.S. Appl. Pub. No. 2005/0049468 to Carlson et al. (“Carlson”)
[1] A wearable device, comprising:	To the extent the preamble is limiting, Carlson discloses and/or renders obvious “[a] wearable device.” *See* CHART ONE: ’533 Patent, Claim Elements 5 and 13A above.
[1A] a measurement device including a light source comprising a plurality of light emitting diodes (LEDs) for measuring one or more physiological parameters,	Carlson discloses and/or renders obvious “a measurement device including a light source comprising a plurality of light emitting diodes (LEDs) for measuring one or more physiological parameters.” *See* CHART ONE: ’533 Patent, Claim Element 13A above.
[1B] the measurement device configured to generate, by modulating at least one of the LEDs having an initial light intensity, an input optical beam having one or more optical wavelengths,	Carlson discloses and/or renders obvious “the measurement device configured to generate, by modulating at least one of the LEDs having an initial light intensity, an input optical beam having one or more optical wavelengths.” *See* CHART TWO: ’040 Patent, Claim Element 1B above.
[1C] wherein at least a portion of the one or more optical wavelengths is a near-infrared wavelength between 700 nanometers and 2500 nanometers;	Carlson discloses and/or renders obvious “wherein at least a portion of the one or more optical wavelengths is a near-infrared wavelength between 700 nanometers and 2500 nanometers.” *See* CHART ONE: ’533 Patent, Claim Element 5B above.
[1D] the measurement device comprising one or more lenses configured to receive and to deliver a portion of the input optical beam to tissue, wherein	Carlson discloses and/or renders obvious “the measurement device comprising one or more lenses configured to receive and to deliver a portion of the input optical beam to tissue, wherein the tissue reflects at least a portion of the input optical beam delivered to the tissue.” *See* CHART ONE: ’533 Patent, Claim Element 5D above.

Asserted Claim of ’698 Patent	U.S. Appl. Pub. No. 2005/0049468 to Carlson et al. (“Carlson”)
the tissue reflects at least a portion of the input optical beam delivered to the tissue;	
[1E] the measurement device further comprising a receiver, wherein the receiver includes a plurality of spatially separated detectors, the detectors configured to: capture light while the LEDs are off and convert the captured light into a first signal; and capture light while at least one of the LEDs is on and convert the captured light into a second signal, the captured light including at least a portion of the input optical beam reflected from the tissue;	Carlson discloses and/or renders obvious “the measurement device further comprising a receiver, wherein the receiver includes a plurality of spatially separated detectors, the detectors configured to: capture light while the LEDs are off and convert the captured light into a first signal; and capture light while at least one of the LEDs is on and convert the captured light into a second signal, the captured light including at least a portion of the input optical beam reflected from the tissue.” *See* CHART TWO: ’040 Patent, Claim Element 1F and CHART THREE: ’286 Patent, Claim Element 16J above.
[1F] wherein at least one analog to digital converter is coupled to the spatially separated detectors and is configured to generate at least a first data signal from the first signal and at least a second data signal from the second signal;	Carlson discloses and/or renders obvious “wherein at least one analog to digital converter is coupled to the spatially separated detectors and is configured to generate at least a first data signal from the first signal and at least a second data signal from the second signal.” *See* CHART TWO: ’040 Patent, Claim Element 1F and CHART THREE: ’286 Patent, Claim Element 16K above.

Asserted Claim of ’698 Patent	U.S. Appl. Pub. No. 2005/0049468 to Carlson et al. (“Carlson”)
[1G] the measurement device configured to improve a signal-to-noise ratio of the input optical beam reflected from the tissue by differencing the first data signal and the second data signal to generate an output signal representing at least in part a non-invasive measurement on blood contained within the tissue; and	Carlson discloses and/or renders obvious “the measurement device configured to improve a signal-to-noise ratio of the input optical beam reflected from the tissue by differencing the first data signal and the second data signal to generate an output signal representing at least in part a non-invasive measurement on blood contained within the tissue.” *See* CHART ONE: ’533 Patent, Claim Element 10 and CHART TWO: ’040 Patent, Claim Element 1G above.
[1H] wherein the modulating at least one of the LEDs has a modulation frequency, and wherein the receiver is configured to use a lock-in technique that detects the modulation frequency.	Carlson discloses and/or renders obvious “wherein the modulating at least one of the LEDs has a modulation frequency, and wherein the receiver is configured to use a lock-in technique that detects the modulation frequency.” “Again, in addition to the above mentioned two configurations, or as an alternative, a further configuration is proposed which comprises at least the following components: at least one measuring sensor on the person or the animal for the acquisition or the monitoring of medically relevant data, such as in particular data, which describe the cardio vascular and pulmonary function and/or contained data regarding blood values or blood composition, which sensor comprises at least one light source which can emit light at least at two wavelengths, as well as at least one light receiver for determining the light transmitted through a tissue portion of the person, and at least one light source frequency modulating means to frequency modulate the optical radiation of the light source at a carrier frequency in order to shift the power spectrum of the pulsoximeter signals. The basic idea of using AC-Coupling or Lock-In Amplification (synchronous detection), is to temporarily modulate the amplitude of the optical radiation of, e.g., the LED at a carrier frequency fc in order to shift the power spectrum of the pulsoximeter signals into a higher frequency range where environmental optical radiation is unlikely and electronic band pass filtering is technologically less stringent. Thus, the pulsoximeter signals are readily discriminated

Asserted Claim of ’698 Patent	U.S. Appl. Pub. No. 2005/0049468 to Carlson et al. (“Carlson”)
	from electronic and parasitic contributions of environmental optical radiation outside the frequency range of, e.g. fc +/−5 Hz, increasing significantly the S/N (Signal/Noise)- and S/B ratio.” Carlson at [0018]. “At least one light source frequency modulating means to frequency modulate the optical radiation of the light source at a carrier frequency in order to shift the power spectrum of the pulsoximeter signals. The basic idea of using AC-Coupling or Lock-In Amplification (synchronous detection), is to temporarily modulate the amplitude of the optical radiation of, e.g., the LED at a carrier frequency Fc in order to shift the power spectrum of the pulsoximeter signals into a higher frequency range where environmental optical radiation is unlikely and electronic band pass filtering is technically less stringent.” Carlson at [0020]. “Again, in addition to the above mentioned two methods or as an alternative, it is further proposed to temporarily modulate the amplitude of the optical radiation of the light source by using e.g. AC-Coupling or Lock-In Amplification detection means. The basic idea of using AC-Coupling or Lock-In Amplification detection means is to temporarily modulate the optical radiation of, e.g., the LED at the carrier frequency Fc in order to shift the power spectrum of the pulsoximeter signals into a higher frequency range where an environmental optical radiation is unlikely and electronic band pass filtering is technologically less stringent.” Carlson at [0027]. “As a consequence, it is therefore proposed to emit light by the LEDs not as current or continuous light but as pulsed light. The frequency is chosen in such a way that it is outside the frequency spectrum of sunlight and of ambient light which, according to FIG. 7 b, is in the range of above approximately 1000 Hz. Thus, the pulsoximeter signals are readily discriminated from electronic and parasitic contributions of environmental optical radiation outside the frequency fc+/−5 Hz increasing significantly the Signal-to-Noise and Signal-to-Background ratio. FIG. 8 shows the shift spectrum of signal to a region where there is little influence, e.g. of ambient light. F0 is the chosen frequency of the emitted light to operate the pulsoximeter sensor and the range between f0−5 Hz and f0+5 Hz is the consequence of the influence of the frequency due to physiological signal. Therefore, as shown in FIG. 8, the frequency spectrum of signal at the photo diode does have a basic signal contribution due to physiological signal. The signal contribution which is shown at the top of the signal contribution due to physiological signal and which is due to ambient

Asserted Claim of ’698 Patent	U.S. Appl. Pub. No. 2005/0049468 to Carlson et al. (“Carlson”)
	light, is very small and as a consequence is approximately neglectable. Any noise or sunlight within the range of 0 to 120 Hz, while the light beam for the pulsoximetric measurement is within the range of approximately f0−5 Hz to f0+5 Hz, will not influence the measurement of the pulsoximetric sensor. F0 could be e.g., as mentioned, 1000 Hz which of course is a frequency far outside of any indoor light source, as e.g. halogen light, conventional light, etc. f0 of course can be chosen at any other frequency, as e.g. 2000 Hz or even higher. By using light source modulation, it is even possible to use an additional filter removing a certain frequency spectrum. Looking e.g. at FIG. 9, it is possible to arrange a filter band pass 51 which is e.g. removing any frequencies in the range of 0 to 120 Hz. The respective filter is shown in form of the dashed line 51. As a result, we end up by a diagram according to FIG. 9 b only showing any measurements in the range of f0−5 Hz to f0+5 Hz.” Carlson at [0069]. “Finally, after the measurements with pulse light have been executed, of course a reversed phase shifting or modulation has to be executed to calculate the real values of the Pulsoximetric measurement. Again, this reverse face shifting on modulation according to Lock-In technique is known out of the state of the art.” Carlson at [0070]. *See also* Carlson at [0065], [0070].
[2] The wearable device of claim 1, wherein the plurality of LEDs and the plurality of spatially separated detectors are mounted on a common structure, and wherein the plurality of LEDs are coupled electrically to a power supply.	Carlson discloses and/or renders obvious “[t]he wearable device of claim 1, wherein the plurality of LEDs and the plurality of spatially separated detectors are mounted on a common structure, and wherein the plurality of LEDs are coupled electrically to a power supply..” “FIG. 1 shows schematically the arrangement of an ear sensor 1 which can be arranged in form of an ear clip. This sensor 1 can be arranged e.g. at an earlobe of ear 2. Furthermore, the sensor or ear clip is connected via a wire 3 and the connection 5 with the main unit 7 including e.g. a power source, like a battery, and measuring and/or monitoring electronics.” Carlson at [0048]. “In FIG. 2, the ear clip 1 is shown in cross section where it can specifically be seen that the sensor is designed in form on a clip 13. The sensor or ear clip 13 furthermore includes a light source 15 which emits a light beam 8 to a light receiver 11. The light is guided or emitted through the ear skin or earlobe 2.” Carlson at [0049].

Asserted Claim of ’698 Patent	U.S. Appl. Pub. No. 2005/0049468 to Carlson et al. (“Carlson”)
	“The light source is emitting light at two wavelengths, at 660 nm and a second wavelength within the range of 800 to 1000 nm, which means in the present case at 890 nm. Therefore, it is of course also possible to have two light emitting sources arranged, which means two LEDs.” Carlson at [0050]. “Therefore, it is proposed, as shown in FIG. 4, to use beam shaping optics 20 to direct the emitted optical radiation 8 emitted from the two LEDs 15 to the middle of the earlobe.” Carlson at [0054]. “Comparing the clip mechanism according to FIGS. 1 and 2 and the frame 61 as shown in FIG. 10a, it is obvious that in using a frame it is not easy to arrange or remove the pulsoximetric sensor to or from an earlobe of an ear, if required, e.g. if a person wearing the pulsoximetric sensor is taking a bath, a shower, etc. Therefore, it is proposed, as shown schematically in FIG. 10b, to use a snap-in mechanism 71, which means that the champ mechanism 63 holding the LED 15 can be rotated e.g. in direction of dashed line 73 around an axis 69 and removed from the frame 61 or vice versa can be arranged at the frame 61 by arranging within the axis 69 and within the snap mechanism 71.” Carlson at [0074].

Asserted Claim of ’698 Patent	U.S. Appl. Pub. No. 2005/0049468 to Carlson et al. (“Carlson”)
	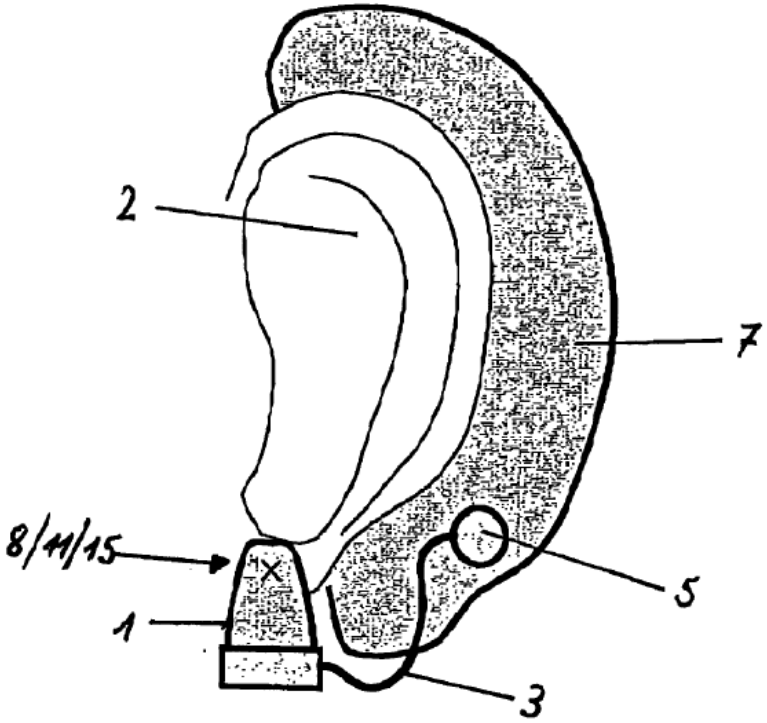 Figure 1

Asserted Claim of ’698 Patent	U.S. Appl. Pub. No. 2005/0049468 to Carlson et al. (“Carlson”)
	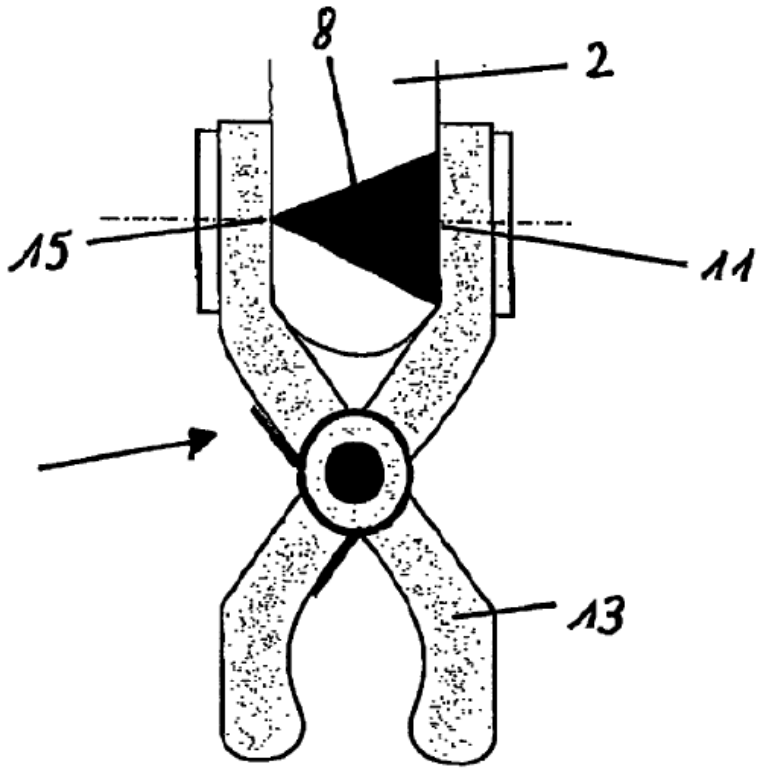 Figure 2
[3] The wearable device of claim 1, wherein the light source is configured to further improve the	Carlson discloses and/or renders obvious “[t]he wearable device of claim 1, wherein the light source is configured to further improve the signal-to-noise ratio of the input beam reflected from

Asserted Claim of ’698 Patent	U.S. Appl. Pub. No. 2005/0049468 to Carlson et al. (“Carlson”)
signal-to-noise ratio of the input beam reflected from the tissue by increasing the light intensity relative to the initial light intensity from at least one of the LEDs, and wherein the receiver is configured to be synchronized to at least one of the LEDs.	the tissue by increasing the light intensity relative to the initial light intensity from at least one of the LEDs, and wherein the receiver is configured to be synchronized to at least one of the LEDs.” *See* CHART ONE: ’533 Patent, Claim Elements 5C and 5F above.
[5] The wearable device of claim 1, wherein the wearable device is configured to communicate with a smart phone or tablet, the smart phone or tablet comprising a wireless receiver, a wireless transmitter, a display, a voice input module, a speaker, and a touch screen, the smart phone or tablet configured to receive and to process at least a portion of the output signal, wherein the smart phone or tablet is configured to store and display the processed output signal, wherein at least a portion of the processed output signal is configured to be transmitted over a wireless transmission link.	Carlson discloses and/or renders obvious “[t]he wearable device of claim 1, wherein the wearable device is configured to communicate with a smart phone or tablet, the smart phone or tablet comprising a wireless receiver, a wireless transmitter, a display, a voice input module, a speaker, and a touch screen, the smart phone or tablet configured to receive and to process at least a portion of the output signal, wherein the smart phone or tablet is configured to store and display the processed output signal, wherein at least a portion of the processed output signal is configured to be transmitted over a wireless transmission link.” *See* CHART ONE: ’533 Patent, Claim Elements 5G, 5H, 5I, and 5J above.