Paper No. 13

UNITED STATES PATENT AND TRADEMARK OFFICE

BEFORE THE PATENT TRIAL AND APPEAL BOARD

SAMSUNG ELECTRONICS CO., LTD., SAMSUNG ELECTRONICS AMERICA, INC., FOSSIL GROUP, INC., FOSSIL STORES I, INC., FOSSIL PARTNERS, L.P., OURA HEALTH OY, AND ONEPLUS TECHNOLOGY (SHENZHEN) CO., LTD.,

Petitioners,

v.

OMNI MEDSCI, INC.,
Patent Owner.

U.S. Patent No. 12,193,790

Case No. IPR2025-01253

PATENT OWNER'S PRELIMINARY RESPONSE

TABLE OF CONTENTS

I. INTRODUCTION 1
II. OVERVIEW OF THE '790 PATENT 2
III. SUMMARY OF PETITIONERS' REFERENCES 7
A. Lisogurski (EX1025) (Grounds 1-2) 7
B. Carlson (EX1028) (Ground 2) 9
IV. LEVEL OF SKILL IN THE ART 10
V. CLAIM CONSTRUCTION 10
A. The Petition Should Be Denied Because Petitioners Take Inconsistent Claim Construction Positions Without Explanation 11
B. Limitation [7.m]: "to identify an object" 12
C. Other Board and District Court Constructions 13
VI. PETITIONERS FAILED TO MEET THEIR BURDEN 14
A. Ground 1: Alleged Obviousness Based on Lisogurski (Claim 7) 15
B. Ground 2: Alleged Obviousness Based on Lisogurski in view of Carlson (Claim 7) 23
VII. CONCLUSION 23

TABLE OF AUTHORITIES

Page(s)

Cases

3M Co. v. Evergreen Adhesives, Inc.,
860 F. App'x 724 (Fed. Cir. 2021).....19

Apple Inc. v. Omni MedSci, Inc.,
No. 2023-1034, 2024 WL 3084509 (Fed. Cir. June 21, 2024).....13

Alexsam, Inc. v. IDT Corp.,
715 F.3d 1336 (Fed. Cir. 2013) 21

Cisco Sys., Inc. v. C-Cation Techs., LLC,
IPR2014-00454, Paper 12 (PTAB Aug. 29, 2014).....19

Graham v. John Deere Co. of Kansas City,
383 U.S. 1 (1966).....22

Nidec Motor Corp. v. Zhongshan Broad Ocean Motor Co.,
868 F.3d 1013 (Fed. Cir. 2017) 10, 14

Revvo Techs., Inc. v. Cerebrum Sensor Techs., Inc.,
IPR2025-00632, Paper 20 (PTAB Nov. 3, 2025).....1, 11

Tesla, Inc. v. Intellectual Ventures II LLC,
IPR2025-00340, Paper 18 (PTAB Nov. 5, 2025).....12

United Therapeutics Corp. v. Liquidia Techs., Inc.,
74 F.4th 1360 (Fed. Cir. 2023) 19

Xerox Corp. v. Bytemark, Inc.,
IPR2022-00624, Paper 9 (PTAB Aug. 24, 2022).....21

Regulations

37 C.F.R. § 42.6 19

37 C.F.R. § 42.104 11

37 C.F.R. § 42.107 1

LISTING OF EXHIBITS

Exhibit No.	Description
2001	Complaint, *Omni MedSci, Inc. v. Samsung Electronics Co. Ltd. et al.*, 2:24-cv-01070-JRG-RSP (E.D. Tex.) (Dec. 20, 2024)
2004	Omni MedSci's Infringement Contentions Cover Document, *Omni MedSci, Inc. v. Samsung Electronics Co. Ltd. et al.*, 2:24-cv-01070-JRG-RSP (E.D. Tex.) (Mar. 12, 2025)
2005	Samsung, Fossil, and Oura's Motion to Stay, *Omni MedSci, Inc. v. Samsung Electronics Co. Ltd. et al.*, 2:24-cv-01070-JRG-RSP (E.D. Tex.) (Aug. 27, 2025)
2006	Order Denying Motion to Stay, *Omni MedSci, Inc. v. Samsung Electronics Co. Ltd. et al.*, 2:24-cv-01070-JRG-RSP (E.D. Tex.) (Aug. 29, 2025)
2007	Docket Navigator Statistics for District Judge James Rodney Gilstrap
2008	Lex Machina Statistics for District Judge James Rodney Gilstrap
2009	Model Order Focusing Patent Claims and Prior Art to Reduce Costs (E.D. Tex.)
2011-2030	Reserved
2031	Declaration of Igor Efimov, Ph.D.
2032	Curriculum vitae of Igor Efimov, Ph.D.
2033	Omni MedSci Inc.'s P.R. 4-2 Disclosure of Preliminary Claim Constructions and Extrinsic Evidence, *Omni MedSci, Inc. v. Samsung Electronics Co. Ltd. et al.*, 2:24-cv-01070-JRG-RSP

	(E.D. Tex.) (Oct. 31, 2025)
2034	Samsung Electronics, Co. Ltd., Samsung Electronics America, Inc., Fossil Group, Inc., Fossil Stores I, Inc., and Fossil Partners, L.P., and Oura Health Oy's P.R. 4-2 Disclosure of Preliminary Claim Constructions and Extrinsic Evidence, *Omni MedSci, Inc. v. Samsung Electronics Co. Ltd. et al.*, 2:24-cv-01070-JRG-RSP (E.D. Tex.) (Oct. 31, 2025)
2035-2038	Reserved
2039	Omni MedSci Inc.'s Corrected Opening Brief, *Omni MedSci, Inc. v. Apple Inc.,* 2025-1646 (Fed. Cir.) (Sept. 11, 2025)

Omni MedSci, Inc. ("Patent Owner") submits this Preliminary Response under 37 C.F.R. § 42.107 to the Petition for *Inter Partes* Review ("Petition") of U.S. Patent No. 12,193,790 ("the '790 Patent"), filed by Samsung Electronics Co. Ltd., Samsung Electronics America Inc., Fossil Group, Inc., Fossil Stores I, Inc., Fossil Partners, L.P., Oura Health Oy, and OnePlus Technology (Shenzhen) Co., Ltd. ("Petitioners").

I. INTRODUCTION

Patent Owner respectfully requests that the Director deny institution because Petitioners have failed to meet their burden of demonstrating that any challenged claim of the '790 Patent is unpatentable. The Petition is fatally flawed in two respects.

First, Petitioners take materially inconsistent claim construction positions in this proceeding and the parallel district court litigation. In the Texas Case, Petitioners argue that four claim terms, including "identify an object," are indefinite. Yet in this proceeding, Petitioners apply the plain and ordinary meaning to these same terms without explanation. This unexplained inconsistency alone warrants denial under the Board's recent precedent in *Revvo Technologies*.[1]

[1] *Revvo Techs., Inc. v. Cerebrum Sensor Techs., Inc.*, IPR2025-00632, Paper 20 at 3-4 (PTAB Nov. 3, 2025) (precedential).

Second, Petitioners failed to demonstrate a reasonable likelihood of success in connection with Grounds 1-2. Both grounds fail because Petitioners conflate measuring a known parameter with identifying an unknown object. Lisogurski describes a pulse oximetry system that presupposes the presence of hemoglobin and quantifies its oxygenation state—that is measurement, not identification. Carlson merely enhances signal quality through optical improvements but provides no computational means to recognize or establish what an object is. The '790 Patent, by contrast, discloses systems that identify unknown objects through spectral analysis, library matching, and algorithmic discrimination among multiple constituents. Because neither reference teaches the claimed identification functionality, institution should be denied.

II. OVERVIEW OF THE '790 PATENT

The '790 Patent discloses wearable optical systems that generate optical light, including near-infrared wavelengths, deliver that light to tissue (such as skin at the wrist), and detect returned light with one or more detectors. EX1001, 20:56-22:34; EX2031, ¶¶42-43. These systems process the resulting signals to obtain physiological information and, in certain embodiments, identify an object or material based on its optical response. EX1001, 87:32-33; EX2031, ¶42.

An exemplary system is depicted in Figure 31:

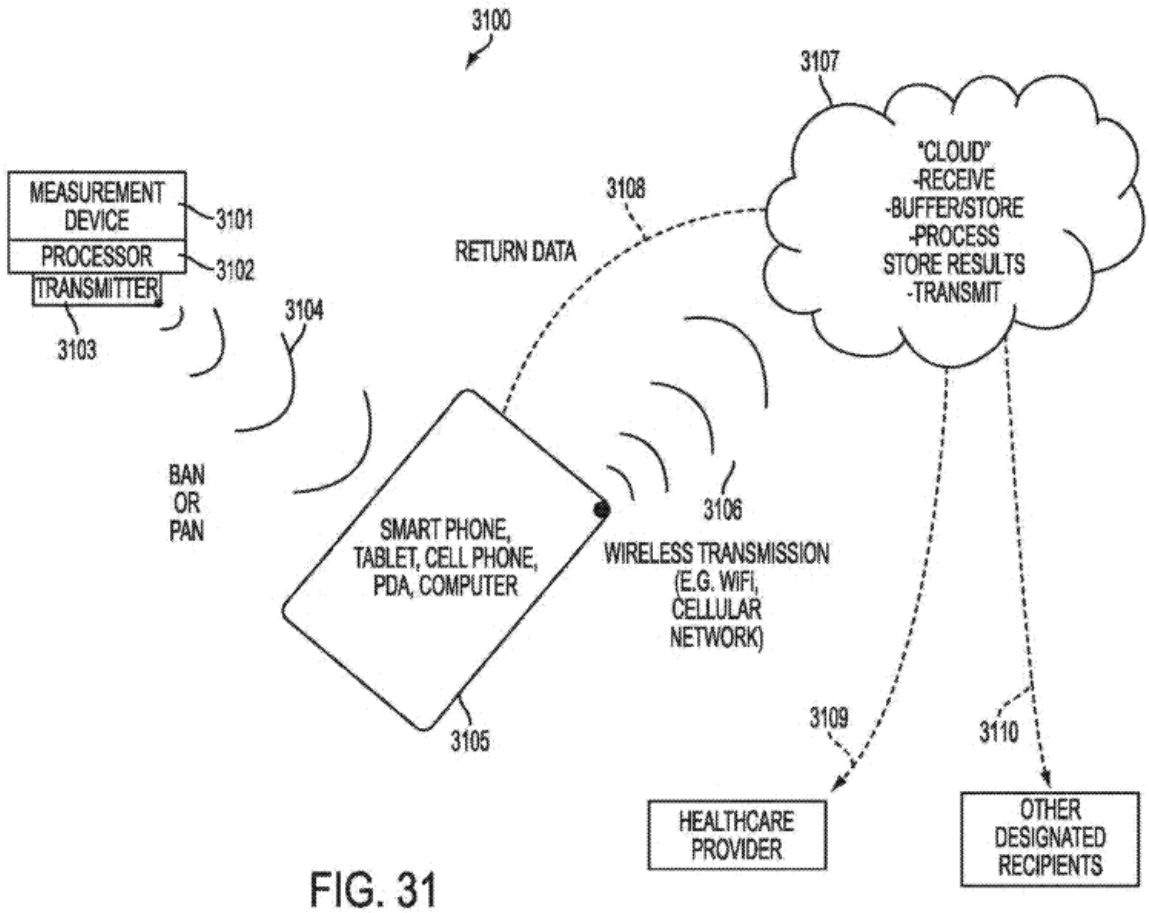

EX1001, FIG. 31

The specification describes implementations using a plurality of semiconductor diodes (e.g., LEDs or laser diodes) capable of emitting at one or more wavelengths, including near-infrared wavelengths in the 700-2500 nm range. EX1001, 20:56-22:34; FIG. 65B; EX2031, ¶43. Light is directed to tissue via optical lenses, and the reflected or transmitted light is received by a detection system which produces an electrical signal that is then analyzed. *Id*.

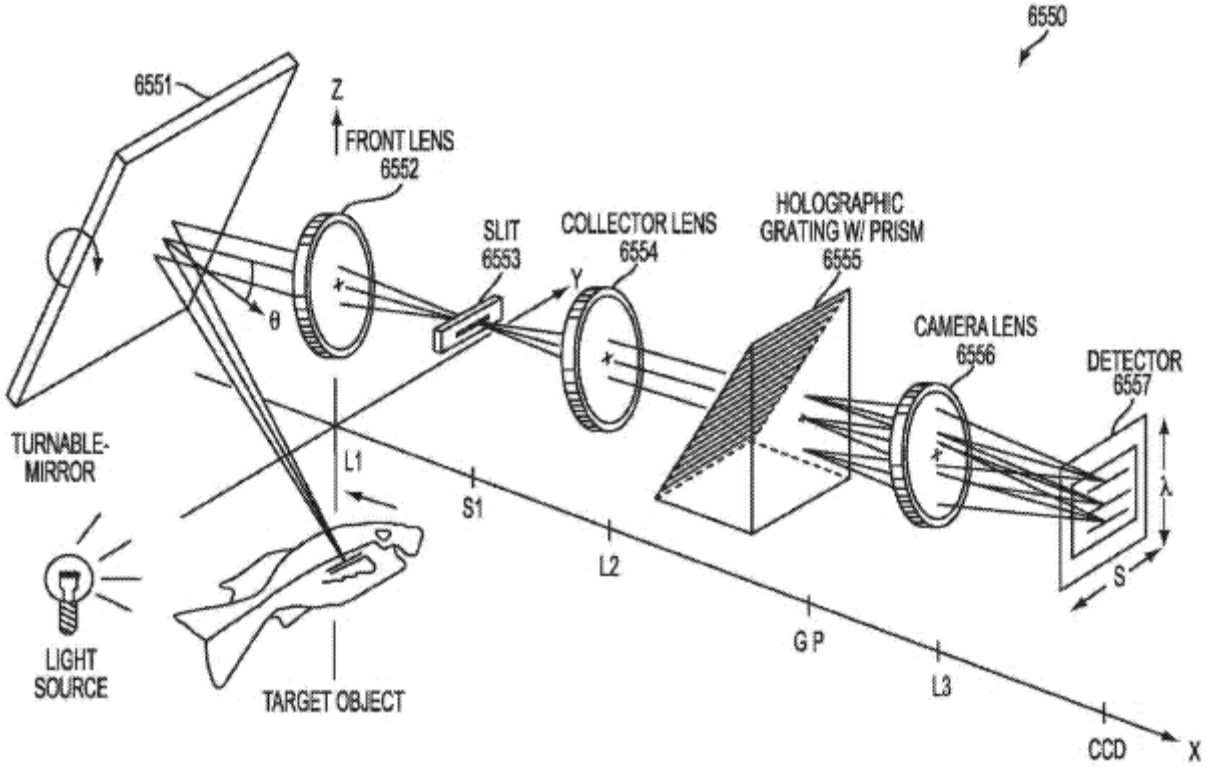

FIG. 65B

EX1001, FIG. 65B

The '790 Patent describes synchronization between the light source and the detection system to improve the signal to noise ratio, along with various modulation techniques to improve the signal to noise ratio. EX1001, 9:19-21, 59:64-67; EX2031, ¶44. Improving the signal to noise ratio improves the ability to identify an object—greater accuracy is achieved through reducing the relative contribution of ambient light and other background influences. EX2031, ¶44. For example, the specification describes the use of an active illuminator to modulate sunlight and use

synchronous or lock-in detection such that sunlight changes are factored out, improving the signal to noise ratio. EX 1001, 58:24-45; EX2031, ¶44. In another example, the signal to noise ratio is improved by "narrow band filtering around the modulation frequency may be used to reject noise outside the modulation frequency." EX1001, 58:34-36; EX2031, ¶45. In another example, "change detection schemes may be used, where the detection system captures the signal with the light source on and with the light source off. Again, for this system the light source may be modulated. Then, the signal with and without the light source is differenced." EX1001 at 58:37-41; EX2031, ¶46.

The '790 Patent performs identification by applying algorithmic analysis to multi-wavelength data. EX2031, ¶47. The specification describes identification through comparison against reference libraries, the use of mathematical modeling (such as multivariate techniques), and signal processing technologies to determine material identity. EX1001, 18:10-27; 20:28-32; 21:7-28; 54:32-59; EX2031, ¶47. "In addition, change detection may help to ***identify objects*** that change in the field of view." EX1001, 58:42-45;[2] EX2031, ¶47.

Identification is also described by the '790 Patent through correlating spectral data with a spectral library to identify the blood constituents of interest, including,

[2] All emphasis in evidence and case citations here is added unless otherwise noted.

for example, glucose, triacetin, ascorbate, lactate, alanine, and others. EX1001, 18:10-27; EX2031, ¶48. "Although glucose has a distinctive signature in the SWIR wavelength range, one problem of non-invasive monitoring is that many other blood constituents also have hydro-carbon bonds" and thus must be identified and distinguished. EX1001, 18:3-6; EX2031, ¶48. "To identify the blood constituents of interest…the spectrum may be correlated with a library of known spectra." EX1001, 18:19-24; EX2031, ¶48. The identities of other blood constituents such as proteins, albumin, urea, creatine, or nitrates, are recognized through SWIR optical techniques, including pattern matching libraries and algorithms. EX1001 at 20:24-32; EX2031, ¶49.

The specification of the '790 Patent describes distinguishing between the identities of different materials such as gypsum, painted structures, from other materials, such as plant life, soil, and trees. EX1001, 54:32-59; EX2031, ¶51. This identification is achieved by active remote sensing which references the chemical signature of data from a spectral library in order to identify materials. EX1001, 54:32-59. In other words, the '790 Patent discloses processes for "identification of objects based on their chemical signature." EX1001, 54:58-59; EX2031, ¶51.

Identification of blood constituents of interest may be improved by techniques described in the '790 Patent. EX1001, 21:7-28; EX2031, ¶50. One technique comprises the use of a higher light level or intensity to improve the signal to noise

ratio. EX1001, 21:11-13; EX2031, ¶50. Another uses mathematical modeling and signal processing methodologies to reduce interference—which accentuates differences between spectra. EX1001, 21:13-22; EX2031, ¶50. "In addition, by using a wider wavelength range and using more sampling wavelengths may improve the ability to discriminate one signal from another." EX1001 at 21:22-28; EX2031, ¶50.

III. SUMMARY OF PETITIONERS' REFERENCES

Petitioners' challenge to the '790 Patent rests on a flawed theory of obviousness that improperly reconstructs the invention with hindsight. Their arguments fail because the cited prior art addresses fundamentally different problems, and even if combined, would not yield a system resembling the claimed inventions which identifies an object. Petitioners have challenged claim 7 of the '790 Patent as allegedly obvious in Grounds 1-2, which rely on Lisogurski and Carlson.

A. Lisogurski (EX1025) (Grounds 1-2)

Lisogurski describes a non-invasive physiological monitoring system for use in a doctor's office that uses pulse oximetry to measure blood oxygen saturation. EX1025, 3:61-4:5; EX2031, ¶59. Among the components in the system shown in FIG. 3, only the sensor unit 312 is worn by a user.

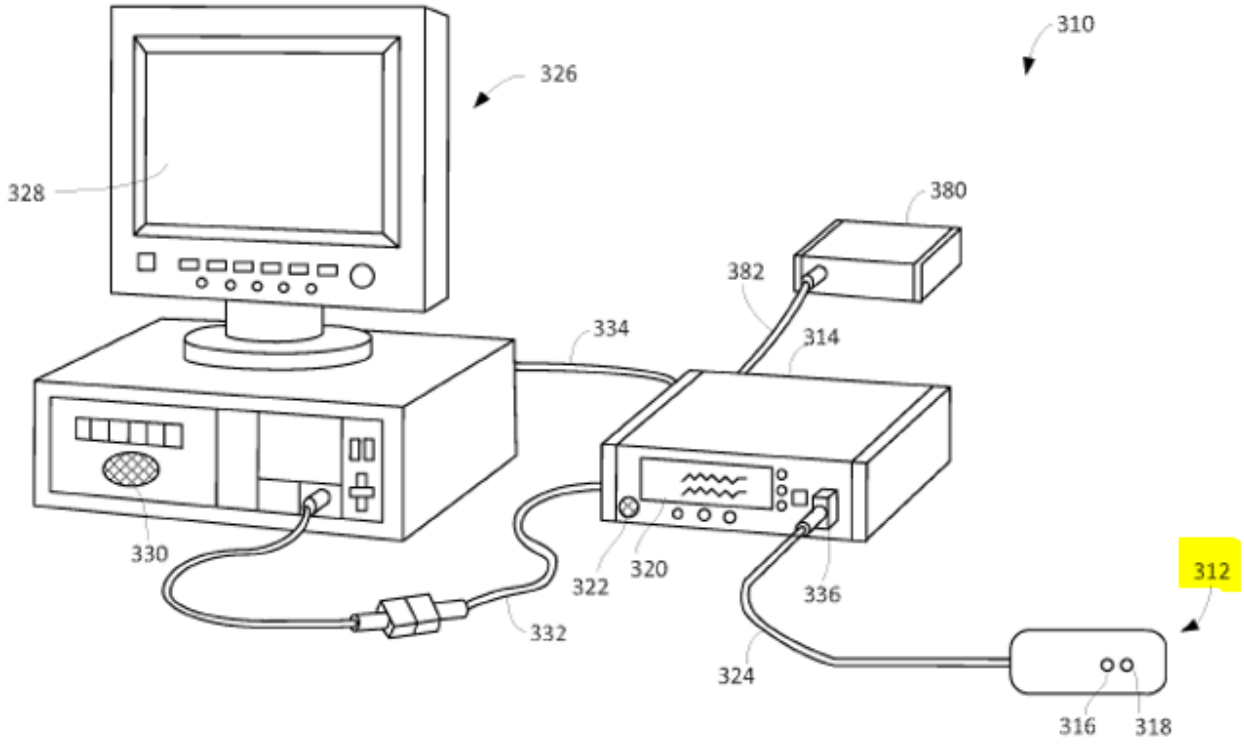

FIG. 3

EX1025, FIG. 3 (annotated)

The remaining stationary components that are not worn by the user perform other tasks, like data calculations, displaying information, and calibration. EX1025, 17:54-18:15, 18:32-67; EX2031, ¶60.

Lisogurski uses semiconductor emitters having different wavelengths to illuminate tissue, and a photodetector receives light and converts it into an electrical signal. EX1025, 4:42-62; EX2031, ¶61. Based on known differences in wavelength absorption of oxyhemoglobin or deoxyhemoglobin, Lisogurski compares the

intensities at the differing wavelengths to estimate blood oxygen saturation. EX1025 at 24:58-25:5; EX2031, ¶61.

B. Carlson (EX1028) (Ground 2)

Carlson describes an optical pulse oximeter for non-invasive measurement of pulsation and blood oxygen saturation. EX1028, ¶[0002]; EX2031, ¶63. More specifically, Carlson is directed to an ear-clip for telemedicine and patient-controlled self-testing settings. EX1028, ¶¶[0002], [0004], [0032]-[0033], [0048]-[0049]; EX2031, ¶63.

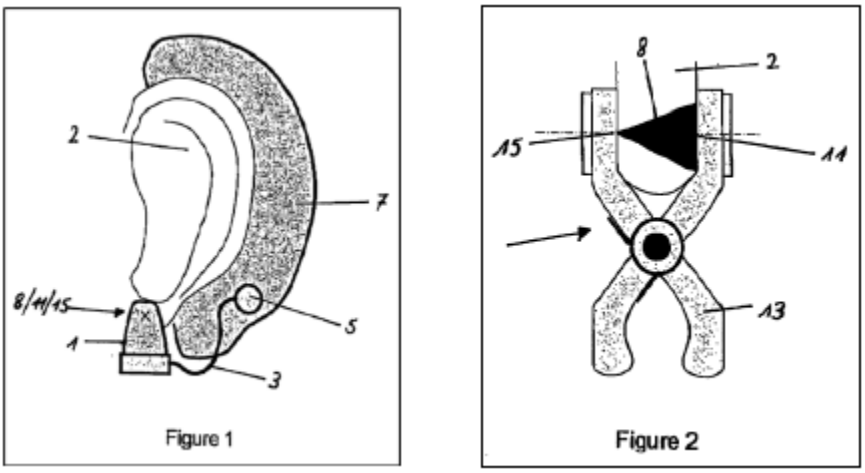

EX1028, FIGS. 1-2

Carlson describes optical and/or electronic means to improve signal to noise and signal to background performance by using beam shaping optical elements, such as diffractive or refractive lenses, to direct light into tissue and the photon detecting element. EX1028, ¶¶[0010], [0013]-[0014]; EX2031, ¶65. Finally, Carlson describes module packaging arrangements integrating these optical elements.

EX1028, ¶¶[0041], [0062]; EX2031, ¶65.

IV. LEVEL OF SKILL IN THE ART

Petitioners propose the following definition for a POSITA in relation to the '790 Patent:

> a POSITA would have [had] a good working knowledge of optical sensing techniques and their applications, and familiarity with optical design and signal processing techniques. Such a person would have obtained such knowledge through an undergraduate education in engineering (electrical, mechanical, biomedical, or optical) or a related field of study, along with relevant experience studying or developing physiological monitoring devices…in industry or academia.

Petition, 15-16 (internal citations omitted). For purposes of this Preliminary Response, Patent Owner adopts Petitioner's proposed level of skill in the art. EX2031, ¶¶53-56.

V. CLAIM CONSTRUCTION

Petitioners contend that all terms/phrases in the challenged claims do not require construction and should be afforded their plain and ordinary meanings. Petition, 16-18. Patent Owner agrees that claim construction is not necessary at this time for the Board to find that Petitioners did not meet their burden for institution. *See Nidec Motor Corp. v. Zhongshan Broad Ocean Motor Co.*, 868 F.3d 1013, 1017 (Fed. Cir. 2017). Patent Owner reserves the right to seek constructions of these terms in litigation or if institution is granted, and to further respond to any constructions proposed by Petitioners. However, Petitioners' approach to claim construction

violates the Board's rules and warrants denial.

A. The Petition Should Be Denied Because Petitioners Take Inconsistent Claim Construction Positions Without Explanation

The Board's rules require that the petition sets forth "[h]ow the challenged claim is to be construed." 37 C.F.R. § 42.104(b)(3). "[W]hen a petitioner takes alternative positions before the Board and a district court, that petitioner should, at a minimum, explain why alternative position are warranted." *Revvo Techs.*, IPR2025-00632, Paper 20 at 3-4. This rule "ensure[s] that the Board correctly construes claim terms and to minimize inconsistency in claim construction between forums." *Id*. at 4.

Petitioners acknowledge that "[i]n the Texas Case, Defendants identified certain terms of the '790 as potentially indefinite." Petition, 16 n.3 (citing Ex.1023, 243-244). Specifically, Petitioners contend in the Texas Case that the following terms are indefinite:

Term	Relevant Claim(s)
"a plurality of detectors that are spatially separated from each other"	7
"increase the signal-to-noise ratio by comparing the first signal and the second signal"	7
"wherein the wearable device is at least in part configured to identify an object"	7
"wherein the detection system is configured to be synchronized to the light source"	7

EX1023, 243-44.

Yet in this IPR, Petitioners take a different position and apply the plain and ordinary meaning to these same terms. Petition, 16-18. Petitioners' only explanation for its inconsistent positions across different forums is a conclusory footnote asserting that "[r]egardless of the outer bounds of these limitations, the prior art discloses the indisputable scope of these limitations." Petition, 16 n.3 (citing EX1003, ¶¶66-67); *see also* Petition, 33, n. 7; *id.*, 34, n. 8; *id.*, 39, n. 9; *id.*, 40, n. 11. Dr. Anthony similarly fails to explain the inconsistency, merely repeating the Petition's conclusory assertions. EX1003, ¶¶66-67.

The Board should deny institution because Petitioners failed to adequately explain why certain terms should be afforded their plain and ordinary meaning in this IPR while simultaneously contending that they are indefinite in district court. *Tesla, Inc. v. Intellectual Ventures II LLC*, IPR2025-00340, Paper 18 at 3-5 (PTAB Nov. 5, 2025) (informative) (denying institution where petitioner argued that claim term was indefinite in district court but adopted patent owner's plain and ordinary meaning construction in its petition).

B. Limitation [7.m]: "to identify an object"

Petitioners acknowledge that in a prior decision concerning related U.S. Patent No. 10,517,484 ("the '484 Patent"), the Board construed the phrase "to identify an object" to mean "to recognize or establish an object as being a particular thing." Petition, 17; EX1015, 8-10. The Federal Circuit affirmed the Board's

construction on appeal. *Apple Inc. v. Omni MedSci, Inc.*, No. 2023-1034, 2024 WL 3084509, at *3 (Fed. Cir. June 21, 2024). While Petitioners state that they "do not believe" this term "need[s] to be construed here" (Petition, 16) the Board should construe the phrase "to identify an object" in claim 7 of the '790 Patent consistent with the same phrase in the '484 Patent because (1) the Federal Circuit affirmed that construction and (2) the prior art fails to disclose or render obvious "identify[ing] an object" under this construction. *Infra*, §VI; EX2031, ¶¶67-70.

In construing this phrase for the '484 Patent, the Board correctly recognized that the terms "identify" and "detect" have different meanings such that the phrases "identify an object" and "detect an object" do not have the same meaning. EX1015, 9-10. The Board construed "identify an object" to mean "to recognize or establish an object as being a particular thing," and construed "to detect an object" to mean "to discover or notice the existence or presence of something." *Id*., 10. The Federal Circuit agreed "that 'identifying an object' and 'detecting an object' have different meanings." *Apple*, 2024 WL 3084509, at *5.

C. Other Board and District Court Constructions

Petitioners note that in another proceeding for a related patent, the Board declined to construe "plurality of lenses." Petition, 17; EX1005, 19-20; EX1008 at 9-10. Similarly, in a prior district court litigation, the court determined that the term "lenses" should be given its "plain and ordinary meaning without the need for further

construction." Petition, 17; EX1018, 10-13 (construing "plurality of lenses" in claims 5 and 13 of the '533); EX1019, 12-15 (construing "lens" and "one or more lenses" in related patents). Patent Owner agrees that the Board need not construe this term at this time to find that Petitioners failed to meet their burden. *Nidec*, 868 F.3d at 1017; EX2031, ¶¶71-73.

VI. PETITIONERS FAILED TO MEET THEIR BURDEN

Petitioners have not met their burden for Grounds 1-2 because neither Lisogurski nor Carlson teaches identifying an object—they describe only measurement systems that assume the identity of what they are measuring.

In Ground 1, Petitioners argue that Lisogurski's pulse oximetry system renders claim 7 obvious. In Ground 2, Petitioners add Carlson's signal processing improvements. Both grounds fail for the same fundamental reason: measuring a known parameter is not identifying an unknown object. Lisogurski presupposes the presence of hemoglobin and quantifies its oxygenation state using predetermined wavelength ratios. Carlson merely enhances signal quality through optical hardware improvements like beam-shaping lenses and filters.

Neither reference discloses computational means to recognize or establish what an object is—no pattern recognition, no library matching, no material classification. The '790 Patent, by contrast, discloses systems that identify unknown objects through spectral analysis and algorithmic discrimination among multiple

constituents. Because measurement assumes the object is known while identification determines what the object is, and because neither reference performs the claimed identification, Petitions have failed to meet their burden for institution, as discussed in further detail below.

A. Ground 1: Alleged Obviousness Based on Lisogurski (Claim 7)

In Ground 1, Petitioners argue that claim 7 of the '790 Patent is obvious over Lisogurski. Petition, 20. For at least the reasons discussed below, Petitioners failed to meet their burden.

Limitation [7.m] recites "wherein the wearable device is at least in part configured to identify an object." EX1001, 87:32-33. As discussed above, the phrase "to identify an object," when properly construed, means "to recognize or establish an object as being a particular thing." *Supra*, §V.B; EX1015, 8-10. Under the claim construction, there is a difference between identifying an object and detecting an object, the latter of which means "to discover or notice the existence or presence of something." *Id*. To illustrate by way of example, a scale measures weight without identifying the object on the scale. As another example, a pH meter measures acidity without identifying which acids or bases are present.

The '790 Patent exemplifies identification through discriminating among multiple unknown constituents. The specification describes identification as distinguishing between different materials or constituents using spectral analysis,

pattern matching algorithms, and spectral signature libraries. EX1001, 18:20-27; 78:51-79:12; EX2031, ¶80. For example, the '790 Patent explains that "[t]o identify the blood constituents of interest…the spectrum may be correlated with a library of known spectra." EX1001, 18:19-24; EX2031, ¶48. Different blood constituents—glucose, triacetin, ascorbate, lactate, alanine, and urea, proteins, albumin, urea, creatine, and nitrates—that must be identified and distinguished from one another. EX1001, 18:10-27; 20:24-32; EX2031, ¶48. This identification is achieved through "mathematical modeling and signal processing methodologies" and "using more sampling wavelengths [to] improve the ability to discriminate one signal from another." EX1001, 21:22-24; EX2031, ¶49. The specification emphasizes that this is "identification of objects based on their chemical signature." EX1001, 54:58-59; EX2031, ¶51.

Based on the foregoing, a POSITA would understand that identification requires determining what the object is, not measuring an assumed object's parameters. EX2031, ¶¶80-81, 90. This is what distinguishes identifying an object from merely detecting something or measuring a parameter of a presumed object. EX1015, 10. To identify an object, the system must determine what the object is, recognizing it as a particular thing. EX2031, ¶¶80-81. This is distinct from assuming an object and simply quantifying one of its attributes. *Id*.

Lisogurski does not disclose identifying an object as claimed because

measuring a known parameter does not meet the claim construction. EX2031, ¶¶86-88. Lisogurski's pulse oximeter measures oxygen saturation of hemoglobin—a known, presumed constituent—without identifying what blood constituents are present. *Id*. Lisogurski describes a pulse oximetry system that measures blood oxygen saturation. EX1025, 3:61-4:41; EX2031, ¶86. The system emits light at two wavelengths, detects the transmitted or reflected light, and calculates oxygen saturation based on the ratio of absorbed light with a detector. EX1025, 4:42-62, FIG. 4; EX2031, ¶86.

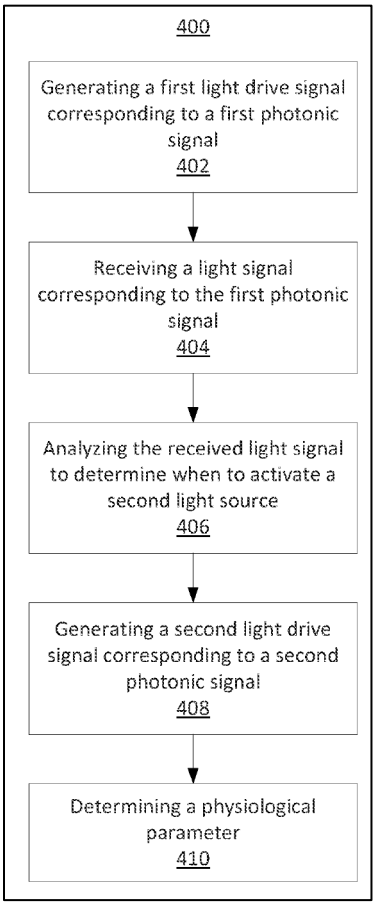

EX1025, FIG. 4

Lisogurski operates on the presupposition that hemoglobin is present. EX1025, 4:35-41; EX2031, ¶87. It uses known characteristics of that single constituent to estimate oxygen saturation. EX1025, 4:35-41; EX2031, ¶87. Lisogurski does not disclose or suggest any step where the system attempts to determine the identity of a substance or object—it at most assumes the identity of the object from the outset. EX1025, 4:35-41; EX2031, ¶¶87-88.

The oximetry technique described in Lisogurski is not a blood identification technique. EX2031, ¶87. Oximetry exclusively focuses on one blood constituent, hemoglobin, and measuring the ratio of oxygenated and deoxygenated hemoglobin, without discriminating hemoglobin from other blood constituents. EX1025, 3:61-4:3; EX2031, ¶87. This technique applies pre-established assumptions that oxygenated and deoxygenated hemoglobin are inherently present in blood and that the absorbance of specific wavelengths has a mathematical correlation to blood oxygen saturation. EX2031, ¶¶87-88. An oximeter is configured to know what blood constituent it is measuring; it does not recognize or establish the identity of what it is measuring. *Id*.

Rather than addressing Lisogurski's disclosures, the Petition relies almost exclusively on the Board's remand decision concerning the related '484 Patent ("the '484-RFWD"). Petition, 40-41. Petitioners' reliance on the '484-RFWD is flawed for two reasons. First, the '484-RFWD is not final and does not have any preclusive

effect because it is currently on appeal at the Federal Circuit. EX2012; *United Therapeutics Corp. v. Liquidia Techs., Inc.*, 74 F.4th 1360, 1372 (Fed. Cir. 2023) ("[A]n IPR decision does not have collateral estoppel effect until that decision is affirmed or the parties waive their appeal rights"). The '484-RFWD does not obviate Petitioners' burden to prove that Lisogurski discloses limitation [7.m] under the claim construction in this proceeding.

Second, Petitioners fail to proffer adequate testimony from Dr. Anthony. Initially, Dr. Anthony includes the same quote from the '484-RFWD as the Petition. EX1003, ¶187 (quoting EX1016, 4-7); Petition, 41 (quoting same). Dr. Anthony then states that this finding "is consistent with my opinions regarding this '484 limitation provided in my Prior '484 Declaration, which I incorporate by reference as if fully set forth herein." EX1003, ¶187 (citing EX1010, ¶¶220-22). The Petition does not cite the relevant paragraphs of EX1010. *See*, e.g., Petition, 40-41.

The Petition and Dr. Anthony's attempted incorporation by reference of testimony from another proceeding is improper under the Board's rules. 37 C.F.R. § 42.6(a)(3); *Cisco Sys., Inc. v. C-Cation Techs., LLC*, IPR2014-00454, Paper 12 at 9-10 (PTAB Aug. 29, 2014) (informative) (finding that "citing the [expert] Declaration to support conclusory statements that are not otherwise supported in the Petition also amounts to incorporation by reference"); *3M Co. v. Evergreen Adhesives, Inc.*, 860 F. App'x 724, 728 (Fed. Cir. 2021) (finding that the Board did not abuse its discretion

in disregarded incorporated by reference arguments).

In any event, Dr. Anthony's prior testimony concerning the '484 Patent does ***not*** support the Board's findings in the '484-RFWD that Petitioners rely on. In the IPR for the '484 Patent, the Petitioner, Apple, initially argued that Lisogurski meets the "identify an object" requirement because it "can identify an object, such as an ear or a wrist, because it can distinguish when it has fallen off (probe off error)." EX1015, 50. Patent Owner proposed its claim construction for "identify an object" in its Patent Owner Response. *Id*. In its Reply, Apple abandoned its original theory and advanced a new theory attempting to address Patent Owner's construction. *Id*., 51. After initially finding that Apple did not meet its burden (*id*., 51-52), following remand from the Federal Circuit, the Board found in the '484-RFWD that "Lisogurski teaches identifying an object, i.e., the blood constituent oxyhemoglobin" (EX1016, 7).

Dr. Anthony's declaration for the '484 Patent only addresses Apple's original theory that Lisogurski identifies an object based on the "probe off error" feature and does ***not*** opine that Lisogurski identifies an object because it identifies the blood constituent oxyhemoglobin. EX1010, ¶¶220-22.[3] Petitioners do not rely on Apple's

[3] One of the issues in the appeal of the '484-RFWD is that Dr. Anthony's testimony did not support the Board's findings. EX2039, 20, 22-23.

original "probe off error" theory in this IPR. Petition, 40-41. Petitioners failed to meet their burden because Dr. Anthony's testimony that merely quotes the '484-RFWD is insufficient to demonstrate unpatentability. *Alexsam, Inc. v. IDT Corp.*, 715 F.3d 1336, 1348 (Fed. Cir. 2013) (explaining that expert testimony is normally required "not only to explain what the prior-art references disclosed, but also to show that a person skilled in the art would have been motivated to combine them"); *see also Xerox Corp. v. Bytemark, Inc.*, IPR2022-00624, Paper 9 at 15-17 (PTAB Aug. 24, 2022) (precedential) (testimony restating "the petitioner's arguments without any additional supporting evidence or reasoning" is accorded "little weight").

While not explained in the Petition (Petition, 40-41), Dr. Anthony acknowledges Petitioners' indefiniteness argument for this term in the Texas Case and attempts to explain why Lisogurski nonetheless discloses identifying an object as claimed in the '790 Patent (EX1003, ¶¶189-91). Dr. Anthony first points to the '790 Patent's teaching that "[v]arious signal processing methods may be used to identify and quantify the concentration of cholesterol 876 and/or glucose 877, or some of the other blood constituents." EX1003, ¶190; EX1001, 21:3-6. He then contends that Lisogurski's discussion of determining blood saturation is "[c]onsistent with" the '790 Patent's specification. EX1003, ¶191 (citing EX1025, 4:36-62). To the extent this discussion is meant to address how Lisogurski allegedly meets the proper claim construction, it fails for two reasons.

First, Dr. Anthony's comparison between the '790 Patent specification and Lisogurski is not the proper comparison for patentability. *See Graham v. John Deere Co. of Kansas City*, 383 U.S. 1, 17 (1966) (obviousness requires determining "differences between the prior art and the ***claims*** at issue"). Second, Dr. Anthony's assertion that Lisogurski teaches identifying blood constituents is unsupported by Lisogurski's text. Although Dr. Anthony references 4:36-62 to explain that "a blood constituent could be identified and distinguished from others," Lisogurski does not support this reading. EX1003, ¶191. Lisogurski's description at 4:36-62 does not mention identifying and distinguishing a blood constituent from others. EX1025, 4:36-62; EX2031, ¶89. Instead, it describes a system that will "estimate the blood oxygen saturation of hemoglobin"—a specific and known constituent—and determine "physiological parameters." EX1025, 4:36-62; EX2031, ¶89.

For at least these reasons, Petitioners failed to meet their burden for Ground 1. One can measure the acidity of a solution without knowing the specific acids or basis present. One can measure the weight of an object without knowing what that object is. Similarly, one can measure the oxygen saturation of blood without identifying which components are present. Lisogurski performs parameter measurement, not object identification. EX2031, ¶¶75-91.

B. Ground 2: Alleged Obviousness Based on Lisogurski in view of Carlson (Claim 7)

In Ground 2, Petitioners argue that claim 7 of the '790 Patent is obvious over Lisogurski in view of Carlson. Petition, 41; EX1003, ¶¶192-207. Petitioners do not contend that Carlson discloses "identify[ing] an object" as required in limitation [7.m]. Petition, 41-45. Instead, Petitioners only rely on Carlson as allegedly teaching limitation [7.d]. *Id*., 44-45. Indeed, Carlson merely describes improvements to enhance pulse oximeter signal quality, not identification methods. EX1028, ¶¶[0011]-[0014]; EX2031, ¶¶95-96. Accordingly, Petitioners failed to meet their burden for at least the same reasons as Ground 1 because Carlson does not remedy the deficiencies of Lisogurski. *Supra*, §VI.A; EX2031, ¶¶94, 97-98.

VII. CONCLUSION

For at least the foregoing reasons, the Petition should be denied as to each of the requested grounds. For brevity, Patent Owner may not have addressed all characterizations of the applied references and the challenged claims and reserves the right to do so should institution be granted. The absence of a response by Patent Owner to any of the arguments presented in the Petition or the associated expert declaration does not constitute a concession to those arguments. The fact that Patent Owner's Preliminary Response has focused on particular arguments does not

constitute a concession that there are no other arguments for patentability of the challenged claims.

Respectfully submitted,

Dated: November 12, 2025 By: /s/ *Jennifer Hayes*

Reg. No. 50,845
Nixon Peabody LLP
300 South Grand Avenue, Suite 4100
Los Angeles, CA 90071-3151
Tel. 213-629-6190
Fax 213-629-6001

Lead Counsel for Patent Owner

CERTIFICATION OF WORD COUNT

Pursuant to 37 C.F.R. § 42.24(d), the undersigned hereby certifies that the foregoing Patent Owner's Preliminary Response is produced using a 14-point Times New Roman font and contains approximately 4,260 words, which is less than the 14,000 total words permitted by the U.S. Patent Trial and Appeal Board rules. Counsel relies on the word count of the computer program used to prepare the response on November 12, 2025.

Dated: November 12, 2025 By: /s/ *Jennifer Hayes*

Reg. No. 50,845
Nixon Peabody LLP
300 South Grand Avenue, Suite 4100
Los Angeles, CA 90071-3151
Tel. 213-629-6190
Fax 213-629-6001

Lead Counsel for Patent Owner

CERTIFICATE OF SERVICE

The undersigned hereby certifies that a copy of the foregoing **Patent Owner's Preliminary Response** was served on November 12, 2025, by email:

James L. Davis, Jr.
Hyun-Joong Kim
Fan (Frances) Zhang
Sheppard, Mullin, Richter & Hampton LLP
1540 El Camino Real Suite 120
Menlo Park, CA 94025
Telephone: (650) 815-2600
Fax: (650) 815-2601
CT-SamsungOmniMedsci@sheppardmullin.com
jdavis@sheppardmullin.com
hykim@sheppardmullin.com
fzhang@sheppardmullin.com

Jasjit S. Vidwan
Robert G. Pluta
MAYER BROWN LLP
1999 K Street, NW
Washington, DC 20006-1101
Tel.: 202.263.3065
JVidwan@mayerbrown.com
RPluta@mayerbrown.com

Jared A. Smith
Ricardo J. Bonilla
FISH & RICHARDSON P.C.
12860 El Camino Real, Suite 400
San Diego, CA 92130
Phone: +1 858-678-4702
Fax: +1 858-678-5099
jasmith@fr.com
rbonilla@fr.com

Jack Shaw
CHERRY JOHNSON SIEGMUND JAMES PC
8140 Walnut Hill Lane, Suite 105
Dallas, Texas 75231
Tel: 254-732-2242
Fax: 866-627-3509
jshaw@cjsjlaw.com

Counsel for Petitioners

By: /s/ *Jennifer Hayes*

Counsel for Patent Owner