US 20100217102A1

(19) United States

(12) Patent Application Publication

LeBoeuf et al.

(10) Pub. No.: US 2010/0217102 A1

(43) Pub. Date: Aug. 26, 2010

(54) LIGHT-GUIDING DEVICES AND MONITORING DEVICES INCORPORATING SAME

(76) Inventors: **Steven Francis LeBoeuf**, Raleigh, NC (US); **Jesse Berkley Tucker**, Knightdale, NC (US); **Michael Edward Aumer**, Raleigh, NC (US)

Correspondence Address:
MYERS BIGEL SIBLEY & SAJOVEC
PO BOX 37428
RALEIGH, NC 27627 (US)

(21) Appl. No.: **12/691,388**

(22) Filed: **Jan. 21, 2010**

Related U.S. Application Data

(60) Provisional application No. 61/208,567, filed on Feb. 25, 2009, now abandoned, provisional application No. 61/208,574, filed on Feb. 25, 2009, provisional application No. 61/212,444, filed on Apr. 13, 2009, provisional application No. 61/274,191, filed on Aug. 14, 2009.

Publication Classification

(51) **Int. Cl.**
A61B 5/1455 (2006.01)

(52) **U.S. Cl.** **600/310**

(57) **ABSTRACT**

A monitoring device configured to be attached to the ear of a person includes a base, an earbud housing extending outwardly from the base that is configured to be positioned within an ear of a subject, and a cover surrounding the earbud housing. The base includes a speaker, an optical emitter, and an optical detector. The cover includes light transmissive material that is in optical communication with the optical emitter and the optical detector and serves as a light guide to deliver light from the optical emitter into the ear canal of the subject wearing the device at one or more predetermined locations and to collect light external to the earbud housing and deliver the collected light to the optical detector.

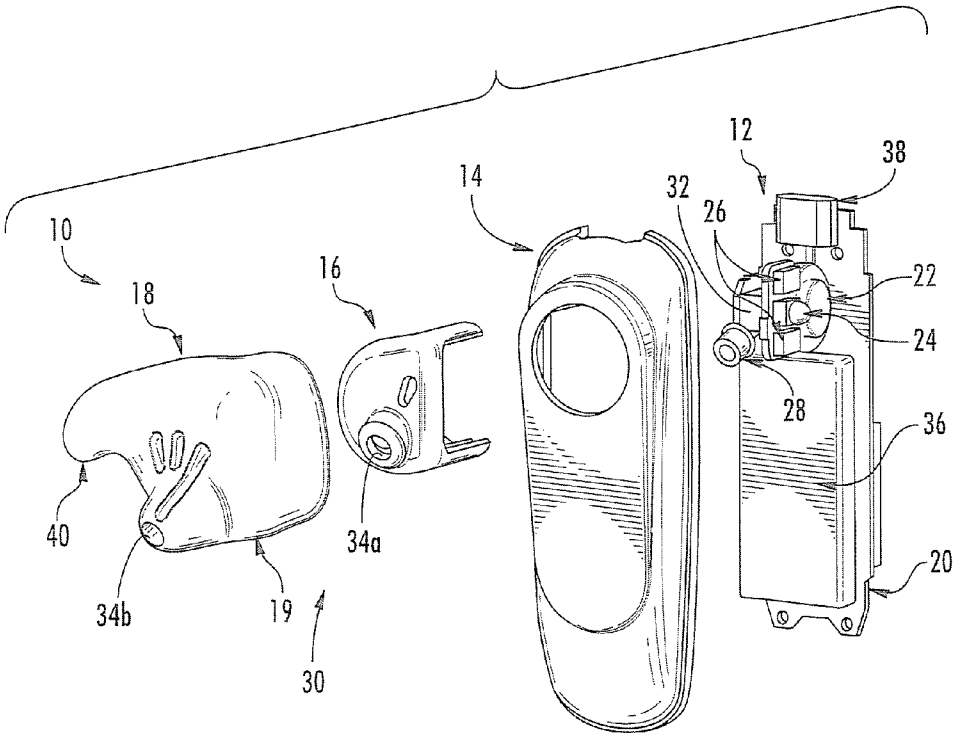

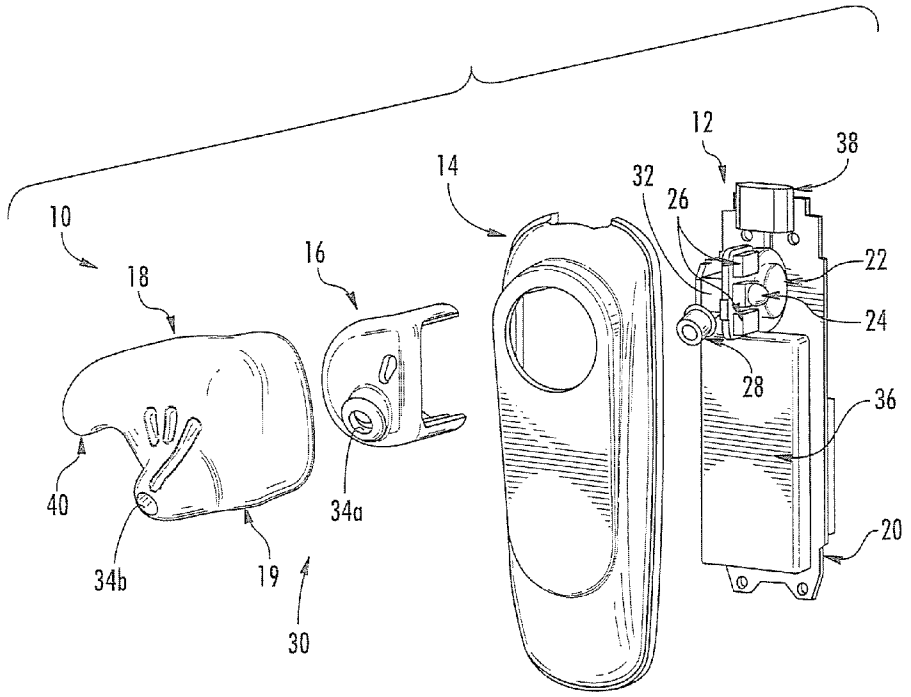

FIG. 1

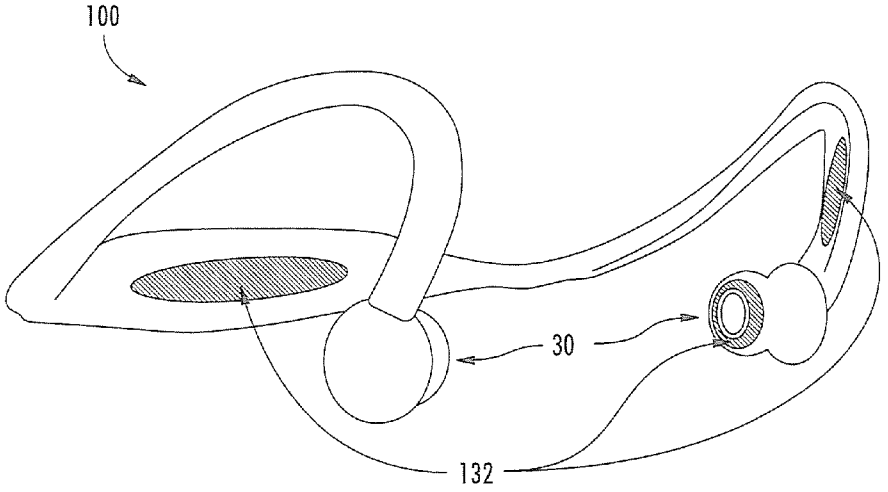

FIG. 2

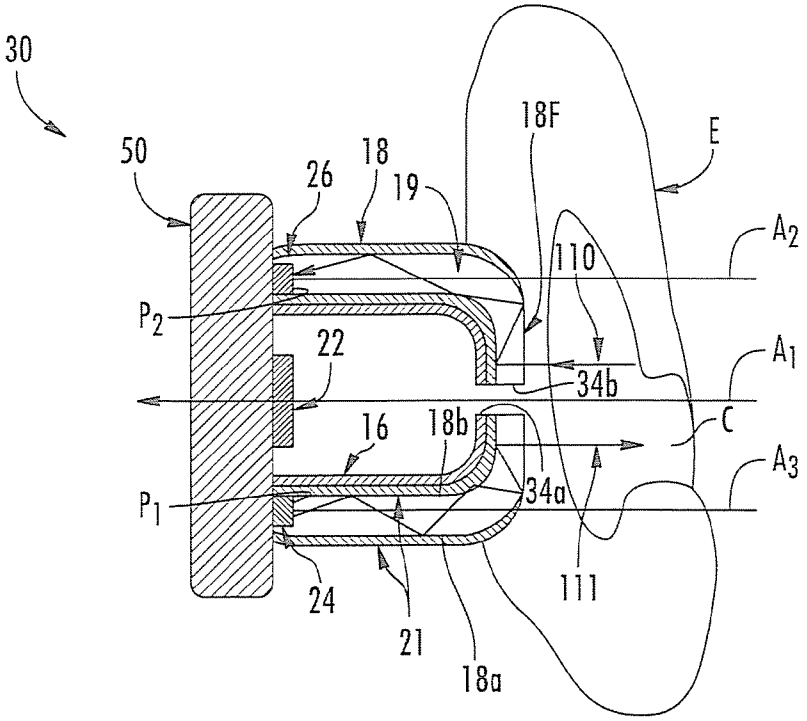
30
50
26
18
19
18F
E
A2
110
P2
22
34b
A1
16
18b
C
A3
P1
34a
24
21
18a
111

FIG. 3

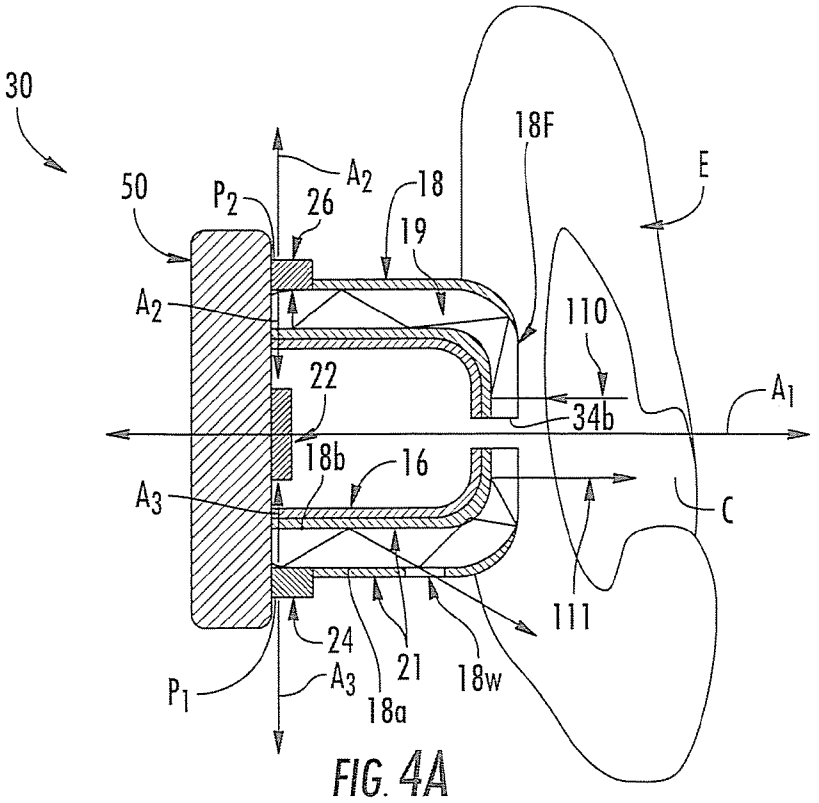
30
18F
E
50
P2
A2
26
18
19
A2
110
22
A1
34b
18b
16
A3
C
111
24
21
18w
P1
A3
18a

FIG. 4A

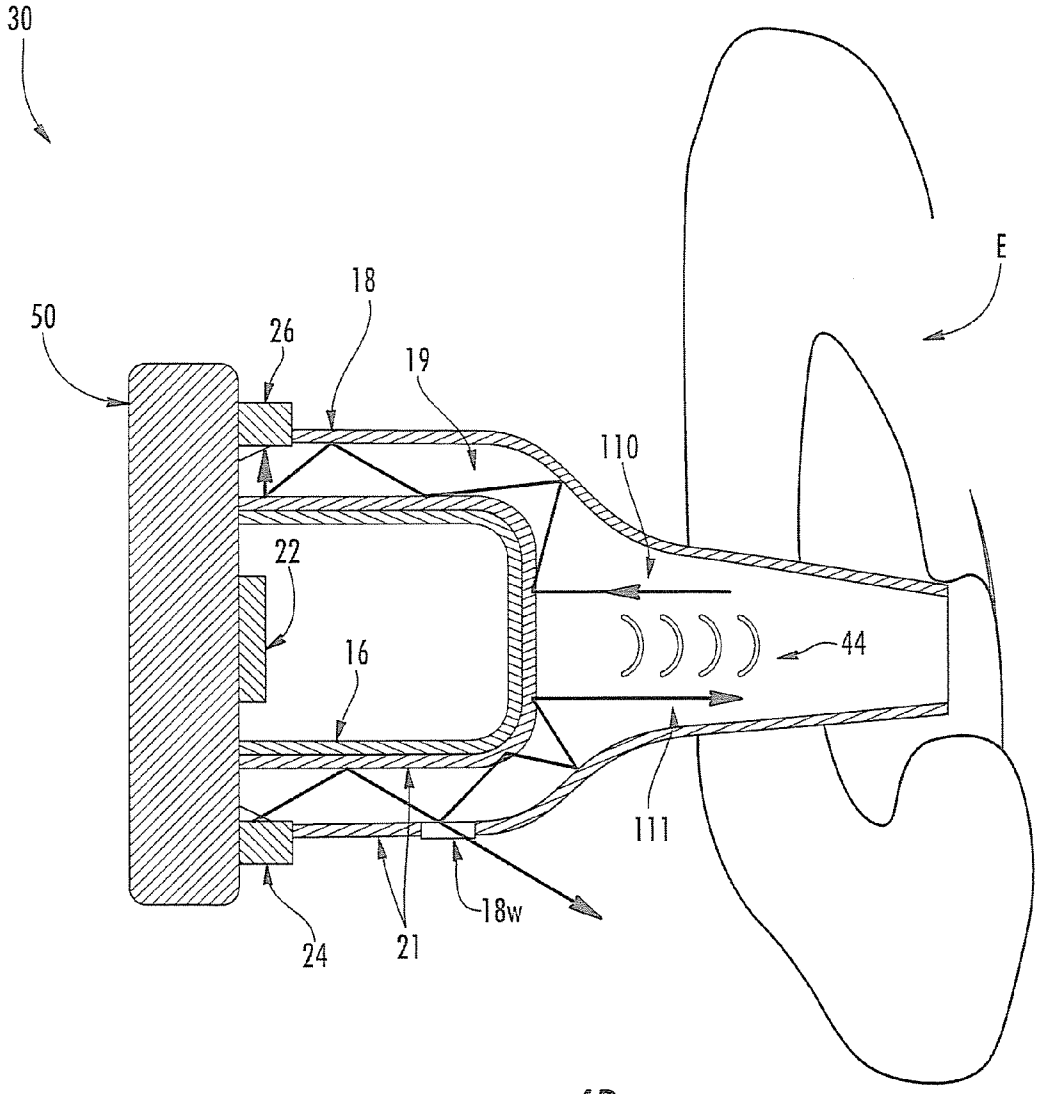

FIG. 4B

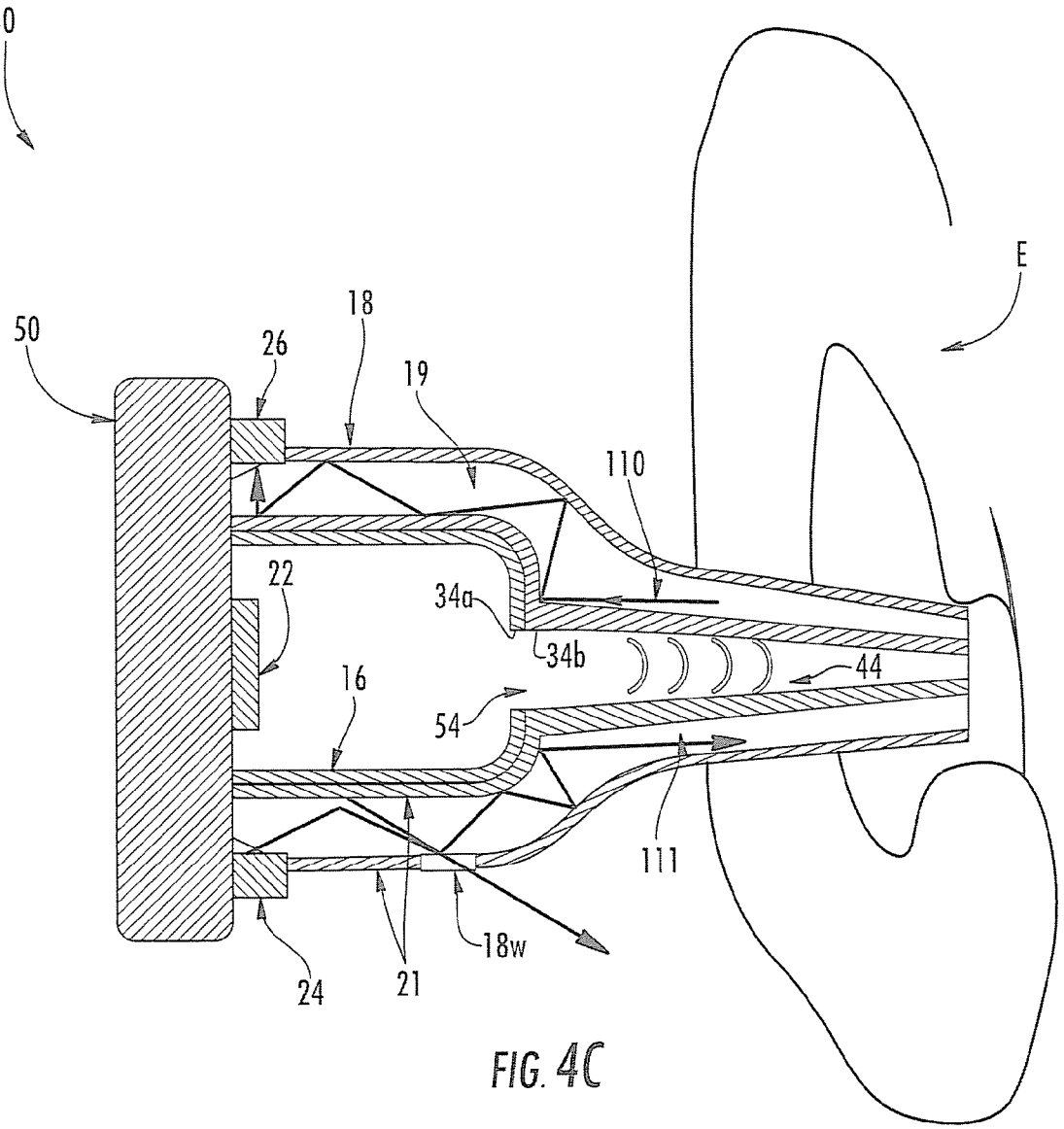

FIG. 4C

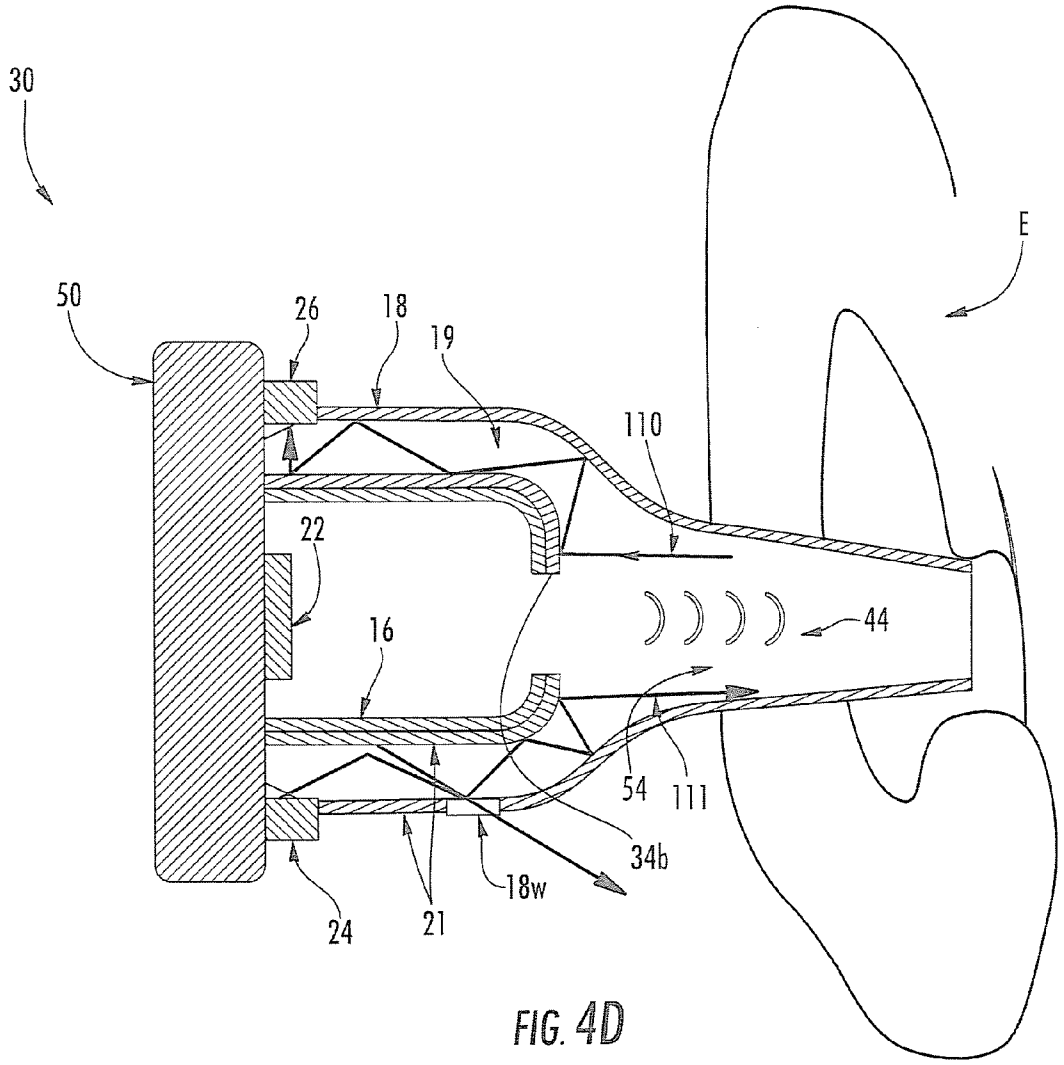

FIG. 4D

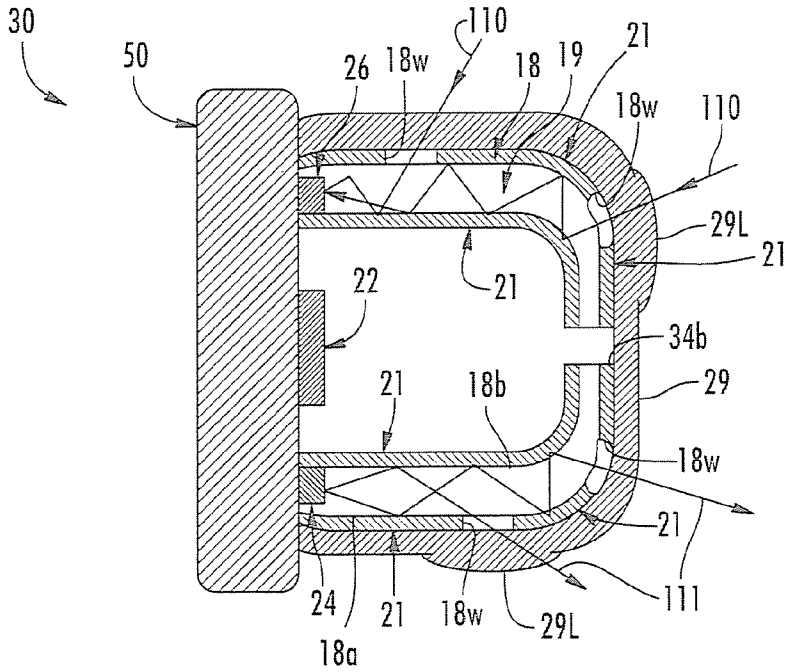
30
50
26
18w
110
18
19
21
18w
110
29L
21
22
21
34b
21
18b
29
18w
21
24
21
18w
29L
111
18a

FIG. 5

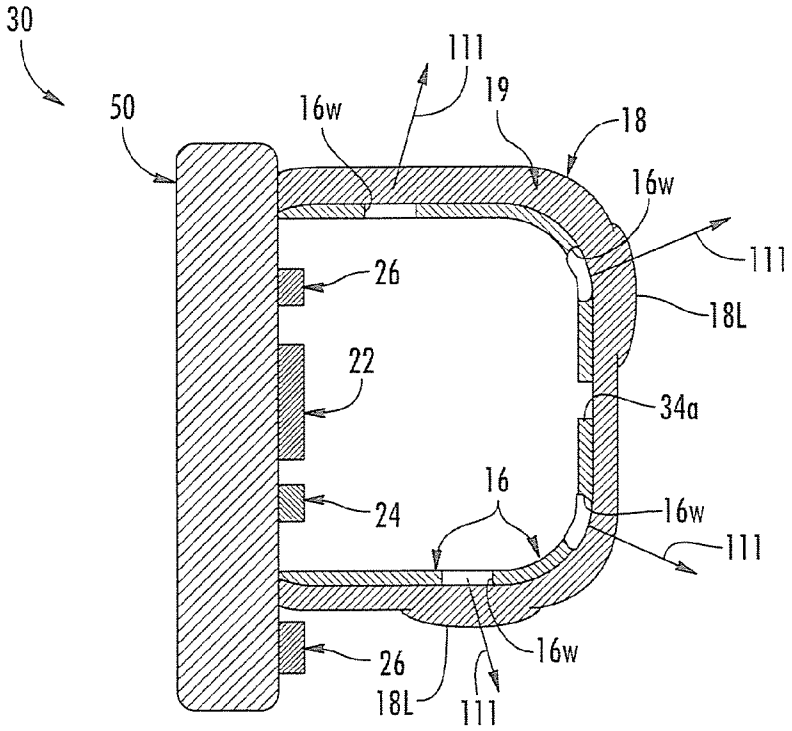
30
50
111
16w
19
18
16w
111
26
18L
22
34a
16
24
16w
111
26
16w
18L
111

FIG. 6

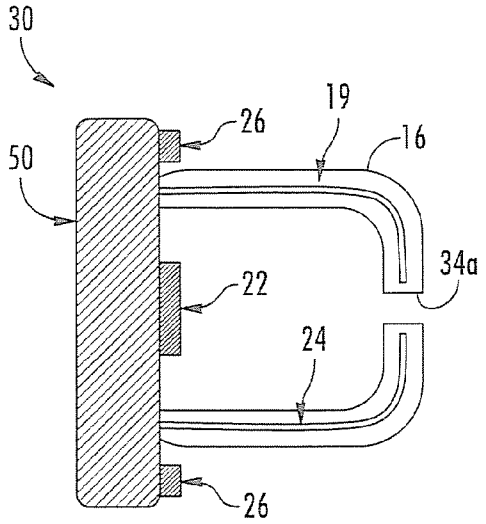

FIG. 7A

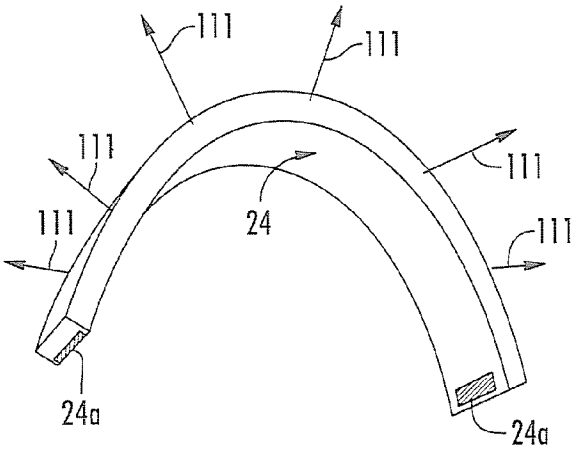

FIG. 7B

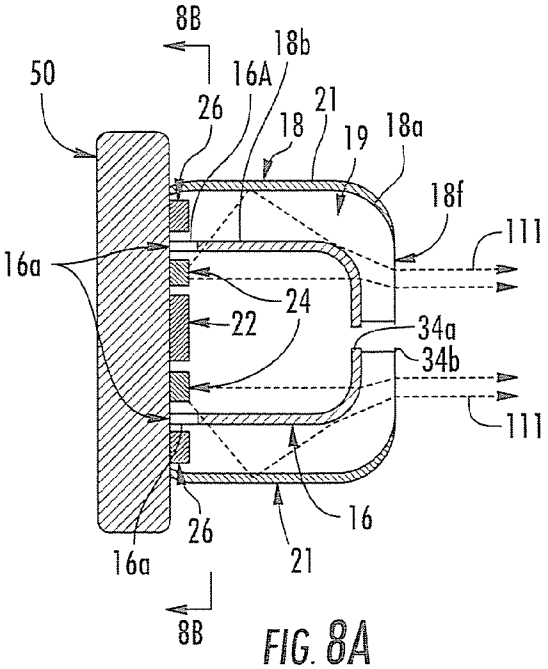

FIG. 8A

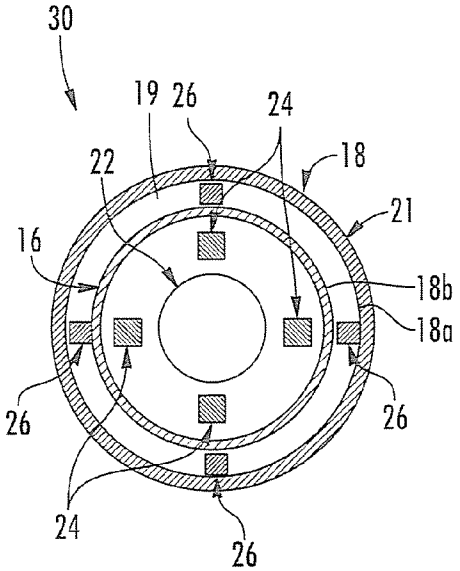

FIG. 8B

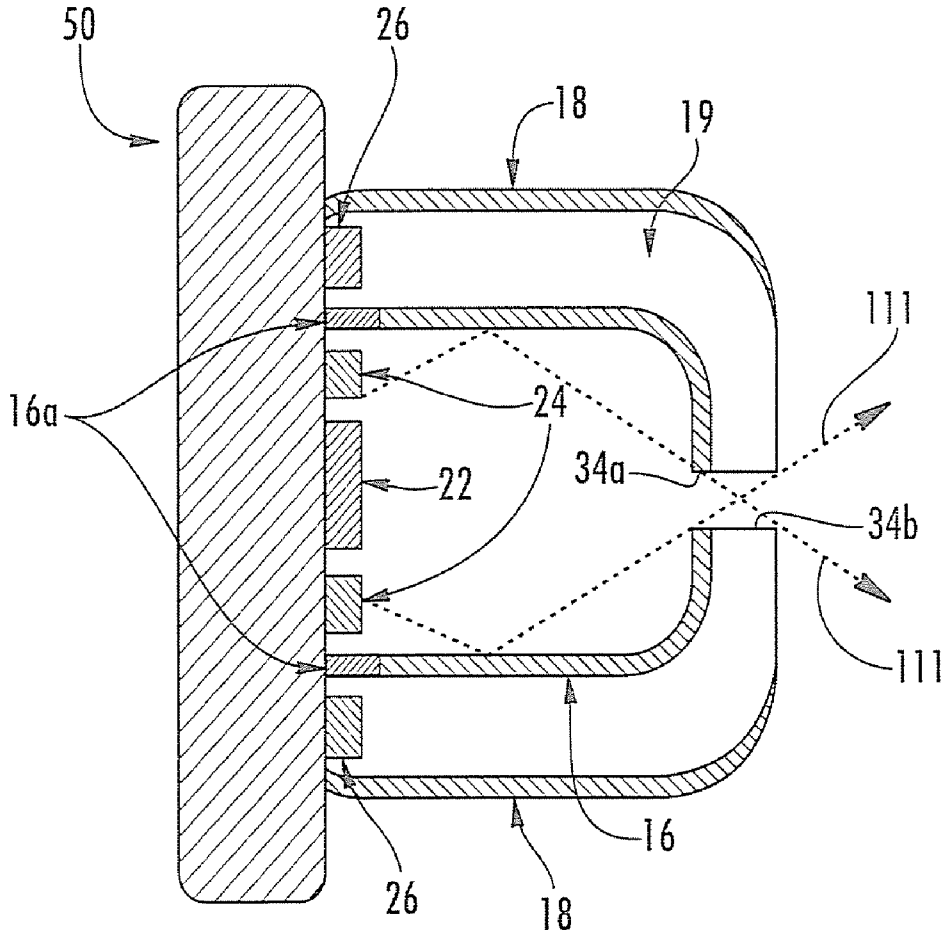

FIG. 8C

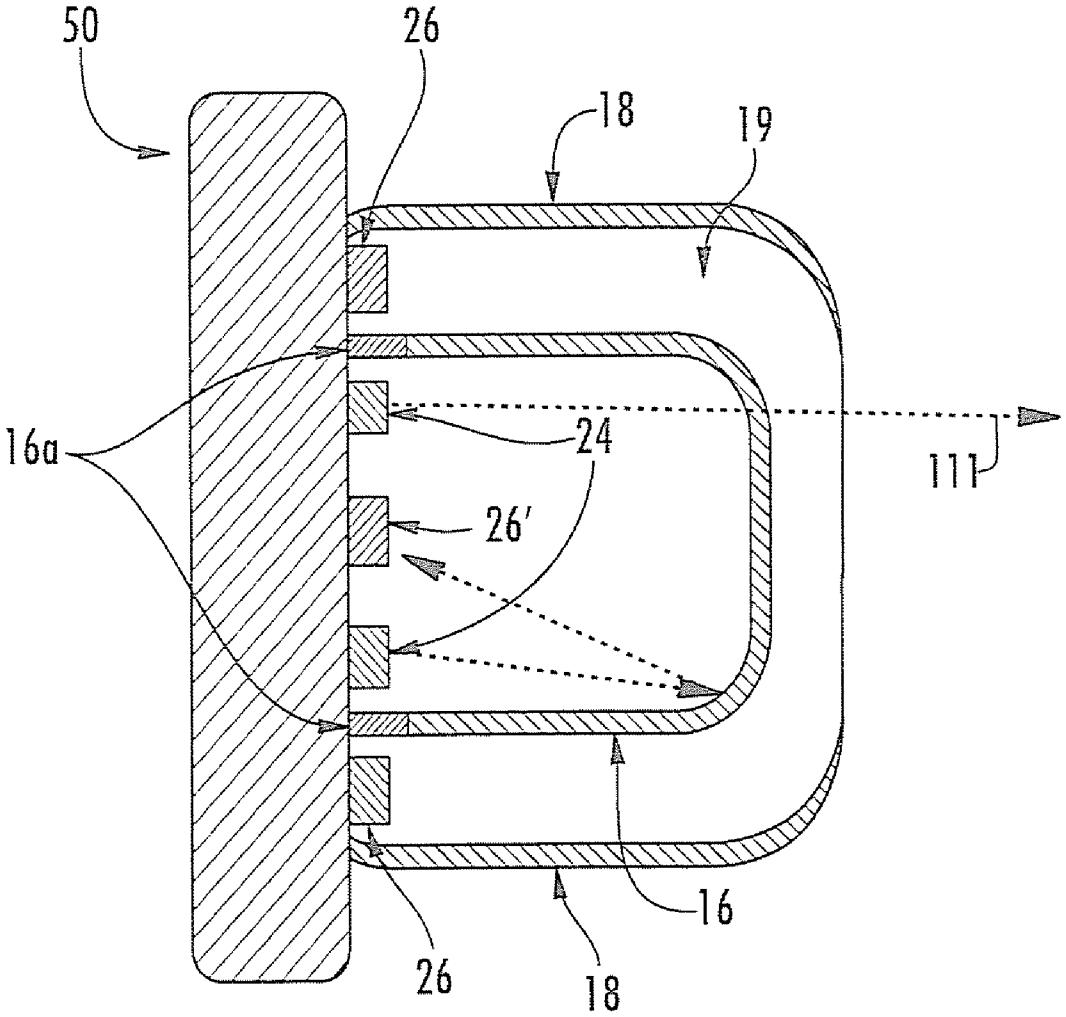

FIG. 8D

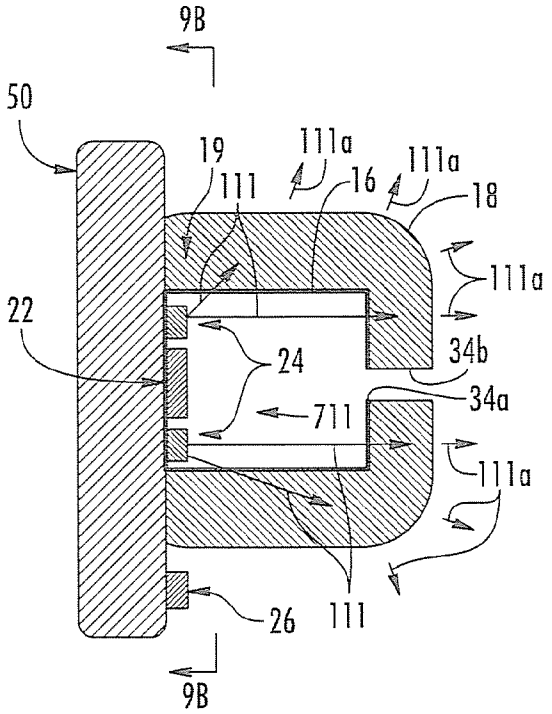

FIG. 9A

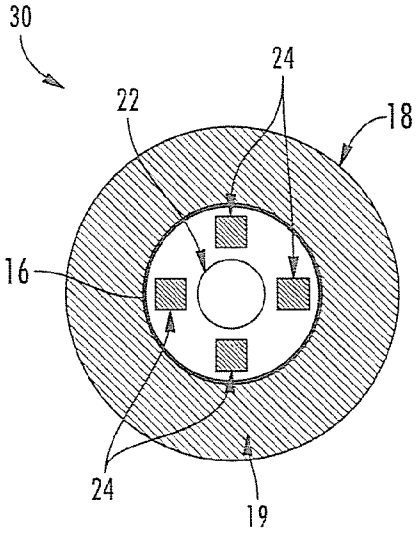

FIG. 9B

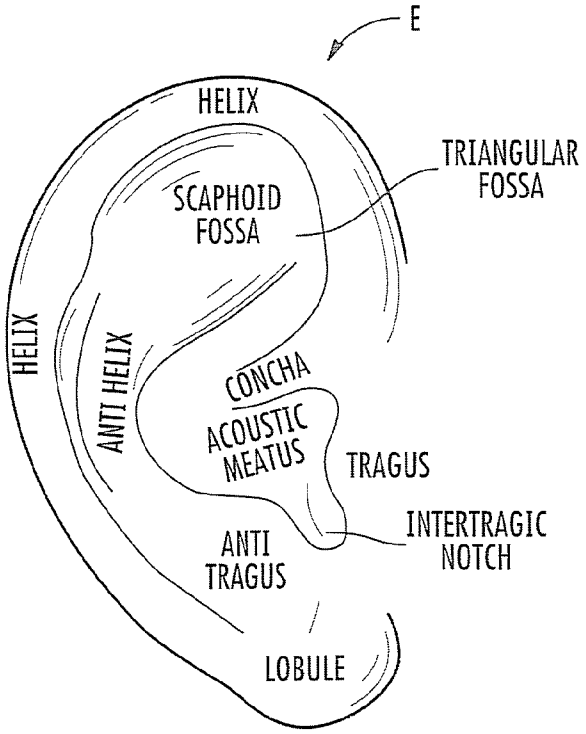

FIG. 10

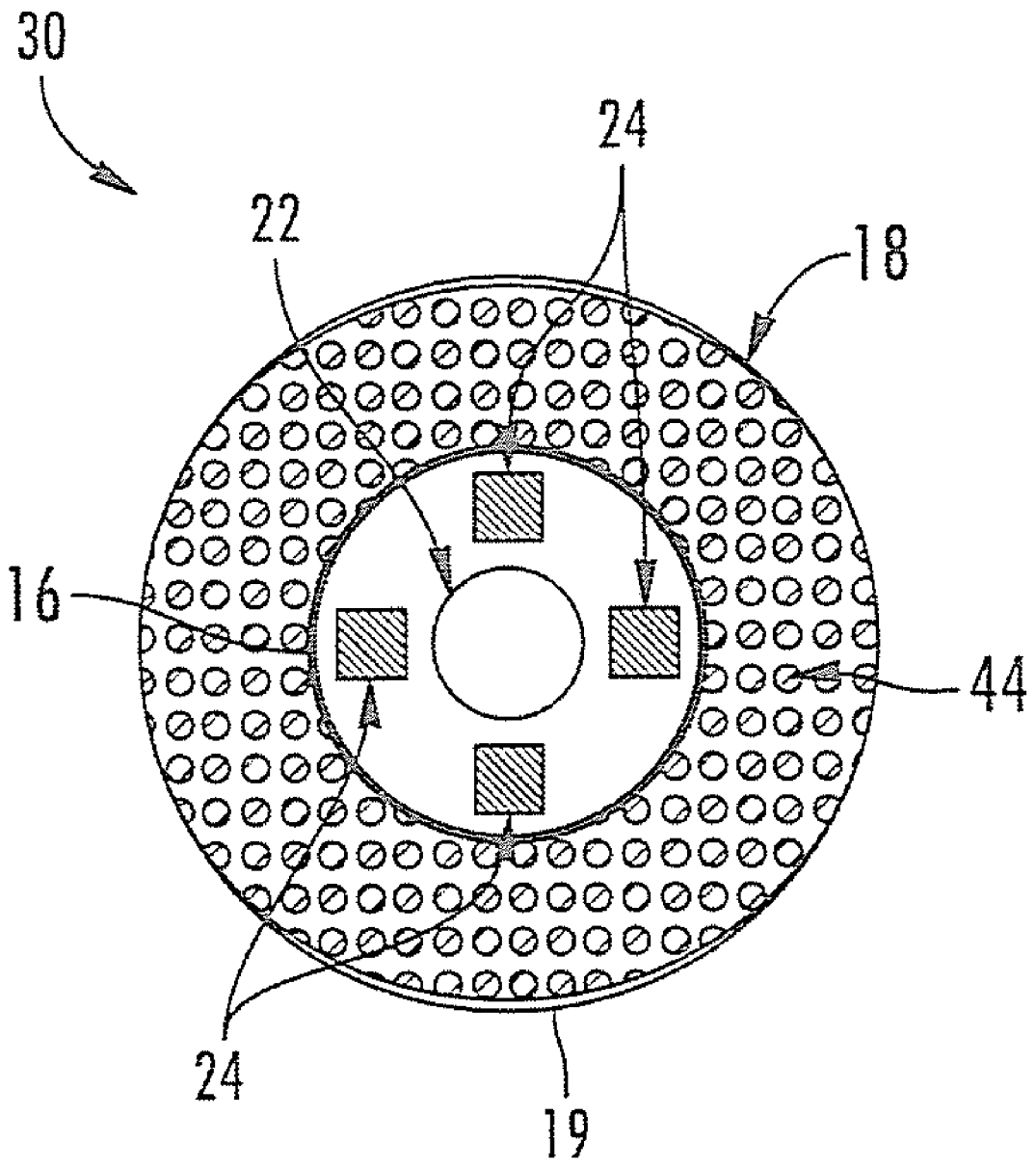

FIG. 9C

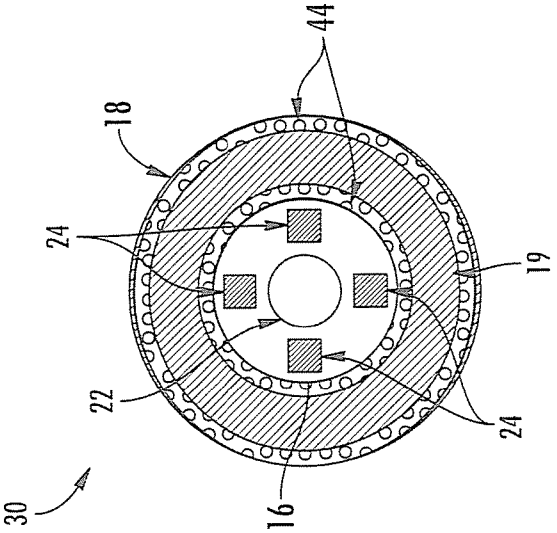
44
18
24
19
22
24
30
16

FIG. 9E

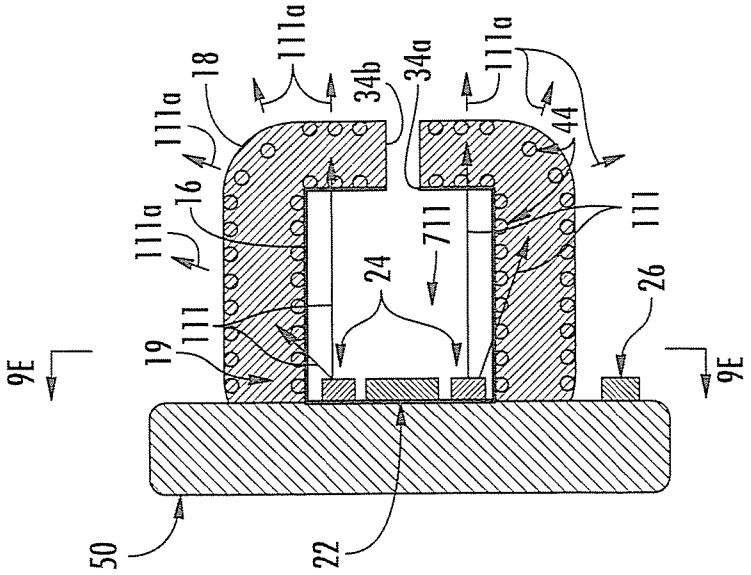
111a
18
111a
34b
34a
111a
44
111a
16
711
111
24
26
111
19
9E
9E
50
22

FIG. 9D

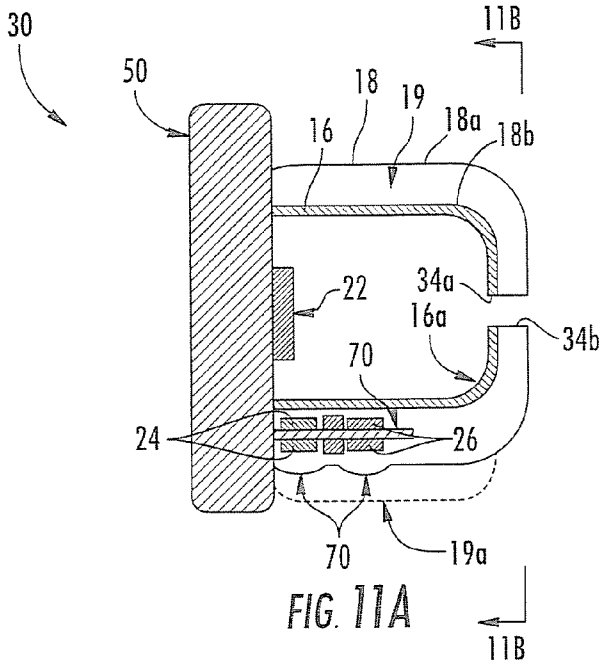

FIG. 11A

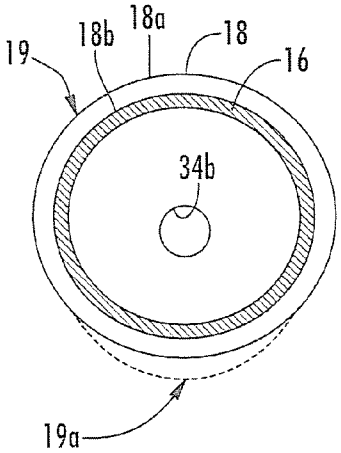

FIG. 11B

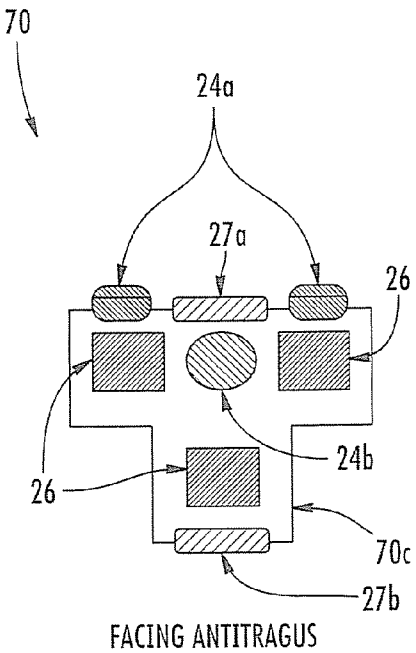

FIG. 12A

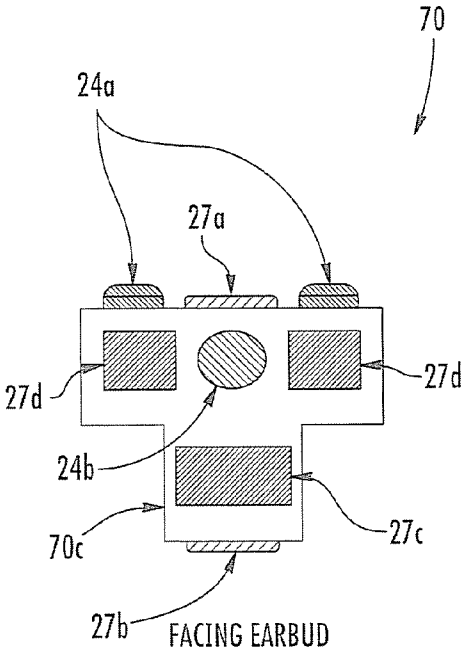

FIG. 12B

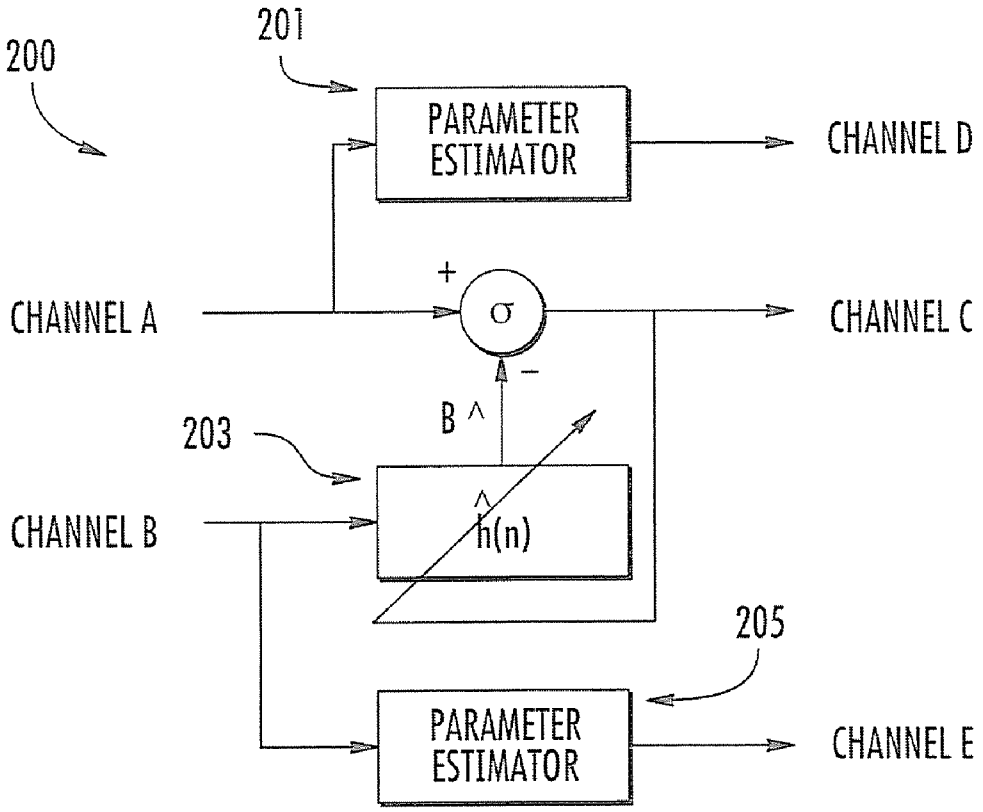
200
201
PARAMETER ESTIMATOR
CHANNEL D
CHANNEL A
+
σ
CHANNEL C
−
B ^
203
CHANNEL B
^
h(n)
205
PARAMETER ESTIMATOR
CHANNEL E

FIG. 13

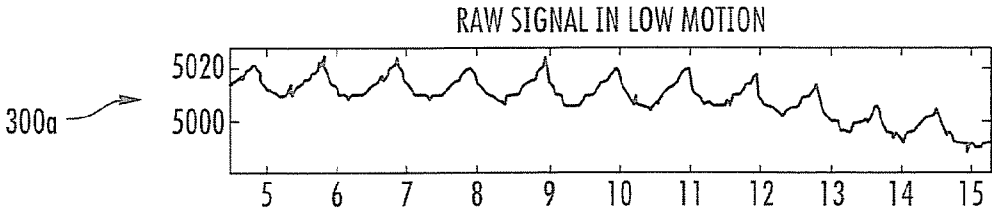

FIG. 14A

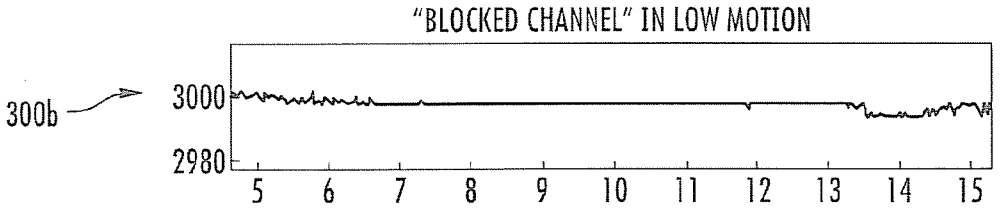

FIG. 14B

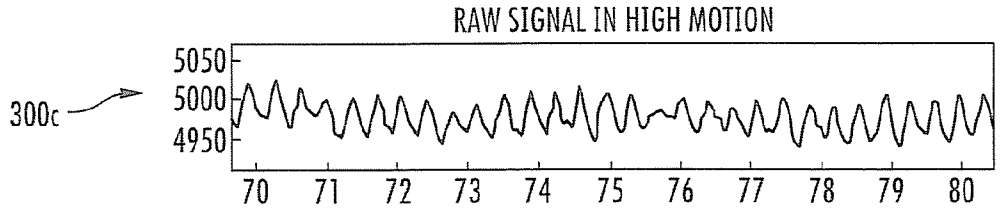

FIG. 14C

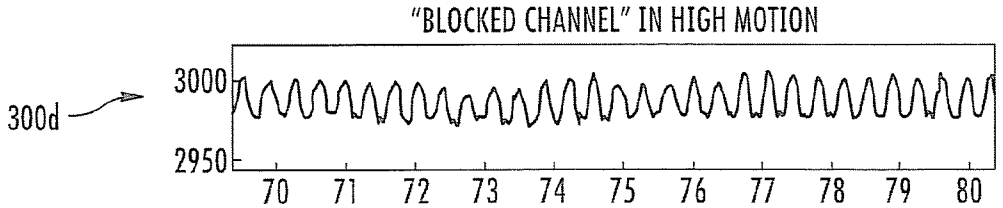

FIG. 14D

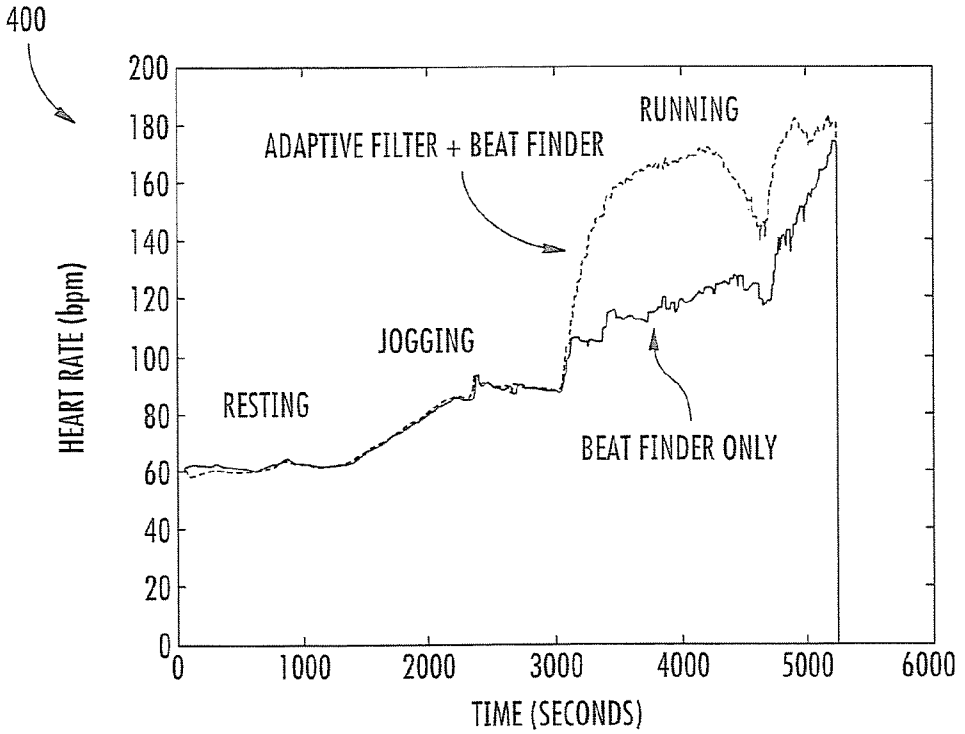
400
HEART RATE (bpm)
200
180
160
140
120
100
80
60
40
20
0
0
1000
2000
3000
4000
5000
6000
TIME (SECONDS)
RESTING
JOGGING
ADAPTIVE FILTER + BEAT FINDER
RUNNING
BEAT FINDER ONLY

FIG. 15

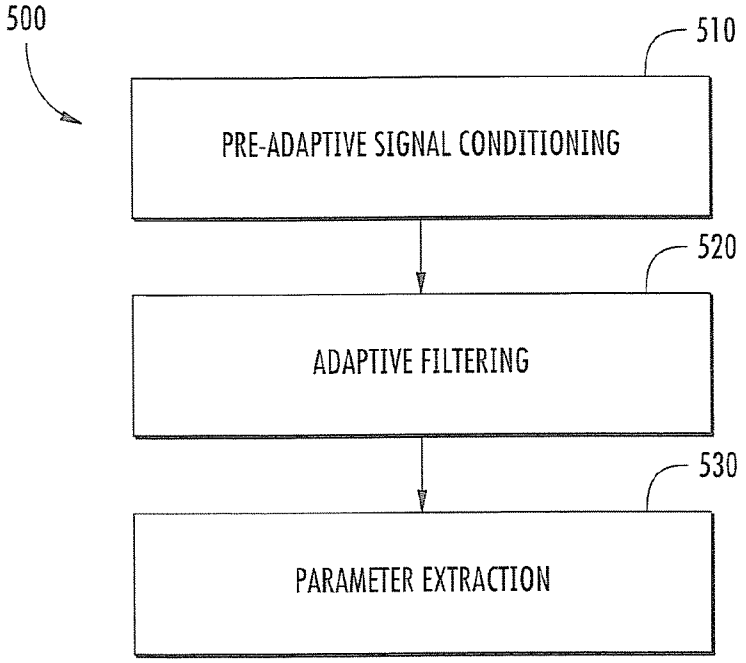
500
510
PRE-ADAPTIVE SIGNAL CONDITIONING
520
ADAPTIVE FILTERING
530
PARAMETER EXTRACTION

FIG. 16

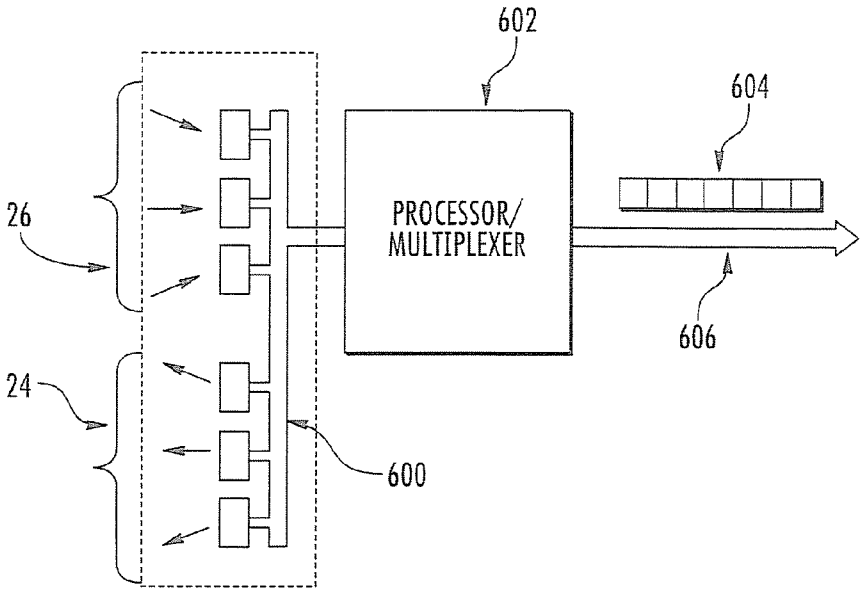
602
604
26
PROCESSOR/
MULTIPLEXER
606
24
600

FIG. 17

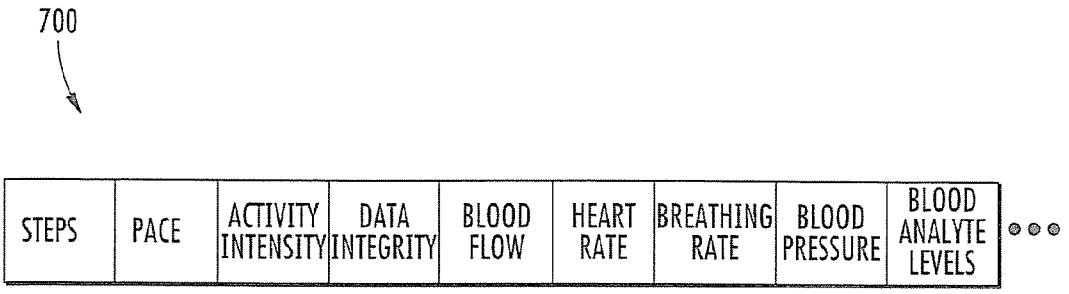
700
STEPS
PACE
ACTIVITY INTENSITY
DATA INTEGRITY
BLOOD FLOW
HEART RATE
BREATHING RATE
BLOOD PRESSURE
BLOOD ANALYTE LEVELS

FIG. 18

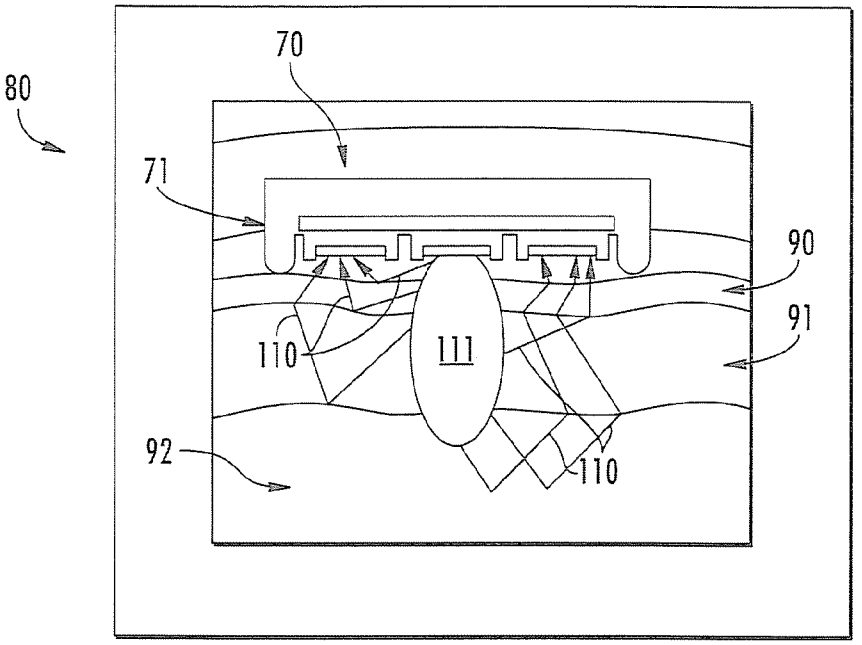
80
70
71
90
91
110
111
92
110

FIG. 19

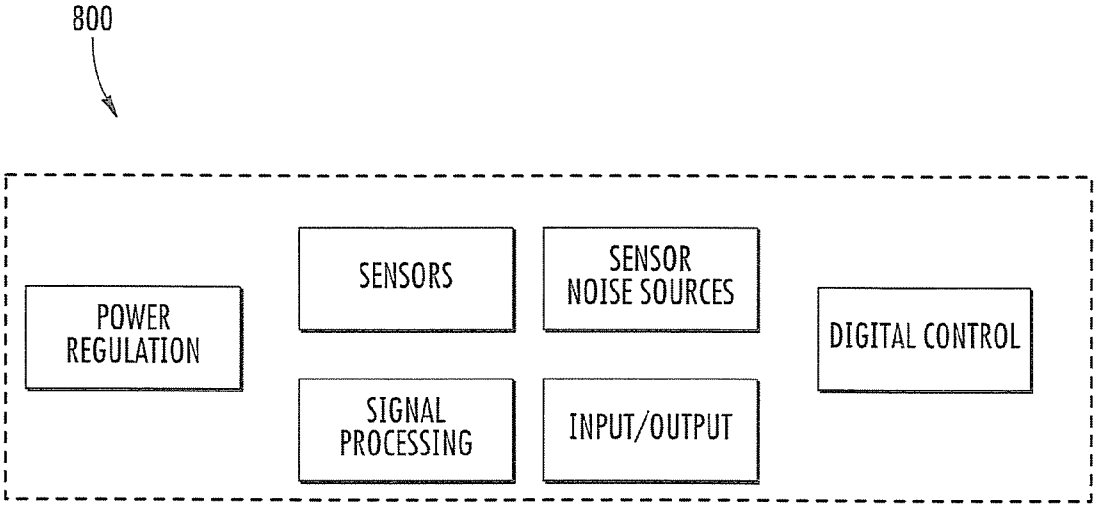
800
POWER REGULATION
SENSORS
SENSOR NOISE SOURCES
DIGITAL CONTROL
SIGNAL PROCESSING
INPUT/OUTPUT

FIG. 20

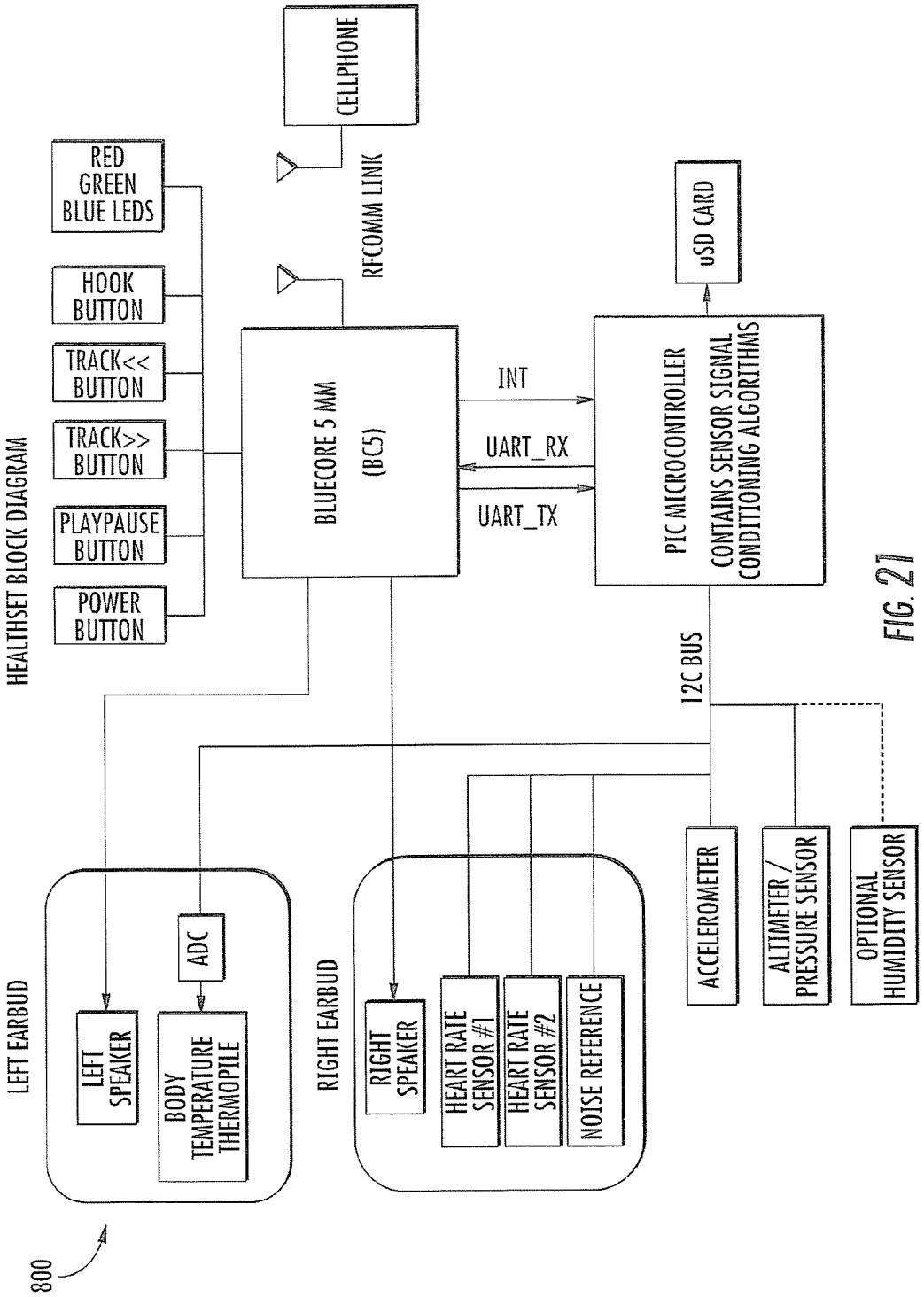
HEALTHSET BLOCK DIAGRAM
RED GREEN BLUE LEDS
HOOK BUTTON
TRACK<< BUTTON
TRACK>> BUTTON
PLAYPAUSE BUTTON
POWER BUTTON
CELLPHONE
RFCOMM LINK
BLUECORE 5 MM (BC5)
INT
UART_RX
UART_TX
PIC MICROCONTROLLER CONTAINS SENSOR SIGNAL CONDITIONING ALGORITHMS
uSD CARD
12C BUS
LEFT EARBUD
LEFT SPEAKER
ADC
BODY TEMPERATURE THERMOPILE
RIGHT EARBUD
RIGHT SPEAKER
HEART RATE SENSOR #1
HEART RATE SENSOR #2
NOISE REFERENCE
ACCELEROMETER
ALTIMETER / PRESSURE SENSOR
OPTIONAL HUMIDITY SENSOR
800

FIG. 21

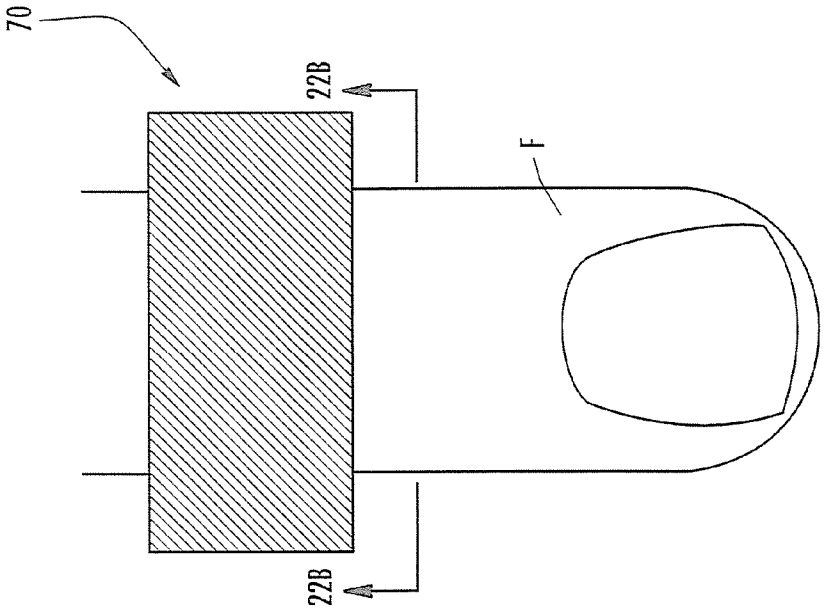

FIG. 22A

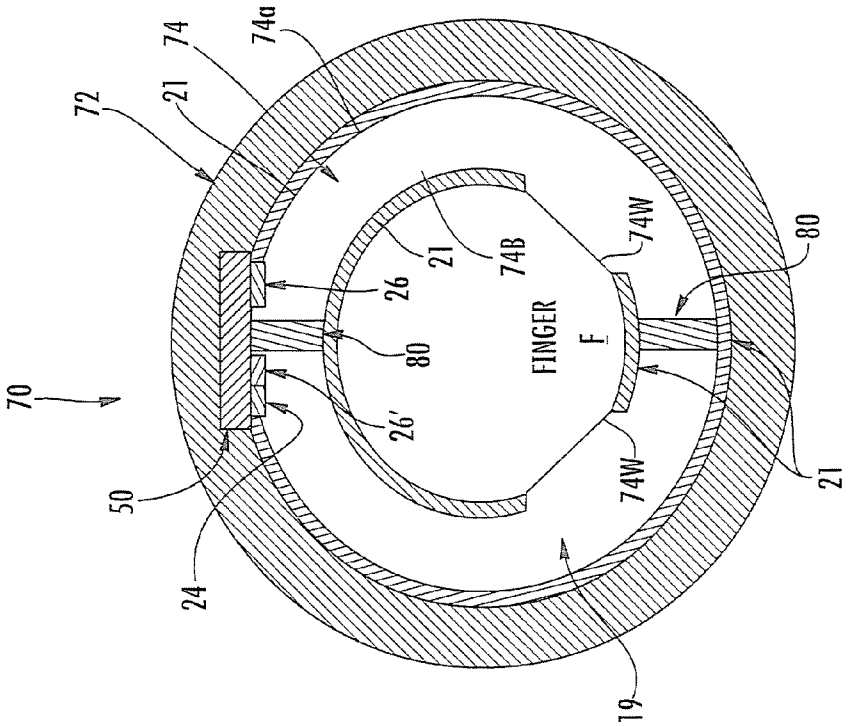

FIG. 22B

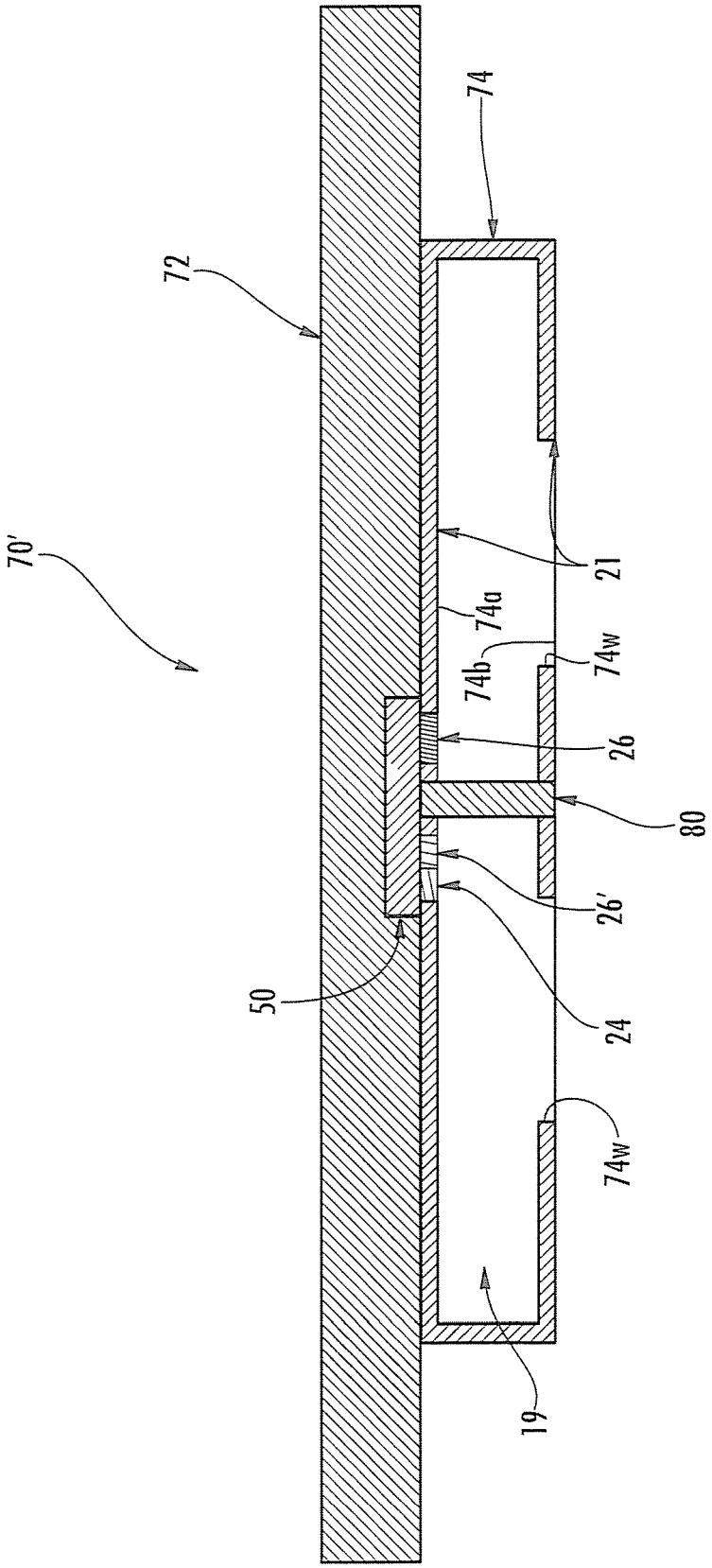

FIG. 23

LIGHT-GUIDING DEVICES AND MONITORING DEVICES INCORPORATING SAME

RELATED APPLICATIONS

[0001] This application claims the benefit of and priority to U.S. Provisional Patent Application No. 61/208,567 filed Feb. 25, 2009, U.S. Provisional Patent Application No. 61/208,574 filed Feb. 25, 2009, U.S. Provisional Patent Application No. 61/212,444 filed Apr. 13, 2009, and U.S. Provisional Patent Application No. 61/274,191 filed Aug. 14, 2009, the disclosures of which are incorporated herein by reference as if set forth in their entireties.

FIELD OF THE INVENTION

[0002] The present invention relates generally to headsets and, more particularly, to headset earbuds.

BACKGROUND OF THE INVENTION

[0003] There is growing market demand for personal health and environmental monitors, for example, for gauging overall health and metabolism during exercise, athletic training, dieting, daily life activities, sickness, and physical therapy. However, traditional health monitors and environmental monitors may be bulky, rigid, and uncomfortable—generally not suitable for use during daily physical activity. There is also growing interest in generating and comparing health and environmental exposure statistics of the general public and particular demographic groups. For example, collective statistics may enable the healthcare industry and medical community to direct healthcare resources to where they are most highly valued. However, methods of collecting these statistics may be expensive and laborious, often utilizing human-based recording/analysis steps at multiple sites.

[0004] As such, improved ways of collecting, storing and analyzing physiological information are needed. In addition, improved ways of seamlessly extracting physiological information from a person during everyday life activities, especially during high activity levels, may be important for enhancing fitness training and healthcare quality, promoting and facilitating prevention, and reducing healthcare costs.

SUMMARY

[0005] It should be appreciated that this Summary is provided to introduce a selection of concepts in a simplified form, the concepts being further described below in the Detailed Description. This Summary is not intended to identify key features or essential features of this disclosure, nor is it intended to limit the scope of the invention.

[0006] According to some embodiments of the present invention, a headset configured to be attached to the ear of a person includes a base, an earbud housing extending outwardly from the base that is configured to be positioned within an ear of a subject, and a cover surrounding the earbud housing. The base includes a speaker, an optical emitter, and an optical detector. The cover includes light transmissive material that is in optical communication with the optical emitter and the optical detector and serves as a light guide to deliver light from the optical emitter into the ear canal of the subject wearing the headset at one or more predetermined locations and to collect light external to the earbud housing and deliver the collected light to the optical detector. The optical emitter, via the light-guiding cover, directs optical energy towards a particular region of ear and the optical detector detects secondary optical energy emanating from the ear region. In some embodiments, the optical detector may include an optical filter configured to pass secondary optical energy at selective wavelengths. In some embodiments, the light transmissive material of the cover may be configured, for example via the use of cladding and/or light reflective material, such that the cover serves as a light guide that is coupled in parallel to the optical emitter and detector. In some embodiments, the light transmissive material of the cover may be configured, for example via the use of cladding and/or light reflective material, such that the cover serves as a light guide that is coupled perpendicular to the optical emitter and detector.

[0007] In some embodiments, the headset may include various electronic components secured to the base. For example, the headset may include one or more environmental sensors configured to detect and/or measure environmental conditions in a vicinity of the headset. The headset may include a signal processor configured to receive and process signals produced by the optical detector. For example, in some embodiments, a signal processor may be configured to extract secondary optical energy and remove optical noise or environmental noise. The headset may include a signal processor configured to receive and process signals produced by the one or more environmental sensors. In addition, the headset may include a transmitter configured to transmit signals processed by the signal processor to a remote device in real time. Headsets according to embodiments of the present invention may utilize, for example, Bluetooth®, Wi-Fi, ZigBee, or other wireless transmitters.

[0008] In some embodiments, a housing is secured to and overlies the base so as to enclose and protect the speaker, optical emitter and optical detector, as well as other electronic components secured to the base (e.g., sensors, processor, transmitter etc.).

[0009] The earbud housing is in acoustical communication with the speaker and has at least one aperture through which sound from the speaker can pass. The light-guiding cover surrounding the earbud housing also includes at least one aperture through which sound from the speaker can pass. The cover may be formed from a soft, resilient material, such as silicone which deforms when inserted within an ear canal of a subject. In some embodiments, the cover includes an alignment member that facilitates alignment of the earbud housing within an ear canal of a subject.

[0010] Light directed into the ear of a subject from a light emitter and the subsequent collection of light at a light detector, according to embodiments of the present invention, may be utilized for detecting and/or measuring, among other things, body temperature, skin temperature, blood gas levels, muscle tension, heart rate, blood flow, cardiopulmonary functions, etc.

[0011] In some embodiments of the present invention, the light-guiding cover may include a lens that is in optical communication with the optical emitter and/or optical detector. The lens may be configured to focus light emitted by the optical emitter and/or to focus collected light toward the optical detector. In some embodiments, multiple lenses may be incorporated into a light-guiding cover.

[0012] In some embodiments, the light-guiding cover may include a light diffusion region in optical communication with the light transmissive material that diffuses light emitted by the optical detector.

[0013] In some embodiments, the light-guiding cover may include a luminescence-generating region, such as a phosphor-containing region, that is in optical communication with the light transmissive material. The luminescence-generating region may be embedded within the light-guiding cover and/or on a surface of the light-guiding cover. The luminescence-generating region is configured to receive light emitted by the optical emitter and convert at least a portion of the received light to light having a different wavelength from that of the received light.

[0014] In some embodiments, the light-guiding cover includes one or more grooves formed therein. Each groove is configured to direct external light to the optical detector.

[0015] In some embodiments, the light transmissive material of the light-guiding cover is configured to direct light from the optical emitter to a plurality of locations at an outer surface of the cover for delivery into an ear canal of a subject.

[0016] In some embodiments, the light transmissive material of the light-guiding cover is a translucent material or includes translucent material in selected locations.

[0017] In some embodiments, a light reflective material is on at least a portion of one or both of the inner and outer surfaces of the light-guiding cover.

[0018] According to some embodiments of the present invention, a light-guiding earbud for a headset includes light transmissive material that is in optical communication with an optical emitter and optical detector associated with the headset. The light transmissive material is configured to deliver light from the optical emitter into the ear canal of a subject at one or more predetermined locations and to collect light external to the earbud housing and deliver the collected light to the optical detector. In some embodiments, the light emitter and light detector may be integral with the earbud. For example, in some embodiments, a flexible optical emitter is incorporated within the earbud and is in optical communication with the light transmissive material.

[0019] In some embodiments, an earbud includes at least one lens in optical communication with the light transmissive material. Each lens may be configured to focus light from the optical emitter onto one or more predetermined locations in the ear of a subject and/or to focus collected external light onto the optical detector

[0020] In some embodiments of the present invention, an earbud may include luminescent material. Luminescent light is generated from optical excitation of the luminescent material by an optical emitter.

[0021] In some embodiments of the present invention, an earbud may integrate a sensor module containing a plurality of sensor elements for measuring physiological information and at least one noise source for measuring noise information. A "noise source", as used herein, refers to a sensor, such as an optical sensor, inertial sensor, electrically conductive sensor, capacitive sensor, inductive sensor, etc., and derives it name from the fact that it is a source of input to a filter, such as an adaptive filter described below.

[0022] The physiological sensors of the sensor module may generate a signal that includes physiological information plus noise information. The noise may be removed by combining the physiological information and noise information from the sensor module with noise information from the noise source of the sensor module via an electronic filtering method, such as a signal processing technique. Specific examples of such signal processing techniques include FIR (Finite Impulse Response), IIR (Infinite Impulse Response), informatics, machine learning, and adaptive filter methods. The output of the adaptive filter may be a physiological signal that is wholly or partially free of noise. In some embodiments, motion-related noise from a subject activity such as running may be removed from the physiological plus noise signal generated by a photoplethysmography (PPG) sensor for measuring blood constituent levels or blood flow properties, such as blood oxygen level, VO_2, or heart rate.

[0023] In some embodiments of the present invention, the noise source input of an adaptive filter may include a "blocked channel" of optical energy, an inertial sensor, or environmental energy. In some embodiments, the environmental energy may be unwanted ambient optical noise.

[0024] In some embodiments of the present invention, a processor/multiplexor processes physiological signals and noise signals into a data string. This data string may contain information relating to physiological information and motion-related information. The processing method may include signal processing techniques such as pre-adaptive signal conditioning, adaptive filtering, and parameter extraction.

[0025] In some embodiments, an earbud includes one or more sensor modules that includes one or more sensors for sensing physiological information and environmental information, such as noise, for example. As such, the earbud may function as a physiological monitor as well as an environmental monitor. In some embodiments, the earbud may include a microprocessor that is in electrical communication with the sensor module(s). For example, a microprocessor incorporated into an earbud may be configured to execute an adaptive filter algorithm to remove noise from at least one signal generated by a sensor module in the earbud. A microprocessor may also be configured to process information from the one or more sensors to generate a digital output string, wherein the digital output string includes a plurality of physiological and motion-related information.

[0026] Physiological sensors that may be incorporated into headsets and/or earbuds, according to some embodiments of the present invention, may be configured to detect and/or measure one or more of the following types of physiological information: heart rate, pulse rate, breathing rate, blood flow, VO_2, VO_2max, heartbeat signatures, cardio-pulmonary health, organ health, metabolism, electrolyte type and/or concentration, physical activity, caloric intake, caloric metabolism, blood metabolite levels or ratios, blood pH level, physical and/or psychological stress levels and/or stress level indicators, drug dosage and/or dosimetry, physiological drug reactions, drug chemistry, biochemistry, position and/or balance, body strain, neurological functioning, brain activity, brain waves, blood pressure, cranial pressure, hydration level, auscultatory information, auscultatory signals associated with pregnancy, physiological response to infection, skin and/or core body temperature, eye muscle movement, blood volume, inhaled and/or exhaled breath volume, physical exertion, exhaled breath physical and/or chemical composition, the presence and/or identity and/or concentration of viruses and/or bacteria, foreign matter in the body, internal toxins, heavy metals in the body, anxiety, fertility, ovulation, sex hormones, psychological mood, sleep patterns, hunger and/or thirst, hormone type and/or concentration, cholesterol, lipids, blood panel, bone density, organ and/or body weight, reflex response, sexual arousal, mental and/or physical alertness, sleepiness, auscultatory information, response to external stimuli, swallowing volume, swallowing rate, sickness, voice

characteristics, voice tone, voice pitch, voice volume, vital signs, head tilt, allergic reactions, inflammation response, auto-immune response, mutagenic response, DNA, proteins, protein levels in the blood, water content of the blood, pheromones, internal body sounds, digestive system functioning, cellular regeneration response, healing response, stem cell regeneration response, etc.

[0027] Environmental sensors that may be incorporated into headsets and/or earbuds, according to some embodiments of the present invention, may be configured to detect and/or measure one or more of the following types of environmental information: climate, humidity, temperature, pressure, barometric pressure, soot density, airborne particle density, airborne particle size, airborne particle shape, airborne particle identity, volatile organic chemicals (VOCs), hydrocarbons, polycyclic aromatic hydrocarbons (PAHs), carcinogens, toxins, electromagnetic energy, optical radiation, X-rays, gamma rays, microwave radiation, terahertz radiation, ultraviolet radiation, infrared radiation, radio waves, atomic energy alpha particles, atomic energy beta-particles, gravity, light intensity, light frequency, light flicker, light phase, ozone, carbon monoxide, carbon dioxide, nitrous oxide, sulfides, airborne pollution, foreign material in the air, viruses, bacteria, signatures from chemical weapons, wind, air turbulence, sound and/or acoustical energy, ultrasonic energy, noise pollution, human voices, animal sounds, diseases expelled from others, exhaled breath and/or breath constituents of others, toxins from others, pheromones from others, industrial and/or transportation sounds, allergens, animal hair, pollen, exhaust from engines, vapors and/or fumes, fuel, signatures for mineral deposits and/or oil deposits, snow, rain, thermal energy, hot surfaces, hot gases, solar energy, hail, ice, vibrations, traffic, the number of people in a vicinity of the person, coughing and/or sneezing sounds from people in the vicinity of the person, loudness and/or pitch from those speaking in the vicinity of the person.

[0028] According to some embodiments of the present invention, earbuds for headsets may include a chipset having at least one sensor element, noise source element, signal processor, input/output line, digital control, and power regulator.

[0029] Light-guiding earbuds according to the various embodiments of the present invention may be utilized with mono headsets (i.e., headsets having one earbud) as well as stereo headsets (i.e., headsets having two earbuds). Additionally, the light-guiding region of earbuds, according to embodiments of the present invention, may be integrated not only into an earbud cover and earbud housing, but also into each or all components of an earbud. Moreover, light-guiding earbuds according to the various embodiments of the present invention may be utilized with hearing aids, body jewelry, or any other attachment that can be placed near the head region, such as eye glasses or shades, a headband, a cap, helmet, visor, or the like.

[0030] According to some embodiments of the present invention, a monitoring device includes a circular band capable of encircling a finger of a subject, and a base having an optical emitter and an optical detector attached to the circular band. The circular band includes light transmissive material in optical communication with the optical emitter and optical detector that is configured to deliver light from the optical emitter to one or more portions of the finger of the subject and to collect light from one or more portions of the finger of the subject and deliver the collected light to the optical detector. In some embodiments, the circular band includes first and second concentric body portions.

[0031] In some embodiments, the circular band includes a lens region in optical communication with the optical emitter that focuses light emitted by the optical emitter and/or that collects light reflected from a finger. In some embodiments the circular band includes a phosphor-containing region in optical communication with the light transmissive material, wherein the phosphor-containing region receives light emitted by the optical emitter and converts at least a portion of the received light to light having a different wavelength from the received light.

[0032] In some embodiments, the light transmissive material of the circular band has an outer surface and an inner surface, and a cladding material, such as light reflective material, is on (or near) at least a portion of one or both of the inner and outer surfaces.

[0033] In some embodiments, the base includes one or more of the following: a signal processor configured to receive and process signals produced by the optical detector, a transmitter configured to transmit signals processed by the signal processor to a remote device.

[0034] According to some embodiments of the present invention, a monitoring device configured to be attached to the body of a subject includes a base having an optical emitter and an optical detector, and light transmissive material attached to the base. The light transmissive material is in optical communication with the optical emitter and optical detector and is configured to deliver light from the optical emitter to one or more portions of the body of the subject and to collect light from one or more portions of the body of the subject and deliver the collected light to the optical detector. The light transmissive material may include adhesive material in one or more locations that is configured to adhesively secure the device to the body of the subject.

[0035] In some embodiments, an outer body portion is attached to the base and to the light transmissive material. The outer body portion may include adhesive material in one or more locations that is configured to adhesively secure the device to the body of the subject.

[0036] In some embodiments, the light transmissive material includes a lens region that is in optical communication with the optical emitter and that focuses light emitted by the optical emitter and/or that collects light reflected from a finger. In some embodiments, the light transmissive material includes a phosphor-containing region that receives light emitted by the optical emitter and converts at least a portion of the received light to light having a different wavelength from the received light. In some embodiments, the light transmissive material has an outer surface and an inner surface, and a light reflective material is disposed on or near at least a portion of one or both of the inner and outer surfaces.

[0037] In some embodiments, the base includes one or more of the following: a signal processor configured to receive and process signals produced by the optical detector, a transmitter configured to transmit signals processed by the signal processor to a remote device.

[0038] It is noted that aspects of the invention described with respect to one embodiment may be incorporated in a different embodiment although not specifically described relative thereto. That is, all embodiments and/or features of any embodiment can be combined in any way and/or combination. Applicant reserves the right to change any originally filed claim or file any new claim accordingly, including the

right to be able to amend any originally filed claim to depend from and/or incorporate any feature of any other claim although not originally claimed in that manner. These and other objects and/or aspects of the present invention are explained in detail below.

BRIEF DESCRIPTION OF THE DRAWINGS

[0039] The accompanying drawings, which form a part of the specification, illustrate various embodiments of the present invention. The drawings and description together serve to fully explain embodiments of the present invention.

[0040] FIG. **1** is an exploded perspective view of a headset with a light-guiding earbud, according to some embodiments of the present invention.

[0041] FIG. **2** is a perspective view of a stereo headset incorporating light-guiding earbuds, according to some embodiments of the present invention.

[0042] FIG. **3** is a side section view of a light-guiding earbud for a headset, according to some embodiments of the present invention.

[0043] FIGS. **4**A-**4**D are side section views of light-guiding earbuds for a headset, according to some embodiments of the present invention.

[0044] FIG. **5** is a side section view of a light-guiding earbud for a headset, according to some embodiments of the present invention.

[0045] FIG. **6** is a side section view of a light-guiding earbud for a headset, according to some embodiments of the present invention.

[0046] FIG. **7**A is a side section view of a light-guiding earbud for a headset, according to some embodiments of the present invention.

[0047] FIG. **7**B is a perspective view of a flexible optical emitter utilized in the earbud of FIG. **7**A, according to some embodiments of the present invention.

[0048] FIG. **8**A is a side section view of a light-guiding earbud for a headset, according to some embodiments of the present invention.

[0049] FIG. **8**B is a cross-sectional view of the earbud of FIG. **8**A taken along lines **8**B-**8**B.

[0050] FIG. **8**C is a side section view of a light-guiding earbud for a headset, according to some embodiments of the present invention.

[0051] FIG. **8**D is a side section view of a light-guiding earbud for a headset, according to some embodiments of the present invention.

[0052] FIG. **9**A is a side section view of a light-guiding earbud for a headset, according to some embodiments of the present invention.

[0053] FIG. **9**B is a cross-sectional view of the earbud of FIG. **9**A taken along lines **9**B-**9**B.

[0054] FIG. **9**C illustrates luminescent particles within the earbud cover of FIGS. **9**A-**9**B, according to some embodiments of the present invention.

[0055] FIG. **9**D is a side section view of a light-guiding earbud for a headset, according to some embodiments of the present invention.

[0056] FIG. **9**E is a cross-sectional view of the earbud of FIG. **9**D taken along lines **9**E-**9**E.

[0057] FIG. **10** illustrates various anatomy of a human ear.

[0058] FIG. **11**A is a side section view of a light-guiding earbud for a headset, according to some embodiments of the present invention.

[0059] FIG. **11**B is a cross-sectional view of the earbud of FIG. **11**A taken along lines **11**B-**11**B.

[0060] FIGS. **12**A-**12**B illustrate respective opposite sides of a sensor module that may be located near the periphery of an earbud, according to some embodiments of the present invention.

[0061] FIG. **13** illustrates an adaptive filter and noise source for removing noise from a noisy physiological signal, according to some embodiments of the present invention.

[0062] FIGS. **14**A-**14**D are respective graphs of time-dependent data collected from a light-guiding earbud worn by a person, according to some embodiments of the present invention.

[0063] FIG. **15** is a graph of processed physiological signal data from a headset having one or more light-guiding earbuds, according to some embodiments of the present invention.

[0064] FIG. **16** is a flow chart of operations for extracting physiological information from headset sensor signals, according to some embodiments of the present invention.

[0065] FIG. **17** is a block diagram that illustrates sensor signals being processed into a digital data string including activity data and physiological data, according to some embodiments of the present invention.

[0066] FIG. **18** illustrates a digital data string, according to some embodiments of the present invention.

[0067] FIG. **19** illustrates the optical interaction between the sensor module of FIGS. **12**A-**12**B and the skin of a subject.

[0068] FIG. **20** illustrates a chipset for use in a headset, according to some embodiments of the present invention.

[0069] FIG. **21** illustrates a chipset for use in a stereo headset, according to some embodiments of the present invention.

[0070] FIG. **22**A is a top plan view of a monitoring device configured to be attached to finger of a subject, according to some embodiments of the present invention.

[0071] FIG. **22**B is a cross-sectional view of the monitoring device of FIG. **22**A taken along lines **22**B-**22**B.

[0072] FIG. **23** is a side view of a monitoring device configured to be attached to the body of a subject, according to some embodiments of the present invention.

DETAILED DESCRIPTION

[0073] The present invention will now be described more fully hereinafter with reference to the accompanying figures, in which embodiments of the invention are shown. This invention may, however, be embodied in many different forms and should not be construed as limited to the embodiments set forth herein. Like numbers refer to like elements throughout. In the figures, certain layers, components or features may be exaggerated for clarity, and broken lines illustrate optional features or operations unless specified otherwise. In addition, the sequence of operations (or steps) is not limited to the order presented in the figures and/or claims unless specifically indicated otherwise. Features described with respect to one figure or embodiment can be associated with another embodiment or figure although not specifically described or shown as such.

[0074] It will be understood that when a feature or element is referred to as being "on" another feature or element, it can be directly on the other feature or element or intervening features and/or elements may also be present. In contrast, when a feature or element is referred to as being "directly on" another feature or element, there are no intervening features or elements present. It will also be understood that, when a

feature or element is referred to as being "connected", "attached" or "coupled" to another feature or element, it can be directly connected, attached or coupled to the other feature or element or intervening features or elements may be present. In contrast, when a feature or element is referred to as being "directly connected", "directly attached" or "directly coupled" to another feature or element, there are no intervening features or elements present. Although described or shown with respect to one embodiment, the features and elements so described or shown can apply to other embodiments. It will also be appreciated by those of skill in the art that references to a structure or feature that is disposed "adjacent" another feature may have portions that overlap or underlie the adjacent feature.

[0075] The terminology used herein is for the purpose of describing particular embodiments only and is not intended to be limiting of the invention. As used herein, the singular forms "a", "an" and "the" are intended to include the plural forms as well, unless the context clearly indicates otherwise. It will be further understood that the terms "comprises" and/or "comprising," when used in this specification, specify the presence of stated features, steps, operations, elements, and/or components, but do not preclude the presence or addition of one or more other features, steps, operations, elements, components, and/or groups thereof. As used herein, the term "and/or" includes any and all combinations of one or more of the associated listed items.

[0076] Spatially relative terms, such as "under", "below", "lower", "over", "upper" and the like, may be used herein for ease of description to describe one element or feature's relationship to another element(s) or feature(s) as illustrated in the figures. It will be understood that the spatially relative terms are intended to encompass different orientations of the device in use or operation in addition to the orientation depicted in the figures. For example, if a device in the figures is inverted, elements described as "under" or "beneath" other elements or features would then be oriented "over" the other elements or features. Thus, the exemplary term "under" can encompass both an orientation of over and under. The device may be otherwise oriented (rotated 90 degrees or at other orientations) and the spatially relative descriptors used herein interpreted accordingly. Similarly, the terms "upwardly", "downwardly", "vertical", "horizontal" and the like are used herein for the purpose of explanation only unless specifically indicated otherwise.

[0077] It will be understood that although the terms first and second are used herein to describe various features/elements, these features/elements should not be limited by these terms. These terms are only used to distinguish one feature/element from another feature/element. Thus, a first feature/element discussed below could be termed a second feature/element, and similarly, a second feature/element discussed below could be termed a first feature/element without departing from the teachings of the present invention. Like numbers refer to like elements throughout.

[0078] Unless otherwise defined, all terms (including technical and scientific terms) used herein have the same meaning as commonly understood by one of ordinary skill in the art to which this invention belongs. It will be further understood that terms, such as those defined in commonly used dictionaries, should be interpreted as having a meaning that is consistent with their meaning in the context of the specification and relevant art and should not be interpreted in an idealized or overly formal sense unless expressly so defined herein. Well-known functions or constructions may not be described in detail for brevity and/or clarity.

[0079] The term "headset" includes any type of device or earpiece that may be attached to or near the ear (or ears) of a user and may have various configurations, without limitation. Headsets incorporating light-guiding earbuds as described herein may include mono headsets (one earbud) and stereo headsets (two earbuds), earbuds, hearing aids, ear jewelry, face masks, headbands, and the like.

[0080] The term "real-time" is used to describe a process of sensing, processing, or transmitting information in a time frame which is equal to or shorter than the minimum timescale at which the information is needed. For example, the real-time monitoring of pulse rate may result in a single average pulse-rate measurement every minute, averaged over 30 seconds, because an instantaneous pulse rate is often useless to the end user. Typically, averaged physiological and environmental information is more relevant than instantaneous changes. Thus, in the context of the present invention, signals may sometimes be processed over several seconds, or even minutes, in order to generate a "real-time" response.

[0081] The term "monitoring" refers to the act of measuring, quantifying, qualifying, estimating, sensing, calculating, interpolating, extrapolating, inferring, deducing, or any combination of these actions. More generally, "monitoring" refers to a way of getting information via one or more sensing elements. For example, "blood health monitoring" includes monitoring blood gas levels, blood hydration, and metabolite/electrolyte levels.

[0082] The term "physiological" refers to matter or energy of or from the body of a creature (e.g., humans, animals, etc.). In embodiments of the present invention, the term "physiological" is intended to be used broadly, covering both physical and psychological matter and energy of or from the body of a creature. However, in some cases, the term "psychological" is called-out separately to emphasize aspects of physiology that are more closely tied to conscious or subconscious brain activity rather than the activity of other organs, tissues, or cells.

[0083] The term "body" refers to the body of a subject (human or animal) that may wear a headset incorporating one or more light-guiding earbuds, according to embodiments of the present invention.

[0084] In the following figures, various headsets and light-guiding earbuds for use with headsets will be illustrated and described for attachment to the ear of the human body. However, it is to be understood that embodiments of the present invention are not limited to those worn by humans.

[0085] The ear is an ideal location for wearable health and environmental monitors. The ear is a relatively immobile platform that does not obstruct a person's movement or vision. Headsets located at an ear have, for example, access to the inner-ear canal and tympanic membrane (for measuring core body temperature), muscle tissue (for monitoring muscle tension), the pinna and earlobe (for monitoring blood gas levels), the region behind the ear (for measuring skin temperature and galvanic skin response), and the internal carotid artery (for measuring cardiopulmonary functioning), etc. The ear is also at or near the point of exposure to: environmental breathable toxicants of interest (volatile organic compounds, pollution, etc.; noise pollution experienced by the ear; and lighting conditions for the eye. Furthermore, as the ear canal is naturally designed for transmitting acoustical

energy, the ear provides a good location for monitoring internal sounds, such as heartbeat, breathing rate, and mouth motion.

[0086] Wireless, Bluetooth®-enabled, and/or other personal communication headsets may be configured to incorporate physiological and/or environmental sensors, according to some embodiments of the present invention. As a specific example, Bluetooth® headsets are typically lightweight, unobtrusive devices that have become widely accepted socially. Moreover, Bluetooth® headsets are cost effective, easy to use, and are often worn by users for most of their waking hours while attending or waiting for cell phone calls. Bluetooth® headsets configured according to embodiments of the present invention are advantageous because they provide a function for the user beyond health monitoring, such as personal communication and multimedia applications, thereby encouraging user compliance. Exemplary physiological and environmental sensors that may be incorporated into a Bluetooth® or other type of headsets include, but are not limited to accelerometers, auscultatory sensors, pressure sensors, humidity sensors, color sensors, light intensity sensors, pressure sensors, etc.

[0087] Headsets, both mono (single earbud) and stereo (dual earbuds), incorporating low-profile sensors and other electronics, according to embodiments of the present invention, offer a platform for performing near-real-time personal health and environmental monitoring in wearable, socially acceptable devices. The capability to unobtrusively monitor an individual's physiology and/or environment, combined with improved user compliance, is expected to have significant impact on future planned health and environmental exposure studies. This is especially true for those that seek to link environmental stressors with personal stress level indicators. The large scale commercial availability of this low-cost device can enable cost-effective large scale studies. The combination of monitored data with user location via GPS data can make on-going geographic studies possible, including the tracking of infection over large geographic areas. The commercial application of the proposed platform encourages individual-driven health maintenance and promotes a healthier lifestyle through proper caloric intake and exercise.

[0088] Accordingly, some embodiments of the present invention combine a personal communications headset device with one or more physiological and/or environmental sensors. Other embodiments may combine physiological and/or environmental sensors into a headset device.

[0089] Optical coupling into the blood vessels of the ear may vary between individuals. As used herein, the term "coupling" refers to the interaction or communication between excitation light entering a region and the region itself. For example, one form of optical coupling may be the interaction between excitation light generated from within a light-guiding earbud and the blood vessels of the ear. In one embodiment, this interaction may involve excitation light entering the ear region and scattering from a blood vessel in the ear such that the intensity of scattered light is proportional to blood flow within the blood vessel. Another form of optical coupling may be the interaction between excitation light generated by an optical emitter within an earbud and the light-guiding region of the earbud. Thus, an earbud with integrated light-guiding capabilities, wherein light can be guided to multiple and/or select regions along the earbud, can assure that each individual wearing the earbud will generate an optical signal related to blood flow through the blood vessels. Optical coupling of light to a particular ear region of one person may not yield photoplethysmographic signals for each person. Therefore, coupling light to multiple regions may assure that at least one blood-vessel-rich region will be interrogated for each person wearing the light-guiding earbud. Coupling multiple regions of the ear to light may also be accomplished by diffusing light from a light source within the earbud.

[0090] Embodiments of the present invention are not limited to headsets that communicate wirelessly. In some embodiments of the present invention, headsets configured to monitor an individual's physiology and/or environment may be wired to a device that stores and/or processes data. In some embodiments, this information may be stored on the headset itself. Furthermore, embodiments of the present invention are not limited to earbuds. In some embodiments, the light-guiding structure may be molded around another part of the body, such as a digit, finger, toe, limb, around the nose or earlobe, or the like. In other embodiments, the light-guiding structure may be integrated into a patch, such as a bandage that sticks on a person's body.

[0091] Referring to FIG. **1**, a headset **10** according to some embodiments of the present invention is illustrated. The illustrated headset **10** includes a base **12**, a headset housing **14**, an earbud housing **16**, and a cover **18** that surrounds the earbud housing **16**. The base **12** includes a main circuit board **20** that supports and/or is connected to various electronic components. In the illustrated embodiment, a speaker **22**, optical emitter **24**, optical detectors **26**, and thermopile **28** (described below) are mounted onto a secondary circuit board **32** which is secured to the main circuit board **20**. The earbud housing surrounds the speaker **22**, optical emitter **24**, optical detectors **26**, and thermopile **28**. Collectively, the earbud housing **16**, cover **18**, and various electronic components (e.g., speaker **22**, optical emitter **24**, optical detectors **26**, thermopile **28**) located within the earbud housing **16** of the illustrated headset **10** may be referred to as an earbud **30**. The headset housing **14** is secured to the base **12** and is configured to enclose and protect the various electronic components mounted to the base (e.g., main circuit board **20** and components secured thereto, etc.) from ambient interference (air, humidity, particulates, electromagnetic interference, etc).

[0092] Each optical detector **26** may be a photodiode, photodetector, phototransistor, thyristor, solid state device, optical chipset, or the like. The optical emitter **24** may be a light-emitting diode (LED), laser diode (LD), compact incandescent bulb, micro-plasma emitter, IR blackbody source, or the like. The speaker **22** may be a compact speaker, such as an inductive speaker, piezoelectric speaker, electrostatic speaker, or the like. One or more microphones, such as electrets, MEMS, acoustic transducers, or the like, may also be located within the headset housing or earbud housing to pick up speech, physiological sounds, and/or environmental sounds.

[0093] The main circuit board **20** and secondary circuit board **32** may also support one or more sensor modules (not shown) that contain various physiological and/or environmental sensors. For example, a sensor module, such as sensor module **70** illustrated in FIGS. **12**A-**12**B, may be attached to the circuit boards **20**, **32**. The circuit boards **20**, **32** also may include at least one signal processor (not shown), at least one wireless module (not shown) for communicating with a remote device, and/or at least one memory storage device (not shown). An exemplary wireless module may include a wire-

less chip, antenna, or RFID tag. In some embodiments, the wireless module may include a low-range wireless chip or chipset, such as a Bluetooth® or ZigBee chip. These electronic components may be located on the main circuit board **20**, or on another circuit board, such as the secondary circuit board **32**, attached to the main circuit board.

[0094] Secondary circuit board **32** may also include a temperature sensor, such as a thermopile **28** mounted thereto. The thermopile **28** is oriented so as to point towards the tympanic membrane within the ear of a subject wearing the headset **10** through the acoustic orifices **34***a*, **34***b* in the earbud housing **16** and cover **18**, respectively. The secondary circuit board **32** may be in electrical contact with the main circuit board **20** via soldering, connectors, wiring, or the like. A battery **36**, such as a lithium polymer battery or other portable battery, may be mounted to the main circuit board **20** and may be charged via a USB charge port **38**. Although not shown in FIG. **1**, an ear hook may be attached to the base **12** or housing **14** to help stabilize the earbud **30** and headset **10** worn by a subject and such that the earbud **30** is consistently placed at the same location within the ear canal of a subject.

[0095] In the illustrated embodiment, the earbud housing **16** is in acoustical communication with the speaker **22** and includes an aperture **34***a* through which sound from the speaker **22** can pass. However, additional apertures may also be utilized. The cover **18** also includes at least one aperture **34***b* through which sound from the speaker **22** can pass. The thermopile **28** is used as a heat sensor and measures thermal radiation from the ear of a subject via the acoustic apertures **34***a*, **34***b*. Additional or other sensors may be in the location of the thermopile **28**, aligned towards the tympanic membrane, to sense other forms of energy, such as acoustic, mechanical, chemical, optical, or nuclear energy from the tympanic membrane region. For example, a photodetector may replace the thermopile **28** to measure light scattering off the tympanic membrane.

[0096] The cover **18** includes light transmissive material in a portion **19** thereof that is referred to as a light-guiding region. The light transmissive material in light-guiding region **19** is in optical communication with the optical emitter **24** and detectors **26**. The light transmissive material in light-guiding region **19** is configured to deliver light from the optical emitter **24** into an ear canal of the subject at one or more predetermined locations and to collect light external to the earbud **30** and deliver the collected light to the optical detectors **26**. As such, the earbud **30** of the illustrated headset **10** is referred to as a "light-guiding" earbud **30**.

[0097] In some embodiments, the light transmissive material in the light-guiding region **19** may include a lens (e.g., lens **18**L illustrated in FIG. **6**). The lens **18**L is in optical communication with the optical emitter **24** and/or with the optical detectors **26**. For example, a lens **18**L may be configured to focus light emitted by the optical emitter **24** onto one or more portions of an ear and/or to focus collected light on the light detectors **26**. Lenses are described below with respect to FIGS. **5-6**.

[0098] In some embodiments, the earbud cover **18** may integrate a transparent light-guiding layer, wherein air is utilized as a cladding layer. For example, the earbud cover **18** may include an optically transparent silicone molded layer, and the earbud housing **16** may be removed such that a cladding layer is air. In some embodiments, the earbud housing **16** may be closed, and the light-guiding region **19** may be integrated within the cover **18** or between the housing **16** and cover **18**.

[0099] The illustrated cover **18** of FIG. **1** includes an alignment member **40** (also referred to as a stabilization arm) that facilitates alignment of the earbud **30** within an ear canal of a subject. The alignment member **40** may facilitate stable measurements of optical scattered light from the ear region, which can be important for PPG measurements and tympanic temperature measurements.

[0100] In some embodiments, a light-guiding cover **18** is formed from a soft, resilient material, such as silicone, which deforms when inserted within an ear canal of a subject. However, various materials may be utilized for light-guiding covers **18** and for serving as light guides depending on the type of earbud desired for a particular use case, according to embodiments of the present invention. For example, in some embodiments, a light-guiding cover **18** may be formed from a substantially rigid material such that the light-guiding earbud **30** is substantially rigid. For example, for a running use case, the runner may wish to have firm but soft earbuds, such that the earbud may deform to some extent when inserted into the ear. In such case, the light-guiding region may be silicone or other soft material and the outer cladding may be air, a polymer, plastic, or a soft material having a lower index of refraction than silicone.

[0101] FIG. **2** illustrates a stereo headset **100** that utilizes two light-guiding earbuds **130**, according to some embodiments of the present invention. The headset **100** also includes various sensor elements **132** located at several regions in the stereo headset **100**. A benefit of the stereo headset **100** may be that the total number of sensors measuring the ear region may be doubled; alternatively, the sensors in each earbud may be halved. Another benefit of the stereo headset is that it may enable stereo music during daily activities. Another benefit of the stereo headset is that asymmetric physiological differences can be detected in the user by measuring each side of the user in real-time. For example, differences in blood flow between right and left sides of a user may be detected, indicating changes in right/left brain activity, the onset of a stroke, localized inflammation, or the like.

[0102] Light-guiding earbuds according to various embodiments of the present invention will now be described with respect to FIGS. **3**, **4**A-**4**D, **5**, **6**, **7**A-**7**B, **8**A-**8**D, **9**A-**9**B, and **11**A-**11**B. Referring initially to FIGS. **3-4**, a light-guiding earbud **30** includes a base **50**, an earbud housing **16** extending outwardly from the base **50** that is configured to be positioned within an ear E of a subject, and a cover **18** that surrounds the earbud housing **16**. The earbud housing **16** is in acoustical communication with a speaker **22** and includes at least one aperture **34***a* through which sound from the speaker **22** can pass. The cover **18** includes at least one aperture **34***b* through which sound from the speaker **22** can pass, and includes light transmissive material in optical communication with an optical emitter **24** and detector **26**.

[0103] The cover **18** includes cladding material **21** on an inner surface **18***b* thereof and on an outer surface **18***a* thereof, as illustrated. An end portion **18***f* of the cover outer surface **18***a* does not have cladding material. As such, the cover **18** serves as a light guide that delivers light from the optical emitter **24** through the end portion **18***f* and into the ear canal C of a subject at one or more predetermined locations and that collects light external to the earbud housing **16** and delivers the collected light to the optical detector **26**. In the various

embodiments described herein, the terms light guide and cover are intended to be interchangeable. However, it should be noted that, in other embodiments, the earbud housing **16** may also serve as a light guide without the need for cover **18**.

[0104] The base **50** in all of the earbud embodiments (FIGS. **3**, **4**A-**4**D, **5**, **6**, **7**A-**7**B, **8**A-**8**D, **9**A-**9**B, and **11**A-**11**B) described herein may include any combination of a printed circuit board, electrical connectors, and housing component for a headset. For example, the base **50** in FIGS. **3**-**6**, **7**A-**7**B, **8**A-**8**D, **9**A-**9**B, and **11**A-**11**B, may include, for example, the base **12** of the headset **10** of FIG. **1**, the main circuit board **20** of the headset **10** of FIG. **1**, the housing **14** of the headset **10** of FIG. **1**, or may be a combination of the base **12**, main circuit board **20**, and/or housing **14** of the headset **10** of FIG. **1**.

[0105] The optical emitter **24** generates inspection light **111** and the light-guiding region **19** of the light guide **18** directs the inspection light **111** towards an ear region. This light is called inspection light because it interrogates the surface of the ear, penetrates the skin of the ear, and generates a scattered light response **110** which may effectively inspect blood vessels within the ear region. The optical detector **26** detects scattered light **110** from an ear region and the light-guiding region **19** of the light guide **18** guides the light to the optical detector **26** through the light-guiding region **19**, as illustrated.

[0106] In the embodiment of FIG. **3**, the light-guiding earbud **30** is configured for optical coupling that is parallel to the light guide (i.e., cover **18**). The optical detector **26** and optical emitter **24** are configured to detect and generate light substantially parallel to the light-guiding region **19** of the light guide **18**. For example, the light guide **18** defines an axial direction A_1. The optical emitter **24** and optical detector **26** are each oriented such that their respective primary emitting and detecting planes P_1, P_2 are each facing a respective direction A_3, A_2 that is substantially parallel with direction A_1.

[0107] The light guiding region **19** of the light guide **18** in the illustrated embodiment of FIG. **3** is defined by cladding material **21** that helps confine light within the light guiding region **19**. The cladding material **21** may be reflective material in some embodiments. In other embodiments, the cladding material may be optically transparent or mostly transparent with a lower index of refraction than the light transmissive material of the cover **18**. The cladding **21** may be a layer of material applied to one or more portions of the inner and/or outer surfaces **18***a*, **18***b* of the light guide **18**. In some embodiments, the outer surface **16***a* of the earbud housing **16** may serve as cladding that confines light within the light-guiding region **19**. In some embodiments, the light transmissive material of the light guide **18** may be composed of a material having a higher index of refraction than the cladding material **21**. In some embodiments, air may serve as a cladding layer.

[0108] In the embodiment of FIG. **4**A, the light-guiding earbud **30** is configured for optical coupling that is substantially perpendicular to the light guide (i.e., cover **18**). The optical detector **26** and optical emitter **24** are configured to detect and generate light substantially perpendicular to the light-guiding region **19** of the light guide **18**. For example, the light guide **18** defines an axial direction A_1. The optical emitter **24** and optical detector **26** are each oriented such that their respective primary emitting and detecting planes P_1, P_2 are each facing a respective direction A_3, A_2 that is substantially perpendicular to direction A_1. The orientation of the optical emitter **24** and optical detector **26** in FIG. **4**A may be convenient for manufacturing purposes, where side-emitting LEDs and side-detecting photodetectors can couple directly to the light-guiding region **19** for generating light **111** and detecting light **110**. This may relax size constraints for an earbud **30** because the dimensions of the light-guiding region **19** may be independent of the optical emitter **24** and optical detector **26**.

[0109] FIG. **4**B illustrates the light-guiding earbud **30** of FIG. **4**A modified such that the earbud cover **18** and cladding material **21** are elongated to reach deeper within the ear canal C of a subject, and closer to the tympanic membrane, for example. In the illustrated embodiment of FIG. **4**B, there are no apertures in the housing **16** or cover **18**. Acoustic energy **44** from/to the speaker/microphone passes through the material of the cover **18** and housing **16**. The illustrated elongated configuration serves as both an optical light-guiding region and an acoustic wave-guiding region.

[0110] FIG. **4**C illustrates the light-guiding earbud **30** of FIG. **4**A modified such that the earbud cover **18** and cladding material **21** are elongated to reach deeper within the ear canal C of a subject, and closer to the tympanic membrane, for example. In the illustrated embodiment of FIG. **4**C, apertures **34***a*, **34***b* in the housing **16** and cover **18** are provided. As such, the optical light-guiding region **19** and the acoustic wave-guiding region **54** are isolated from each other. The light-guiding region **19** may be a light transmissive material, such as a dielectric material, and the acoustic wave-guiding region **54** may be air or another material, and the separation between these regions may be defined by at least part of the cladding material **21**. Embodiments of the present invention may include multiple openings **34***a*, **34***b* in the housing **16** and cover **18**. The separation between the light-guiding region **19** and the acoustic wave-guiding region **54** may be defined by other structures composed of a variety of possible materials. Specific examples of these materials include plastic molding, metals, polymeric structures, composite structures, or the like.

[0111] FIG. **4**D illustrates the light-guiding earbud **30** of FIG. **4**A modified such that the earbud cover **18** and cladding material **21** are elongated to reach deeper within the ear canal C of a subject, and closer to the tympanic membrane, for example. In the illustrated embodiment of FIG. **4**D, the area within the housing **16** may be air, silicone, plastic, or any material capable of passing sound. As such, at opening **34***b*, an interface exists between the material of the light-guiding region **19** and the material within the housing **16**. In some embodiments, the light-guiding region **19** and the region within the housing **16** may both be air. In other embodiments, the light-guiding region **19** and the region within the housing **16** may be formed from the same or different materials. In some embodiments, the region within the housing **16** may be formed from an optical wave guiding material identical or similar to the material in the light-guiding region **19**.

[0112] In the embodiments of FIGS. **4**B-**4**D, the optical energy **110** coming from the ear may include optical wavelengths, such as IR wavelengths, emitting from the tympanic membrane due to black body radiation. If the optical detector **26** is configured to measure this black body radiation, then the earbud can be used to measure tympanic temperature, blood analyte levels, neurological, electrical activity, or metabolic activity of the earbud wearer.

[0113] Referring to FIG. **5**, a light-guiding earbud **30** is configured for optical coupling that is parallel to the light guide (i.e., cover **18**) as in the embodiment of FIG. **3**. However, the embodiment of FIG. **5** does not include a separate

earbud housing. Instead, the light guide **18** serves the function of the earbud housing. In addition, the light guide **18** includes multiple windows **18***w* formed in the cladding material **21** on the outer surface **18***a* of the cover and through which light **111** emitted by the light emitter **24** passes and multiple windows **18***w* through which scattered light **110** passes into the light guide **18** to be directed to the light detector **26**. These openings **18***w* may extend circumferentially around the light guide **18** or may partially extend circumferentially around portions of the light guide **18**. In some embodiments of this invention, the earbud housing and light guide **18** may be separated, as shown in other figures.

[0114] In addition, the illustrated light guide **18** of FIG. **5** is surrounded by a layer **29** of light transmissive material. One or more lenses **29**L are formed in this layer **29** and are in optical communication with respective windows **18***w* in the light guide **18**. In the illustrated embodiment, a lens **29**L is in optical communication with a respective window **18***w* through which emitted light **111** passes, and a respective window **18***w* through which scattered light **110** passes. Lenses **29**L are configured to focus inspection light **111** onto a particular region of the ear. Lenses **29**L are configured to help collect scattered light **110** and direct the scattered light **110** into the light guiding region **19**. In some embodiments, these lenses **29**L may be a molded part of the light guide **18**. The illustrated location of lenses **29**L in FIG. **5** is non-limiting, and the lenses **29**L may be located wherever optical coupling between the earbud and ear is desired. Though convex lens embodiments are shown in FIG. **5**, this is not meant to limit embodiments of the present invention. Depending on the desired optical coupling and configuration of the earbud against the ear, a variety of lens types and shapes may be useful, such as convex, positive or negative meniscus, plano-convex, planoconcave, biconvex, biconcave, converging, diverging, and the like.

[0115] Referring now to FIG. **6**, a light guiding earbud **30**, according to some embodiments of the present invention, includes a base **50**, an earbud housing **16** extending outwardly from the base **50** that is configured to be positioned within an ear E of a subject, and a cover **18** of light transmissive material surrounding the earbud housing **16** that forms a light-guiding region **19**. The earbud housing **16** is in acoustical communication with a speaker **22** and includes at least one aperture **34***a* through which sound from the speaker **22** can pass. The earbud housing **16** encloses the speaker **22**, an optical emitter **24** and an optical detector **26** as illustrated. An additional light detector **26** is located on the base **50** but is not surrounded by the earbud housing **16**.

[0116] The earbud housing **16** is formed of a cladding material. The cladding material may be reflective material in some embodiments. In other embodiments, the cladding material may be optically transparent or mostly transparent with a lower index of refraction than the light transmissive material of the cover **18**. In some embodiments, the earbud housing **16** may be replaced by air, such that the cladding region is air. Air may have a smaller index of refraction than that of the cover **18**, supporting light transmission along the cover **18**. In other embodiments, a cladding region exists between the earbud housing **16** and the light-guiding region **19**. In another embodiment, a cladding region exists covering the outside of light-guiding region **19**, with the exception of regions surrounding the lens regions **18**L.

[0117] A plurality of windows **16***w* are formed in the earbud housing **16** at selected locations to permit light emitted by the light emitter **24** to pass therethrough. In some embodiments, the earbud housing **16** may have translucent or transparent material that serves the function of one or more windows **16***w*. The cover **18** includes a plurality of lenses **18**L that are in optical communication with respective windows **16***w* in the earbud housing **16**. These lenses **18**L are configured to focus light **111** passing through a respective window **16***w* towards a particular region of the ear of a subject, and to help collect scattered light **110** and direct the scattered light **110** into the earbud housing **16** towards the light detector **26**.

[0118] The earbud **30** of FIG. **6**, via the locations of windows **16***w*, produces isotropic optical coupling, such that the light generated by the optical emitter **24** is roughly identical in all directions with respect to the earbud housing **16**. The inspection light **111** generated by the optical emitter **24** passes isotropically into the light guiding region **19** through the windows **16***w*.

[0119] A benefit of light guiding earbud **30** of FIG. **6** is that manufacturing may not require alignment of the light-guiding region **19** with respect to the optical emitter **24** and detector **26**. This may be in part because the optical energy density generated/detected by the optical emitter/detector may be the same, or relatively uniform, within the earbud housing **16** regardless of alignment of the light guide **18** with respect to the earbud housing **16** or regardless of alignment between the optical emitters/detectors and the earbud housing **16**. This effect may be similar to that observed in "integrating spheres" commonly used for quantifying the lumen output of an optical source. Namely, because the light from the optical emitter **24** may be substantially isotropic and not focused, there is less restriction on the alignment of the earbud housing and earbud cover with respect to the optical emitter **24** or optical detector **26**.

[0120] Referring now to FIGS. **7**A-**7**B, a light guiding earbud **30**, according to some embodiments of the present invention, includes a base **50**, and an earbud housing **16** extending outwardly from the base **50** that is configured to be positioned within an ear E of a subject. The earbud housing **16** is formed from translucent material such that light can pass therethrough and forms a light-guiding region **19**. The earbud housing **16** is in acoustical communication with a speaker **22** and includes at least one aperture **34***a* through which sound from the speaker **22** can pass. A pair of optical detectors **26** are secured to the base **50** but are not surrounded by the earbud housing **16**, as illustrated.

[0121] The earbud housing **16** includes a flexible optical emitter **24** integrally formed within the housing **16**, as illustrated. The optical emitter **24** is flexible such that it may be positioned around the earbud in an earbud form-factor. The flexible optical emitter **24** is configured to be conformable to an earbud shape and configuration. The flexible optical emitter **24** may be in, near, or part of the earbud housing **16**, cladding material **21**, or housing **16**. In some embodiments, the flexible optical emitter **24** may be part of a flexible optical circuit inserted into an earbud **30**.

[0122] The optical detectors **26** positioned outside the earbud housing **16** of the earbud **30** of FIGS. **7**A-**7**B collect scattered light from an ear originating from inspection light **111** generated by the flexible optical emitter **24**. The flexible optical emitter **24** may be mounted to the earbud base **50** through one or more electrical connectors **24***a*. In some embodiments, these may be soldered, wired, or detachable connectors. In some embodiments, the flexible optical emitter **24** may include a flexible optical detector. In some embodi-

ments, the flexible optical emitter **24** may be part of a flexible optical circuit comprising the form-factor of **24** shown in FIGS. **7**A-**7**B, where the flexible optical circuit may include one or more optical emitters and detectors as well as amplifiers, microprocessors, wireless circuitry, and signal conditioning electronics. In some embodiments, the flexible optical circuit may include a complete chipset for physiological and environmental detection and for wired/wireless transfer of data to a remote location. For example, these flexible devices may include an organic LED (OLED) and an organic optical detector circuit. This embodiment may be useful for generating a diffuse light beam towards the ear region and for detecting a diffuse optical scatter response from the ear region. In some embodiments, the emitter and detector on the flexible optical emitter **24** may be a traditional light-emitting diode (LED) and photodetector (PD) integrated onto a flexible printed circuit board. In other embodiments, transparent solid state optical emitters, detectors, or switches may be used. For example, an electrically controlled liquid crystal matrix may be embedded within an earbud, covering the flexible optical emitter **24**. This may allow localized control of light flow to selected areas from/to the earbud going towards/away-from the ear. Additionally, this may allow localized control of light wavelength to selected areas.

[0123] Referring now to FIGS. **8**A-**8**B, a light guiding earbud **30**, according to some embodiments of the present invention, includes a base **50**, an earbud housing **16** extending outwardly from the base **50** that is configured to be positioned within an ear of a subject, and a cover **18** that surrounds the earbud housing **16**. The earbud housing **16** is in acoustical communication with a speaker **22** and includes at least one aperture **34***a* through which sound from the speaker **22** can pass. The cover **18** includes at least one aperture **34***b* through which sound from the speaker **22** can pass. The cover **18** includes a cladding material **21** on the outer surface **18***a* thereof, except at end portion **18***f*, as illustrated. In the illustrated embodiment, there is no cladding material on the cover inner surface **18***b*. The housing **16** is in contact with the cover inner surface **18***b* and serves as a cladding layer to define the light guiding region **19**. The cover **18** with the illustrated cladding material **18***c* serves as a light guide that delivers light from the optical emitters **24** into an ear canal of a subject through cover end portion **18***f*. The cover **18** also collects light through end portion **18***f* and delivers the collected light to the optical detectors **26**. Various configurations and arrangements of optical emitters and detectors may be utilized in accordance with embodiments of the present invention.

[0124] In the illustrated embodiment of FIGS. **8**A-**8**B, to reduce the risk of the inspection light **111** interrogating and saturating the optical detectors **26**, a bottom portion **16***a* of the earbud housing **16** includes a light blocking region that blocks light from passing therethrough. This light blocking region **16***a* may be a black-painted region, an optically opaque region, or a material or structure that blocks light transmission. The illustrated configuration of the earbud housing **16** and bottom portion **16***a* may help confine inspection light **111** generated by the optical emitters **24** within the light-guiding layer (i.e., **19**), guiding this light towards the ear region through the end portion **18***f* of the earbud **30**.

[0125] In some embodiments, as illustrated in FIG. **8**C, the earbud housing **16** may be at least partially reflective to scatter light within the cavity defined by the earbud housing **16**. In such case, the optical energy **111** may exit the earbud **30** through apertures **34***a*, **34***b* in the housing **16** and cover **18**. An advantage of this configuration is that light **111** can be focused on a particular region of the ear where a particular physiological activity may be located. Also, this configuration may reduce unwanted optical signals from regions that may not be relevant to the physiological activity of interest. Although FIG. **8**C shows the apertures **34***a*, **34***b* positioned toward the tympanic membrane, the apertures **34***a*, **34***b* may be located at one or more other locations about the earbud **30**. For example, an aperture may be formed in the housing **16** and cover **18** at the location where the earbud **30** contacts the antitragus of an ear to allow optical energy **111** to interrogate the antitragus region of the ear.

[0126] In some embodiments, as illustrated in FIG. **8**D, the earbud housing **16** may contain a material that reflects one or more wavelengths of light and transmits one or more wavelengths of light. For example, the earbud housing **16** may be comprised of a polymer, plastic, glass, composite material, or resin that reflects visible wavelengths and transmits IR wavelengths. Exemplary materials include color absorbing materials, such as organic dyes, found in photographic film. Alternatively, the earbud housing **16** may include an optical filter region, such as a Bragg filter or other optical filter layer deposited on one or more sides of the housing region. If an optical detector **26'** is configured to measure visible wavelengths only, then the optical energy detected by optical detector **26'** may consist primarily of optical energy scattered from the earbud housing **16**, and the optical energy detected by the optical detectors **26** may consist of optical energy scattered from the ear region. This configuration may be useful because the signal from the optical detector **26'** may represent motion noise which may be removed from the signal derived from the optical detectors **26**, which may contain physiological information and motion noise.

[0127] Referring now to FIGS. **9**A-**9**B, a light guiding earbud **30**, according to some embodiments of the present invention, includes a base **50**, an earbud housing **16** extending outwardly from the base **50** that is configured to be positioned within an ear of a subject, and a cover **18** surrounding the earbud housing **16**. The earbud housing **16** is in acoustical communication with a speaker **22** and includes at least one aperture **34***a* through which sound from the speaker **22** can pass. The cover **18** includes at least one aperture **34***b* through which sound from the speaker **22** can pass. A pair of optical emitters **24** are secured to the base **50** and are surrounded by the earbud housing **16**, as illustrated. An optical detector **26** is secured to the base **50** and is not surrounded by the earbud housing **16**, as illustrated. The cover **18** serves as a light guide that delivers light from the optical emitters **24** into an ear canal of a subject.

[0128] The light-guiding region **19** of the cover **18** is designed to diffuse light and/or to generate luminescence. In this embodiment, the light-guiding region **19** includes at least one optical scatter or luminescence region. The optical scatter or luminescence region may be located anywhere within the earbud in the optical path of the optical emitters **24**, but preferably within or about the cladding layer itself. When inspection light **111** generated by the optical emitters **24** is scattered or by an optical scatter region, this light may form a more diffuse optical beam **111***a* that is more uniform across the earbud **30** than the inspection light **111** generated by the optical emitters **24**. This diffused beam, having an intensity distribution being less sensitive to motion of the ear, may be useful in alleviating motion artifacts in the scattered light coming from the ear, such that the scattered light coming from

the ear, measured by the optical detector **26**, is more indicative of blood flow changes within blood vessels and less indicative of mouth movements and body motion. The optical scatter region within the light-guiding region **19** may be at least partially comprised of impurities or morphological differences within the light-guiding region. An example of such impurities may include point defects, volume defects, native defects, metallics, polymers, microspheres, phosphors, luminescent particles, air pockets, particles, particulate matter, and the like. An example of morphological differences may include density variations, roughness, air pockets, stoichiometry variations, and the like. As a specific example, the light-guiding region **19** may comprise a transparent material, such as glass, a polymer, or silicone, and a luminescent impurity, such as a phosphor or luminescent polymer or molecule, may be integrated within the light-guiding region. This configuration may generate luminescence within the light-guiding region **19** in response to optical excitation from the optical emitters **24**. In other embodiments, nanoscale fluctuations or impurities may be used to diffuse or manipulate light through the earbud. Examples of nanoscale fluctuations or impurities may include quantum dots, rods, wires, doughnuts, or the like.

[0129] FIG. **9**C illustrates an exemplary homogeneous distribution of luminescent particles **44**, such as phosphors, embedded within the earbud cover **18**, according to some embodiments of the present invention. FIGS. **9**D-**9**E illustrate an exemplary distribution of luminescent particles **44**, such as phosphors, where the particles are distributed near one or more surfaces of the earbud cover **18**, according to some embodiments of the present invention.

[0130] In another embodiment, an optical scatter or luminescent region may be at least partially located in a separate region from the light-guiding region **19**, such as a coating, that may be in physical contact with the light-guiding region **19**.

[0131] In another embodiment, the optical scatter region or luminescent region may include multiple layers of light-guiding material having at least one dissimilar optical property, such as a dissimilar index of refraction, transparency, reflectivity, or the like. In another embodiment, the optical scatter region may include one or more patterned regions having at least one dissimilar optical property.

[0132] In another embodiment, the optical scatter or luminescent region may be distributed at select locations throughout the earbud.

[0133] FIG. **10** illustrates relevant anatomy of a human ear E. Blood vessels are located across the ear, but it has been discovered that photoplethysmography (PPG) signals are the strongest near the antitragus, tragus, lobule, and portions of the acoustic meatus, and the ear canal. The antitragus is a particularly attractive location for photoplethysmography because a strong PPG signal can be derived with minimal motion artifacts associated with running and mouth motion.

[0134] Referring now to FIGS. **11**A-**11**B, a light guiding earbud **30**, according to some embodiments of the present invention, includes a base **50**, an earbud housing **16** extending outwardly from the base **50** that is configured to be positioned within an ear of a subject, and a cover **18** surrounding the earbud housing **16**. The earbud housing **16** is in acoustical communication with a speaker **22** and includes at least one aperture **34***a* through which sound from the speaker **22** can pass. The cover **18** includes at least one aperture **34***b* through which sound from the speaker **22** can pass. The cover **18** serves as a light guide for directing light into an ear of a subject and defines a light-guiding region **19**. The illustrated earbud **30** is configured to focus light towards the antitragus of the ear of a human. In the illustrated embodiment, there is no cladding material on the outer surface **18***a* or inner surface **18***b* of the cover **18**. Air serves as a cladding layer at the outer surface **18***a* and the housing **16** serves as a cladding layer at the inner surface **18***b*. Air may serve as a sufficient cladding layer due to the index of refraction difference between air and the light guiding layer. Namely, the index of refraction of the light-guiding layer **19** may be more than that of air.

[0135] A sensor module **70** is located near the earbud periphery, as illustrated. This sensor module **70** is shown in more detail in FIGS. **12***a*-**12**B, and is described below. Three benefits of locating the sensor module **70** near the periphery of the light-guiding earbud **30** are: 1) PPG signals near the antitragus are less corrupted by motion artifacts than are PPG signals in other blood-vessel-rich regions of the ear; 2) the sensor module **70** may be designed somewhat independently of the earbud **30**, liberating earbud comfort maximization from PPG signal maximization; and 3) because design constraints may be liberated, sensors need not be located in the acoustic cavity (i.e., within the earbud housing **16**), allowing sound to pass through the acoustic orifices **34***a*, **34***b* with minimal interference. In this embodiment, it may be beneficial to incorporate lenses within the cover **18**, similar to the lenses **18**L of FIG. **6**. It may be beneficial to extend the light-guiding region **19** of the cover **18** near the location where the earbud **30** rests near the antitragus. This light-guide extension **19***a* serves as an additional light-coupling region and may improve optical coupling from the light-guiding region **19** to an ear region and/or improve optical coupling from an ear region to the light-guiding region **19**, including the antitragus and portions of the acoustic meatus. This is because this extended light-guiding region **19***a* may provide skin contact between the light guiding layer **19** and the skin, providing better optomechanical stability and optical coupling. In this embodiment, light may couple into the extended light-guiding region **19***a*, from an optical emitter **24**, and into the ear region. Similarly, light may couple from the ear region, into the extended light-guiding region **19***a*, and to the optical detector **26**. This extended light-guiding region **19***a* may appear as a bulb or lens near the bottom of the earbud cover **18**.

[0136] FIGS. **12**A-**12**B illustrate respective opposite sides of a sensor module **70** that may be located near the periphery of an earbud **30**, for example as illustrated in FIGS. **11**A-**11**B, according to some embodiments of the present invention. Sensor module **70** may include a number of electronic components capable of converting various forms of energy into an electrical signal and digitizing the signal. For example, the sensor module **70** may include light-emitting diodes, optical sensors, accelerometers, capacitive sensors, inertial sensors, mechanical sensors, electromagnetic sensors, thermal sensors, nuclear radiation sensors, biological sensors, and the like. In some embodiments, the optical emitters of this invention may be a combination of side-emitting, edge-emitting, or surface-emitting light-emitting diodes (LEDs) or laser diodes (LDs).

[0137] In the illustrated embodiment of FIGS. **12**A-**12**B, the sensor module **70** includes two sets of optical emitters **24***a*, **24***b*. The first set of optical emitters **24***a* may be side-emitters (or edge-emitters) that are located at the top of the module **70** and direct light towards the earbud tip (e.g., cover

end portion **18***f*, FIG. **8**A) and towards the acoustic meatus and/or ear canal of the ear. The second set of optical emitters **24***b* may be located near the middle of the module **70** and may direct light in a beam that is largely perpendicular to that of the side-emitters **24***a*. In this particular embodiment, a single optical emitter **24***b* is shown mounted on a circuit board **70***c* such that this optical emitter **24***b* directs light towards the antitragus, which is located largely perpendicular to the acoustic meatus.

[0138] The optical energy generated by these optical emitters **24***a*, **24***b* may be scattered by blood vessels in the ear. This scattered light may be at least partially captured by the optical detectors **26**. This light may be digitized by an optical detector **26** itself or with other circuitry on the sensor module circuit board **70***c*. The light-guiding design of the aforementioned light-guiding earbuds **30** may direct light towards each of these detectors **26**. For example, this may be accomplished via the light-guiding earbud **30**, wherein a lens (e.g., **18**L, FIG. **6**) facilitates inspection light coupling from the optical emitters **24** into the ear region and facilitates scattered light coupling to the optical detectors **26** from the ear region. Additional sensor components **27***a*, **27***b* may be used to measure an orthogonal energy component, facilitate sensor analysis, and thus help generate physiological assessments. For example, sensor components **27***a*, **27***b* may be thermal sensors for measuring the temperature of the inner ear (using the thermal sensors **27***a* facing the ear region) with respect to the outer ear (using the thermal sensor **27***b* facing away from the ear region). By subtracting the two measured digitized temperatures from these two sensors **27***a*, **27***b*, an indication of heat flow from the ear can be generated. This temperature differential may be mathematically related to metabolic rate. For example, this temperature differential may be directly proportional metabolic rate. These temperature sensors may include thermistors, thermopiles, thermocouples, solid state sensors, or the like. They may be designed to measure thermal conduction, convection, radiation, or a combination of these temperature components.

[0139] The earbud-facing side (FIG. **12**B) of the sensor module **70** may include sensors that do not need to be located on the antitragus-facing side of the sensor module. For example, one or more inertial sensors **27***c* may be located on the earbud-facing side (FIG. **12**B) of the sensor module **70**. In a particular embodiment, the inertial sensor **27***c* may be a 3-axis accelerometer, and because this sensor does not need to optically couple with the ear region, a better use of sensor real estate may be to locate this sensor on the earbud-facing side of the sensor module **70**. Additional optical emitters **24***a*, **24***b* may be located on the earbud-facing side to facilitate an optical noise reference. Namely, as the person wearing the earbud module **30** moves around, the interrogation light generated by the optical emitters **24***a*, **24***b* may be scattered off the earbud and be detected by optical detectors **27***d*. This scattered light intensity, phase, and/or frequency due to body motion may be proportional to the motion-related component of the scattered light intensity from the ear region. The motion-related component is the component due to the physical motion of the ear and not the component related to blood flow. Thus, the optical scatter signal collected by the detectors **27***d* may provide a suitable noise reference for an adaptive filter to remove motion artifacts from the scattered light from the ear region, generating an output signal that is primarily related to blood flow (which may be the desired signal). In the same token, the scattered light reaching the optical detectors **27***d* may be used to generate a measure of activity. The intensity, phase, and frequency of this scattered light may be related to physical activity. Sinusoidal variations of the heart rate waveform may be counted digitally, by identifying and counting crests and peaks in the waveform, to generate an effective step count. Embodiments of the present invention, however, are not limited to the illustrated location of components in the sensor module **70**. Various types and orientations of components may be utilized without limitation.

[0140] FIG. **19** illustrates the optical interaction between the sensor module **70** of FIGS. **12**A-**12**B and the skin of a subject. The sensor module **70** is shown in a reflective pulse oximetry setup **80** where reflected wavelengths **110** are measured, as opposed to measuring transmitted wavelengths. The optical emitter and optical detector wavelengths for pulse oximetry and photoplethysmography may include ultraviolet, visible, and infrared wavelengths. In the illustrated embodiment, an optical source-detector assembly **71** is integrated into sensor module **70** to generate optical wavelengths **111** and monitor the resulting scattered optical energy **110**. The optical source-detector assembly **71** contains one or more optical sources emitting one or more optical wavelengths, as well as one or more optical detectors detecting one or more optical wavelengths.

[0141] The epidermis **90**, dermis **91**, and subcutaneous **92** layers of skin tissue are shown in FIG. **19** for reference. The scattered optical energy **110** may be modulated in intensity by changes in blood flow in the blood vessels, changes in physical motion of the body, respiration, heart rate, and other physiological changes. In some cases, the scattered optical energy may be luminescent energy from the skin, blood, blood analytes, drugs, or other materials in the body.

[0142] As previously described, the optical scatter signal collected by the detectors **27***d* may provide a suitable noise reference for an adaptive filter to remove motion artifacts from the scattered light from the ear region, generating an output signal that is primarily related to blood flow (which may be the desired signal). This is because light detected by these detectors would come from light that has not been scattered by a physiological region but rather light that has been scattered from a region of the associated earpiece that may move along with the ear. Thus, the scattered light reaching the optical detectors **27***d* may be used to generate a measure of activity.

[0143] FIG. **13** illustrates the basic configuration of an adaptive noise cancellation scheme **200** for extracting a physiological signal from noise. The two types of sensor inputs are represented by the terms "Channel A" and "Channel B". Channel A refers to inputs from sensors that collect physiological information plus noise information, and Channel B refers to inputs from sensors that collect primarily (or substantially) noise information. Channel B information is passed through an electronic filter **203** whose properties are updated adaptively and dynamically. The filter **203** properties are updated to minimize the difference between Channel A and the post-processed Channel B, denoted as B^. In this way, noise is removed from Channel A and Channel C contains predominantly physiological information from which parameters such as blood flow, heart rate, blood analyte levels, breathing rate or volume, blood oxygen levels, and the like may be calculated. It is important to note that the Channel A information can still be useful despite the presence of noise, and the noise information may still be utilized for the computation of relevant parameters. For instance, the residual

noise information in Channel A may be extracted by a parameter estimator **201** and the output in Channel D may be one or more activity assessments or the like. Similarly, the raw noise channel, Channel B, may be post-processed by a parameter estimator **205** to extract activity assessments for Channel E. Activity assessments may include exertion, activity level, distance traveled, speed, step count, pace, limb motion, poise, performance of an activity, mastication rate, intensity, or volume, and the like. The noise cancellation scheme **200** may be integrated into the firmware of a microprocessor or the like.

[0144] Although the embodiment of FIG. **13** for cancelling motion noise has been presented for an earbud configuration, this does not limit the invention to earbuds. An element of the adaptive noise cancellation scheme **200** for cancelling motion noise with an optical noise source may be that the optical detectors (such as **27***d*) are configured such that they do not receive scattered light from a physiological region while the detectors are simultaneously receiving scattered light from a region that is moving in synchronization with the physiological region. Even the slightest physiological signal existing in the optical noise reference of Channel B may prevent the adaptive filter from working properly such that the physiological signal may inadvertently be removed altogether by the filter **203**. Furthermore, although the noise source Channel B is described as an optical noise source, other forms of energy may be used in this invention. Namely, any inertial sensor input may constitute the input for Channel B. More specifically, a sensor for measuring changes in capacitance along the earbud with respect to the ear may provide an inertial noise reference without also measuring physiological information. Similarly, an accelerometer may provide an inertial noise reference without also measuring physiological information. An inductive sensor may also provide an inertial noise reference without also measuring physiological information. For each noise source, a defining element may be that the noise source may be configured to measure physical motion only (or mostly) and not physiological information (such as blood flow, blood oxygen, blood pressure, and the like). The utility of an optical noise source is that because the optical signal Channel A and the optical noise Channel B have the same linearity response, the adaptive filter scheme **200** may be more effective than the case where the signal and noise channels operate via different forms of sensed energy. For example, the response linearity characteristics of an accelerometer sensor in response to inertial changes may not be the same as the response linearity characteristics of an optical sensor.

[0145] The adaptive noise cancellation scheme **200** for cancelling motion noise with an optical source (specifically an infrared LED) has been demonstrated in the laboratory, with a human wearing a light-guiding earbud while resting, jogging, and running over a treadmill, and various data summaries **300***a*-**300***d* are presented in FIGS. **14**A-**14**D. The data was recorded by a chip and memory card embedded in an earbud **30**, having electrical connectivity with the sensor module **70** within the earbud **30**. The raw signal in low motion **300***a* and raw signal in high motion **300***c* may be equated with the signal of Channel A of FIG. **13**. Similarly, the "blocked channel" in low motion **300***b* and "blocked channel" in high motion **300***d* may be equated with Channel B of FIG. **13**. In this experiment, the "block channel" consisted of an optical noise source, wherein the optical noise source included an optical emitter-detector module such as **70** of FIGS. **12**A-**12**B. However, instead of being exposed to the ear, the optical emitter-detector module was covered with a layer of clear silicone that was then covered by black tape to prevent light from the emitter (such as **24***a* and **24***b*) from reaching the ear. Thus, scatter from the black tape was scattered back to the emitter-detector module through the silicone and sensed as motion noise by the detectors (such as **26** and **27***d*). In a sense, for this configuration, the optical channel to the human ear is "blocked", hence the term "blocked channel". The purpose of the clear silicone below the black tape was to: 1) provide an unobstructed, transparent optical scatter path for the IR light and 2) provide motion sensitivity similar to that of human skin, as silicone has a vibration response that may be similar to that of human skin.

[0146] FIGS. **14**A-**14**D show that the raw signal in low motion **300***a* indicates blood flow pulses which can be translated as heart rate. This is because each blood flow pulse represents one heart beat. However, the raw signal in high motion **300***c* indicates measured mostly physical activity. This is evident by the fact that the high motion signal **300***c* matches the corresponding blocked channel signal **300***d*, and the blocked channel in high motion **300***d* was found to have a substantially identical beat profile with the measured steps/second of the runner.

[0147] FIG. **15** is a graph of processed physiological signal data from a headset having one or more light-guiding earbuds **30**, according to some embodiments of the present invention. Specifically, FIG. **15** shows the analysis results **400** of the data summaries **300***a*-**300***d* presented in FIGS. **14**A-**14**D of blood flow (y-axis) versus time (x-axis) following two data processing sequences to extract heart rate. One sequence incorporated the adaptive filtering process **200** of FIG. **13** as well as a beat finder processing step. The second sequence incorporated the beat finder processing step without the adaptive filtering process **200** of FIG. **13**. The beat finder process counts each heart beat by monitoring the peaks and valleys of each pulse, such as the peaks and valleys shown in the graph **300***a* of FIG. **14**A. As shown in FIG. **15**, the beat finder was effective at measuring heart rate during resting and jogging. However, the beat finder alone was not sufficient for monitoring heart rate during running. This is because at high motion, the signal **300***d* (FIG. **14**D) associated with footsteps is strong enough to overwhelm the smaller signal associated with heart rate, and so the motion-related contribution dominated the overall signal **300***d*. Thus, the beat finder cannot distinguish heart beats from footsteps. By employing the adaptive filtering process **200** (FIG. **13**) before the beat finder process, the footstep motion artifacts during running were effectively removed from the sensor signal (Channel A of FIG. **13**) such that the output signal (Channel C of FIG. **13**) contained blood flow information with minimal motion artifacts. Thus, this output signal contained blood flow pulse signals that could then be "counted" by the beat finder to generate an accurate heart rate assessment.

[0148] In the specific analysis results **400** of FIG. **15**, a beat finder was employed, following the adaptive filter process **200** of FIG. **13**, to count heart beats. A more general method **500** for extracting physiological information from sensor signals in the midst of noise is illustrated in FIG. **16**. The first block (block **510**) represents the pre-adaptive signal conditioning stage. This process may utilize a combination of filters to remove frequency bands outside the range of interest. For example, a combination of band-pass, low-pass, and/or high-pass filters (such as digital filters) may be used. The second block (block **520**) represents an adaptive filtering

process such as the process **200** described in FIG. **13**. This process may utilize the pre-conditioned signals from block **510** as inputs into an adaptive filter that reduces motion or environmental artifacts and noise in the primary data channel. The third block (block **530**) represents the parameter extraction stage. This process may utilize a combination of signal conditioning filters in addition to peak finding (such as beat finding) algorithms to calculate properties of interest (e.g. heart rate, blood flow, heart rate variability, respiration rate, blood gas/analyte level, and the like). The method **500** of FIG. **16** may be encoded in the firmware of a microprocessor (or similar electronics) to facilitate real-time processing of physiological information.

[0149] FIG. **17** is a block diagram that illustrates sensor signals being processed into a digital data string including activity data and physiological data using the method **500** of FIG. **16**, according to some embodiments of the present invention. Optical detectors **26** and optical emitters **24** may include digitizing circuitry such that they may be connected serially to a digital bus **600**. Data from the detectors **26** may be processed by a processor/multiplexer **602** to generate multiple data outputs **604** in a serial format at the output **606** of the processor **602**. In some embodiments, the processing methods may involve one or more of the methods described in FIGS. **13**, **14**A-**14**D, **15** and **16**. The multiple data outputs **604** may be generated by the processor/multiplexer **602** by time division multiplexing or the like. The processor **602** may execute one or more serial processing methods, wherein the outputs of a plurality of processing steps may provide information that is fed into the multiplexed data outputs **604**.

[0150] The multiplexed data outputs **604** may be a serial data string of activity and physiological information **700** (FIG. **18**) parsed out specifically such that an application-specific interface (API) can utilize the data as required for a particular application. The applications may use this data to generate high-level assessments, such as overall fitness or overall health. Furthermore, the individual data elements of the data string can be used to facilitate better assessments of other individual data elements of the data string. As a specific example, the Blood Flow data string may contain information on the first and second derivatives of each blood pulse. This information may be processed from a PPG signal by running the adaptively filtered heart rate signal through a slope-finder algorithm (such as a differentiator circuit). In another example, the filtered PPG signal may be run through an integration circuit to estimate blood volume over each blood pulse. This information may then be used to assess blood pressure and blood oxygen levels more accurately than a direct measurement of blood pressure or blood oxygen levels.

[0151] In some embodiments of the invention, new methods of generating physiological assessment algorithms are enabled. These new methods may be achieved by measuring each data output of the data output string **604** in real time while an earbud user is also wearing one or more benchmark sensors. Principal component analysis, multiple linear regression, or other statistical or machine learning techniques can then be used to generate statistical relationships between the data outputs **604** and high level assessments measured simultaneously by the benchmark sensors. These benchmark sensors may measure aerobic fitness level, VO_2max, blood pressure, blood analyte levels, and the like. The relationships between the earbud sensor and benchmark sensor readings may be translated as algorithms embedded in the earbud, wherein each algorithm generates at least one assessment for the earbud user. In some cases, Bland-Altman plots of the earbud-derived assessment value versus the benchmark value may be used to judge the effectiveness of the algorithm, and this information may then feedback into improving the said earbud-derived assessment algorithm. Examples of these assessments may include aerobic fitness level, VO_2max, blood pressure, blood analyte levels (such as blood glucose, oxygen, carbon monoxide, etc.), and the like.

[0152] In some cases, it may be important to remove the effects of ambient optical noise from the physiological signal of a light-guiding earbud **30**. In such cases, one or more optical detectors **26** may be configured to measure outdoor or ambient lighting, and this information may be fed back into the processor **602** (FIG. **17**) to extract external optical noise from the physiological signal. For example, some optical detectors may be configured to measure light from the ear, whereas others may be configured to measure light from the ambient environment, such as sunlight, room light, headlights, or the like. This may be achieved by directing the optical detectors towards and away from the ear, respectively. In a specific example, the ambient light reaching the optical detectors **26** may generate an undesirable sinusoidal response on an optical detector that is configured to measure light from the ear. This undesirable sinusoidal noise response may be generated as an earbud user moves their head from side to side while running. Thus, Channel A of the adaptive filter **200** (FIG. **13**) may include physiological information plus undesired ambient optical noise information. To remove this noise from the final output Channel C, the output of the optical detector configured to measure ambient optical noise may be an input (Channel B of FIG. **13**) into the adaptive filter **200**. In this way, ambient noise from Channel A may be removed to generate a mostly physiological signal in Channel C.

[0153] The optical detectors **26** and emitters **24** may be of multiple wavelengths, with the goal of providing specialized physiological information for each wavelength. Referring to FIG. **19**, for example, violet or UV light may be used to measure motion-related aspects of the ear, as violet and UV light may not penetrate greatly through the skin of the ear. Green, red, and IR wavelengths may have deeper penetration and provide information on the blood vessels and blood analyte levels. Blue wavelengths may be particularly useful for gauging changes in the size of the blood vessels.

[0154] Embodiments of the present invention may be more generally applied to non-optical or mix-optical configurations. For example, one or more of the detectors **26** and emitters **24** may be mechanical, acoustical, electrical, gravimetric, or nuclear detectors and emitters, all providing physiological information to the processor **602** (FIG. **17**). For example, an accelerometer or capacitor may be used as a detector **26** for the noise reference (Channel B) input of an adaptive filter running in real-time on the processor **602**.

[0155] Referring to FIG. **20**, a chipset **800** for use in light-guiding earbuds **30**, according to some embodiments of the present invention, may include optical emitters, optical detectors, mechanical, acoustical, electrical, gravimetric, nuclear detectors, additional sensors, signal processing, power regulation, digital control, and input/output lines. The chipset **800** may include firmware for signal extraction and for generating physiological assessments from information derived from the sensors and noise sources. One benefit of the chipset configuration is that the chipset **800** may be fully or partially integrated and hence compact and scalable to a wide range of products. To be integrated with a light-guiding earbud **30**, the

chipset **800** may be aligned such that the sensor region has an exposed window to a subject's ear. For example, the chipset **800** may be attached to the earbud base **50** or an earbud sensor module **70** and aligned line-of-sight through an acoustic orifice of an earbud and/or through a transparent end portion of an earbud **30** (e.g., through end portion **18***f* of the earbud **30** of FIGS. **8**A-**8**B or **18***w* of FIGS. **4** & **5**).

[0156] A specific embodiment of a chipset **800** for a stereo headset, according to some embodiments of the present invention, is illustrated in FIG. **21**. This stereo chipset **800** may be integrated into an electronic module that may be attached to a printed circuit board. In another configuration, this stereo chipset **800** may be integrated into 3 modules, wherein the right and left earbud sensors comprise two separate modules, embedded in right and left earbuds respectively, and wherein the remaining circuit elements comprise the main module.

[0157] According to other embodiments of the present invention, monitoring devices with light-guiding regions may be configured to be attached to earlobes, fingers, toes, other digits, etc. For example, FIGS. **22**A-**22**B illustrate a monitoring device **70** that is configured to fit over a finger F, for example, as a finger ring, according to some embodiments of the present invention. The illustrated monitoring device **70** includes a generally circular band capable of encircling a finger F of a subject, with a cylindrical outer body portion **72** and a generally cylindrical inner body portion **74** secured together in concentric relationship. The outer body portion may be formed from virtually any type of material and may have an ornamental configuration. In some embodiments, the outer body portion **72** may include a flex circuit containing various electronic components, such as a microprocessor, D/A converter, power source, power regulator, and the like. However, in some embodiments, the outer body portion **72** may not be required and the circular band of the monitoring device **70** includes only the inner body portion **74** secured to the base **50** (described below).

[0158] A base **50** is secured to the inner and outer body portions **74**, **72** of the illustrated embodiment and may be similar to the base **50** described above with respect to FIGS. **3**, **4**A-**4**D, **5**, **6**, **7**A-**7**B, **8**A-**8**D, **9**A-**9**B, and **11**A-**11**B. The base **50** provides support for one or more sensors. In the illustrated embodiment, the base **50** supports an optical emitter **24**, an optical detector **26**, and an optical noise detector **26'**.

[0159] The inner body portion **74** includes light transmissive material similar to that of the cover **18** described above with respect to FIGS. **3**, **4**A-**4**D, **5**, **6**, **7**A-**7**B, **8**A-**8**D, **9**A-**9**B, and **11**A-**11**B. In some embodiments, the inner body portion **74** is formed from a soft, resilient material, such as silicone, which deforms when a finger of a subject is inserted therethrough. However, various types of light transmissive materials may be utilized, without limitation.

[0160] A layer of cladding material **21** is applied to (or near) the outer surface **74***a* of the inner body portion **74** and a layer of cladding material **21** is applied to (or near) the inner surface **74***b* of the inner body portion **74**, as illustrated, to define a light-guiding region **19**. As such, the inner body portion **74** serves as a light guide that delivers light from the optical emitter **24** to the finger F of a subject at one or more predetermined locations and that collects light from the finger F and delivers the collected light to the optical detectors **26**, **26'**. In some embodiments, the cladding material **21** may be embedded within the inner body portion **74** adjacent to the outer surface **74***a* and inner surface **74***b*. In some embodiments, the outer body portion **72** may serve as a cladding layer adjacent to the inner body portion outer surface **74***a*.

[0161] In the illustrated embodiment, windows **74***w* are formed in the cladding material **21** and serve as light-guiding interfaces to the finger F. There may be any number of these windows, as may be required for sufficient optical coupling, and the windows **74***w* may include lenses such as those described above (e.g., lens **18**L illustrated in FIG. **6**), to focus light emitted by the optical emitter **24** onto one or more portions of a finger F and/or to focus collected light on the light detectors **26**, **26'**. Similarly, the windows **74***w* may include optical filters to selectively pass one or more optical wavelengths and reflect and/or absorb other optical wavelengths.

[0162] In the illustrated embodiment, the light-guiding region **19** includes light blocking members **80** that isolate light emitter **24** and light detector **26** from each other. In some embodiments, only a single light blocking member **80** may be utilized. For example, a single light blocking member **80** may be positioned between the light emitter **24** and light detector **26**. By adding an additional blocking member **80**, as illustrated, the only light reaching the optical detector **26** may be light passing through at least one portion of the finger.

[0163] In some embodiments, multiple light emitters **24** may be utilized. For example, light emitters of different wavelengths may be utilized. In some embodiments, multiple light detectors may be utilized that are configured to measure light at different wavelengths (e.g., light detectors **26** and **26'** may be configured to measure light at different wavelengths). In this way, either optical detector may be configured to measure light mostly due to motion (such as finger motion) or to measure light mostly due to physiological processes and motion. For example, if the windows **74***w* incorporate IR-pass filters, visible light will not pass through the windows **74***w* and the light will be scattered to the photodetectors **26** and **26'**. Or, if the two illustrated blocking regions **80** are in place, and if photodetector **26'** is configured to measure only visible light and photodetector **26** is configured to measure only IR light, then only the photodetector **26'** will detect scattered visible light. As this visible scattered light cannot reach the finger, the scatter intensity measured by optical detector **26'** may be indicative of motion and not physiological activity.

[0164] Referring now to FIG. **23**, a monitoring device **70'**, according to some embodiments of the present invention, may be configured to be attached to a body of a subject as a bandage or "band-aid". The illustrated monitoring device **70'** includes an outer layer or body portion **72** and an inner layer or body portion **74** secured together, as illustrated. The outer body portion may be formed from virtually any type of material and may have an ornamental configuration. In some embodiments, the outer body portion **72** may include a flex circuit containing various electronic components, such as a microprocessor, D/A converter, power source, power regulator, and the like. However, in some embodiments, the outer body portion **72** may not be required and the monitoring device **70'** includes only the inner body portion **74** secured to the base **50** (described below).

[0165] A base **50** is secured to the inner and outer body portions **74**, **72** and may be similar to the base **50** described above with respect to FIGS. **3**, **4**A-**4**D, **5**, **6**, **7**A-**7**B, **8**A-**8**D, **9**A-**9**B, and **11**A-**11**B. The base **50** provides support for one or more sensors. In the illustrated embodiment, the base **50** supports an optical emitter **24**, an optical detector **26**, and an optical noise detector **26'**.

[0166] The inner body portion **74** is formed of light transmissive material similar to that of the cover **18** described above with respect to FIGS. **3**, **4**A-**4**D, **5**, **6**, **7**A-**7**B, **8**A-**8**D, **9**A-**9**B, and **11**A-**11**B. In some embodiments, the inner body portion **74** is formed from a soft, resilient material, such as silicone, which deforms when the device is attached to the body of a subject. However, various types of light transmissive materials may be utilized, without limitation.

[0167] A layer of cladding material **21** is applied to (or near) the outer surface **74***a* of the inner body portion **74** and a layer of cladding material **21** is applied to (or near) the inner surface **74***b* of the inner body portion **74**, as illustrated, to define a light-guiding region **19**. As such, the inner body portion **74** serves as a light guide that delivers light from the optical emitter **24** to the body of a subject at one or more predetermined locations and that collects light from the body and delivers the collected light to the optical detectors **26**, **26'**. In some embodiments, the cladding material **21** may be embedded within the inner body portion **74** adjacent to the outer surface **74***a* and inner surface **74***b*. In some embodiments, the outer body portion **72** may serve as a cladding layer adjacent to the inner body portion outer surface **74***a*.

[0168] In the illustrated embodiment, windows **74***w* are formed in the cladding material **21** and serve as light-guiding interfaces to the body of a subject. There may be any number of these windows, as may be required for sufficient optical coupling, and the windows **74***w* may include lenses such as those described above (e.g., lens **18**L illustrated in FIG. **6**), to focus light emitted by the optical emitter **24** onto one or more portions of the body of a subject and/or to focus collected light on the light detectors **26**, **26'**. Similarly, the windows **74***w* may include optical filters to selectively pass one or more optical wavelengths and reflect and/or absorb other optical wavelengths.

[0169] In the illustrated embodiment, the light-guiding region **19** includes a light blocking member **80** that isolates light emitter **24** and light detector **26** from each other. In some embodiments, multiple light emitters **24** may be utilized. For example, light emitters of different wavelengths may be utilized. In some embodiments, multiple light detectors may be utilized that are configured to measure light at different wavelengths (e.g., light detectors **26** and **26'** may be configured to measure light at different wavelengths).

[0170] The illustrated monitoring device **70'** may be removably attached to the body of a subject via adhesive on one or more portions of the device **70'**. In some embodiments, adhesive may be on the inner body portion **74**. In embodiments where the outer body portion is utilized, the adhesive may be on the outer body portion **74**. In some embodiments, the illustrated device **70'** may be removably attached to the body of a subject via tape or other known devices.

[0171] The foregoing is illustrative of the present invention and is not to be construed as limiting thereof. Although a few exemplary embodiments of this invention have been described, those skilled in the art will readily appreciate that many modifications are possible in the exemplary embodiments without materially departing from the teachings and advantages of this invention. Accordingly, all such modifications are intended to be included within the scope of this invention as defined in the claims. The invention is defined by the following claims, with equivalents of the claims to be included therein.

That which is claimed is:

1. A headset, comprising:

a base comprising a speaker, an optical emitter, and an optical detector;

an earbud housing extending outwardly from the base that is configured to be positioned within an ear of a subject, wherein the earbud housing is in acoustical communication with the speaker and comprises at least one aperture through which sound from the speaker can pass; and

a cover surrounding the earbud housing, wherein the cover includes at least one aperture through which sound from the speaker can pass, and wherein the cover comprises light transmissive material in optical communication with the optical emitter and detector, wherein the light transmissive material is configured to deliver light from the optical emitter into an ear region of the subject at one or more predetermined locations and to collect light external to the earbud housing and deliver the collected light to the optical detector.

2. The headset of claim **1**, further comprising a housing secured to and overlying the base that is configured to enclose and protect the speaker, optical emitter and optical detector.

3. The headset of claim **1**, wherein the cover comprises a soft material which deforms when inserted within an ear canal.

4. The headset of claim **1**, wherein the cover comprises silicone.

5. The headset of claim **1**, wherein the cover comprises an alignment member that facilitates alignment of the earbud housing within an ear canal of a subject.

6. The headset of claim **1**, wherein the cover comprises a lens region in optical communication with the optical emitter that focuses light emitted by the optical emitter and/or that collects light reflected from the ear region.

7. The headset of claim **1**, wherein the cover comprises a light diffusion region in optical communication with the light transmissive material that diffuses light emitted by the optical detector.

8. The headset of claim **1**, wherein the cover comprises at least one luminescence region in optical communication with the light transmissive material, wherein the luminescence region receives light emitted by the optical emitter and converts at least a portion of the received light to light having a different wavelength from the received light.

9. The headset of claim **1**, wherein the cover has an outer surface and an inner surface, and further comprising a luminescent material on at least a portion of one or both of the inner and outer surfaces that is in optical communication with the light transmissive material, wherein the luminescent material receives light emitted by the optical emitter and converts at least a portion of the received light to light having at least one different wavelength from the received light.

10. The headset of claim **9**, wherein the luminescent material comprises phosphor.

11. The headset of claim **9**, wherein the luminescent material comprises polymeric material.

12. The headset of claim **1**, wherein the cover comprises one or more grooves formed therein, wherein each groove directs external light to the optical detector.

13. The headset of claim **1**, wherein the light transmissive material is configured to direct light from the optical emitter to a plurality of locations at an outer surface of the cover for delivery into an ear canal of a subject.

14. The headset of claim **1**, wherein the light transmissive material comprises translucent material.

15. The headset of claim **1**, wherein the cover has an outer surface and an inner surface, and further comprising a light reflective material on at least a portion of one or both of the inner and outer surfaces.

16. The headset of claim **1**, wherein the base comprises at least one environmental sensor configured to detect and/or measure environmental conditions in a vicinity of the headset.

17. The headset of claim **1**, wherein the base comprises a signal processor configured to receive and process signals produced by the optical detector.

18. The headset of claim **16**, wherein the base comprises a signal processor configured to receive and process signals produced by the environmental sensor.

19. The headset of claim **17**, wherein the base comprises a transmitter configured to transmit signals processed by the signal processor to a remote device.

20. An earbud for a headset, comprising light transmissive material in optical communication with an optical emitter and optical detector associated with the headset and configured to deliver light from the optical emitter into an ear region of a subject at one or more predetermined locations and to collect light external to the earbud housing and deliver the collected light to the optical detector.

21. The earbud of claim **20**, further comprising at least one lens region in optical communication with the light transmissive material, wherein the lens region is configured to focus delivered light and collected light.

22. The earbud of claim **20**, further comprising a flexible circuit in optical communication with the light transmissive material.

23. The earbud of claim **20**, further comprising a flexible optical emitter in optical communication with the light transmissive material.

24. The earbud of claim **20**, further comprising at least one noise source, wherein the at least one noise source includes at least one optical sensor, inertial sensor, electrically conductive sensor, capacitive sensor, and/or inductive sensor.

25. The earbud of claim **20**, further comprising at least one optical emitter and at least one optical detector.

26. The earbud of claim **20**, further comprising at least one sensor module that includes one or more sensors for sensing physiological information and noise information.

27. The earbud of claim **26**, further comprising a microprocessor, and wherein the sensor module is in electrical communication with the microprocessor.

28. The earbud of claim **27**, wherein the microprocessor is configured to execute an adaptive filter algorithm to remove noise from at least one signal generated by the sensor module.

29. The earbud of claim **27**, wherein the microprocessor is configured to process information from the one or more sensors to generate a digital output string, wherein the digital output string includes a plurality of physiological and motion-related information.

30. The earbud of claim **20**, wherein the light guide comprises an optical scatter region, wherein the optical scatter region comprises impurities and/or morphological differences within the material of the light guide.

31. The earbud of claim **20**, further comprising at least one speaker.

32. An earbud for a headset, comprising a chipset having at least one sensor element, noise source element, signal processor, input/output line, digital control, and power regulator.

33. A monitoring device, comprising:

a circular band capable of encircling a finger of a subject; and

a base comprising an optical emitter and an optical detector attached to the circular band;

wherein the circular band comprises light transmissive material in optical communication with the optical emitter and optical detector that is configured to deliver light from the optical emitter to one or more portions of the finger of the subject and to collect light from one or more portions of the finger of the subject and deliver the collected light to the optical detector.

34. The device of claim **33**, wherein the circular band comprises first and second concentric body portions.

35. The device of claim **33**, wherein the circular band comprises a lens region in optical communication with the optical emitter that focuses light emitted by the optical emitter and/or that collects light reflected from a finger.

36. The device of claim **33**, wherein the circular band comprises a phosphor-containing region in optical communication with the light transmissive material, wherein the phosphor-containing region receives light emitted by the optical emitter and converts at least a portion of the received light to light having a different wavelength from the received light.

37. The device of claim **33**, wherein the circular band has an outer surface and an inner surface, and further comprising a light reflective material on at least a portion of one or both of the inner and outer surfaces.

38. The device of claim **33**, wherein the base comprises a signal processor configured to receive and process signals produced by the optical detector.

39. The device of claim **33**, wherein the base comprises a transmitter configured to transmit signals processed by the signal processor to a remote device.

40. A monitoring device configured to be attached to the body of a subject, comprising:

a base comprising an optical emitter and an optical detector; and

light transmissive material attached to the base, wherein the light transmissive material is in optical communication with the optical emitter and optical detector, and configured to deliver light from the optical emitter to one or more portions of the body of the subject and to collect light from one or more portions of the body of the subject and deliver the collected light to the optical detector, and wherein at least one portion of the monitoring device comprises adhesive in one or more locations that is configured to adhesively secure the device to the body of the subject.

41. The device of claim **40**, further comprising an outer body portion attached to the base and to the light transmissive material, wherein the outer body portion comprises adhesive in one or more locations that is configured to adhesively secure the device to the body of the subject.

42. The device of claim **40**, wherein the light transmissive material comprises a lens region in optical communication with the optical emitter that focuses light emitted by the optical emitter and/or that collects light reflected from a finger.

43. The device of claim **40**, wherein the light transmissive material comprises a phosphor-containing region that receives light emitted by the optical emitter and converts at least a portion of the received light to light having at least one different wavelength from the received light.

44. The device of claim **40**, wherein the light transmissive material has an outer surface and an inner surface, and further comprising a light reflective material on at least a portion of one or both of the inner and outer surfaces.

45. The device of claim **40**, wherein the base comprises a signal processor configured to receive and process signals produced by the optical detector.

46. The device of claim **40**, wherein the base comprises a transmitter configured to transmit signals processed by the signal processor to a remote device.

* * * * *