UNITED STATES PATENT AND TRADEMARK OFFICE

BEFORE THE PATENT TRIAL AND APPEAL BOARD

SAMSUNG ELECTRONICS CO., LTD.,
SAMSUNG ELECTRONICS AMERICA, INC.,
FOSSIL GROUP, INC.,
FOSSIL STORES I, INC.,
FOSSIL PARTNERS, L.P.,
OURA HEALTH OY, AND
ONEPLUS TECHNOLOGY (SHENZHEN) CO., LTD.

Petitioners,

v.

OMNI MEDSCI, INC.,

Patent Owner.

Case IPR2025-01254
Patent No. 12,268,475

PETITION FOR *INTER PARTES* REVIEW

TABLE OF CONTENTS

Page

I. INTRODUCTION 1
II. MANDATORY NOTICES UNDER 37 C.F.R. §42.8 3
A. Real Party-in-Interest 3
B. Related Matters 3
C. Lead and Back-Up Counsel 5
III. PAYMENT OF FEES 6
IV. REQUIREMENTS FOR *INTER PARTES* REVIEW 7
A. Grounds for Standing 7
B. Identification of Challenge 7
1. The Specific Art on Which the Challenge Is Based 7
2. Statutory Grounds on Which the Challenge Is Based 8
V. ’475 PATENT AND PROSECUTION HISTORY 8
A. ’475 8
B. Prosecution History 10
VI. §325(d) AND §314(a) DISCRETION DOES NOT APPLY 12
A. §325(d) 12
B. §314(a) 14
VII. LEVEL OF ORDINARY SKILL IN THE ART 16
VIII. CLAIM CONSTRUCTION 17
A. “modulating”/“modulation” limitations ([13]) 18
B. Additional Terms Discussed in ’484 and ’533 IPRs and District Courts 18
IX. GROUNDS OF UNPATENTABILITY 19
A. Collateral Estoppel Applies to Most of the Challenged Claims 19
B. Ground 1: Lisogurski in combination with knowledge of a POSITA (Claims 1, 8, 11) 21
1. Overview of Lisogurski 21

2. Motivation to Modify Lisogurski 26
3. Claim Limitations 29
C. Ground 2: Lisogurski in view of Tran (Claims 5, 7) 59
1. Overview of Tran 59
2. Motivation to Combine Lisogurski and Tran 60
3. Claim limitations 64
D. Grounds 3-4: Lisogurski in view of LeBoeuf (Claims 6-7) 66
1. Overview of LeBoeuf 66
2. Motivation to Combine Lisogurski and LeBoeuf 68
3. Claim Limitations 70
E. Grounds 5-8: Grounds 1-4 in further view of Carlson (claims 1, 5-8, 11-13) 72
1. Overview of Carlson 72
2. Motivation to Combine 73
3. Claim limitations 75
X. SECONDARY CONSIDERATIONS 76
XI. CONCLUSION 77

EXHIBIT LIST

Exhibit No.	DESCRIPTION
1001	U.S. Patent No. 12,268,475 ("'475")
1002	File History of U.S. Application No. 18/927,698 ("'475FH")
1003	Declaration of Brian Anthony in Support of Petition for Inter Partes Review of U.S. Patent No. 12,268,475 ("Anthony")
1004	Declaration of Brian Anthony in Support of Petition for Inter Partes Review of U.S. Patent No. 9,651,533 submitted in IPR2019-00916, Ex. 1003 ("'533-Anthony")
1005	*Apple Inc. v. Omni Medsci, Inc.*, No. IPR2019-00916, Paper 1 (P.T.A.B. Apr. 10, 2019) ("'533-Pet.")
1006	*Apple Inc. v. Omni Medsci, Inc.*, No. IPR2019-00916, Paper 23 (P.T.A.B. Jan. 31, 2020) ("'533-POR")
1007	*Apple Inc. v. Omni Medsci, Inc.*, No. IPR2019-00916, Paper 16 (P.T.A.B. Oct. 18, 2019) ("'533-Inst.")
1008	*Apple Inc. v. Omni Medsci, Inc.*, No. IPR2019-00916, Paper 39 (P.T.A.B. Oct. 14, 2020) ("'533-FWD")
1009	*Omni MedSci, Inc. v. Apple Inc.*, No. 21-01229, ECF 69 (Fed. Cir. June 8, 2022)
1010	Declaration of Brian Anthony in Support of Petition for Inter Partes Review of U.S. Patent No. 10,517,484 submitted in IPR2021-00453, Ex. 1003 ("'484-Anthony")
1011	*Apple Inc. v. Omni Medsci, Inc.*, No. IPR2021-00453, Paper 1 (P.T.A.B. Jan. 22, 2021) ("'484-Pet.")
1012	*Apple Inc. v. Omni Medsci, Inc.*, No. IPR2021-00453, Paper 10 (P.T.A.B. Nov. 12, 2021) ("'484-POR")
1013	*Apple Inc. v. Omni Medsci, Inc.*, No. IPR2021-00453, Paper 7 (P.T.A.B. Aug. 6, 2021) ("'484-Inst.")
1014	*Apple Inc. v. Omni Medsci, Inc.*, No. IPR2021-00453, Paper 11 (P.T.A.B. Feb. 4, 2022) ("'484-Pet.-Reply")
1015	*Apple Inc. v. Omni Medsci, Inc.*, No. IPR2021-00453, Paper 22 (P.T.A.B. Aug. 3, 2022) ("'484-FWD")
1016	*Apple Inc. v. Omni Medsci, Inc.*, No. IPR2021-00453, Paper 26 (P.T.A.B. Feb. 14, 2025) ("'484-RFWD")

Exhibit No.	DESCRIPTION
1017	*Apple Inc. v. Omni MedSci, Inc.*, No. 2023-1034, No. 23-01034, ECF 44 (Fed. Cir. June 21, 2024)
1018	*Omni MedSci, Inc. v. Apple Inc.*, 2:18-cv-00134-RWS, Dkt. No. 211 (E.D. Tex. June 24, 2019)
1019	*Omni MedSci, Inc. v. Apple Inc.*, 2:18-cv-00429-RWS, Dkt. No. 152 (E.D. Tex. Aug. 14, 2019)
1020	Second Amended Docket Control Order, June 16, 2025. *Omni MedSci, Inc. v. Samsung Electronics Co., Ltd. et al.*, No. 2:24-cv-01070-JRG-RSP (E.D. Tex.)
1021	Reserved
1022	Plaintiff's Disclosure of Asserted Claims & Infringement Contentions, May 9, 2025. *Omni MedSci, Inc. v. Samsung Electronics Co., Ltd. et al.*, No. 2:25-CV-00483-JRG-RSP (E.D. Tex.)
1023	Defendants' Supplemental Invalidity and Subject Matter Eligibility Contentions, July 18, 2025. *Omni MedSci, Inc. v. Samsung Electronics Co., Ltd. et al.*, No. 2:24-cv-01070-JRG-RSP (E.D. Tex.)
1024	Reserved
1025	U.S. Patent No. 9,241,676 ("Lisogurski")
1026	U.S. Patent Pub. No. 2010/0217102 ("LeBoeuf")
1027	U.S. Patent No. 8,108,036 ("Tran")
1028	U.S. Patent Pub. No. 2005/0049468A1 ("Carlson")
1029-1030	Reserved
1031	U.S. Patent No. 8,050,730 ("Zhang")
1032	Reserved
1033	U.S. Patent Pub. No. 2011/0237911 ("Lamego")

Exhibit No.	DESCRIPTION
1034	U.S. Patent No. 5,942,749 ("Takeuchi")
1035	U.S. Patent No. 5,822,473 ("Magel")
1036	US Patent 5,592,124 ("Mullins")
1037	E.F. Schubert, Light-Emitting Diodes (Cambridge Univ. Press, 2nd ed. reprinted 2014)
1038	"The Biomedical Engineering Handbook," by Joseph D. Bronzino (1995)
1039	U.S. Patent No. 8,079,735 ("Vakil")
1040-1043	Reserved
1044	U.S. Patent No. 5,511,553 ("Segalowitz")
1045	U.S. Patent No. 6,801,799 ("Mendelson")
1046-1047	Reserved
1048	U.S. Pat. No. 9,239,951 ("Hoffberg")
1049	U.S. Pat. Pub. 2007/0194939 ("Alvarez")
1050-1051	Reserved
1052	U.S. Patent No. 8,996,088 ("Dasco")
1053	U.S. Patent Pub. No. 2007/0149868 ("Blank")
1054	U.S. Patent No. 8,852,103 ("Rothberg")
1055-1056	Reserved
1057	U.S. Patent No. 8,922,788 ("Addison")
1058	JP3552090 ("Denso") (Certified English Translation)
1059	JP3552090 ("Denso")

Exhibit No.	DESCRIPTION
1060-1063	Reserved
1064	U.S. Patent No. 5,554,273 (“Demmin”)
1065	U.S. Patent No. 5,953,713 (“Behbehani”)
1066-1080	Reserved
1081	U.S. Patent No. 9,651,533 (“’533”)
1082	U.S. Patent No. 10,517,484 (“’484”)
1083	Declaration of Brian Anthony in Support of Petition for Inter Partes Review of U.S. Patent No. 9,861,286 submitted in IPR2019-00914, Ex. 1003
1084	Declaration of Jonathan Bradford

TABLE OF ABBREVIATIONS

Abbreviation	DESCRIPTION
Claims / Challenged Claims	Claims 1, 5-8, 11-13 of the ’475
IPR	*Inter Partes* Review
Petitioners	Petitioners Samsung Electronics Co. Ltd., Samsung Electronics America Inc., Fossil Group, Inc., Fossil Stores I, Inc., Fossil Partners, L.P., Oura Health Oy, and OnePlus Technology (Shenzhen) Co., Ltd.
PO	Patent Owner
POSITA	Person of Ordinary Skill in the Art
Board	Patent Trial and Appeal Board
EDTX	Eastern District of Texas
Texas Case	*Omni MedSci, Inc. v. Samsung Electronics Co., Ltd. et al.*, No. 2:24-cv-01070-JRG-RSP (E.D. Tex.)
’533-IPR	*Apple Inc. v. Omni Medsci, Inc.*, No. IPR2019-00916 (P.T.A.B.)
’484-IPR	*Apple Inc. v. Omni Medsci, Inc.*, No. IPR2021-00453 (P.T.A.B.)
Related EDTX Cases	*Omni MedSci, Inc. v. Apple Inc.*, 2:18-cv-00134-RWS (E.D. Tex.) *Omni MedSci, Inc. v. Apple Inc.*, 2:18-cv-00429-RWS (E.D. Tex.)

LIST OF CHALLENGED CLAIMS

[1.pre] An apparatus adapted to be worn by a user comprising:

[1.a] one or more biosensors adapted to be placed on the user,

[1.b] wherein one or more physiological parameters are measured,

[1.c] wherein measuring of the one or more physiological parameters comprises a differential measurement, and wherein the one or more physiological parameters comprises a pulse rate monitoring and a blood flow measurement;

[1.d] a light source comprising a plurality of light emitting diodes that are configured to generate an output optical light having one or more optical wavelengths;

[1.e] one or more lenses configured to receive at least a portion of the output optical light and to deliver a lens output light to tissue comprising skin;

[1.f] a detection system configured to receive at least a portion of the lens output light reflected from the tissue and to generate an output signal having a signal-to-noise ratio,

[1.g] wherein the detection system is configured to be synchronized to the light source,

[1.h] wherein the detection system comprises a plurality of detectors that are spatially separated from each other, and wherein at least one analog to digital converter is coupled to at least one of the plurality of detectors;

[1.i] wherein the output signal is indicative of the one or more physiological parameters;

[1.j] the apparatus being configured to increase the signal-to-noise ratio by increasing light intensity of at least one of the plurality of light emitting diodes from an initial light intensity; and

[1.k] the detection system further configured to: generate a first signal responsive to light received while the light emitting diodes are off,

[1.l] generate a second signal responsive to light received while at least one of the light emitting diodes is on, and

[1.m] increase the signal-to-noise ratio by comparing the first signal and the second signal; and

[1.n] wherein the apparatus is at least in part configured to determine, based at least in part on the output signal, that the apparatus is being worn by the user.

[5] The apparatus of claim 1, wherein the apparatus further comprises a processor configured to be coupled to a non-transitory computer readable medium, and wherein the apparatus including the processor is configured to use artificial intelligence in making decisions associated with at least a portion of the output signal.

[6] The apparatus of claim 1, wherein the plurality of light emitting diodes

comprises six light emitting diodes, and wherein the detection system comprises the plurality of detectors arranged along an arc.

[7] The apparatus of claim 6, wherein the apparatus is further configured to communicate with a smart phone or a tablet, the smart phone or the tablet comprising a wireless receiver, a wireless transmitter, a display, a speaker, a voice input module, one or more buttons or knobs, a microprocessor, and a touch screen.

[8.pre] A wearable device configured to be worn by a user, the wearable device comprising:

[8.a] a light source configured to be on or off, responsive to the light source being on, the light source generates an output light;

[8.b] a lens positioned to direct at least a portion of the output light towards a bodily tissue of the user;

[8.c] a detector; and

[8.d] a processor configured to: (i) responsive to the light source being on and the detector receiving at least a portion of the output light that is reflected from the bodily tissue of the user, generate a first output signal having a first signal-to-noise ratio; and

[8.e] (ii) responsive to the light source being off and the detector receiving ambient light, generate a second output signal having a second signal-to-noise ratio;

[8.f] (iii) generate a third output signal using at least a portion of the first output signal and at least a portion of the second output signal, the third output signal having a third signal-to-noise ratio that is greater than the first signal-to-noise ratio and greater than the second signal-to-noise ratio, the third output signal being associated with a physiological parameter of the user; and

[8.g] (iv) determine, based at least in part on the third output signal, that the wearable device is being worn by the user.

[11] The wearable device of claim 8, wherein at least a portion of the output light has an optical wavelength between about 700 nanometers and about 2500 nanometers.

[12] The wearable device of claim 8, wherein the physiological parameter of the user is associated with a blood constituent or a blood flow of the user.

[13] The wearable device of claim 8, wherein the processor is further configured to modulate the light source with a modulation frequency.

Pursuant to §§311-319 and §42.1,[1] Samsung Electronics Co. Ltd., Samsung Electronics America Inc., Fossil Group, Inc., Fossil Stores I, Inc., Fossil Partners, L.P., Oura Health Oy, and OnePlus Technology (Shenzhen) Co., Ltd. ("Petitioners") respectfully petition for *inter partes* review of claims 1, 5-8, 11-13 ("Challenged Claims" or "Claims") of U.S. Patent No. 12,268,475 (Ex.1001, "'475"). There is a reasonable likelihood—and it is highly likely—that at least one Challenged Claim is unpatentable as explained herein. Petitioners request review of the Claims and judgment finding them unpatentable under §103.

I. INTRODUCTION

The Board already found claim limitations identical and/or substantially identical to those in the '475 unpatentable in IPR2019-00916 ('533-IPR) and IPR2021-00453 ('484-IPR). *See generally* §§IX.B-E; Anthony, ¶¶9-12, 42-43, 68-336. Estoppel thus precludes Patent Owner Omni MedSci, Inc. ("PO" or "Omni") from relitigating unpatentability of those identical or substantially identical limitations in the '475. *See Samsung Elecs. Co., Ltd. v. Netlist, Inc.*,

[1] Section cites are to 35 U.S.C. (pre-AIA) or 37 C.F.R. as context indicates. All emphasis/annotations added unless noted. Figure annotations herein generally quote the Claims for reference. Citations herein are exemplary and not meant to be limiting.

IPR2025-00002, Paper 17 at 17-24 (PTAB May 15, 2025) ("Patent Owner is collaterally estopped" as to obviousness of all challenged claims, based on FWDs relying on the same ground to find "substantially similar" limitations in related patents obvious).

Similar to the claims at issue in the '533- and '484-IPRs, the '475 is generally directed to a physiological measurement system comprising a wearable **measurement device** with light sources and detectors to generate an output signal with physiological parameters to be transmitted to a **smart phone/tablet** which communicates processed data to **cloud based server** for additional processing, and common techniques to improve signal-to-noise ratio of such signals. '475, 20:59-21:13, 35:32-37:4, 58:1-22, 70:8-27, 79:7-13. Anthony, ¶¶40-43.

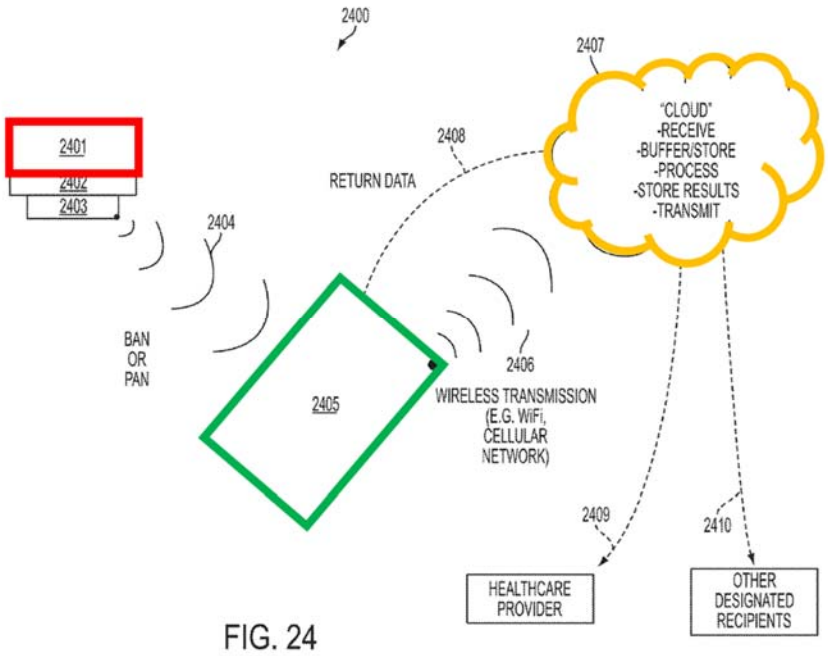

FIG. 24

’475, FIG. 24. Anthony, ¶44.

Additional limitations in the ’475 Claims at most recite a wearable device’s common locations, measurements, configurations and components, along with methods for using such a device. *See generally* §§IX.B-E. All such additional limitations were well-known in the art. *See generally* §§IX.B-E. Anthony, ¶¶40-43.

Accordingly, Petitioners request that the Board institute trial and find the Claims unpatentable.

II. MANDATORY NOTICES UNDER 37 C.F.R. §42.8

A. Real Party-in-Interest

Petitioners Samsung Electronics Co. Ltd., Samsung Electronics America, Inc., Fossil Group, Inc., Fossil Stores I, Inc., Fossil Partners, L.P., Oura Health Oy, and OnePlus Technology (Shenzhen) Co., Ltd., in addition to Ouraring, Inc. and Guangdong OPPO Mobile Telecommunications Corp., Ltd., are the real parties-in-interest. No other party had access to or control over the present Petition, and no other party funded or participated in preparation of the present Petition.

B. Related Matters

The ’475 is the subject of the following co-pending civil actions:

- *Omni Medsci, Inc. v. Samsung Electronics. Co., Ltd. et al.*, 2:24-cv-01070-JRG-RSP (E.D. Tex) (“Texas Case”); and
- *Omni MedSci, Inc. v. Whoop, Inc.*, 1:25-cv-00140-JLH (D. Del.).

The ’484, which is related to the ’475, is also subject to the following appeal: *Omni Medsci, Inc. v. Apple, Inc.*, No. 25-1646 (Fed. Cir.).

Petitioners are concurrently filing a petition for PGR of the ’475, PGR2025-00063 (“’475-PGR”). *See* Petitioners’ Ranking and Explanation of Parallel Petitions accompanying this Petition.

Petitioners are also concurrently filing petitions for IPR of the related U.S. Patent Nos. 9,651,533 (IPR2025-01250), 10,874,304 (IPR2025-01251), 11,160,455 (IPR2025-01252), and 12,193,790 (IPR2025-01253), and a petition for PGR of the related U.S. Patent No. 12,193,790 (PGR2025-00064). Petitioners are further concurrently filing a petition for IPR of U.S. Patent No. 9,055,868 (IPR2025-01249) asserted in the Texas Case.

C. Lead and Back-Up Counsel

Lead Counsel	Backup Counsel
James L. Davis, Jr. Reg. No. 57,325 **ROPES & GRAY LLP** 525 University Avenue, 8th Floor Palo Alto, CA 94301 Phone: +1-650-617-4000 Fax: +1-617-235-9492 james.l.davis@ropesgray.com Samsung-Omni-Ropes-IPR-Service@ropesgray.com **Mailing address for all PTAB correspondence:** ROPES & GRAY LLP IPRM—Floor 43 Prudential Tower 800 Boylston Street Boston, Massachusetts 02199-3600	Hyun-Joong Kim Reg. No. 79,936 **ROPES & GRAY LLP** 1211 Avenue of the Americas New York, NY 10036 Phone: +1 212-596-9000 Fax: +1-617-235-9492 Daniel.Kim@ropesgray.com Frances Zhang Reg. No. 73,589 **ROPES & GRAY LLP** 2099 Pennsylvania Avenue, N.W. Washington, DC 20006-6807 Phone: +1-202-508-4600 Fax: +1-617-235-9492 frances.zhang@ropesgray.com
	Jasjit S. Vidwan Reg. No. 72,080 **MAYER BROWN LLP** 1999 K Street, NW Washington, DC 20006-1101 Tel.: 202.263.3065 JVidwan@mayerbrown.com Robert G. Pluta Reg. No. 50,970 **MAYER BROWN LLP** 71 S. Wacker Drive Chicago, IL 60606 Tel.: 312.701.8641 RPluta@mayerbrown.com

Lead Counsel	Backup Counsel
	Jared A. Smith Reg. No. 73,749 **FISH & RICHARDSON P.C.** 12860 El Camino Real, Suite 400 San Diego, CA 92130 Phone: +1 858-678-4702 Fax: +1 858-678-5099 jasmith@fr.com Ricardo J. Bonilla Reg. No. 65,190 **FISH & RICHARDSON P.C.** 1717 Main Street, Suite 5000 Dallas, TX 75201 Phone: +1 214-760-6150 Fax: +1 214-747-2091 rbonilla@fr.com
	Jack Shaw Reg. No. 72,262 **CHERRY JOHNSON SIEGMUND JAMES PC** 8140 Walnut Hill Lane, Suite 105 Dallas, Texas 75231 Tel: 254-732-2242 Fax: 866-627-3509 jshaw@cjsjlaw.com

Petitioners consent to electronic service of documents to the email addresses identified above.

III. PAYMENT OF FEES

The undersigned authorizes the Office to charge the fee required by §42.15(a)

and any additional fees that might be due to Deposit Account No. 18-1945, under Order No. 110797-0060-657.

IV. REQUIREMENTS FOR *INTER PARTES* REVIEW

A. Grounds for Standing

Pursuant to §42.104(a), Petitioners certify the ’475 is available for IPR. Petitioners and any real parties-in-interest are not barred or estopped from requesting IPR challenging the Claims on the grounds identified herein. While the ’475 issued less than nine months ago, PO in the Texas Case asserts that the ’475 is entitled to a priority date of 12/31/2012. Ex.1022, 8-9. Petitioners do not contest PO’s assertion of the 12/31/2012 priority date here. Therefore, under PO’s own admission, the ’475 is available for IPR under §42.102(a)(2).

B. Identification of Challenge

Pursuant to §§42.104(b) and (b)(1), Petitioners request IPR of the Claims and that the Board cancel the same as unpatentable.

1. The Specific Art on Which the Challenge Is Based

Petitioners rely upon the following art (Anthony, ¶¶68-70):

Name	Ex.	Publication	Filed	Published/ Issued	Prior art under at least
Lisogurski	1025	US 9,241,676	5/31/2012	1/26/2016	§102(e)
Tran	1027	US 8,108,036	6/18/2009	1/31/2012	§102(e)

LeBoeuf	1026	US 2010/0217102	1/21/2010	8/26/2010	§102(b)
Carlson	1028	US 2005/0049468	9/3/2003	3/3/2005	§102(b)

Each of the above references is prior art to the Claims based on 12/31/2012, the earliest provisional application priority date listed in the '475's priority claim.[2]

2. Statutory Grounds on Which the Challenge Is Based

Ground	Claim(s)	Basis	References
1	1, 6-8, 11-13	§103	**Lisogurski**
2	5, 7		**Lisogurski** in view of **Tran**
3-4	6-7		**Grounds 1-2** in further view of **LeBoeuf**
5-8	1, 5-8, 11-13		**Grounds 1-4** in further view of **Carlson**

V. '475 PATENT AND PROSECUTION HISTORY

A. '475

'475 Figure 24 shows an embodiment of the physiological measurement system:

[2] If AIA applies, these references are prior art under §102(a)(1) and/or §102(a)(2) for the same reason. Petitioners take no position as to the appropriate priority date of the '475.

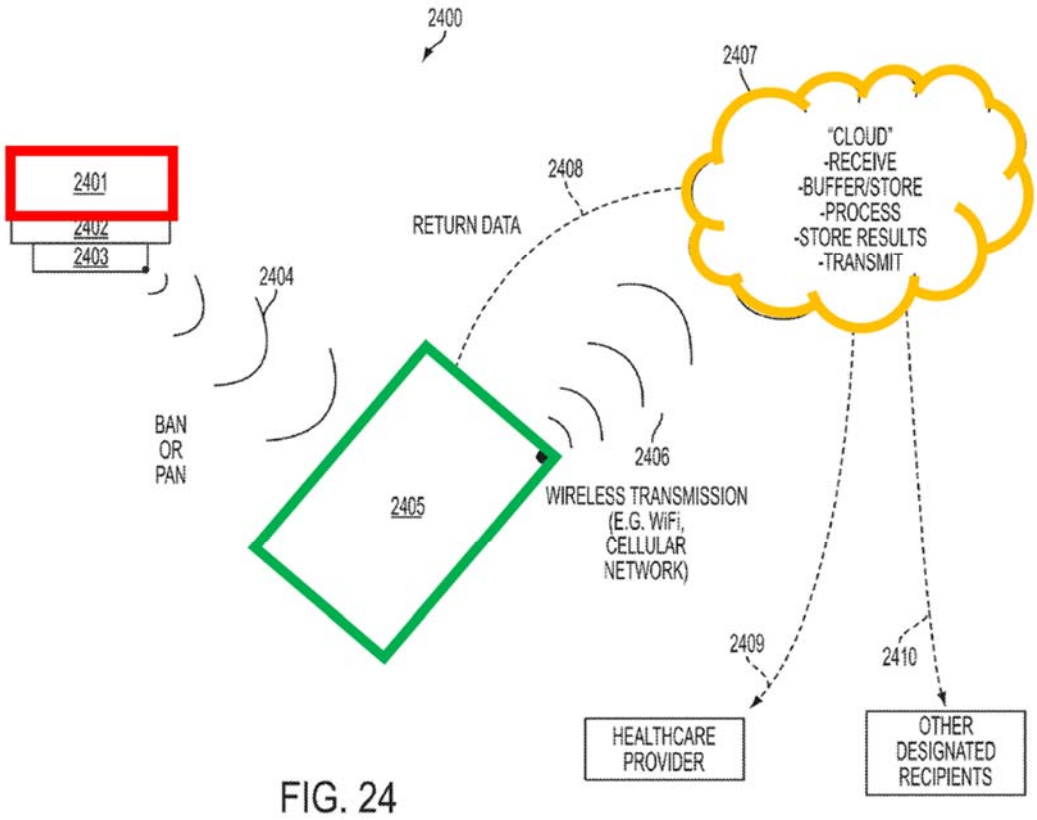

FIG. 24

'475, 35:32-37:4. **Wearable measurement device 2401** with processor 2402 and transmitter 2403 communicates measurements to **smart phone/tablet 2405**. '475, 35:32-52. An application program in **smart phone/tablet 2405** processes the measurement and communicates the processed data to **cloud based server 2407** for additional processing, e.g., pattern matching algorithms. *See* '475, 35:53-37:4. **Wearable device 2401 comprises one or more biosensors that** can be placed on a user's body to measure physiological parameters of the user by using a differential measurement, in which two measurements taken from closely spaced regions of the body are subtracted from one another. '475, 8:39-44, 23:31-48. The physiological

parameter can include a pulse rate, blood flow, and/or blood constituent. ’475, 8:45-47, 17:34-18:11. **Wearable device 2401** further includes a light source comprising of a plurality of light emitting diodes configured to generate an output optical light with a plurality of optical wavelengths. ’475, 8:47-50. The light source can be modulated. ’475, 16:25-27, 58:5-19, 70:12-24, 74:26-46. **Wearable device 2401** further comprises lenses to receive and direct light from the semiconductor sources to the user’s tissue, and a detection system that receives the light reflected from the tissue and to generate an output signal having a signal-to-noise ratio. ’475, 8:50-57. The detection system comprises spatially separated detectors which can be located on arc. ’475, 8:57-60. The ’475 patent describes several common techniques to improve signal processing to select the constituents of interest, including using increased light intensity, modulation, lock-in, and dark subtraction techniques. ’475, 20:59-21:13, 58:1-22, 70:8-27, 79:7-13. The detection system generates multiple signals that are compared to increase the signal-to-noise ratio, and, in some embodiments, the **wearable device** includes a processor to do the same. ’475, 8:64-9:3, 9:13-26. The **wearable device** can detect, based on the output signal, whether it is being worn by a user, and, in some embodiments, this functionality is performed by a processor. ’475, 9:4-5, 9:13-28. Anthony, ¶¶44-46.

B. Prosecution History

The ’475 issued from U.S. Pat. App. 18/927,698, filed 10/25/2024. Following

an Examiner interview, the Applicant filed a terminal disclaimer in view of other applications or patents in the patent family, including Application Nos. 18/899,012 18/891,970 and U.S. Patent Nos. 12,193,790, 11,896,346, 9,494,567, 9,993,159, 10,441,176, 11,564,577, 9,500,635, 9,164,032, and 9,500,634. '475FH, 1082-84, 1090. The pending claims were then allowed without a rejection. '475FH, 1195-1204. In the Notice of Allowance, the Examiner stated that the prior art does not disclose: "output…indicative of…physiological parameters," "increase the signal-to-noise ratio by increasing intensity of…light emitting diodes," "increase…signal-to-noise ratio by comparing the first signal [responsive to light when LEDs are off] and the second signal [responsive to light when LEDs are on]," "determine…that the apparatus is being worn by the user," "generate a third output signal using…[a] first output signal [having a first signal-to-noise ratio]…and [a] second output signal [having a second signal-to-noise ratio and responsive to the light source being off and the detector receiving ambient light]," "third output signal having a third signal-to-noise ratio that is greater than the first [and second] output signal[s]," "third output signal being associated with a physiological parameter," and "determine, based…on the third output signal, that the wearable device is being worn by the user." '475FH, 1195-1204. For the reasons set forth below, **Lisogurski** alone or in view of **Tran, LeBoeuf**, and/or **Carlson** discloses these limitations. *See*

§§IX.B-E. Anthony, ¶¶47-50.

VI. §325(D) AND §314(A) DISCRETION DOES NOT APPLY

A. §325(d)

Under the *Advanced Bionics* framework, there is no basis for discretionary denial under §325(d) as **the grounds raised by this Petition are not the same or substantially the same as the art and arguments raised during prosecution of the '475**. *Advanced Bionics, LLC v. MED-EL Elektromedizinische Geräte GmbH*, IPR2019-01469, Paper 6 at 8 (PTAB, Feb. 13, 2020) (precedential).

The grounds raised by this Petition are not the same or substantially same as the art and arguments raised during prosecution. *Id.* The Examiner did not consider the references relied upon in this Petition. Although **Lisogurski**, **LeBoeuf**, **Tran**, and **Carlson** were cited in an IDS during prosecution ('475FH, 1136, 1139, 1159, 1184), and while the '533-Pet., '533-Anthony-Declaration, '533-FWD, '484-Pet., and '484-Anthony-Declaration were also cited in an IDS ('475FH, 1120, 1160-1161, 1165), **Lisogurski**, **LeBoeuf**, **Tran**, or **Carlson** were never considered in combination or used as the basis for a rejection, nor were any of the aforementioned '533- and '484-IPR materials relied on as a basis for a rejection. *Sony v. MZ Audio Scis., LLC*, IPR2022-01544, Paper 12 at 7 (PTAB April 21, 2023) (§325(d) discretion is improper where "Examiner did not consider the specific combination of references asserted."). Indeed, the Examiner never issued a rejection

during the ’475 prosecution. *See* §V.B. Further, while the ’484-FWD was rendered prior to the issuance of the ’475, neither it nor the ’484-RFWD were cited in an IDS in the ’790 or any of the applications to which the ’475 claims priority before the ’475 issued.

Even if the art and arguments were substantially the same, the Examiner erred in a manner material to the patentability of the Claims. Where the “Examiner did not expressly consider” **Lisogurski**, **LeBoeuf**, **Tran**, or **Carlson**, it is difficult, if not impossible to explain “why the Examiner allowed the claims” or “how the Examiner might have considered the arguments presented in the Petition.” *Bowtech, Inc. v. MCP IP, LLC*, IPR2019-00379, Paper 14, at 20 (PTAB July 3, 2019) (not exercising §325(d) discretion). If the Examiner had considered substantially the same art or arguments, it was error to allow the Claims because, *e.g.*, the Examiner failed to reject the Claims over references or combinations of references teaching each of the limitations that the Examiner found not disclosed in the prior art (§V.B). *See* §§IX.B-E. Indeed, the Board in the ’484-IPR and ’533-IPR already found unpatentable limitations identical or substantially identical to those in the Claims based on **Lisogurski**, **Tran**, and/or **Carlson**, as applied herein (*see* §§IX.B-E (citing prior FWDs)). It was material error for the Examiner to fail to apply the same grounds during prosecution. Anthony, ¶¶47-50.

The Board should not deny institution under §325(d).

B. §314(a)

The Texas Case also does not warrant exercising discretion under §314(a).

Factor 1 weighs in favor of institution. Petitioners intend to seek a stay of the Texas Case pending the outcome of this IPR, along with other IPRs related to the litigation dispute. At the time of institution, it is highly unlikely that the Court will have conducted a *Markman* hearing, which is currently scheduled for 2/13/2026. Ex.1020, 4. The EDTX has routinely granted stays prior to claim construction, since cases have "not reached such an advanced stage that it would weigh against a stay." *Broadphone LLC v. Samsung Elecs. Co.*, No. 2:23- CV-00001-JRG-RSP, 2024 WL 3524022, at *2-3 (E.D. Tex. July 24, 2024).

While ***Factors 2 and 3*** are neutral or at most weigh slightly against institution, they deserve little weight given Petitioners' diligence in preparing and filing this Petition.

Factor 4 weighs strongly in favor of institution. Petitioners hereby stipulate that, if the PTAB institutes this proceeding, Petitioners will not pursue in the Texas Case (1) the specific grounds asserted in this proceeding or any ground that was raised or could have been raised in an IPR proceeding against the Challenged Claims; or (2) combinations of the prior art asserted in this proceeding with any other type of prior art against the Challenged Claims.

Factor 5 is neutral or weighs at most only slightly against institution. While Petitioners and PO are the same parties in the Texas Case, institution and a public trial record of the important invalidity grounds in the Petition will reduce issues for the public, including all parties besides Petitioners who currently are or may in the future be subject to litigation involving the ’475.

Factor 6 weighs strongly in favor of institution. The ’475 issued in 2025 and was not asserted prior to the Texas Case—PO has not developed settled expectations. *Berkshire Hathaway Energy Co. et al. v. MES, Inc.*, IPR2025-00274, Paper 23 at 3 (PTAB July 2, 2025); *Intel Corp. v. Proxense LLC*, IPR2025-00327, Paper 12 at 2-3 (PTAB June 26, 2025). Further, the Petition is strong and presents compelling unpatentability arguments that were overlooked during prosecution. *See* §§IX.B-E. Indeed, in prior ’533- and ’484-IPRs, the Board already rejected identical or substantially identical claims to the ’475 based on **Lisogurski**, **Tran**, and **Carlson** as applied herein. *See Posco Co., Ltd. v. Arcelormittal*, IPR2025-00370, Paper 10 at 3 (PTAB June 25, 2025) (“The fact that the Board previously determined related claims to be unpatentable…tips the balance against discretionary denial.”); *Tesla, Inc., v. Intellectual Ventures II LLC*, IPR2025-00217, Paper 9 at 2 (PTAB June 13, 2025).

Indeed, the Board is uniquely positioned to address the issue of collateral

estoppel based on the ’533- and ’484-IPRs. *ParkerVision, Inc. v. Qualcomm Inc.*, 116 F.4th 1345, 1362 (Fed. Cir. 2024) (“[A] finding underlying an unpatentability decision in an IPR proceeding [does not] collaterally estop[] a patentee from making validity arguments regarding separate, related claims in district court litigation….”); *Samsung Elecs. Co., Ltd. v. Netlist, Inc.*, IPR2025-00002, Paper 17 at 17-24 (PTAB May 15, 2025) (“Patent Owner is collaterally estopped” as to obviousness of all challenged claims, based on FWDs relying on the same ground to find “substantially similar” limitations in related patents obvious); *see also* §IX.A.

Accordingly, the Board should not exercise its discretion to deny institution.

VII. LEVEL OF ORDINARY SKILL IN THE ART

For the purposes of this Petition only, Petitioners do not contest the PO’s assertion that the Claim is entitled to the earliest claimed priority date of 12/31/2012. §IV.A.

As the Board concluded and PO did not dispute in the ’533-/’484-IPRs, on or before the claimed priority date of 12/31/2012, a POSITA “would have [had] a good working knowledge of optical sensing techniques and their applications, and familiarity with optical design and signal processing techniques.” ’533-FWD, 8-9; *see also* ’484-Inst., 7-8; ’484-FWD, 11 n.7. Such a person would have obtained such knowledge through “an undergraduate education in engineering (electrical, mechanical, biomedical, or optical) or a related field of study, along with relevant

experience studying or developing physiological monitoring devices…in industry or academia." '533-FWD, 8-9; '484-Inst., 7-8; '484-FWD, 11 n.7. Anthony, ¶¶51-54.

VIII. CLAIM CONSTRUCTION

Claim terms subject to IPR are to be construed according to the *Phillips* standard applied in district court. §42.100(b). Only terms necessary to resolve the controversy must be construed. Because the prior art asserted herein discloses embodiments within the Claims' indisputable scope, the Board need not construe the Claims' outer bounds.[3] Other than noted here, all claim terms should be construed according to their plain and ordinary meaning as they would have been understood by a POSITA. Anthony, ¶¶55-67.

In prior Board or district court proceedings involving patents related to the '475, certain terms identical to or substantially similar to language in the Claims were construed, as detailed below. Though Petitioners do not believe that those terms need to be construed here, the prior art discloses and renders obvious those

[3] In the Texas Case, Defendants identified certain limitations as potentially indefinite. Ex.1023, 247-248. Regardless of the outer bounds of these limitations, the prior art discloses or renders obvious the indisputable scope of these limitations. *See* §IX. Anthony, ¶¶66-67, 128-131, 160-162, 167-169, 193-195, 210-211, 293-295, 315-316.

terms, including under those prior constructions, as discussed in §IX, *infra*. Anthony, ¶¶55-67.

A. "modulating"/"modulation" limitations ([13])

Prior to the Board's '533-FWD, in two Eastern District of Texas cases ("Related EDTX Cases") involving related patents to the '475, including the '533, the district court construed the term "modulating at least one of the LEDs" to mean "varying the amplitude, frequency, or phase of the light produced by at least one of the LEDs to include information." *See* Ex.1018, 13-16; Ex.1019, 15-19. The Board also adopted this construction for the same term in a related patent. *E.g.*, *Apple Inc. v. Omni Medsci, Inc.*, IPR2019-00914, Paper 13 at 9-11 (Nov. 6, 2019). Anthony, ¶¶56-57.

B. Additional Terms Discussed in '484 and '533 IPRs and District Courts

In the '484-IPR, the petitioner proposed construing "optical light" and informed the Board of its proposed construction for "lens" in a parallel district court case, Omni did not propose constructions for these terms, and the Board did not construe them. '484-Pet., 20; '484-Inst., 9-10; '484-FWD, 7-8. In the '533-IPR, the petitioner proposed construing "plurality of lenses," which the Board declined to construe. '533-Pet., 19-20; '533-FWD, 9-10. The Board in '533- and '484-IPRs did not construe any other claim present in the '475. Anthony, ¶¶58-63.

Prior to the Board's '533-FWD, in two Eastern District of Texas cases involving related patents to the '475, including the '533, the district court determined that the term "lenses" should be given its "plain and ordinary meaning without the need for further construction." Ex. 1018, 10-13 (construing "plurality of lenses" in claims 5 and 13 of the '533); Ex. 1019, 12-15 (construing "lens" and "one or more lenses" in related patents). Anthony, ¶¶64-65.

Petitioners agree that these terms do not require further construction for purposes of this IPR.

IX. GROUNDS OF UNPATENTABILITY

As explained below, the Claims are unpatentable as obvious. This Petition is supported by the Declaration of Brian Anthony, which describes the prior art's scope and content at the time of the '475. Anthony, ¶¶68-336.

A. Collateral Estoppel Applies to Most of the Challenged Claims

The vast majority of the Challenged Claims were already found unpatentable in prior '533/'484-FWDs. '533-FWD; '484-FWD (FWD issued prior to appeal); '484-RFWD (FWD issued on remand).[4]

[4] *See also Apple Inc. v. Omni Medsci, Inc.*, IPR2020-00175, Paper 26 (June 14, 2021); *Omni MedSci, Inc. v. Apple Inc.*, No. 2021-2213, 2022 WL 2062167 (Fed. Cir. June 8, 2022).

It thus is an efficient use of Board resources to address similar claims in the related ’475, and collateral estoppel should apply to entire limitations [1.pre], [1.b], [1.d]-[1.m], [5], [7], [8.pre]-[8.c], and [8.f]-[8.f]. *See Embody, Inc. v. LifeNet Health*, IPR2025-00248, Paper 13 at 2-3 (PTAB June 26, 2025).

First, these limitations are “identical” or substantially identical to limitations already found unpatentable by the Board in the prior ’533 and/or ’484-IPRs against PO. *See* ’533-FWD, 25-43; ’484-FWD, 12-55.[5] *Google LLC v. Hammond Dev. Int'l*, 54 F.4th 1377, 1381-82 (Fed. Cir. 2022); *Samsung Elecs. Co., Ltd. v. Netlist, Inc.*, IPR2025-00002, Paper 17 at 17-24 (PTAB May 15, 2025) (“Patent Owner is collaterally estopped” as to obviousness of all challenged claims, based on FWDs relying on the same ground to find “substantially similar” limitations in related patents obvious). To the extent there are any differences between the aforementioned ’475 limitations and prior limitations at issue in the ’484/’533 IPRs, they are immaterial and met for the same reasons. Anthony, ¶¶68-336.

Second, these limitations were “actually litigated” in the prior ’533 and ’484-IPRs. *Google*, 54 F.4th at 1381-82; ’533-FWD, 25-43; ’533-Pet, 21-63;

[5] To meet these identical/ substantially identical limitations, the Board relied on the same embodiments of **Lisogurski** in the ’533-FWD and ’484-FWD, as does this Petition. *See* §§IX.B-E. Anthony, ¶¶10-11.

’533-POR, 13-32; ’484-FWD, 12-55; ’484-Pet, 21-66; ’484-POR, 14-42.

Third, the Board’s findings with respect to these limitations were “essential” to the Board’s FWDs, which were final judgments because they were affirmed by the Federal Circuit or not appealed. *United Therapeutics Corp. v. Liquidia Techs., Inc.*, 74 F.4th 1360, 1372 (Fed. Cir. 2023).

Fourth, PO here (Omni) was the same PO who defended against the prior ’533 and ’484-IPRs and thus had a full and fair opportunity to litigate the patentability of these limitations in the prior IPRs. *Google*, 54 F.4th at 1381-82.

PO is thus collaterally estopped from relitigating the unpatentability determinations of the aforementioned limitations in this IPR. To the extent PO is not collaterally estopped from relitigating the unpatentability of one or more of the aforementioned limitations in this IPR, the Board’s findings (as discussed below in §§IX.B-E) regarding the unpatentability of the immaterially different limitations in the ’484/’533 IPR(s) apply equally here. Anthony, ¶¶68-336.

B. Ground 1: Lisogurski in combination with knowledge of a POSITA (Claims 1, 8, 11)

1. Overview of Lisogurski

Lisogurski discloses a “physiological monitoring system [that] monitor[s] one or more physiological parameters of a patient...using one or more physiological sensors.” Lisogurski, 3:44-46, 4:3-5. Such sensors may include a pulse oximeter

with a light sensor placed on a patient's fingertip, toe, forehead, or earlobe to detect physiological parameters, including pulse rate, pulsatile flow, and parameters associated with various blood constituents, such as oxyhemoglobin. Lisogurski, 4:3-7, 4:15-20, 4:36-41. '533-FWD, 13; '484-FWD, 12-13. Anthony, ¶74.

Lisogurski further discloses measuring physiological parameters by placing "sensors at multiple locations" on the body. Lisogurski, 4:25-26, 17:51-53. **Lisogurski** also discloses the "detect[ion of] a signal indicative of a system error," such as a "probe-off signal" or a signal indicative of a "physiologically impossible value." Lisogurski, 36:66-37:2. Anthony, ¶75.

Lisogurski Figure 1 is reproduced below:

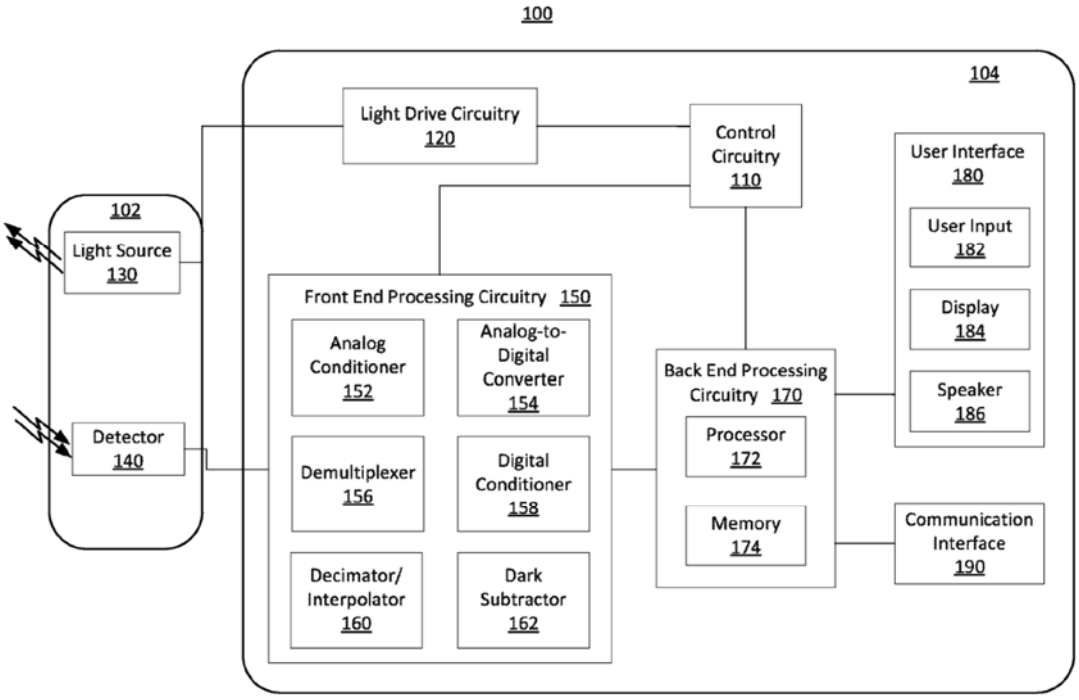

FIG. 1

Lisogurski Figure 1 is a "block diagram of an illustrative physiological monitoring system." Lisogurski, 2:11-13. The system includes sensor 102, including light source 130 and detector 140, and monitor 104 for "generating and processing physiological signals of a subject." Lisogurski, 10:44-49. Light source 130, which includes "multiple LEDs," emits one or more wavelengths of light, including red and IR light emitters (e.g., LEDs) emitting 600-700nm and 800-1000nm wavelength light, respectively. Lisogurski, 10:49-11:8, 19:27-31, 25:40-43. Light source 130 is controlled by a light drive signal "that varies with a period the same as or closely related to the period of the cardiac cycle." Lisogurski, 25:49-52, 5:34-36, 11:38-41. Spatially separated detectors 140 can be arranged in "[a]ny suitable configuration," and detect light intensity, converts them to an electrical signal, and sends the detection signal to monitor 104, where it is processed to determine physiological parameters. Lisogurski, 11:9-23, 17:40-45. '533-FWD, 15-16; '484-FWD, 15-16. Anthony, ¶¶76-77.

Monitor 104 includes user interface 180, communication interface 190, and control circuitry 110 for controlling light drive circuitry 120, front end processing circuitry 150, and back end processing circuitry 170. Lisogurski, 11:28-36. Light drive circuitry 120 generates a light drive signal for turning on/off and controlling the intensity of light source 130. Lisogurski, 11:38-54. Front end processing

circuitry 150 "receive[s] a detection signal from detector 140 and provide[s] one or more processed signals to back end processing circuitry 170," and "synchronize[s] the operation of an analog-to-digital converter and a demultiplexer with the light drive signal based on the timing control signals." Lisogurski, 11:40-46, 12:42-48. '533-FWD, 16; '484-FWD, 16. Anthony, ¶¶78-80.

Backend processing circuitry 170 includes processor 172 and memory 174, and "receive[s] and process[es] physiological signals received from front end processing circuitry 150" to "determine one or more physiological parameters." Lisogurski, 14:56-64. Backend processing circuitry 170 is "communicatively coupled [to] use[r] interface 180 and communication interface 190." Lisogurski, 15:16-18. User interface 180 includes "user input 182, display 184, and speaker 186," and may include "a keyboard, a mouse, a touch screen, buttons, switches, [and] a microphone." Lisogurski, 15:19-22. Communication interface 190 allows "monitor 104 to exchange information with external devices," and includes transmitters and receivers to allow wireless communications. Lisogurski, 15:43-57. **Lisogurski** discloses, while "the components of physiological monitoring system 100...are shown and described as separate components....the functionality of some of the components may be combined in a single component," and "the functionality of some of the components...may be divided over multiple components."

Lisogurski, 15:66-16:12. ’533-FWD, 15, 17; ’484-FWD, 15-17. Anthony, ¶¶81-84.

Lisogurski Figure 3 is “a perspective view of an embodiment of a physiological monitoring system,” including sensor 312, monitor 314, and multi-parameter physiological monitor (“MPPM”) 326. Lisogurski, 2:23-25, 17:35-36, 18:44-45. Anthony, ¶85.

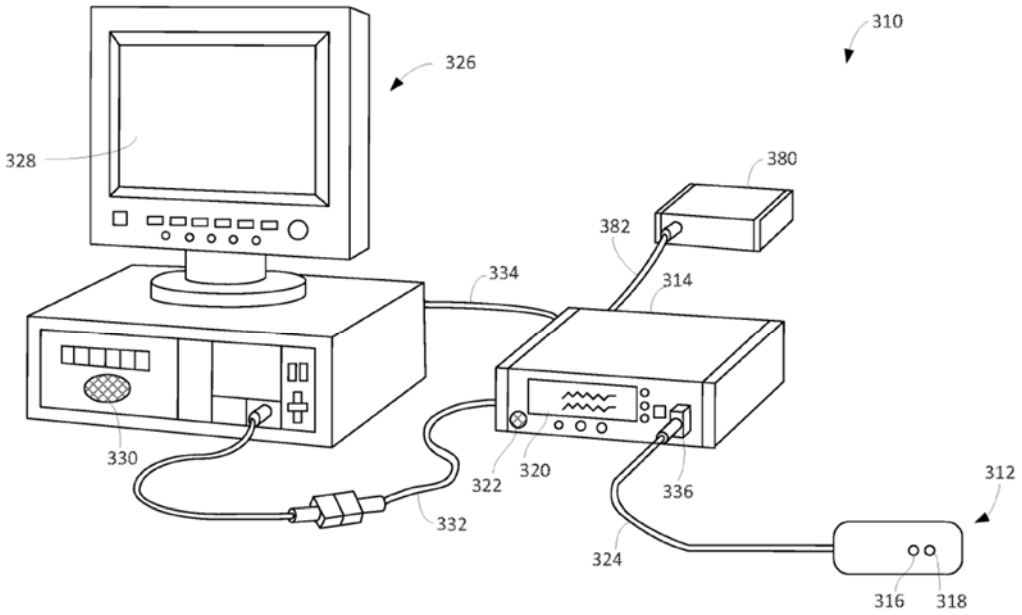

FIG. 3

Figure 3’s system may include one or more components of Figure 1’s system, specifically monitor 314 may be implemented as monitor 104.[6] Lisogurski,

[6] A POSITA would have understood that Figure 3 is an exemplary application of the embodiment shown in Figure 1, and that the disclosures in Figure 3 apply to the corresponding components or features in Figure 1. Anthony, ¶¶84-87.

17:30-35, 18:13-14. Sensor 312 and monitor 314 include similar configurations as sensor 102 and monitor 104, respectively. *See* Lisogurski, 17:37-62, 18:3-10, 19:25-27. ’533-FWD, 13-15; ’484-FWD, 13-15. Anthony, ¶87.

Monitor 314 “may communicate wirelessly” with MPPM 326. Lisogurski, 18:58-65. MPPM 326 “calculate[s] physiological parameters and...provide a display 328 for information from monitor 314,” and is “coupled to a network to enable the sharing of information with servers or other workstations.” Lisogurski, 18:49-52, 18:62-65. The remote network servers “determine physiological parameters,” and display the parameters on a remote display, display 320 of monitor 314, or display 328 of MPPM 326. Lisogurski, 20:53-58. ’533-FWD, 13-15; ’484-FWD, 13-15. Anthony, ¶88.

Lisogurski discloses various methods for improving signal-to-noise ratio including: modulating the light drive signal with a “period the same as or closely related to the period of [a] cardiac cycle,” using a dark subtraction process to remove noise from the ambient light, and varying light drive signal including drive current or light brightness, duty cycle, firing rate, and other suitable parameters. Lisogurski, 6:7-19, 9:46-60, 13:60-14:10, 16:33-54, 25:49-55. ’533-FWD, 17; ’484-FWD, 17-20. Anthony, ¶89.

2. Motivation to Modify Lisogurski

As the Board found in the prior ’533-IPR, a POSITA would have been

motivated to modify **Lisogurski's** physiological monitoring system 100 to "relocat[e] **control circuitry 110**, **light drive circuitry 120**, and **front end processing circuitry 150** of monitor 104 to sensor 102." '533-FWD, 22-25 (including annotated Fig. 1 below); *see also* '484-FWD, 24-25 (discussing incorporating front end processing circuitry into sensor). Anthony, ¶¶90-107.

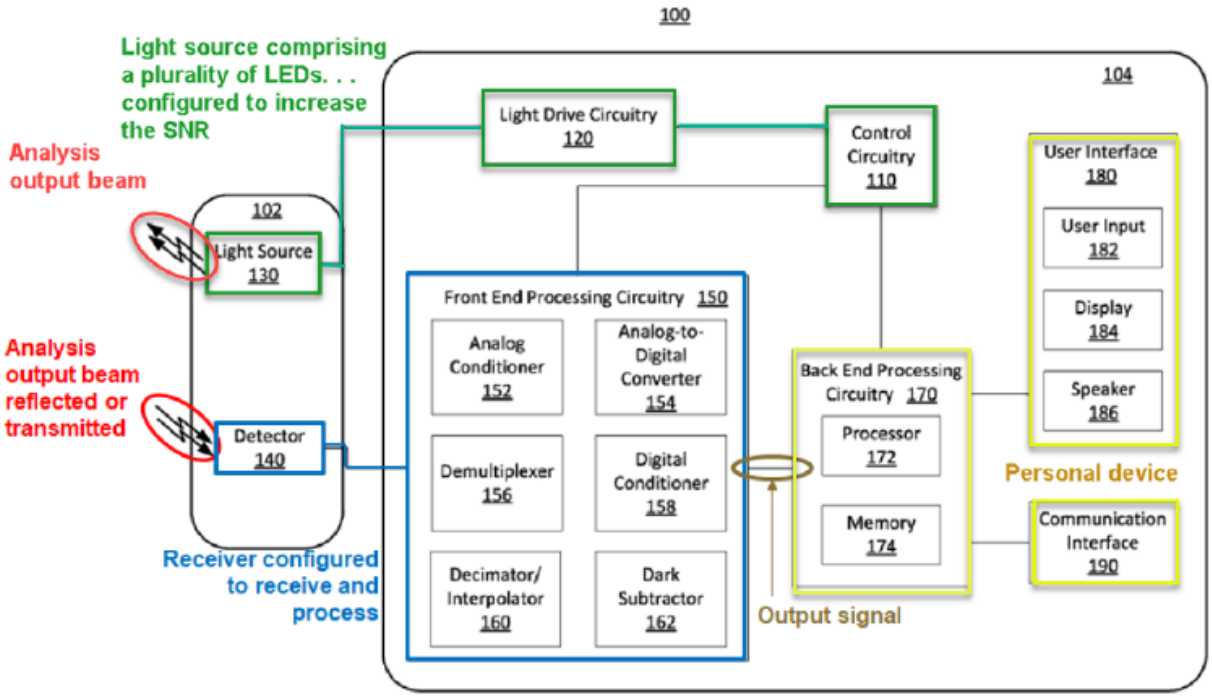

FIG. 1

As the Board found, "Lisogurski expressly suggests the modification by teaching embodiments in which 'the functionality of some of the components may be combined in a single component' and embodiments in which 'the functionality of some of the components of monitor 104…may be divided over multiple components.'" '533-FWD, 23 (quoting Lisogurski, 16:2-4, 16:7-9); *see also*

'484-FWD, 24-25. As to the **control circuitry 110** and **light drive circuitry 120**, because they work together to output the electric current applied to the light source, a POSITA would have understood or at least found it obvious to include the circuitry in the same device as the **light source**. *See* '533-FWD, 23 (citing '533-Pet., 32-34). As to the **front end processing circuitry 150**, because it performs analog-to-digital conversion and other initial processing of the signal, the Board also agreed that a POSITA would have understood or at least found it obvious to include it in the sensor where the signal is captured. *See* '533-FWD, 23-24 (citing '533-Pet., 47-48). Indeed, it was common for **light sources** to include **light drive circuitry and control circuitry**, and for a sensor to include a **front end processing circuitry**. *E.g.*, Exs.1036, 11:7-33 (signal processing circuitry integrated onto the same semiconductor chip as photodiode structure); 1034, 2:66-4:20, FIGS. 7-9 (photodetector with signal processing capability); 1035, 3:37-52, FIG. 2 (processing circuitry included into integrated smart sensor); 1031, 14:12-26, FIG. 18 (light driver circuit in probe); 1033, [0052], FIG. 4 (showing front end analog signal conditioning circuitry 330 in sensor 300); Anthony, ¶¶105-106. "[N]umerous industry trends motivate the modification," which "include improving the capabilities of wearable sensors for use in sports and personal fitness applications and wireless connecting wearable sensors to networks to remotely monitor patient health." '533-FWD, 23.

Anthony, ¶¶90-107.

3. Claim Limitations

a. [1.pre] "An apparatus adapted to be worn by a user comprising:"

Lisogurski's sensor 102/312 meets [1.pre]. To meet "a wearable device **adapted to be** placed on a wrist or an ear of **a user**" ('484 claim 1), the Board relied on **Lisogurski's** disclosure that the sensor (e.g., sensor 102/312) of its monitoring system is "placed at a site on a patient," including "the wrist to monitor radial artery pulsatile flow." '484-FWD, 23, 26-27 (citing '484-Pet., 27-28 (citing Lisogurski, 4:6-20)); *see also* Lisogurski, 10:44-46, 17:30-35. **Lisogurski's** sensor 102/312 is an apparatus. Anthony, ¶¶109-112.

b. [1.a] "one or more biosensors adapted to be placed on the user,"

Lisogurski's light source 130/316, detector 140/318, and front end processing circuitry 150, as modified (§IX.B.2), meet [1.a]. To meet "a wearable device **adapted to be placed on** a wrist or an ear of a **user**" ('484 claim 1), the Board relied on **Lisogurski's** disclosure that sensor (e.g., sensor 102/312) of its monitoring system is "placed at a site on a patient," including "the wrist to monitor radial artery pulsatile flow." '484-FWD, 23, 26-27 (citing '484-Pet., 27-28 (citing Lisogurski, 4:6-20)); *see also* Lisogurski, 10:44-46, 17:30-35. Sensor 102/312 includes light source 130/316 and detector 140/318, such that the light source 130/316, detector

140/318, and front end processing circuitry 150 within detector 140/318 as modified, are adapted to be placed on the user. Lisogurski, 10:48-49, 11:35-42, Figs. 1, 3. A POSITA would have understood that, together, a light source, detector, and front end processing circuitry (Lisogurski, 10:48-49, 11:35-42, Figs. 1, 3)—all of which are contained within **Lisogurski's** sensor as modified (§IX.B.2)—would comprise a "biosensor." *E.g.*, Ex.1052, 10:22-49. Anthony, ¶¶113-117.

As discussed (§IX.B.2), a POSITA would have been motivated (or at least found obvious) to include front end processing circuitry 150 where the detector 140 is located—in sensor 102/312—because, as the Board agreed, the front end processing circuitry performs analog to digital conversion and other initial processing of the signal and the detector is where the signal is captured. *See* '533-FWD, 23 (citing '533-Pet., 47-48). A POSITA would have understood that such modification would streamline the data transmission and minimize latency. Anthony, ¶118.

c. [1.b] "wherein one or more physiological parameters are measured,"

Lisogurski's sensor 102/312, with light source 130/316 and detector 140/318, meets [1.b]. To meet "[a] system for measuring **one or more physiological parameters**" ('484 claim 1), the Board relied on **Lisogurski's** "optical physiological monitoring system" that "may be used to determine physiological

parameters…." '484-FWD, 23, 26-27 (citing '484-Pet., 27-28 (citing Lisogurski, 1:10-25, 3:43-46, 3:61-4:5, 4:22-25, 15:30-35)). For example, **Lisogurski's** sensor measures physiological parameters by, first, having light source 130/316 "emit[ ] light into the tissue of a subject to generate physiological signals." Lisogurski, 10:52-56. These signals, after passing through the subject's tissue, are then captured by detector 140/318—also located in sensor 102/312—and are used to generate a "detection signal" that is then processed to determine physiological parameters. Lisogurski, 10:52-64, 11:13-27, 12:45-48. Anthony, ¶¶119-122.

d. [1.c] "wherein measuring of the one or more physiological parameters comprises a differential measurement, and wherein the one or more physiological parameters comprises a pulse rate monitoring and a blood flow measurement;"

Lisogurski further discloses and renders obvious wherein measuring of the one or more physiological parameters (*e.g.*, "physiological parameters"; *see* §IX.B.3.c.[1.b]) **comprises a differential measurement** (*e.g.*, performing a dark subtraction technique that "subtract[s] dark values from the Red and IR components to generate adjusted Red and IR signals," to "remove ambient and background signals"; *see* §IX.B.3.n.[1.m])**, and wherein the one or more physiological parameters comprises a pulse rate monitoring** (*e.g.*, monitoring "a patient's pulse rate") **and a blood flow measurement** (*e.g.*, "monitor[ing]…pulsatile flow"). Lisogurski, 4:3-5, 4:25-26. Anthony, ¶¶123-124.

Regarding "**wherein measuring of the one or more physiological parameters comprises a differential measurement**," as the Board relied on in finding limitations identical to [1.k]-[1.m] met (§§IX.B.3.l-n.[1.k]-[1.m]), **Lisogurski** discloses its "front end processing uses the current measured when the LEDs are off to generate a dark signal representative of ambient light," "measur[es] the signal when at least one LED is on to capture a portion of the optical beam, e.g., a red signal and an IR signal, reflected from the tissue," and uses "a 'dark subtraction' technique that subtracts the dark signal from the red and IR signals to generate adjusted red and IR signals with noise removed, thereby improving signal-to-noise ratio." '484-FWD, 43-44 (citing '484-Pet., 54-56 (citing Lisogurski, 6:7-19, 11:12-20, 12:52-13:6, 13:35-41, 13:60-14:10, 14:46-55, 16:33-54, 17:8-10, 17:40-42, FIGS. 2A-2B; *see also* §§IX.B.3.l-n.[1.k]-[1.m]. A POSITA would have understood (or at least found it obvious) that **Lisogurski's** "dark subtraction" technique is a differential measurement as it involves subtracting the results of two different measurements to improve signal-to-noise ratio. *E.g.*, Ex.1053, [0168] ("Differential measurements are often made in spectroscopy in order to enhance a signal-to-noise ratio or determine a difference in state….Typically, these techniques are subtraction or ratio determination in order to remove background information or enhance the analyte signal-to-noise ratio…."). Anthony, ¶¶125-126, 130.

Further, **Lisogurski** teaches that a plurality of its sensor 102/312 may be "positioned at two different locations" on the user's body, where the sensors monitor "a patient's pulse rate and blood pressure." Lisogurski, 4:25-36, 17:51-53. A POSITA would have found it obvious to perform **Lisogurski's** dark subtraction technique based on measurements from sensors "positioned at two different locations" on the user's body to advantageously enhance the signal-to-noise ratio. *See e.g.*, Ex. 1053, [0170]. Anthony, ¶131.

Regarding "**the one or more physiological parameters comprises a pulse rate monitoring and a blood flow measurement**," **Lisogurski** further teaches that its sensor 102/312 with light source 130/316 and detector 140/318 "measure[s] physiological parameters, such as a patient's pulse rate…." and "monitor[s]" "pulsatile flow" of the "carotid," "radial," "femoral," and "tibial" arteries. Lisogurski, 4:3-5, 4:15-20. Anthony, ¶127.

e. [1.d] "a light source comprising a plurality of light emitting diodes that are configured to generate an output optical light having one or more optical wavelengths;"

Lisogurski's sensor 102/312, with light source 130/316, meets [1.d]. To meet "**a light source comprising a plurality of** semiconductor sources that are **light emitting diodes**, the light emitting diodes **configured to generate an output optical** beam with **one or more optical wavelengths**" ('533 claims 5/13), the Board

relied on **Lisogurski's** "[s]ensor 102/312" "contain[ing] multiple LEDs that emit and direct light toward a subject's tissue, including an LED that emits red light, and an LED that emits infrared light having a wavelength between 800 and 1000 nm." '533-FWD, 25-26 (citing '533-Pet., 29-30 (citing Lisogurski, 4:42-45, 7:38-8:3, 10:48-52, 10:56-64, 17:37-45, 19:25-31, FIGS. 1 (130), 3 (316))); *see also* Lisogurski, 10:52-56; '484-FWD, 23, 26-27. LEDs are semiconductor sources. Ex. 1039, 2:6-9. Anthony, ¶¶132-137.

f. [1.e] "one or more lenses configured to receive at least a portion of the output optical light and to deliver a lens output light to tissue comprising skin;"

Lisogurski's sensor 102/312 teaches or at least renders obvious [1.e]. **Lisogurski** discloses that its "sensor 102" includes "LEDs" (Lisogurski, 10:48-56) and, to meet "…a plurality of **lenses configured to receive a portion of the output optical** beam **and to deliver** an analysis **output** beam **to** a sample" ('533 claims 5/13), the Board found that (1) a POSITA "would have known that LEDs are often covered by lensing encapsulants and would have selected such LEDs for [Lisogurski's] wireless sensor 102/312 in order to 'direct more of the light produced by the LED outward toward the tissue,' thereby improving the efficiency of wireless, battery-powered, sensor 102/312," and, (2) knowing that "a lens is a 'basic building block' of an optical sensor," that a POSITA would have included lenses in **Lisogurski's** wireless sensor 102/312. '533-FWD, 35-36 (citing '533-Pet., 39-41

(citing Lisogurski, 7:38-8:3, 10:53-56, 19:25-31; Ex.1037, 97-98, 191-99, 266-67; Ex.1038, 765)); *see also* '484-FWD, 23, 26-27 (finding **Lisogurski** meets substantially identical limitation); Anthony, ¶¶138-144.

g. [1.f] "a detection system configured to receive at least a portion of the lens output light reflected from the tissue and to generate an output signal having a signal-to-noise ratio,"

Lisogurski's detector and front end processing circuitry meet [1.f]. To meet the same limitation, the Board relied on the modified embodiment of **Lisogurski** (§IX.B.2), specifically the "detection system in the form of a sensor with one or more detectors connected to front-end processing circuitry that may receive a detection signal, i.e., light that is reflected by or has traveled through the subject's tissue, from detector 140, and provides processed signals, i.e., electrical signals based on the intensity of the reflected light, to back-end circuitry 170." '484-FWD, 23-24, 26-27 (citing '484-Pet., 33-34 (citing Lisogurski, 11:9-10, 11:14-17; 11:20-27, 12:42-45, 17:40-42, FIGS. 1 (102), (140), 3 (312), (318))); *see also* '533-FWD, 37-39; Lisogurski, 14:60-62. The Board further noted that "the processed signals originate from detection signals that have a signal-to-noise ratio." '484-FWD, 23-24, 26-27 (citing '484-Pet., 33-34 (citing Lisogurski, 9:46-52, 11:20-27, 14:49-50)); *see also* '533-FWD, 37-39; Lisogurski, 11:41-46. Anthony, ¶¶145-152.

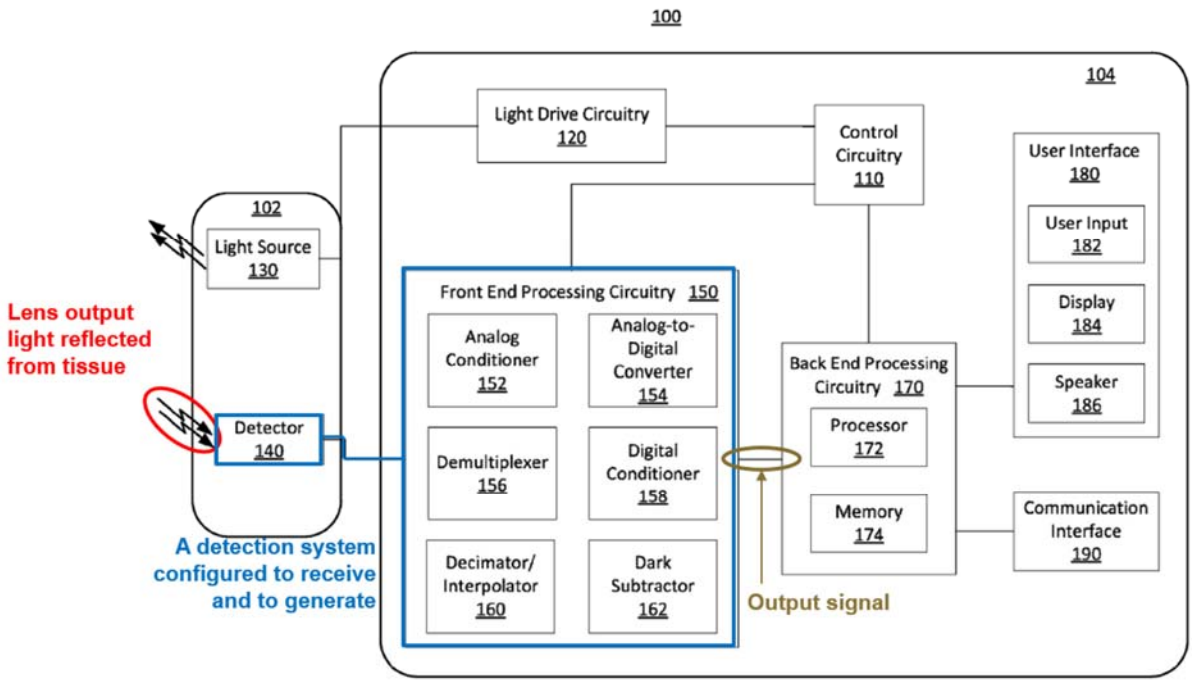

FIG. 1

h. [1.g] "wherein the detection system is configured to be synchronized to the light source,"

Lisogurski's front end processing circuitry meets [1.g]. To meet the same limitation, the Board relied on the modified embodiment of **Lisogurski** (§IX.B.2), specifically that front end processing circuitry 150 within the detector "operat[es] synchronously with light drive circuitry 120, e.g., by synchronizing the sampling rate of an analog to digital converter to a modulated LED firing rate to provide, e.g., one or more samples to be averaged per period." '484-FWD, 24-27 (citing '484-Pet., 34-35 (citing Lisogurski, 2:1-2, 11:41-46, 27:44-52, 33:47-49, 35:17-23, 35:25-31)); *see also* '533-FWD, 37-39; Lisogurski, 6:16-19, 11:50-54, 16:48-54, 16:67-17:2, FIG. 1. Anthony, ¶¶153-159.

i. [1.h] "wherein the detection system comprises a plurality of detectors that are spatially separated from each other, and wherein at least one analog to digital converter is coupled to at least one of the plurality of detectors;"

Lisogurski's detector 140/318 meets [1.h]. To meet "**wherein the detection system comprises a plurality of** spatially separated **detectors, and wherein at least one analog to digital converter is coupled to at least one of the** spatially separated **detectors**" ('484, claim 1), the Board relied on **Lisogurski's** disclosure of "[o]ne or more detector 318…for detecting the light that is reflected by…the subject's tissue" and that the sensor "may include multiple…detectors, which may be spaced apart." *See* '484-FWD, 25-27 (citing '484-Pet., 38-40 (citing Lisogurski, 11:9-10, 17:40-45, Figs. 1 (140), 3 (318)). The Board further relied on **Lisogurski's** disclosure that the electrical signals generated by the detectors are received by the front-end processing circuitry—including an analog-to-digital converter—and are passed between the components of the circuitry. *See* '484-FWD, 25-27 (citing '484-Pet., 38-40 (citing Lisogurski, 13:6-60, Figs. 1 (140), 3 (318)). Anthony, ¶¶163-166.

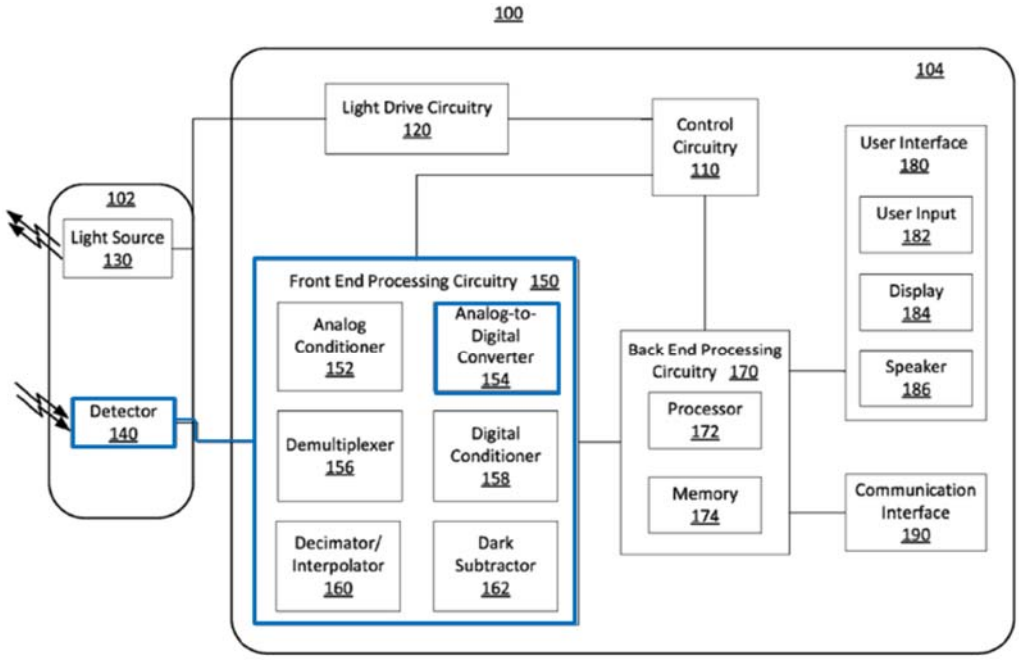

FIG. 1

j. [1.i] "wherein the output signal is indicative of the one or more physiological parameters;"

Lisogurski's data (i.e., an output signal, transmitted to a server, monitor, or remote device) meets [1.i]. To meet the same limitation, the Board relied on **Lisogurski's** disclosure "that data, i.e., an output signal transmitted to a server, monitor, or remote device may be stored or published, [and] that MPPM 326, is configured to calculate physiological parameters" based on the transmitted data such that the transmitted data, or processed data, from **Lisogurski's** sensor 102/312 as modified (§IX.B.2), is indicative of physiological parameter(s). '484-FWD, 26-27 (citing '484-Pet., 44 (citing Lisogurski, 18:49-53, 19:1-19, 20:8-13, 20:53-55,

26:55-60)); *see also* Lisogurski, 3:66-4:5 (measuring "various blood flow characteristics including, but not limited to, the oxygen saturation of hemoglobin in arterial blood…" and "a patient's pulse rate and blood pressure."), 4:6-62, 12:9-16, 14:60-64, 17:59-67. Anthony, ¶¶170-174.

k. [1.j] "the apparatus being configured to increase the signal-to-noise ratio by increasing light intensity of at least one of the plurality of light emitting diodes from an initial light intensity; and"

Lisogurski's sensor 102/312 meets [1.j]. To meet "the wearable device **configured to increase the signal-to-noise ratio by increasing light intensity of at least one of** t**he plurality of** semiconductor sources **from an initial light intensity**" ('484, claim 1), the Board relied on **Lisogurski's** disclosures "that by increasing light intensity the system may increase the brightness of light sources in response to noise to improve signal to noise ratio," where "brightness (light intensity) [is] a parameter of the light drive signal, i.e., the signal that drives the LED" generated by light drive circuitry within sensor 102/312 as modified (§IX.B.2). '484-FWD, 27 (citing '484-Pet., 45-48 (citing Lisogurski, 1:19-21, 1:44-46, 1:67-2:3, 5:55-6:6, 9:46-60, 10:48-49, 11:38-41, 11:50-54, 14:49-55, 25:49-55; 31:11-24, 31:39-55, 35:5-9, 37:6-22)); '533-FWD, 26. **Lisogurski's** sensor 102/312 is an apparatus (§IX.B.3.a.[1.pre]). Anthony, ¶¶175-181.

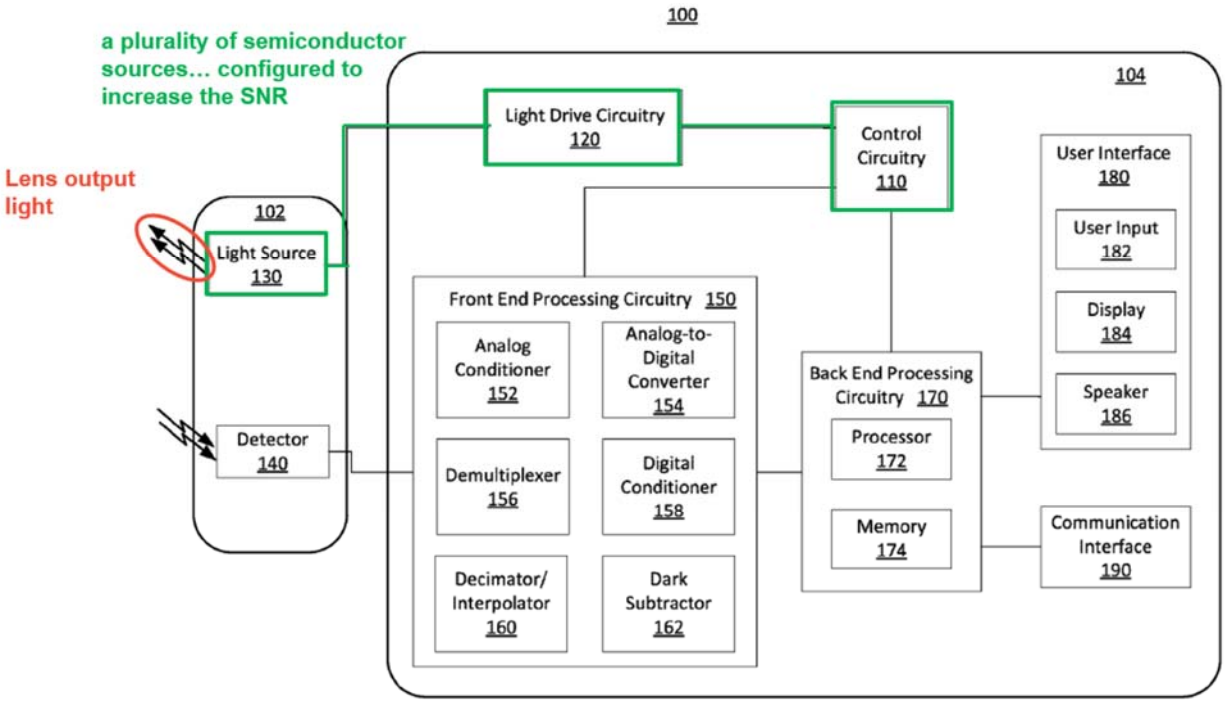

FIG. 1

l. [1.k] "the detection system further configured to: generate a first signal responsive to light received while the light emitting diodes are off,"

Lisogurski's front end processing circuitry meets [1.k]. To meet the same limitation, the Board relied on **Lisogurski's** disclosure of "front end processing us[ing] the current measured when the LEDs are off to generate a dark signal representative of ambient light." '484-FWD, 43-44 (citing '484-Pet. 54-55 (citing Lisogurski, 6:7-19, 11:14-16, 12:59-13:6, 13:35-41, 13:60-14:10, 16:33-54, FIGS. 2A-2B)). Anthony, ¶¶182-185.

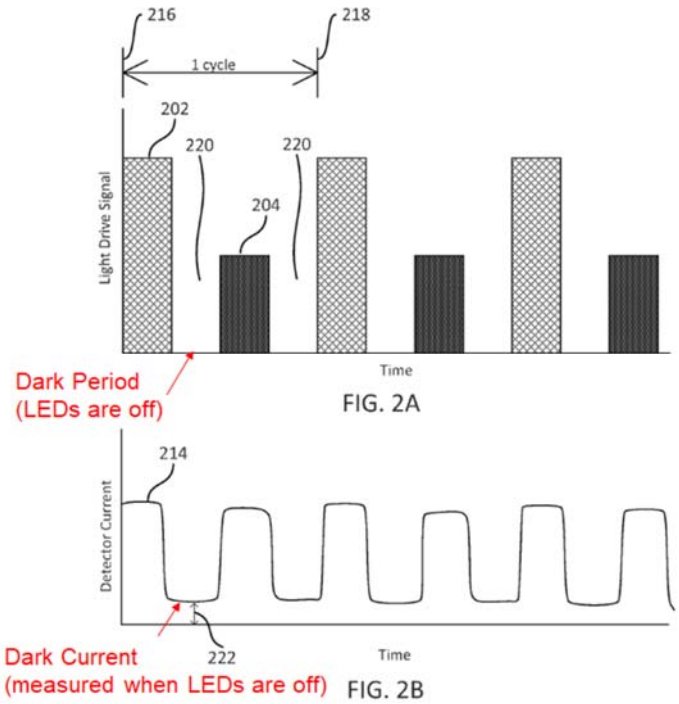

m. [1.l] "generate a second signal responsive to light received while at least one of the light emitting diodes is on, and"

Lisogurski's front end processing circuitry meets [1.l]. To meet the same limitation, the Board relied on **Lisogurski's** disclosure of a "front end processing circuitry measuring the signal when at least one LED is on to capture a portion of the optical beam, e.g., a red signal and an IR signal, reflected from the tissue." '484-FWD, 43-44 (citing '484-Pet., 55-56 (citing Lisogurski, 6:12-19, 11:12-20, 12:52-13:6, 13:35-41, 13:67-14:2, 16:52-53, 17:8-10, 17:40-42, FIGS. 2A-2B)). Anthony, ¶¶186-189.

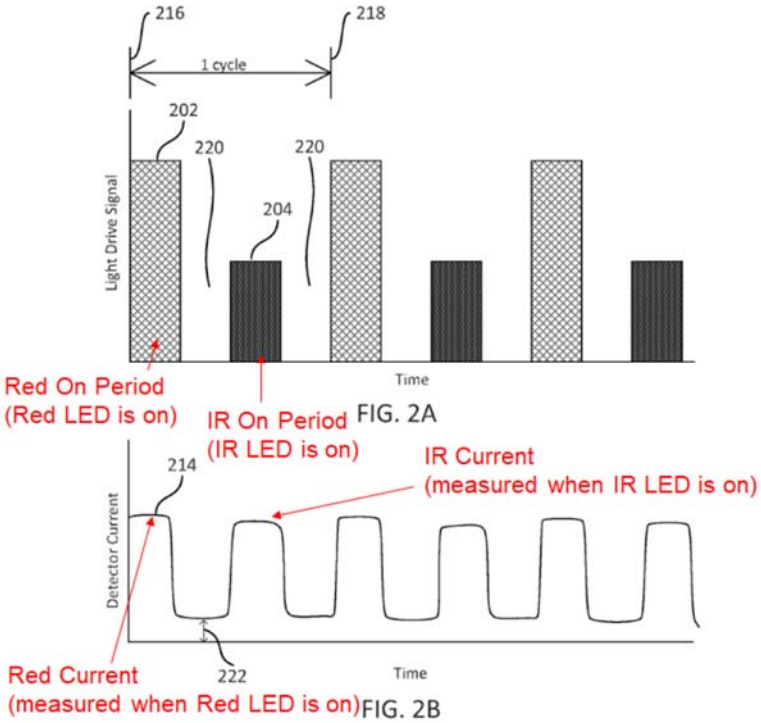

n. [1.m] "increase the signal-to-noise ratio by comparing the first signal and the second signal; and"

Lisogurski's front end processing circuitry meets [1.m]. To meet the same limitation, the Board relied on **Lisogurski's** disclosure of a "dark subtraction" technique that "subtracts the dark signal from the red and IR signals to generate adjusted red and IR signals with noise removed, thereby improving signal-to-noise ratio." '484-FWD, 44 (citing '484-Pet., 54, 57 (citing Lisogurski, 6:7-19, 13:60-14:10, 14:46-55, 16:33-54)). Anthony, ¶¶190-192.

o. [1.n] "wherein the apparatus is at least in part configured to determine, based at least in part on the output signal, that the apparatus is being worn by the user."

Lisogurski discloses and renders obvious wherein the apparatus (*e.g.*,

"sensor"; §IX.B.3.a.[1.pre]) **is at least in part configured to determine, based at least in part on the output signal** (*e.g.*, based on when the "processed signals"; §IX.B.3.g.[1.f])**, that the apparatus** (*e.g.*, "sensor"; §IX.B.3.a.[1.pre]) **is being worn by the user** (*e.g.*, detects an "error" due to "a physiologically impossible value" or a "probe-off signal")**.** Lisogurski, 15:66-16:4, 36:66-37:2. Anthony, ¶¶196-197.

Lisogurski further discloses that its system "detect[s] a signal indicative of a system error such as a physiologically impossible value," or "a probe-off signal." Lisogurski, 36:66-37:2. A POSITA would have understood (or at least found it obvious) that it is **Lisogurski's** sensor within the system that detects "physiologically impossible value," or "a probe-off signal." **Lisogurski** explicitly discloses that, in its system, "the functionality of some of the components may be combined in a single component," (Lisogurski, 15:66-16:4) and incorporating these functionalities into **Lisogurski's** sensor would be consistent with the growing industry trend toward integrating additional features into wearable sensors (§IX.B.2). Anthony, ¶198. Further, a POSITA would have understood (or at least found obvious) that "physiologically impossible value" describes an error condition in which the sensor produces a nonsensical physiological parameter because, e.g., the sensor was improperly attached to the measurement region on the user or became

dislodged from the user (i.e., not properly "worn by the user"), such that the "physiologically impossible value" is determined at **Lisogurski's** sensor. Anthony, ¶198. **Lisogurski** further contemplates an error condition that occurs when the sensor is not worn by the user at all, such as when a "probe-off signal" is detected. Lisogurski, 36:66-37:2. Thus, when a "probe-off signal" is not detected, **Lisogurski's** sensor would determine that the apparatus is being worn by the user. A POSITA would thus have understood (or at least found obvious) that the processed signals (*see* §IX.B.3.g.[1.f]) are used by **Lisogurski's** sensor to determine—not only whether the sensor is not being worn—but also when it ***is*** being worn by the user. Anthony, ¶198. Indeed, it was well-known in the art for physiological measuring devices to incorporate mechanisms to detect both that the device is being worn and not worn. *E.g.*, Ex.1058, claim 1, [0025], [0030], [0034] (disclosing a "pulse wave monitoring system," that includes "attachment means," which is "attached to a part of a human body," along with a "sensor 2" and a "attachment detection circuit 3" that work together to "determine[] whether the attachment means 1 is fitted over a finger 11"). Anthony, ¶198.

p. [6] "The apparatus of claim 1, wherein the plurality of light emitting diodes comprises six light emitting diodes, and wherein the detection system comprises the plurality of detectors arranged along an arc."

See §§IX.B.3.a-o.[1.pre]-[1.n]. **Lisogurski teaches or at least renders**

obvious wherein the plurality of light emitting diodes (*e.g.*, "multiple LEDs"; §IX.B.3.e.[1.d]) **comprises six light emitting diodes** (*e.g.*, six "LEDs")**, and wherein the detection system** (*e.g.*, one or more "detectors" connected to "front-end processing circuitry" that may receive a "detection signal"; §IX.B.3.g.[1.f]) **comprises the plurality of detectors** (*e.g.*, the "one or more detector[s]"; §IX.B.3.g.[1.f]) **arranged along an arc** (*e.g.*, "[a]ny suitable configuration of…detector 318 may be used," including having the detectors arranged along an arc). **Lisogurski,** 10:52-60, 10:65-11:6, 11:16-20, 17:37-45, 19:22-31, 27:36-43. Anthony, ¶¶199-201.

As the Board already found, the majority of this limitation is met by **Lisogurski** for the same reasons set forth above. *See* §§IX.B.3.e.[1.d] ("a plurality of light emitting diodes"), IX.B.3.i.[1.h] ("a plurality of detectors"). Anthony, ¶202.

Regarding **six light emitting diodes**, it merely specifies the number of LEDs and should not be afforded patentable weight. *See In re Applied Materials, Inc.*, 692 F.3d 1289, 1297 (Fed. Cir. 2012) (affirming obviousness because prior art disclosed values within claimed range, and there was no evidence "that the claimed range [was] 'critical'" or "'achieves unexpected results'"). Regardless, **Lisogurski** further teaches light source 130 with "any number of" "LEDs" as light sources. Lisogurski, 10:52-60; 10:65-11:6, 17:37-39, 17:43-45, 19:22-31, 27:36-43. It was well-known

in the art that additional lights result in increased measurement accuracy. Lisogurski, 24:58-25:3; LeBoeuf, [0153]; Ex.1033, [0035], [0033]-[0037]. A POSITA would thus have understood (or at least found it obvious) that **Lisogurski's** sensor comprises multiple number of (e.g., six or more) LEDs to advantageously detect "additional significant absorbers." *See, e.g.*, Ex.1033, [0035] ("[U]tilizing multiple wavelengths provide[s] a multi-dimensional calibration curve, which can be used to provide multiple degrees of freedom to compensate for variation in other physiologically-related parameters….[A]dding wavelengths sensitive to additional significant absorbers can help the system compensate for the additional significant absorbers and enable more accurate calculation of the concentration of each absorber and the blood oxygen saturation."), [0041] ("A sensor 300 has n LEDs 302, which…emit light of different wavelengths….[and can] include four, six, eight or sixteen LEDs of different wavelengths."). Anthony, ¶¶203-208.

Regarding **plurality of detectors arranged along an arc**, **Lisogurski** further discloses that "[o]ne or more detector 318" may be arranged in "[a]ny suitable configuration." Lisogurski, 17:39-43. A POSITA would have understood (or at least found it obvious) to arrange the multiple detectors of **Lisogurski's** sensor in an arc configuration because a POSITA would appreciate that light emitted into biological tissue undergoes significant scattering and absorption, and the reflected

light exits the tissue at a wide range of angles (Lisogurski, 11:16-20) such that a linear or closely grouped detector arrangement would fail to capture much of this angularly scattered light. *See, e.g.*, Ex.1045, 4:14-65; Anthony, ¶209. Accordingly, a POSITA would have been motivated to arrange in an arc to capture more of the reflected light, thereby improving the detection of scattered light from biological tissue and increasing the signal-to-noise ratio of **Lisogurski's** sensor. Anthony, ¶209.

q. [7] "The apparatus of claim 6, wherein the apparatus is further configured to communicate with a smart phone or a tablet, the smart phone or the tablet comprising a wireless receiver, a wireless transmitter, a display, a speaker, a voice input module, one or more buttons or knobs, a microprocessor, and a touch screen."

See §IX.B.3.p.[6]. **Lisogurski's** monitor meets [7]. To meet "**the smart phone or tablet comprising a wireless receiver, a wireless transmitter, a display, a speaker, a voice input module, one or more buttons or knobs, a microprocessor and a touch screen…"** ('484 claim 1), the Board relied on **Lisogurski's** "sensor[] designed to be used with a monitor that may be a portable, battery powered system that includes a touchscreen and has back-end processing that receives signals from the front end and includes a microprocessor and an interface with a display, speaker, and microphone" and that "the back-end processing…can be configured for wireless communication." '484-FWD, 25-27 (citing '484-Pet., 40-42 (citing Lisogurski, 1:16-18, 14:56-66, 15:19-27, 15:43-57, 18:49-66,

20:55-60, FIG. 1)); ’533-FWD, 39-42; *see also* Lisogurski, 14:67-15:16, 15:30-42, 18:3-5, FIG. 3. As the Board agreed, a POSITA would have found it obvious that **Lisogurski’s** monitor 104, which is “portable,” “battery powered,” and has a “user interface” with “a touch screen,” would include a smart phone or tablet. ’484-FWD, 25-27. Anthony, ¶¶212-221.

To show that **Lisogurski’s** monitor 104 as modified (§IX.B.2) comprises a “**wireless receiver, a wireless transmitter, a display, a speaker,** a microphone**, one or more buttons or knobs**, **a microprocessor and a touch screen”** (’533 claims 5/13, ’484 claim 1), the Board relied on **Lisogurski’s** monitor 104 including “communication interface 190” (including “one or more receivers” and “transmitters” “configured to allow…wireless communication”), user interface 180 (including “display 184,” “speaker 186,” and user input 182 further including “microphone,” “buttons,” and “touch screen”), and “back-end processing circuitry 170” (including “microprocessor 172”). ’533-FWD, 40, 42-43 (citing ’533-Pet., 50-51); ’484-FWD, ’484-FWD, 25-27 (citing ’484-Pet. 40-42); Lisogurski, 14:60-15:16, 15:19-23, 15:30-35, 15:43-57, 18:11-15, 18:49-65, 26:55-60, 27:31-36, Fig. 1. Anthony, ¶¶212-221.

Further, regarding **buttons or knobs**, **Lisogurski** discloses that its user interface includes “any type of user input device such as…buttons….” Lisogurski,

15:20-27. Regarding, **the apparatus configured to communicate with a smart phone or a tablet**, **Lisogurski** discloses that "[m]onitor 104 may be communicatively coupled to sensor 102," and that "the sensor may be wirelessly connected to monitor 314" and "[m]onitor 314 may include a sensor interface configured to receive physiological signals from sensor unit 312, provide signals and power to sensor unit 312, or otherwise communicate with sensor unit 312." Lisogurski, 17:58-59, 18:25-28. Anthony, ¶¶212-221

r. [8.pre] "A wearable device configured to be worn by a user, the wearable device comprising:"

Lisogurski meets [8.pre] for the reasons set forth in [1.pre]. *See* §IX.B.3.a.[1.pre]. Anthony, ¶¶222-224.

s. [8.a] "a light source configured to be on or off, responsive to the light source being on, the light source generates an output light;"

The majority of [8.a] is met by **Lisogurski** for the same reasons set forth above. *See* §§IX.B.3.e.[1.d] ("**a light source** comprising a plurality of light emitting diodes that are **configured to generate an output** optical **light** having one or more optical wavelengths"); IX.B.3.l.[1.k] ("…light emitting diodes are **off**"). Anthony, ¶¶225-226.

Regarding **a light source configured to be on or off**, **Lisogurski** further discloses that "light source 130" is configured "to turn on and off" based on a "light

drive signal" "generat[ed]" by "light drive circuitry 120." Lisogurski, 11:38-41. Anthony, ¶227.

Regarding **responsive to the light source being on, the light source generates an output light**, **Lisogurski** further discloses that "light drive signal" that is "generat[ed]" by "light drive circuitry 120" "to turn on and off" is also "used by a light source to emit a photonic signal." Lisogurski, 11:38-41, 19:21-22. Anthony, ¶228.

t. [8.b] "a lens positioned to direct at least a portion of the output light towards a bodily tissue of the user;"

Lisogurski meets [8.b] for the reasons set forth in [1.e]. *See* §IX.B.3.f.[1.e]. Anthony, ¶¶229-232.

u. [8.c] "a detector; and"

Lisogurski meets [8.c] for the reasons set forth in [1.h]. *See* §IX.B.3.i.[1.h]. Anthony, ¶¶233-235.

v. [8.d] "a processor configured to: (i) responsive to the light source being on and the detector receiving at least a portion of the output light that is reflected from the bodily tissue of the user, generate a first output signal having a first signal-to-noise ratio; and"

The majority of [8.d] is met by **Lisogurski** for the same reasons set forth above. *See* §§IX.B.3.g.[1.f] ("a detection system configured to **receive at least a portion of the** lens **output light reflected from the tissue** and to **generate** an output

signal having a signal-to-noise ratio"), IX.B.3.m.[1.l] ("**generate a** second **signal responsive to light** received while at least one of the light emitting diodes is **on**"). Anthony, ¶¶236-237.

Regarding **a processor**, **Lisogurski** discloses that its front end processing circuitry 150 "perform[s] various analog and digital processing" of "the output signal of detector 104." Lisogurski, 12:42-50. A POSITA would have understood (or at least found it obvious) that **Lisogurski's** front end processing circuitry is the well-known concept of a processor. For example, **Lisogurski** explicitly discloses that "all of the components of physiological monitoring system 100 can be realized in processor circuitry." Lisogurski, 16:14-16. Further, implementing front end processing circuitry as a processor was well-known in the art. *E.g.*, Ex.1054, 27:42-45, 29:34-39 ("the functionality of…pre-processing circuitry 414 may be performed by…a single processor"). Anthony, ¶238.

w. [8.e] (ii) responsive to the light source being off and the detector receiving ambient light, generate a second output signal having a second signal-to-noise ratio;

Lisogurski discloses responsive to the light source being off (e.g., during a "dark periods 220" / "'off' period 220," which occurs while light source is turned off) **and the detector receiving ambient light** (e.g., detector 140/318 detects "ambient light"), **generating a second output signal having a second signal-to-**

noise ratio (e.g., front end processing circuitry generates a "dark signal," having a second signal-to-noise ratio). Lisogurski, 6:7-19, 11:14-16, 12:23-41, 12:59-13:6, 13:67-14:6, 16:33-54, Figs. 2A-B. Anthony, ¶¶239-240.

The Board agreed **Lisogurski** discloses "generat[ing] a … signal responsive to light received while the [light source is] off." '484-FWD, 43-44 (citing '484-Pet., 54-55 (citing Lisogurski, 6:7-19, 11:14-16, 12:59-13:6, 13:67-14:6, 16:33-54, Figs. 2A-B)). In making this finding, the Board relied on **Lisogurski's** disclosure of "turning on a … light source, followed by a 'dark period,'" which is a period during which light source is turned off. '484-FWD 43-44 (citing '484-Pet., 54 (citing Lisogurski, 6:12-15)); *see also* Lisogurski, 12:23-41. The Board also relied on **Lisogurski's** disclosure that the current measured when the light source is off is used by the front end processing to generate a "dark signal." '484-FWD, 43-44 (citing '484-Pet. 54 (citing Lisogurski, 12:59-13:6, 11:14-16)); *see also* Lisogurski, 6:16-19, 13:67-14:6. **Lisogurski** discloses that its "detection signals" have "a signal to noise ratio." Lisogurski, 14:49-50. A POSITA would have thus understood (or at least found it obvious) that the generated dark signal, which is a detection signal, has a signal-to-noise ratio. Lisogurski, 14:49-50. Anthony, ¶¶241-243.

x. [8.f] "(iii) generate a third output signal using at least a portion of the first output signal and at least a portion of the second output signal, the third output signal having a third signal-to-noise ratio that is

greater than the first signal-to-noise ratio and greater than the second signal-to-noise ratio, the third output signal being associated with a physiological parameter of the user; and"

[8.f] is met by **Lisogurski** for the same reasons set forth above. *See* §§IX.B.3.j.[1.i], IX.B.3.n.[1.m], IX.B.3.v-w.[8.d]-[8.e]. Specifically, **Lisogurski discloses generating a third output signal** (*e.g.*, an output signal generated after application of a dark subtraction technique that "subtract[s] dark values from the Red and IR components to generate adjusted Red and IR signals," to "remove ambient and background signals"; §IX.B.3.n.[1.m]) **using at least a portion of the first output signal** (*e.g.*, §IX.B.3.v.[8.d]) **and at least a portion of the second output signal** (*e.g.*, §IX.B.3.w.[8.e])**, the third output signal having a third signal-to-noise ratio that is greater than the first signal-to-noise ratio and greater than the second signal-to-noise ratio** (*e.g.*, signal generated with "ambient and background signals" "remove[d]," and thereby reducing the "detrimental effect[s] on the signal-to-noise ratio of the detection signal"; §IX.B.3.n.[1.m])**, the third output signal being associated with a physiological parameter of the user** (*e.g.*, the "output signal…is configured to calculate physiological parameters"; §IX.B.3.j.[1.i]). Lisogurski, 6:7-19, 13:60-14:10, 14:46-55, 16:33-54. Anthony, ¶¶244-246.

As discussed (§IX.B.3.n.[1.m]), **Lisogurski's** "dark subtraction" technique

"subtracts the dark signal [(second output signal)] from the red and IR signals [(first output signal)] to generate adjusted red and IR signals [(third output signal)] with noise removed, thereby improving signal-to-noise ratio." '484-FWD, 44 (citing '484-Pet., 54 57 (citing Lisogurski, 6:7-19, 13:60-14:10, 14:46-55, 16:33-54). Further, **Lisogurski** discloses "more ambient light noise in the input of analog-to-digital converter" has "a detrimental effect on the signal-to-noise ratio of the detection signal," and that "signal modification techniques," such as its dark subtraction technique described above, "may be employed to reduce the effect of ambient light on the detection signal that is applied to analog-to-digital converter 154, and thereby reduce the contribution of the noise component to the converted digital signal." Lisogurski, 14:46-55. Therefore, a POSITA would have understood (or at least found it obvious) that the resulting third ("adjusted") signal would have an improved signal-to-noise ratio. *See, e.g.*, Ex.1057, 10:41-56, 11:1-16, 19:5-25. Anthony, ¶247.

y. [8.g] "(iv) determine, based at least in part on the third output signal, that the wearable device is being worn by the user."

See §§IX.B.3.r.[8.pre], IX.B.3.x.[8.f]. **Lisogurski** discloses **determining, based at least in part on the third output signal**, **that the wearable device is being worn by the user** (*e.g.*, using the "dark subtract[ed]" signal as part of determining "physiologically impossible value" or "probe off signal"). Lisogurski,

16:12-14, 36:66-37:2. Anthony, ¶¶248-250.

As discussed (§IX.B.3.n.[1.m]), **Lisogurski** discloses **determining based at least in part an output signal, that the wearable device is being worn by the user** (§IX.B.3.o.[1.n]). A POSITA would have understood (or at least found it obvious), that **Lisogurski's** process of determining whether the wearable device is being worn by a user uses the resulting third output signal from **Lisogurski's** dark subtraction process described above (§§IX.B.3.v-x.[8.d]-[8.f]). As discussed (§IX.B.3.o.[1.n]), **Lisogurski** discloses an error condition that occurs when the sensor is not worn by the user at all, such as when a "probe-off signal" is detected. Lisogurski, 36:66-37:2. **Lisogurski** further discloses that its sensor 102/312 "detect[s] a signal indicative of a system error such as a physiologically impossible value." Lisogurski, 36:66-37:2. To ensure accurate detection of such "probe-off signal" or "physiologically impossible value," and to avoid a situation where noises affect such detection, a POSITA would have understood (or at least found obvious) that the determination of "physiologically impossible value" or "probe-off signal" would be based at least in part on the "dark subtract[ed]" signal (*i.e.*, removing ambient noise) in order to more accurately detect whether the sensor is being worn. §IX.B.3.o.[1.n]; Lisogurski, 16:12-14. Anthony, ¶¶251-253.

Indeed, determining whether a sensor is being worn based on a dark subtracted

signal was well-known in the art. *E.g.*, Ex.1057, 18:45-51 ("In step 510, the system may analyze the first and second signals to identify similar behavior. For example, the analysis may include a comparison of the first signal (e.g., the detected ambient light) to the second signal (e.g., the detected light signal). Comparisons may include Subtraction, division, multiplication, integration, any other Suitable function, or any combination thereof."), 20:4-6 (subsequently, "[i]n step 512, the system may determine that the physiological sensor is not properly positioned. The system may determine this based on the analysis of step 510."). Anthony, ¶254.

z. [11] "The wearable device of claim 8, wherein at least a portion of the output light has an optical wavelength between about 700 nanometers and about 2500 nanometers."

See §§IX.B.3.r-y.[8.pre]-[8.g]. **Lisogurski's** sensor with light source meets [11]. To meet "**…wherein at least a portion of the** one or more **optical wavelength**s is a near-infrared wavelength **between 700 nanometers and 2500 nanometers,**" ('533 claims 5/13), the Board relied on **Lisogurski's** disclosure that "[s]ensor 102/312 can contain multiple LEDs that emit and direct light toward a subject's tissue, including an LED that emits red light, and an LED that emits infrared light having a wavelength between 800 and 1000 nm." '533-FWD, 25-26 (citing '533-Pet., 29-30 (citing Lisogurski, 4:42-45, 7:38-8:3, 10:48-52, 10:56-64, 17:37-45, 19:25-31, FIGS. 1 (130), 3 (316))); '484-FWD, 23, 26-27; *see also*

Lisogurski, 10:52-56. A POSITA would have understood that IR light with 800-1000nm of wavelength falls within the near-infrared region. Anthony, ¶¶255-260.

aa. [12] "The wearable device of claim 8, wherein the physiological parameter of the user is associated with a blood constituent or a blood flow of the user."

See §§IX.B.3.r-y.[8.pre]-[8.g]. **Lisogurski** meets [12] for the reasons set forth in [1.c]. *See* §IX.B.3.d.[1.c]. Anthony, ¶¶261-263.

Lisogurski further discloses that its sensor 102/312 can be used to determine "an amount of a blood constituent (e.g., oxyhemoglobin)." Lisogurski, 4:36-41. Anthony, ¶264.

bb. [13] "The wearable device of claim 8, wherein the processor is further configured to modulate the light source with a modulation frequency."

See §§IX.B.3.r-y.[8.pre]-[8.g]. **Lisogurski discloses wherein the processor** (*e.g.*, "front end processing circuitry 150"; §IX.B.3.v.[8.d]) **is further configured to modulate the light source**[7] (*e.g.*, "operate a…light source according to

[7] In related matters involving patents in the same family, that have claims reciting "modulating [of] at least one of the LEDs," the Court construed the term to mean "varying [of] the amplitude, frequency, or phase of the light produced by at least one of the LEDs to include information." *See, e.g.*, Ex.1018.

a…cardiac cycle modulation technique," which entails "generat[ing] a light drive signal that varies with a period the same as or closely related to the period of the cardiac cycle," and "apply[ing this] cardiac cycle modulation to [the] light source"), **with a modulation frequency** (*e.g.*, "modulat[ed] with a period on the order of some multiple of the cardiac cycle period"). Lisogurski, 5:25-47, 5:34-36, 6:19-26, 11:38-41, 11:50-54, 21:34-56, 25:49-52. Anthony, ¶¶265-267.

Lisogurski discloses a "cardiac cycle modulation" technique to "generate a light drive signal that varies with a period the same as or closely related to the period of the cardiac cycle." Lisogurski, 25:49-52; *see also* Lisogurski 5:34-36, 6:19-26. The light drive signal—because it "control[s]…the timing of when light source 130 is turned on and off"—then "appl[ies the]…cardiac cycle modulation to [the] light source." Lisogurski, 11:38-41, 11:50-54, 21:34-56. A POSITA would have understood (or at least found obvious) that the light source is modulated to have a period matching the cardiac cycle. Anthony, ¶268. A POSITA would have further understood that because "cardiac cycle modulation may include modulation aligned with pulses of the heart, [or] pulses of a particular muscle group," the resulting modulated light thus includes information regarding pulses of a particular muscle group. Lisogurski, 5:25-47. Anthony, ¶268.

Further to the modification discussed in §IX.B.2, a POSITA would also have

been motivated to combine **Lisogurski's** light drive circuitry and front end processing circuitry such that the front end processing circuitry modulates the light source. **Lisogurski** explicitly discloses altering the functionalities of the front end processing circuitry. Lisogurski, 14:11-14 ("[C]omponents of front end processing circuitry 150 are merely illustrative and any suitable components and combinations of components may be used to perform the front end processing operations."). Further, **Lisogurski** discloses that other aspects of the circuitry made be combined into a single component. Lisogurski, 15:66-16:16 ("…In some embodiments the functionality of some of the components may be combined in a single component…."). Thus, a POSITA would have understood, that because the front end processing circuitry and light drive circuitry already work together to perform certain functions (Lisogurski, 11:41-46), it would have been obvious to combine them. *E.g.*, Ex.1035, 3:36-52, 4:4-18. Anthony, ¶269.

C. Ground 2: Lisogurski in view of Tran (Claims 5, 7)

1. Overview of Tran

Tran discloses a patient monitoring system including a monitoring device, such as a watch, that collects and transmits patient health data to a server, and a statistical analyzer that analyzes the data including pulse oximetry measurements. Tran, 3:6-13, 8:28-53, 9:23-54, 11:1-31, 25:36-43, 26:17-29, 36:62-37:13, 46:25-42, 54:14-57:13, 60:58-61:37, 74:29-67. **Tran's** statistical analyzers can "track the

patient's risk of stroke or heart attack." Tran, 54:35-36, 86:44-87:3. The analyzers use "artificial neural networks," a form of artificial intelligence ("AI"), to help classify potential risks to warn patients or health-care providers. Tran, 22:24-28, 74:45-46, 75:18-20, 94:57-65. The monitoring device can be used with a "smart phone[ ]," which remotely collects and transmits data. Tran, 33:50-34:40. Anthony, ¶¶270-274.

2. Motivation to Combine Lisogurski and Tran

Lisogurski and **Tran** are analogous art, in the same field as the '475—including physiological monitoring—and are reasonably pertinent to the problems addressed by the '475—e.g., improving optical physiological monitoring. '475, 8:39-9:5; Lisogurski, 1:10-11; Tran, 1:10-33, 2:66-67, 4:30-36, 36:62-37:12. Anthony, ¶275.

A POSITA would have looked to **Tran** to "improve how the data obtained by **Lisogurski's** device is stored and analyzed." '484-FWD, 46-47. As the Board also found, **Lisogurski's** system, which includes a sensor, "process[es] its collected data to track patient status," and a POSITA "would have been motivated to seek additional ways to use tracked data, such as pulse oximetry data." '484-FWD, 46-47 (citing '484-Pet., 59); Tran, 22:23-28, 36:62-37:13; Lisogurski, 15:43-65, 18:58-65, 10:48-64. The Board further noted that in looking for ways to improve **Lisogurski's** sensor, a POSITA "would have looked to **Tran**" for "using [an] artificial neural

network to analyze such data and provide warnings." '484-FWD, 46-47 (citing '484, Pet., 59). Indeed, use of AI, including artificial neural networks, to improve the reliability and accuracy of data analysis—particularly in real-time monitoring of physiological data—was well-known in the art. Exs.1048, 95:13-15; 1049, [0148]; 1064, 3:14-16; 1065, 2:25-39. Anthony, ¶¶280-283.

Further, as the Board found in the '484 FWD, a POSITA would have been further motivated to apply Tran's artificial intelligence teachings to **Lisogurski's** sensor. '484-FWD, 46-47 (citing Tran, 22:23-28, 36:62-37:13; '484-Pet. 10-11, 26, 59-60). **Lisogurski** already discloses performing various signal processing operations on signals measured from a subject within a portable monitoring system, including by front end processing circuitry 150 (*i.e.*, processor, §IX.B.3.v.[8.d]). Lisogurski, 11:28-31, 10:42-47, 12:48-49, Fig. 1. As the Board also found in the '533-FWD, **Lisogurski** expressly suggests modifying sensor 102/312 to include the monitor's front end circuitry and related functionalities by teaching "the functionality of some of the components may be combined in a single component," especially when "numerous industry trends motivate the modification.…includ[ing] improving the capabilities of wearable sensors." '533-FWD, 22-23. Accordingly, a POSITA would have recognized the benefit of implementing **Tran's** artificial intelligence to process these signals locally within sensor 102/312, rather than

offloading them to an external system as a means of avoiding latency associated with data transmission and to reduce potential privacy and security risks associated with wirelessly transmission of patient data. Anthony, ¶282. Moreover, the Board also found another reason that a POSITA would have been motivated to modify **Lisogurski's** sensor to include front end processing circuitry 150: because the front end processing circuitry 150 performs analog-to-digital conversion and other initial processing of the signal, the Board also agreed that a POSITA would have understood or at least found it obvious to include it in the detector where the signal is captured, which is on sensor 102/312. *See* '533-FWD, 23 (citing '533-Pet., 47-48). Indeed, it was common and advantageous for a detector to include a front end processing circuitry. *E.g.*, Exs.1034, 2:66-4:20, Figs. 7-8 (photodetector with signal processing capability); 1033, [0052], Fig. 4 (showing front end analog signal conditioning circuitry 330 in sensor 300); Anthony, ¶282. And, it was also common and advantageous for a sensor to have AI functionalities internally. *E.g.*, Ex.1044 8:3-11, 45:65-46:12. Anthony, ¶¶280-283.

A POSITA would have been motivated to also apply **Tran's** teaching of a smart phone in implementing **Lisogurski's** monitor 104/314. Anthony, ¶¶260-262. **Tran** explicitly discloses a "smart phone[]." Tran, 34:4-25. And, as the Board noted, a POSITA would have found it obvious to use "Tran's smartphone…in place

of Lisogurski's monitoring device, which Lisogurski describes as a computing device that is portable, battery powered, and has a touchscreen," especially because "Tran teaches using a smartphone with a portable, wearable sensor to send data to remote devices and other monitoring devices, facilitating the detection of emergencies in a manner consistent with the use of smartphones and tablets." '484-FWD, 47-48 (citing '484-Pet. at 60-61 (citing Tran 33:58-34:40)). Anthony, ¶¶276-278.

A POSITA would have had a reasonable expectation of success in applying **Tran's** teaching to **Lisogurski's** sensor. Both references teach optical physiological measurement devices and techniques. *E.g.*, Lisogurski, 1:10-11; Tran, 36:62-37:12. A POSITA would have understood that **Tran's** data analysis techniques such as the use of AI were well-known in the art and easily implemented and/or applied to **Lisogurski's** sensor 102/312 with front end processing circuitry. *E.g.*, Ex.1044, 8:3-11, 45:6-11, 45:65-46:12; Anthony, ¶282. A POSITA would have also understood that **Tran's** smartphone would be used for the same purpose as **Lisogurski's** monitor. Anthony, ¶278. Thus, a POSITA would have known such a combination (yielding the claimed limitations) would predictably work and provide the expected functionality. Anthony, ¶¶279, 284.

3. Claim limitations

a. [5] "The apparatus of claim 1, wherein the apparatus further comprises a processor configured to be coupled to a non-transitory computer readable medium, and wherein the apparatus including the processor is configured to use artificial intelligence in making decisions associated with at least a portion of the output signal."

See §§IX.B.3.a-o.[1.pre]-[1.n]. **Lisogurski** in view of **Tran** renders obvious [5]. '484-FWD, 48-49. **Lisogurski discloses the apparatus** (*e.g.*, "sensor"; §IX.B.3.a.[1.pre]) **further comprises a processor** (*e.g.*, "front end processing circuitry 150"; §IX.B.3.v.[8.d]) **configured to be coupled to a non-transitory computer readable medium** (*e.g.*, a memory)**, and wherein the apparatus** (*e.g.*, "sensor"; §IX.B.3.a.[1.pre]) **including the processor** (*e.g.*, "front end processing circuitry 150"; §IX.B.3.v.[8.d]). Lisogurski, 12:42-50, 14:56-15:18. Anthony, ¶¶286-288.

Lisogurski discloses that "front end processing circuitry 150" "perform[s] various analog and digital processing" of "the output signal of detector 104." Lisogurski, 12:42-50. As discussed above (§IX.B.3.v.[8.d]), a POSITA would have understood (or at least found it obvious) that **Lisogurski's** front end processing circuitry is a processor. A POSITA would have also understood (or at least found obvious) that the processor performing the functions of front end processing circuitry 150 includes a memory. Anthony, ¶289. Indeed, **Lisogurski** discloses that

its back end processing circuitry includes a "processor" coupled to "memory," which includes "any suitable computer-readable media capable of storing information that can be interpreted by [a] processor" and used to perform signal processing operations. Lisogurski, 14:56-15:18. Thus, a POSITA would have understood (or at least found it obvious), that **Lisogurski's** front end processing circuitry, which also performs various signal processing, would include memory. Anthony, ¶289.

To meet "the wearable device **is configured to use artificial intelligence in making decisions associated with at least a portion of the output signal**" ('484 claims 2/18), the Board relied on **Tran's** disclosure of "feeding data from a wearable patient monitoring device such as those disclosed by Lisogurski, to a statistical analyzer, such as Tran's neural network, which is a form of artificial intelligence," and **Tran's** further disclosure of "analy[zing] patient data [to] flag potentially dangerous conditions that can be specified as an event or pattern that can harm the patient." '484-FWD, 48-49 (citing '484-Pet., 61 (citing Tran, 3:6-13, 9:23-54, 11:6-30, 22:24-30, 85:60-61, 87:33-37, 88:48-50, 90:58-61)). Anthony, ¶¶290-291.

As discussed above (§IX.C.2), the Board found that a POSITA would have been motivated to apply **Tran's** teachings of an AI-driven statistical analyzer to **Lisogurski's** sensor 102/312 to advantageously improve analysis of the collected

physiological measurement data. Anthony, ¶292.

b. [7] "The apparatus of claim 6, wherein the apparatus is further configured to communicate with a smart phone or a tablet, the smart phone or the tablet comprising a wireless receiver, a wireless transmitter, a display, a speaker, a voice input module, one or more buttons or knobs, a microprocessor, and a touch screen."

See §IX.B.3.p.[6]. As discussed (§IX.B.3.q.[7]), **Lisogurski** teaches and at least renders obvious [7]. Anthony, ¶¶296-298.

To the extent additional disclosure is required for the "smart phone or tablet" limitation, Tran discloses a smart phone (e.g., "smart phone"). As the Board already found, **Tran** discloses using a "smartphone with a portable, wearable sensor to send data to remote devices and other monitoring devices," and that a POSITA would have been motivated to apply **Tran's** teaching of a smartphone to **Lisogurski** to "facilitate[e] the detection of emergencies in a manner consistent with the use of smartphones and tablets" and would have had a reasonable expectation of success in doing so, as the Board also already found. '484-FWD, 47-48 (citing '484-Pet., 60-61 (citing Tran, 33:58-34:40)). *See also* §§IX.B.2, IX.C.2. Anthony, ¶299.

D. Grounds 3-4: Lisogurski in view of LeBoeuf (Claims 6-7)

1. Overview of LeBoeuf

LeBoeuf discloses various interchangeable embodiments of a light guiding

earbud including "one or more sensor modules that includes one or more sensors for sensing physiological information" such that "the earbud may function as a physiological monitor." LeBoeuf, [0025], [0026], [0029], [0073]. Anthony, ¶300.

LeBoeuf's "light guiding earbud 30" includes "base 50," "**earbud housing 16** extending outwardly from the base 50 that is configured to be positioned within an ear of a subject, and a cover 18 that surrounds the **earbud housing 16**." LeBoeuf, [0123]. Light guiding earbud 30 also includes "**optical detector[s] 26**" and "**optical emitter[s] 24**" which may be LEDs. LeBoeuf, [0092]. **LeBoeuf** also discloses **optical detectors 26** and **optical emitters 24** disposed in an arc formation. LeBoeuf, FIG. 8B. Anthony, ¶301.

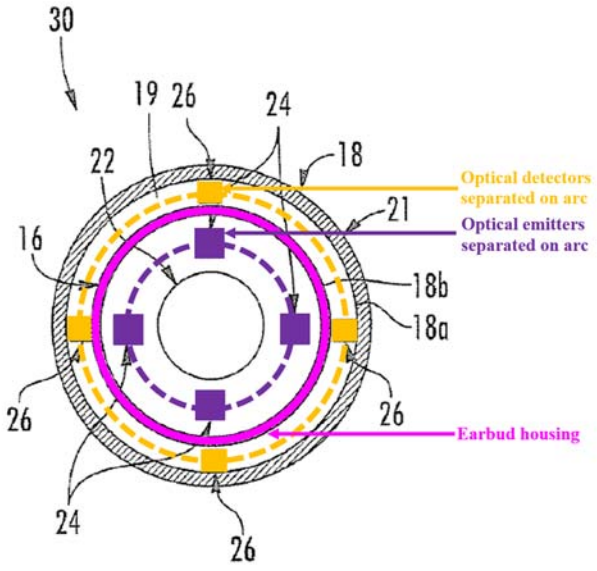

FIG. 8B

2. Motivation to Combine Lisogurski and LeBoeuf

Lisogurski and **LeBoeuf** are in the same field as the '475—which includes physiological monitoring—and are reasonably pertinent to the problems addressed by the '475—e.g., improving optical physiological monitoring. '475, 8:39-9:5; Lisogurski, 1:10-11; LeBoeuf, Abstract, [0025]-[0026]. Anthony, ¶302.

A POSITA would have been motivated to apply **LeBoeuf's** teachings to **Lisogurski's** sensor to include a plurality of semiconductor sources and spatially separated detectors arranged along one or more arcs to increase the accuracy and reliability of physiological measurements. Both **Lisogurski** and **LeBoeuf** disclose physiological monitoring devices that can be worn on various parts of the body including the ear. Lisogurski, 4:6-20; LeBoeuf, [0006], [0010]. Further, **Lisogurski** discloses that "[a]ny suitable configuration of light source 316 and detector 318 may be used," and that "sensor unit 312 may include multiple light sources and detectors, which may be spaced apart." Lisogurski, 17:42-45. **Lisogurski's** sensor emits light into biological tissue, and a POSITA would have understood that light emitted into biological tissue undergoes significant scattering and absorption, and the reflected light exits the tissue at a wide range of angles. *See* Lisogurski, 11:9-27 ("[W]hen more light at a certain wavelength is absorbed or reflected, less light of that wavelength is received from the tissue by detector 140."); Anthony, ¶303. A POSITA would have also recognized that a simply linear or closely grouped detector

arrangement would fail to capture much of the angularly scattered light. Ex.1045 4:14-65; Anthony, ¶304. Accordingly, a POSITA would have been motivated to apply **LeBoeuf's** teaching of spatially separated detectors located on one or more arcs to improve the detection of scattered light from biological tissue, and increase the signal-to-noise ratio of **Lisogurski's** sensor. *See, e.g.*, LeBoeuf, [0105], FIG. 8B. Anthony, ¶¶303-304.

A POSITA would have had a reasonable expectation of success in applying **LeBoeuf's** teaching to **Lisogurski's** sensor. Both references also teach applying these physiological measurement systems to ears, and thus it would have been straightforward and advantageous to apply **LeBoeuf's** earbud sensor teachings to **Lisogurski's** sensor on patients' earlobes, for example. Lisogurski, 4:6-20; LeBoeuf, [0025]-[0026]. Both references teach optical physiological measurement systems including multiple emitters and detectors spaced apart and emitters/light sources directing light towards a subject's tissue. *E.g.*, Lisogurski, 17:37-45; LeBoeuf, [0006], [0123], [0125]. Using different configurations for the light sources and detectors were well-known in the art. *E.g.*, Ex.1045, 4:14-65; Lisogurski, 17:42-45, LeBoeuf, [0124]. Indeed, other than the placement of the detectors and emitters in an arc, no modification to **Lisogurski's** sensor would have been needed. Thus, and a POSITA would have known such a combination (yielding the claimed

limitations) would predictably work and provide the expected functionality. Anthony, ¶305.

LeBoeuf's teaching as applied to the spatial configuration of the light sources and detectors and physical configuration of **Lisogurski's** sensor do not concern the aspects of **Lisogurski's** system (i.e., the monitor and sensor and/or software within the monitor or processing circuitry within sensor) where **Tran's** teaching of artificial intelligence or smartphone would be applicable (§IX.C.2), and the above-discussed motivation and expectation of success would remain the same for **Lisogurski's** system applying **LeBoeuf's** teaching. Anthony, ¶306.

3. Claim Limitations

a. [6] "The apparatus of claim 1, wherein the plurality of light emitting diodes comprises six light emitting diodes, and wherein the detection system comprises the plurality of detectors arranged along an arc."

See §§IX.B.3.a-o.[1.pre]-[1.n]. As discussed (§IX.B.3.p.[6]), **Lisogurski** teaches or at least renders obvious [6]. **To the extent additional disclosure is required, LeBoeuf discloses the plurality of semiconductor sources** (*e.g.*, "optical emitters 24" that are "light-emitting diode[s]") **and the plurality of detectors** (*e.g.*, "optical detectors 26") **arranged along an arc** (*e.g.*, spatially separated in an arc). LeBoeuf, [0048]-[0050], [0092], [0123], FIGS. 8A-8B. Anthony, ¶¶308-311.

LeBoeuf discloses a light guiding earbud 30 including a base 50, with a plurality of optical emitters 24, including LEDs, spatially separated in an arc on the base 50 and a plurality of optical detectors 26 spatially separated in another arc on the base 50. [0048]-[0050], [0092], [0123], FIGS. 8A-8B. Anthony, ¶¶312-313.

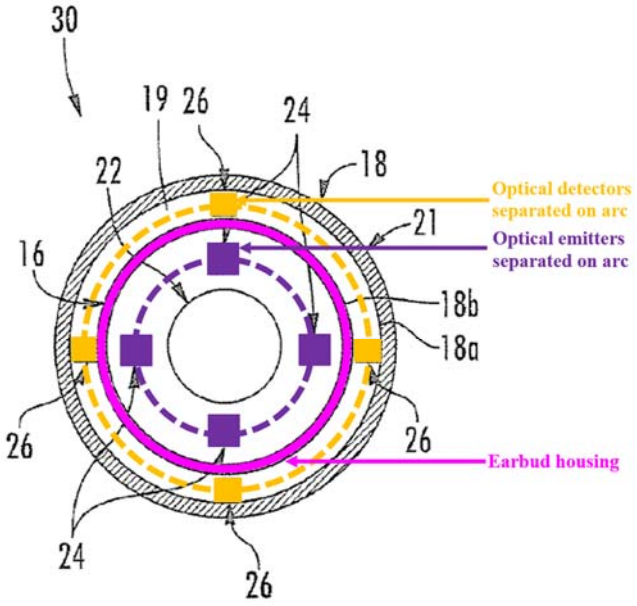

FIG. 8B

As discussed (§IX.D.2), a POSITA would have been motivated to apply **LeBoeuf's** arc arrangements to **Lisogurski's** sensor to improve accuracy of the measurement. Anthony, ¶314.

b. [7] "The apparatus of claim 6, wherein the apparatus is further configured to communicate with a smart phone or a tablet, the smart phone or the tablet comprising a wireless receiver, a wireless transmitter, a display, a speaker, a voice input module, one or

> **more buttons or knobs, a microprocessor, and a touch screen."**

See §IX.D.3.a.[6]. **Lisogurski** and/or **Tran** meets [7] for the reasons discussed in [7] in Grounds 1 and 2. *See* §§IX.B.3.q.[7], IX.C.3.b.[7]. Anthony, ¶¶317-319.

E. Grounds 5-8: Grounds 1-4 in further view of Carlson (claims 1, 5-8, 11-13)

1. Overview of Carlson

Carlson discloses an "optical pulsoximetry [device] for non-invasive measurement of pulsation and oxygen saturation in arterial human or animal blood." Carlson, [0002]; *see also* Carlson, [0033], [0049], Fig. 2. Anthony, ¶320.

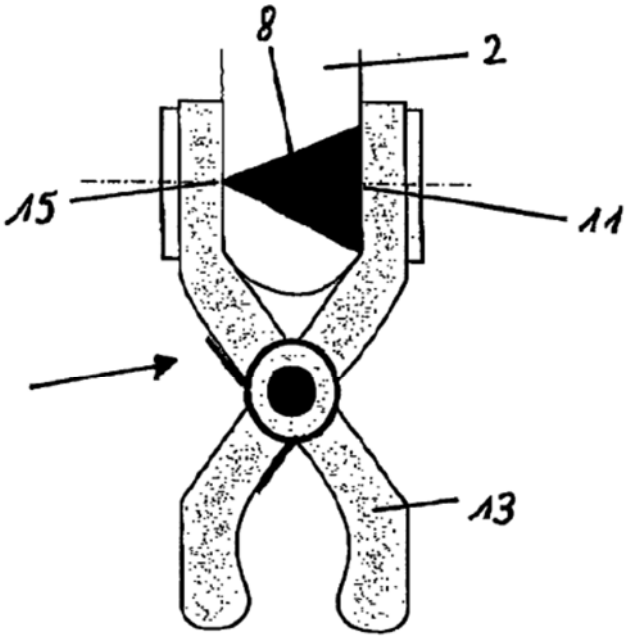

Figure 2

Carlson's ear clip sensor 1 includes light source 15, which transmits light beam 8 through a patient's earlobe 2, and light detector 11 to detect the transmitted light. Carlson, [0049]. Light source 15 emits light at two wavelengths, 660 and 890nm, and includes two LEDs. Carlson, [0050]. "[L]ight is emitted from the two LEDs 15 and is shaped by the two beam shaping elements or lenses 21 to be guided as beams 12 through the earlobe 2." Carlson, [0062]. '533-FWD, 18-20. Anthony, ¶321.

Carlson teaches that patient mobility can cause "signal instability and insufficient robustness versus environmental disturbances" including ambient light, such as sunlight, that "influenc[es] the measurement of the pulsoximeter sensor." Carlson, [0004], [0068]. **Carlson** teaches using a "beam-shaping element," such as lens, to direct the LED light source into tissue "to increase the optical signal power, detected by the pulsoximeter sensor, and thus increasing the Signal/Noise—and signal/Background ratio" by "a factor of 5." Carlson, [0014]. '533-FWD, 18-20. Anthony, ¶322.

2. Motivation to Combine

Like **Lisogurski**, **LeBoeuf**, and **Tran, Carlson** is analogous art, in the same field as the '475—including physiological monitoring—and is reasonably pertinent to the problems addressed by the '475—e.g., improving optical physiological monitoring. *See* §§IX.C.2, IX.D.2; Lisogurski, 9:46-60, 14:40-55, 26:5-14; Carlson, [0002], [0004], [0006]-[0008], [0010], [0054]. Anthony, ¶323.

As the Board found, "a [POSITA] would have incorporated Carlson's lenses 21 into Lisogurski's wireless sensor 102/312 to increase its optical signal power and signal-to-noise ratio without increasing its actual power." '533-FWD, 37. As the Board explained, **Carlson's** lenses 21 "increase the optical signal power without increasing the actual power used by the system," thereby "increasing the Signal/Noise...ratio" and "Lisogurski teaches the importance of both reducing power consumption and increasing signal-to-noise ratio" such that a POSITA "would have incorporated Carlson's lenses 21 into Lisogurski's wireless sensor 102/312 to increase its optical signal power and signal-to-noise ratio without increasing its actual power." '533-FWD, 37; Carlson, [0010], [0014]; Lisogurski, 14:40-55, 37:6-20; *see also* '484-FWD, 23, 26-27. Anthony, ¶¶324-326.

A POSITA would have had a reasonable expectation of success in applying **Carlson's** teaching to **Lisogurski's** sensor. Both **Lisogurski** and **Carlson** teach optical physiological measurement systems utilizing LEDs as light sources, and using lenses to focus the light of LEDs was well-known in the art, such that a POSITA would have found it routine, straightforward, and advantageous to apply **Carlson's** lenses to **Lisogurski's** optical physiological measurement. Ex.1038, 765; Lisogurski, 1:10-11, 17:37-45, 10:48-56; Carlson, [0014], [0054]. Anthony, ¶327. Thus, a POSITA would have known such a combination (yielding the claimed

limitations) would predictably work and provide the expected functionality. Anthony, ¶327.

Carlson's teaching concerns the mechanisms within **Lisogurski's** light source, **LeBouef's** teaching concerns the spatial configuration of the light sources and detectors (§IX.D.2), and **Tran's** teachings as applied to **Lisogurski** concern the monitor and/or software within the sensor (§IX.C.2), such that the above-discussed motivations and reasonable expectation of success would remain the same for **Lisogurski's** system alone or in view of **LeBoeuf** and/or **Tran**. Anthony, ¶328.

3. Claim limitations

a. [1.e], [1.f], [8.b], [8.d]

As discussed (§§IX.B.3.f-g.[1.e]-[1.f], IX.B.3.t.[8.b], IX.B.3.v.[8.d]), **Lisogurski** teaches and at least renders obvious the "lens"/"lenses" limitations in [1.e], [1.f], [8.b], and [8.d]. Anthony, ¶¶329-330.

To the extent additional disclosure is required for the "lens" limitations, as the Board already found, Carlson discloses the wearable device (*e.g.*, "ear clip" "pulse oximetry" device) **comprising one or more lenses** (*e.g.*, "lenses 21") **configured to receive at least a portion of the output optical light and to deliver a lens output light to tissue** (*e.g.*, "light…is shaped by…lenses 21 to be guided as beams 12 through the earlobe 2"). Carlson, [0002], [0010], [0013]-[0014], [0024], [0035], [0049], [0054], [0062]; Fig. 4. As found in the '484 and '533-IPRs, **Carlson**

discloses lenses 21 that "can be diffractive or refractive and direct the emitted optical radiation into human or animal tissue." '484-FWD, 23, 26-27 (citing '484-Pet., 31-33 (citing Carlson [0010], [0013]-[0014], [0024], [0054], [0062], Fig. 4); '533-FWD, 36-37; *see also* Carlson, [0002], [0035]. The Board further found a POSITA would have been motivated to apply **Carlson's** lens teachings to **Lisogurski** to increase optical signal power and signal-to-noise ratio without increasing its actual power. '484-FWD, 23 (citing '484-Pet., 32-33 (citing Carlson [0014], [0024], [0062] and Lisogurski, 6:3-6, 9:49-60, 13:60-14:10, 14:40-55, 37:6-20). The same finding would apply to **Lisogurski** alone, or in view of **LeBoeuf** and/or **Tran.** §IX.E.2. Anthony, ¶¶331-336**.**

X. SECONDARY CONSIDERATIONS

There is no evidence in the '475's prosecution history or elsewhere supporting any secondary considerations arguments, or evidence of nexus to any challenged Claim. *See generally* '475FH; Anthony, ¶337. Indeed, as demonstrated by the prior art referenced herein, any purported solutions to problems or unexpected results in the '475 were already well-known. Anthony, ¶337.

To the extent that PO contends that the accused products in the Texas Case are infringing and thus demonstrate commercial success, any such conclusory allegations would fail to provide any indication that the Claims are non-obvious. Such conclusory assertions would not demonstrate that Petitioners' products

infringe, let alone show any nexus between any alleged commercial success and the Claims, or that any alleged success is due to an allegedly claimed component instead of the many unclaimed features of the accused products.

To the extent PO asserts the existence of any secondary considerations in its responses, Petitioners reserve the right to address any such evidence. Anthony, ¶338.

XI. CONCLUSION

Substantial, new, and noncumulative technical teachings have been presented for each Challenged Claim, which are rendered obvious for the reasons set forth above. Anthony, ¶¶68-336. There is a reasonable likelihood Petitioners will prevail as to each of these Claims. *Inter partes* review of Claims 1, 5-8, and 11-13 of the ’475 is accordingly requested.

Dated: August 5, 2025

Respectfully submitted,

By: /*James L. Davis, Jr.*/
Name: James L. Davis, Jr.
Registration No. 57,325
ROPES & GRAY LLP

Lead Counsel for Petitioners

CERTIFICATE OF COMPLIANCE

Pursuant to 37 C.F.R. § 42.24(a) and (d), the undersigned hereby certify that the Petition for *Inter Partes* Review complies with the type-volume limitation of 37 C.F.R. § 42.24(a)(1)(i) because, exclusive of the exempted portions, it contains 13,968 words as counted by the word processing program used to prepare the paper.

Dated: August 5, 2025

Respectfully submitted,

By: /*James L. Davis, Jr.*/
Name: James L. Davis, Jr.
Registration No. 57,325
ROPES & GRAY LLP

Lead Counsel for Petitioners

CERTIFICATE OF SERVICE

I hereby certify that on August 5, 2025, I caused a true and correct copy of the foregoing Petition for *Inter Partes* Review of U.S. Patent No. 12,268,475 and supporting exhibits to be served via Federal Express on the Patent Owner at the following correspondence address of record as listed on Patent Center:

109543 - Brooks, Kushman P.C./Cheetah Omni MedSci
150 W 2nd St., Suite 400N
Royal Oak, MI 48067
UNITED STATES

———

A courtesy copy was also sent via electronic mail to Patent Owner's litigation counsel at the following addresses:

William E. Davis III
bdavis@davisfirm.com
DAVIS FIRM, PC

Daniel S. Stringfield
dstringfield@nixonpeabody.com
Timothy P. Maloney
tmaloney@nixonpeabody.com
Daniel D. Georgiev
dgeorgiev@nixonpeabody.com
Peter Krusiewicz
pkrusiewicz@nixonpeabody.com
NIXON PEABODY LLP

Corey T. Leggett

cleggett@nixonpeabody.com
NIXON PEABODY LLP

Elizabeth M. Chiaviello
echiaviello@nixonpeabody.com
Benjamin R. Holt
bholt@nixonpeabody.com
NIXON PEABODY LLP

Dated: August 5, 2025

By: /*James L. Davis, Jr.*/
Name: James L. Davis, Jr.
Registration No. 57,325
Lead Counsel for Petitioners