US009055868B2

(12) **United States Patent**
Islam

(10) **Patent No.: US 9,055,868 B2**
(45) **Date of Patent: Jun. 16, 2015**

(54) **SYSTEM AND METHOD FOR VOICE CONTROL OF MEDICAL DEVICES**

(71) Applicant: **Omni MedSci, Inc.**, Ann Arbor, MI (US)

(72) Inventor: **Mohammed N. Islam**, Ann Arbor, MI (US)

(73) Assignee: **OMNI MEDSCI, INC.**, Ann Arbor, MI (US)

(*) Notice: Subject to any disclaimer, the term of this patent is extended or adjusted under 35 U.S.C. 154(b) by 0 days.

(21) Appl. No.: **14/476,082**

(22) Filed: **Sep. 3, 2014**

(65) **Prior Publication Data**

US 2014/0371555 A1 Dec. 18, 2014

Related U.S. Application Data

(60) Continuation of application No. 14/186,814, filed on Feb. 21, 2014, which is a continuation of application No. 13/913,678, filed on Jun. 10, 2013, now Pat. No. 8,848,282, which is a continuation of application No.

(Continued)

(51) **Int. Cl.**
H01S 3/30 (2006.01)
A61B 5/00 (2006.01)
(Continued)

(52) **U.S. Cl.**
CPC ***A61B 5/0075*** (2013.01); ***H01S 3/302*** (2013.01); ***A61B 5/1455*** (2013.01);
(Continued)

(58) **Field of Classification Search**
CPC H01S 3/302; A61B 5/0013; A61B 5/0075; A61B 5/7264; A61B 5/7445; A61B 5/02042; A61B 5/742; A61B 5/749
USPC 367/334
See application file for complete search history.

(56) **References Cited**

U.S. PATENT DOCUMENTS

3,744,712 A 7/1973 Papadopoulos et al.
4,063,106 A 12/1977 Ashkin et al.
(Continued)

FOREIGN PATENT DOCUMENTS

EP 1148666 10/2001
WO WO8705727 3/1987
(Continued)

OTHER PUBLICATIONS

Sun, Y., C.F. Booker, S. Kumari, R.N. Day, M. Davidson, A. Periasamy, "Characterization of an orange acceptor fluorescent protein for sensitized spectral fluorescence resonant energy transfer microscopy using a white-light laser," Journal of Biomedical Optics, vol. 14, No. 5, paper 054009 (2009).
(Continued)

Primary Examiner — Mark Hellner
(74) *Attorney, Agent, or Firm* — Brooks Kushman P.C.

(57) **ABSTRACT**

A diagnostic system includes a plurality of semiconductor diodes, a multiplexer, and one or more waveguide structures to form an output beam. A lens system communicates some of the output beam onto a part of a user's body comprising blood to perform a measurement. A software application is capable of generating data based at least in part on the measurement, and it operates on a control system that may have a touch-screen, a proximity sensor, and a wireless transceiver to transmit wireless data over a wireless link. A host comprises a digital file, control logic at the host to process at least the portion of the wireless data to generate a status of the user, a memory storage device for recording the status, and an output for communicating at least a portion of the status or associated information over a communication link to one or more remote display output devices.

20 Claims, 7 Drawing Sheets

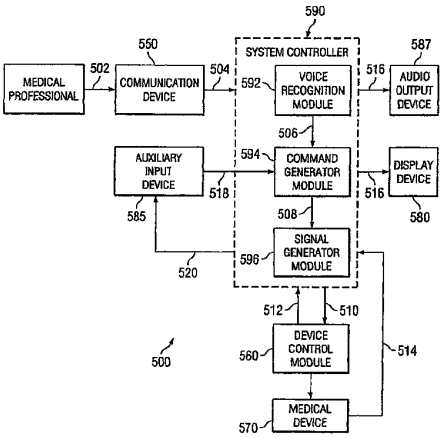

Related U.S. Application Data

13/531,853, filed on Jun. 25, 2012, now Pat. No. 8,679,011, which is a continuation of application No. 13/349,244, filed on Jan. 12, 2012, now Pat. No. 8,472,108, which is a continuation of application No. 13/078,547, filed on Apr. 1, 2011, which is a division of application No. 12/625,253, filed on Nov. 24, 2009, now Pat. No. 8,098,423, which is a division of application No. 12/206,432, filed on Sep. 8, 2008, now Pat. No. 7,633,673, which is a division of application No. 10/812,608, filed on Mar. 30, 2004, now Pat. No. 7,433,116, which is a continuation of application No. 10/757,341, filed on Jan. 13, 2004, now Pat. No. 7,259,906, which is a continuation of application No. 10/652,276, filed on Aug. 29, 2003, now abandoned.

(60) Provisional application No. 60/408,025, filed on Sep. 3, 2002.

(51) **Int. Cl.**

A61B 5/1455	(2006.01)
A61B 5/02	(2006.01)
A61B 5/021	(2006.01)
A61B 5/024	(2006.01)

(52) **U.S. Cl.**

CPC ***A61B 5/0013*** (2013.01); ***A61B 5/02042*** (2013.01); ***A61B 5/021*** (2013.01); ***A61B 5/14551*** (2013.01); ***A61B 5/7264*** (2013.01); ***A61B 5/7445*** (2013.01); ***A61B 5/749*** (2013.01); ***A61B 5/0022*** (2013.01); ***A61B 5/024*** (2013.01); ***A61B 5/742*** (2013.01)

(56) **References Cited**

U.S. PATENT DOCUMENTS

4,158,750	A	6/1979	Sakoe et al.
4,221,997	A	9/1980	Flemming
4,275,266	A	6/1981	Lasar
4,374,618	A	2/1983	Howard
4,403,605	A	9/1983	Tanikawa
4,462,080	A	7/1984	Johnstone et al.
4,516,207	A	5/1985	Moriyama et al.
4,523,884	A	6/1985	Clement et al.
4,605,080	A	8/1986	Lemelson
4,641,292	A	2/1987	Tunnell et al.
4,704,696	A	11/1987	Reimer et al.
4,728,974	A	3/1988	Nio et al.
4,762,455	A	8/1988	Coughlan et al.
4,776,016	A	10/1988	Hansen
4,860,763	A	8/1989	Schminke
4,867,442	A	9/1989	Matthews
4,958,910	A	9/1990	Taylor et al.
4,989,253	A	1/1991	Liang et al.
5,078,140	A	1/1992	Kwoh
5,084,880	A	1/1992	Esterowitz et al.
5,086,401	A	2/1992	Glassman et al.
5,134,620	A	7/1992	Huber
5,142,930	A	9/1992	Allen et al.
5,180,378	A	1/1993	Kung et al.
5,191,628	A	3/1993	Byron
5,218,655	A	6/1993	Mizrahi
5,230,023	A	7/1993	Nakano
5,267,256	A	11/1993	Saruwatari et al.
5,267,323	A	11/1993	Kimura
5,300,097	A	4/1994	Lerner et al.
5,303,148	A	4/1994	Mattson et al.
5,305,427	A	4/1994	Nagata
5,313,306	A	5/1994	Kuban et al.
5,323,404	A	6/1994	Grubb
5,345,538	A	9/1994	Narayannan et al.
5,400,165	A	3/1995	Gnauck et al.
5,408,409	A	4/1995	Glassman et al.
5,458,122	A	10/1995	Hethuin
5,544,654	A	8/1996	Murphy et al.
5,572,999	A	11/1996	Funda et al.
5,598,849	A	2/1997	Browne
5,617,871	A	4/1997	Burrows
5,631,758	A	5/1997	Knox et al.
5,676,138	A	10/1997	Zawilinski
5,687,734	A	11/1997	Dempsey et al.
5,695,493	A	12/1997	Nakajima et al.
5,696,778	A	12/1997	MacPherson
5,704,351	A	1/1998	Mortara et al.
5,718,234	A	2/1998	Warden et al.
5,747,806	A	5/1998	Khalil
5,748,103	A	5/1998	Flach et al.
5,792,204	A	8/1998	Snell
5,812,978	A	9/1998	Nolan
5,855,550	A	1/1999	Lai et al.
5,862,803	A	1/1999	Besson et al.
5,867,305	A	2/1999	Waarts et al.
5,906,581	A	5/1999	Tsuda
5,912,749	A	6/1999	Harstead et al.
5,944,659	A	8/1999	Flach et al.
5,950,629	A	9/1999	Taylor et al.
5,957,854	A	9/1999	Besson et al.
5,970,457	A	10/1999	Brant et al.
6,013,007	A	1/2000	Root et al.
6,014,249	A	1/2000	Fermann et al.
6,043,927	A	3/2000	Islam
6,115,673	A	9/2000	Malin
6,185,535	B1	2/2001	Hedin et al.
6,193,631	B1	2/2001	Hickman
6,198,394	B1	3/2001	Jacobsen et al.
6,200,309	B1	3/2001	Rice et al.
6,224,542	B1	5/2001	Chang et al.
6,246,707	B1	6/2001	Yin et al.
6,246,896	B1	6/2001	Dumoulin
6,273,858	B1	8/2001	Fox et al.
6,278,975	B1	8/2001	Brant et al.
6,281,471	B1	8/2001	Smart
6,285,897	B1	9/2001	Kilcoyne
6,289,238	B1	9/2001	Besson et al.
6,292,688	B1	9/2001	Patton
6,301,271	B1	10/2001	Sanders et al.
6,301,273	B1	10/2001	Sanders et al.
6,333,803	B1	12/2001	Kurotori et al.
6,337,462	B1	1/2002	Smart
6,340,806	B1	1/2002	Smart et al.
6,350,261	B1	2/2002	Domankevitz et al.
6,364,834	B1	4/2002	Reuss et al.
6,374,006	B1	4/2002	Islam et al.
6,381,391	B1	4/2002	Islam et al.
6,402,691	B1	6/2002	Peddicord et al.
6,407,853	B1	6/2002	Samson et al.
6,436,107	B1	8/2002	Wang et al.
6,441,747	B1	8/2002	Khair et al.
6,442,430	B1	8/2002	Ferek-Petric
6,443,890	B1	9/2002	Schulze et al.
6,450,172	B1	9/2002	Hartlaub et al.
6,453,201	B1	9/2002	Daum et al.
6,454,705	B1	9/2002	Cosentino et al.
6,458,120	B1	10/2002	Shen et al.
6,462,500	B1	10/2002	L'Hegarat et al.
6,463,361	B1	10/2002	Wang et al.
6,463,385	B1	10/2002	Fry
6,480,656	B1	11/2002	Islam et al.
6,512,936	B1	1/2003	Monfre
6,534,012	B1	3/2003	Hazen et al.
6,549,702	B2	4/2003	Islam et al.
6,567,431	B2	5/2003	Tabirian et al.
6,585,622	B1	7/2003	Shum et al.
6,587,702	B1	7/2003	Ruchti
6,603,910	B2	8/2003	Islam et al.
6,605,038	B1	8/2003	Teller et al.
6,605,080	B1	8/2003	Altshuler et al.
6,611,643	B2	8/2003	Birk
6,625,180	B2	9/2003	Bufetov et al.
6,631,025	B2	10/2003	Islam et al.
6,640,117	B2	10/2003	Makarewicz

(56) **References Cited**

U.S. PATENT DOCUMENTS

6,659,947	B1	12/2003	Carter et al.
6,659,999	B1	12/2003	Anderson et al.
6,701,271	B2	3/2004	Willner et al.
6,738,652	B2	5/2004	Mattu
6,760,148	B2	7/2004	Islam
6,773,922	B2	8/2004	Jeng
6,788,965	B2	9/2004	Ruchti
6,802,811	B1	10/2004	Slepian
6,816,241	B2	11/2004	Grubisic
6,847,336	B1	1/2005	Lemelson
6,864,978	B1	3/2005	Hazen
6,868,285	B2	3/2005	Muller-Dethlefs
6,885,498	B2	4/2005	Islam
6,885,683	B1	4/2005	Fermann et al.
6,943,936	B2	9/2005	Islam et al.
6,990,364	B2	1/2006	Ruchti
7,010,336	B2	3/2006	Lorenz
7,027,467	B2	4/2006	Baev et al.
7,060,061	B2	6/2006	Altshuler et al.
7,133,710	B2	11/2006	Acosta
7,167,300	B2	1/2007	Fermann et al.
7,209,657	B1	4/2007	Islam
7,233,816	B2	6/2007	Blank
7,236,618	B1	6/2007	Chui et al.
7,259,906	B1	8/2007	Islam
7,263,288	B1	8/2007	Islam
7,294,105	B1	11/2007	Islam
7,299,080	B2	11/2007	Acosta
7,317,938	B2	1/2008	Lorenz
7,395,158	B2	7/2008	Monfre
7,433,116	B1	10/2008	Islam
7,456,965	B2	11/2008	Wang
7,519,253	B2	4/2009	Islam
7,519,406	B2	4/2009	Blank
7,620,674	B2	11/2009	Ruchti
7,633,673	B1	12/2009	Islam
7,697,966	B2	4/2010	Monfre
7,787,503	B2	8/2010	Wadsworth
7,787,924	B2	8/2010	Acosta
7,789,800	B1	9/2010	Watterson et al.
7,800,818	B2	9/2010	Mattsson
7,807,718	B2	10/2010	Hashim
7,949,017	B2	5/2011	Marciante et al.
8,000,574	B2	8/2011	Buchter
8,098,423	B2	1/2012	Islam
8,145,286	B2	3/2012	Arai
8,472,108	B2	6/2013	Islam
8,679,011	B2 *	3/2014	Islam 600/300
8,848,282	B2 *	9/2014	Islam 359/333
2002/0013518	A1	1/2002	West et al.
2002/0019584	A1	2/2002	Schulze et al.
2002/0032468	A1	3/2002	Hill et al.
2002/0082612	A1	6/2002	Moll et al.
2002/0109621	A1	8/2002	Khair et al.
2002/0111541	A1	8/2002	Bibl et al.
2002/0115914	A1	8/2002	Russ
2002/0128846	A1	9/2002	Miller
2002/0178003	A1	11/2002	Gehrke et al.
2003/0022126	A1	1/2003	Buchalla
2004/0174914	A1	9/2004	Fukatsu
2004/0240037	A1	12/2004	Harter
2005/0111500	A1	5/2005	Harter et al.
2006/0223032	A1	10/2006	Fried
2006/0245461	A1	11/2006	Islam
2006/0268393	A1	11/2006	Islam
2007/0078348	A1	4/2007	Holman
2008/0105665	A1	5/2008	Kondo
2009/0028193	A1	1/2009	Islam
2009/0204110	A1	8/2009	Islam
2010/0046067	A1	2/2010	Fermann et al.
2010/0322490	A1	12/2010	Pan
2010/0331637	A1	12/2010	Ting
2011/0143364	A1	6/2011	Kim
2012/0013722	A1	1/2012	Wong

FOREIGN PATENT DOCUMENTS

WO	WO9749077	6/1997
WO	WO9930613	12/1998
WO	0189362	11/2001
WO	0227640	4/2002
WO	0228123	4/2002

OTHER PUBLICATIONS

Borlinghaus, R., "Colours Count: how the challenge of fluorescence was solved in confocal microscopy," in Modern Research and Educational Topics in Microscopy, A. Mendez-Vilas and J. Diaz, eds, pp. 890-899, Formatex (2007).

Borlinghaus, R., "The White Confocal: Continuous Spectral Tuning in Excitation and Emission," in Optical Fluorescence Microscopy, A. Diaspro (Ed), Chapter 2, pp. 37-54, ISBN 978-3-642-15174-3, Springer-Verlag, Berlin (2011).

Borlinghaus, R.T., L. Kuschel, "White Light Laser: The Ultimate Source for Confocal Microscopy," http://www.leica-microsystems.com/science-lab/white-light-laser (Jun. 27, 2012).

Ziegler, U., A.G. Bittermann, M. Hoechli, "Introduction to Confocal Laser Scanning Microscopy (LEICA)," www.zmb.unizh.ch, May 29, 2013.

Pan, Yingtian, et al., "Hand-held arthroscopic optical coherence tomography for in vivo high-resolution imaging of articular cartilage", Journal of Biomedical Optics 8(4), Oct. 2003, pp. 648-654.

Xie, Tucliang, et al., "Endoscopic optical coherence tomography with a modified microelectromechanical systems mirror for detection of bladder cancers", Applied Optics, vol. 42, No. 31, Nov. 1, 2003, pp. 6422-6426.

Dubois, A., et al., "Three-dimensional cellular-level imaging using full-field optical coherence tomography", Physics in Medicine and Biology, Phys. Med. Biol. 49, 2004, pp. 1227-1234.

Park, Jesung, et al., "Analysis of birefringent image in the retinal nerve fiber layer by polarization sensitive optical coherence tomography", Ophthalmic Technologies XIV, Proceedings of SPIE, vol. 5314, 2004, pp. 188-194.

Unterhuber, A., et al., "Advances in broad bandwidth light sources for ultrahigh resolution optical coherence tomography", Physics in Medicine and Biology, Phys. Med. Biol. 49, 2004, pp. 1235-1246.

Drexler, Wolfgang, "Ultrahigh-resolution optical coherence tomography", Journal of Biomedical Optics, vol. 9, No. 1, Jan./Feb. 2004, pp. 47-74.

Schmitt, Joseph, et al., "Intravascular Optical Coherence Tomography Opens a Window Onto Coronary Artery Disease", Optics & Photonics News, Feb. 2004, pp. 20-25.

Nassif, N.A., et al., "In vivo high-resolution video-rate spectral-domain optical coherence tomography of the human retina and optic nerve", Optics Express, vol. 12, No. 3, Feb. 9, 2004, pp. 367-376.

Choi, Seung-Ho, et al., "Observation of Optical Precursors in Water", Physical Review Letters, vol. 92, No. 19, May 14, 2004, pp. 193903-1-193903-.3.

Pierce, Mark C., et al., "Advances in Optical Coherence Tomography imaging for Dermatology", Optical Coherence Tomography Advances, The Journal of Investigative Dermatology, Sep. 3, 2004, pp. 458-463.

"State-Specific Trends in Chronic Kidney Failure—United States, 1990-2001", Morbidity and Mortality Weekly Report, Department of Health and Human Services Centers for Disease Control and Prevention, vol. 53, No. 39, copied from intemet: file://C:\Documents and Settings\eturlo\Desktop\State-Speciflc Trends in Chronic Kidney . . . Feb. 12, 2010, Oct. 8, 2004, pp. 918-920.

I.B. Ads, A.A.E. Wagie, N.B. Mariun, A.B.E. Jammal, "An Internet-based blood pressure monitoring system for patients," Journal of Telemedicine and Telecare, 2001, pp. 51-53.

R.H. Istepanian, B. Woodward, P.A. Bales, S. Chen, B. Luk, "The comparative performance of mobile telemediCal systems based on the IS-54 and GSM cellular telephone standards," Journal of Telemedicine and Telecare, 1999, pp. 97-104.

Shaw, et al, IR Supercontinuum Generation in As-Se Photonic Crystal Fiber, Optical Society of America, Copyright 2005, 3 pages.

(56) **References Cited**

OTHER PUBLICATIONS

PCT/US06/44451, Notification of Transmittal of the International Search Report and the Written Opinion of the International Searching Authority, or the Declaration, Nov. 29, 2007, 12 pages.
G.S. Edwards et al., "Free-electron-laser-based biophysical and biomedical instrumentation," American Institute of Physics, vol. 74, No. 7, Jul. 2003, pp. 3207-3245.
Computer Motion, Inc., "501(k) Summary-ZEUS® MicroWrist™ Surgical System and Accessories," Sep. 24, 2002, 6 pages.
Computer Motion, Inc. "HERMES™ O.R. Control Cente—510(k) Summary of Safety and Effectiveness," Oct. 11, 2002, 5 pages.
K.M. Joos, et al. "Optic Nerve Sheath Fenestration with a Novel Wavelength Produced by the Free Electron Laser (FEL)," Lasers in Surgery and Medicine, 27: 2000,191-205.
J. Sanghera, I. Aggarwal, "IR Fiber Optics at NRL," undated, 10 pages.
J. Sanghera, L.B. Shaw, I.D. Aggarwal, "Applications of chalcogenide glass optical fibers," Academic of Science, 2003, pp. 1-11.
B. Rigas, P.T.T. Wong, "Human Colon Adenocarcinoma Cell Lines Display Infrared Spectroscopic Features," Cancer Research, Jan. 1, 1992, pp. 84-88.
G. Edwards, et al., "Comparison of OPA and Mark-Ill FEL for Tissue Ablation at 6.45 Microns," Department of Physics and Free Electron Laser Laboratory, Duke University, 2002, 7 pages.
Glenn Edwards, "Biomedical and potential clinical applications for pulsed lasers operating near 6.45 um," Society of Photo-Optical Instrumentation Engineers, 1995, 2 pages.
Passat, "Solid-State Lasers and Optical Components," Jul. 14, 2003, 5 pages.
P.A. Thielen and L.B. Shaw, et al., "Small-core As-Se fiber for Raman amplification," Optics Leti-Ers, vol. 28, No. 16, Aug. 15, 2003, 3 pages.
R.Rox Anderson, et al., "Selective Photothermolysis: Precise Microsurgery by Selective Absorption of Pulsed Radiation," Department of Dermatology, Harvard Medical School, Science, vol. 220, Apr. 29, 1983, 4 pages.
U.S. Appl. No. 10/652,276, "System and Method for Voice Control of Medical devices," by Mohammed N. Islam, abandoned (074036.0129) filed, Aug. 29, 2003.
U.S. Appl. No. 10/757,341, "System and Method for Voice Control of Medical devices," by Mohammed N. Islam, issued (074036.0132) filed, Jan. 13, 2004.
U.S. Appl. No. 12/206,432, "System and Method for Voice Control of Medical Devices," by Mohammed N. Islam, pending (074036.0154) filed, Sep. 8, 2008.
U.S. Patent and Trademark Office, Office Action for U.S. Appl. No. 12/206,432, filed Sep. 8, 2008, Mohammed N, Islam, Date filed: Mar. 12, 2009.
U.S. Patent and Trademark Office, Notice of Allowance and Fee(s) Due for U.S. Appl. No. 12/206,432, filed Sep. 8, 2008, Mohammed N. Islam, Date filed: Aug. 28, 2009.
Hori, Takashi, et al., "Flatly broadened, wideband and low noise supercontinuum generation in highly nonlinear hybrid fiber", Optics Express, vol. 12, No. 2, Jan. 26, 2004, pp. 317-324.
Wadsworth, W. J., et al., "Supercontinuum and four-wave mixing with Q-switched pulses in endlessly single-mode photonic crystal fibres", Optics Express, vol. 12, No. 2, Jan. 26, 2004, pp. 299-309.
Hilligsoe, Karen Marie, et al., "Supercontinuum generation in a photonic crystal fiber with two zero dispersion wavelengths", Optics Express, vol. 12, No. 6, Mar. 22, 2004, pp. 1045-1054.
Venugopalan, V., "Optical Society of America BIOMED Topical Meeting Tutorial on Tissue Optics", Apr. 27, 2004, pp. 1-32.
Slusher, Richart E., et al., "Large Raman gain and nonlinear phase shifts in high-purity As2So3 chalcogenide fibers", J. Opt. Soc. Am. B, vol. 21, No. 6, Jun. 2004, pp. 1146-1155.
Leon-Saval, S. G., et al., "Supercontinuum generation in submicron fibre waveguides", Optics Express, vol. 12, No. 13, Jun. 28, 2004, pp. 2864-2869.
Nicholson, J. W., et al., "High power, single mode, all-fiber source of femtosecond pulses at 1550 nm and its use in supercontinuum generation", Optics Express, vol. 12, No. 13, Jun. 28, 2004, pp. 3025-3034.
Genty, G., et al., "Enhanced bandwidth of supercontinuum generated m microstructured fibers", Optics Express, vol. 12, No. 15, Jul. 26, 2004, pp. 3471-3480.
Champert, Pierre-Alain, et al., "White-light supercontinuum generation in normally dispersive optical fiber using original multi-wavelength pumping system", Optics Express, vol. 12, No. 19, Sep. 20, 2004, pp. 4366-4371.
Nicholson, J. W., "Supercontinuum generation in ultraviolet-irradiated fibers", Optics Letters, vol. 29, No. 20, Oct. 15, 2004, pp. 2363-2365.
Hori, Takashi, et al., "Experimental and numerical analysis of widely broadened supercontinuum generation in highly nonlinear dispersion-shifted fiber with a femtosecond pulse", J. Opt. Soc. Am. B, vol. 21, No. 11, Nov. 2004, pp. 1969-1980.
Demircan, Ayhan, et al., "Supercontinuum generation by the modulation instability", Optics Communications 244, 2005, pp. 181-185.
Papernyi, S. B., et al., "Sixth-Order Cascaded Raman Amplification", OFC/NFOEC, 2005, 3 pages.
Tanaka, Keiji, "Optical nonlinearity in photonic glasses", Journal of Materials Science: Materials in Electronics 16, 2005, pp. 633-643.
Westbrook, Paul S., "Improved Supercontinuum Generation Through UV Processing of Highly Nonlinear Fibers", Journal of Lightwave Technology, vol. 23, No. 1, Jan. 2005, pp. 13-18.
Abeeluck, Akheelesh K., et al., "Continuous-wave pumping in the anomalous- and normal dispersion regimes of nonlinear fibers for supercontinuum generatfon", Optics Letters, vol. 30, No. 1, Jan. 1, 2005, pp. 61-63.
Kutz, J. Nathan, et al., Enhanced Supercontinuum Generation through Dispersion-Management, Optics Express, vol. 13, No. 11, May 30, 2005, pp. 3989-3998.
Lee, Ju Han, et al., "Experimental performance comparison for various continuous-wave supercontinuum schemes: ring cavity and single pass structures", Optics Express, vol. 13, No. 13, Jun. 27, 2005, pp. 4848-4853.
Saliminia, A., et al., "Ultra-broad and coherent white light generation in silica glass by focused femtosecond pulses at 1.5pm", Optics Express, vol. 13, No. 15, Jul. 25, 2005, pp. 5731-5738.
Takushima, Yuichi, High average power, depolarized super-continuum generation using a 1.55-um ASE noise source, Optics Express, vol. 13, No. 15, Jul. 25, 2005, pp. 5871.-5877.
Travers, J. C., et al., "Extended continuous-wave supercontinuum generation in a low-water-loss holey fiber", Optics Letters, vol. 30, No. 15, Aug. 1, 2005, pp. 1938-1940.
Kobtsev, Serguei M., et al., "Modelling of high-power supercontinuum generation in highly nonlinear, dispersion shifted fibers at CW pump", Optics Express, vol. 13, No. 18, Sep. 5, 2005, pp. 6912-6918.
Falk, Peter, et al., "Supercontinuum generation in a photonic crystal fiber with two zero-dispersion wavelengths tapered to normal dispersion at all wavelengths", Optics Express, vol. 13, No. 19, Sep. 19, 2005, pp. 7535-7540.
Tombelaine, Vincent, et al., "Ultra wide band supercontinuum generation in air-silica holey fibers by SHG-induced modulation instabilities", Optics Express, vol. 13, No. 19, Sep. 19, 2005, pp. 7399-7404.
Lee, Ju Han, et al., "Continuous-wave supercontinuum laser based on an erbium-doped fiber ring cavity incorporating a highly nonlinear optical fiber", Optics Letters, vol. 30, No. 19, Oct. 1, 2005, pp. 2599-2601.
Genty, G., et al., "Supercontinuum generation in large mode-area microstructured fibers", Optics Express, vol. 13, No. 21, Oct. 17, 2005, pp. 8625-8633.
Schreiber, T., et al., "Supercontinuum generation by femtosecond single and dual wavelength pumping in photonic crystal fibers with two zero dispersion wavelengths", Optics Express, vol. 13, No. 23, Nov. 14, 2005, pp. 9556-9569.
Travers, J. C., et al., "Extended blue supercontinuum generation in cascaded holey fibers", Optics Letters, vol. 30, No. 23, Dec. 1, 2005, pp. 3132-3134.

(56) **References Cited**

OTHER PUBLICATIONS

Hagen, C. L., et al., "Generation of a Continuum Extending to the Midinfrared by Pumping ZBLAN Fiber With an Ultrafast 1550-nm Source", IEEE Photonics Technology Letters, vol. 18, No. 1, Jan. 1, 2006, pp. 91-93.
Moon, Sucbei, et al., "Generation of octave-spanning supercontinuum with I550-nm amplified diode-laser pulses and a dispersion-shifted fiber", Optics Express, vol. 14, No. 1, Jan. 9, 2006, pp. 270-278.
Fedotova, O., et al., "Supercontinuum generation in planar rib waveguides enabled by anomalous dispersion", Optics Express, vol. 14, No. 4, Feb. 20, 2006, pp. 1512-1517.
Aaviksoo, J., et al., "Observation of optical precursors at pulse propagation in GaAs", Physical Review A, vol. 44, No. 9, Nov. 1, 1991, pp. R5353-R5356.
Boppart, Stephen A., et al., "Imaging developing neural morphology using optical coherence tomography", Journal of Neuroscience Methods 70, 1996, pp. 65-72.
Boppart, Stephen A., et al., "Noninvasive assessment of the developing Xenopus cardiovascular system using optical coherence tomography", Prec. Natl. Acad. Sci. USA, vol. 94, Apr. 1997, pp. 4256-4261.
Tearney, Guillermo J., et al., "In vivo Endoscopic Optical Biopsy with Optical Coherence Tomography", Science, New Series, vol. 276, Jun. 27, 1997, pp. 2037-2039.
de Boer, Johannes F., et al., "Imaging thermally damaged tissue by polarization sensitive optical coherence tomography", Optics Express 212, vol. 3, No. 6, Sep. 14, 1998, pp. 212-218.
Roggan, Andre, et al., "Optical Properties of Circulating Human Blood in the Wavelength Range 400-2500 NM", Journal of Biomedical Optics, vol. 4, No. 1, Jan. 1999, pp. 36-46.
de Boer, Johannes F., et al., "Determination of the depth-resolved Stokes parameters of light backscattered from turbid media by use of polarization-sensitive optical coherence tomography", Optics Letters, vol. 24, No. 5; Mar. 1, 1999, pp. 300-302.
Rollins, Andrew M., et al., "Real-time in vivo imaging of human gastrointestinal ultrastructure by use of endoscopic optical coherence tomography with a novel efficient interferometer design", Optics Letters, vol. 24, No. 19, Oct. 1, 1999, pp. 1358-1360.
D'Amico, Anthony V., et al., "Optical Coherence Tomography As a Method for Identifying Benign and Malignant Microscopic Structures in the Prostate Gland", Basic Science, Urology 55 (5), 2000, pp. 783-787.
Li, Xingde, et al., "Imaging needle for optical coherence tomography", Optics Letters, vol. 25, No. 20, Oct. 15, 2000, pp. 1520-1522.
Oughstun, Kurt E., "Influence of precursor fields on ultrashort pulse autocorrelation measurements and pulse width evolution", Optics Express, vol. 8, No. 8, Apr. 9, 2001, pp. 481-491.
Kowalevicz, Andrew M., et al., "Ultrahigh resolution optical coherence tomography using a superluminescent light source" Optics Express 349, vol. 10, No. 7, Apr. 8, 2002, pp. 349-353.
Povazay, B., et al., "Submicrometer axial resolution optical coherence tomography", Optics Letters, vol. 27, No. 20, Oct. 15, 2002, pp. 1800-1802.
Xie, T.-Q., et al., "Detection of tumorigenesis in urinary bladder with optical coherence tomography: optical characterization of morphological changes", Optics Express, vol. 10, No. 24, Dec. 2, 2002, 2003, pp. 1431-1443.
Seefeldt, Michael, et al., "Compact white-light source with an average output power of 2.4 Wand 900 nm spectral bandwidth", Optics Communications 216, pp. 199-202.
Wang, Yimin, et al., "Ultrahigh-resolution optical coherence tomography by broadband continuum generation from a photonic crystal fiber", Optics Letters, vol. 28, No. 3, Feb. 1, 2003, pp. 182-184.
Bizheva, K, et al., "Compact, broad-bandwidth fiberlaserforsub-2-pm axial resolution optical coherence tomography in the 1300-nm wavelength region," Optics Letters, vol. 28, No. 9, May 1, 2003, pp. 707-709.
Hazen, K.H., M.A. Arnold, G.W. Small, "Measurement of glucose and other analytes in undiluted human serum with near-infrared transmission spectroscopy," Analytica Chimica Acta, vol, 371, pp. 255-267 (1998).
Malin, S.F., T.L. Ruchti, T.B. Blank, S.N. Thennadil, S.L. Monfre, "Noninvasive prediction of glucose by near-infrared diffuse reflectance spectroscopy," Clinical Chemistry, vol. 45, No. 9, pp. 1651-1658 (1999).
Thennadil, S.N., J.L. Rennert, B.J. Wenzel, K.H. Hazen, T.L. Ruchti, M.B. Block, "Comparison of glucose concentration in interstitial fluid, and capillary and venous blood during rapid changes in blood glucose levels," Diabetes Technology & Therapeutics, vol. 3, No. 3, pp. 357-365 (2001).
Troy, T.L., S.N. Thennadil, "Optical properties of human skin in the near infrared wavelength range of 1000 to 2200nm," Journal of Biomedical Optics, vol. 6, No. 2, pp. 167-176, (2001).
Blank, T.B., T.L. Ruchti, A.D. Lorenz, S.L. Monfre, M.R. Makarewicz, M. Mattu, K.H. Hazen, "Clinical results from a non-invasive blood glucose monitor," Optical Diagnostics and Sensing of Biological Fluids and Glucose and Cholesterol Monitoring II, A.V. Priezzhev and G.L. Cote, Editors, Proceedings of SPIE, vol. 4624, pp. 1019 (2002).
Yeh, S-J, C.F. Hanna, O.S. Khalil, "Monitoring blood glucose changes in cutaneous tissue by temperature-modulated localized reflectance measurements," Clinical Chemistry, vol. 49, No. 6, pp. 924-934 (2003).
Marbach, R., T. Koschinsky, F.A. Gries, H.M. Heise, "Noninvasive blood glucose assay by near-infrared diffuse reflectance spectroscopy of the human inner lip," Applied Spectroscopy, vol. 47, No. 7, pp. 875-881 (1993).
Enejder, A.M.K., T.G. Scecina, J. Oh, M. Hunter, W.C. Shih, S. Sasic, G.L. Horowitz, M.S. Feld, "Raman spectroscopy for noninvasive glucose measurements," Journal of Biomedical Optics, vol. 10, No. 3, 031114 (2005).
Olesberg, J.T., L. Liu, V.V. Zee, M.A. Arnold, "In vivo near-infrared spectroscopy of rat skin tissue with varying blood glucose levels," Analytic Chemistry, vol. 78, No. 1, pp. 215-223 (2006).
Olesberg, J.T., M.A. Arnold, C. Mermelstein, J. Schmitz, J. Wagner, "Tunable laser diode system for noninvasive blood glucose measurements," Applied Spectroscopy, vol. 59, No. 12, pp. 1480-1484 (2005).
Harman-Boehm, I. A. Gal, A.M. Raykhman, J.D. Zahn, E. Naidis, Y. Mayzel, "Noninvasive glucose monitoring: a novel approach," Journal of Diabetes Science and Technology, vol. 3, No. 2 pp. 253-260 (2009).
Kim-K.D. G.S. Son, S.S. Lim, S.S. Lee, "Measurement of glucose level exploiting a relative optical absorption at discrete probe wavelengths," Japanese Journal of Applied Physics, vol. 48, 077001 (2009).
Smith, J.L., "The Pursuit of Noninvasive Glucose: Hunting the Deceitful Turkey," 2nd Edition, pp. 1-141 (2011).
Pezzaniti, J.L., T.W. Jeng, L. McDowell, G.M. Oosta, "Preliminary investigation of near-infrared spectroscopic measurements of urea, creatinine, glucose, protein and ketone in urine," Clinical Biochemistry, vol. 34, pp. 239-246 (2001).
Lussi, A., R. Hibst, R. Paulus, "Diagnodent: An optical method for caries detection," Journal of Dental Research, vol. 83, special issue C, pp. C80-C83 (2004).
Reese, E.L, E.E. Fisher, D.A. Horowitz, "Photoelectric densitometry of the circulation of the human dental pulp," The Journal of the Baltimore College of Dental Surgery, vol. 26, No. 1, pp. 6-18 (1971).
Zakian, C., I. Pretty, R. Ellwood, "Near-infrared hyperspectral imaging of teeth for dental caries detection," Journal of Biomedical Optics, vol. 16, No. 6, 064047 (2009).
Belikov, A.V., A.V. Skripnik, K.V. Shatilova, "Study of the dynamics of the absorption spectra of human tooth enamel and dentine under heating and ablation by submillisecond pulse radiation of an erbium laser with a generation wavelength of 2.79 um," Optics and Spectroscopy, vol. 109, No. 2, pp. 211-216 (2010).
Karlsson, L. "Caries detection methods based on changes in optical properties between healthy and carious tissue," International Journal of Dentistry, vol. 2010, Article ID 270729, 9 pages (2010).

(56) **References Cited**

OTHER PUBLICATIONS

Fried, D. M. Staninec, C.L. Darling, "Near-infrared imaging of dental decay at 1310nm," Journal of Laser Dentistry, vol. 18, No. 1, pp. 8-16 (2010).
Burmen, M. P. Usenik, A. Fidler, F. Pernus, B. Likar, "A construction of standardized near infrared hyper-spectral teeth database—a first step in the development of reliable diagnostic tool for quantification and early detection of caries," Lasers in Dentistry XVII, edited by P. Rechmann, D. Fried, Proceedings of SPIE, vol. 7884, Paper 78840E (2011).
Maia, A., L. Karlsson, W. Margulis, A. Gomes, "Evaluation of two imaging techniques: near-infrared transillumination and dental radiographs for the detection of early approximal enamel caries," Dentomaxillofacial Radiology, vol. 40, pp. 429-433 (2011).
Chung, S., D. Fried, M. Staninec, C.L. Darling, "Multispectral near-IR reflectance and transillumination imaging of teeth," Biomedical Optics Express, vol. 2, No. 10, pp. 2804-2814 (2011).
Chung, S., D. Fried, M. Staninec, C.L. Darling, "Near infrared imaging of teeth at wavelengths between 1200 and 1600nm," Proceedings of the Society of Photo Optical Instrument Engineering, paper 7884 (2011).
Staninec, M., S.M. Douglas, C.L. Darling, K. Chan, H. Kang, R. C. Lee, D. Fried, "Nondestructive clinical assessment of occlusal caries lesions using near-IR imaging methods," Lasers in Surgery and Medicine, vol. 43, No. 10, pp. 951-959 (2011).
Nishizawa, N., "Generation and application of high-quality supercontinuum sources," Optical Fiber Technology, vol. 18, pp. 394-402 (2012).
Istepanian, Robert H., "The Comparative Performance of Mobile Telemedical Systems based on the IS-54 and GSM Cellular Telephone Standards"; Journal of Telemedicine and Telecare 1999; pp. 97-104.
Aris, Ishak Bin, "An Internet-Based Blood Pressure Monitoring System for Patients"; Journal of Telemedicine and Telecare 2001; pp. 51-53.
Islam, M. N., et al., "Broad bandwidths from frequency-shifting solitons in fibers", Optics Letters, vol. 14, No. 7, Apr. 1, 1989, pp. 370-372.
Islam, M. N., et al., "Femtosecond distributed soliton spectrum in fibers", J. Opt. Soc. Am. B, vol. 6, No. 6, Jun. 1989, pp. 1149-1158.
Busse, Lynda E., et al., "Design Parameters for Fluoride Multimode Fibers", Journal of Lightwave Technology, vol. 9, No. 7, Jul. 1991, pp. 828-831.
Wuthrich, Stefan, et al., "Optical damage thresholds at 2.94 um in fluoride glass fibers", Applied Optics, vol. 31, No. 27, Sep. 20, 1992, pp. 5833-5837.
Inoue, H., et al., "Computer simulation of the vibrational spectra and properties of fluoride glasses based on ZrF4", Journal of Non-Crystalline Solids, vol. 161, 1993, pp. 118-122.
Mizunami, Toru, et al., "Gain saturation characteristics of Raman amplification in silica and fluoride glass optical fibers", Optics Communications 97, 1993, pp. 74-78.
Desthieux, B., et al., "111 kW (0. 5 mJ) pulse amplification at 1.5 um using a gated cascade of three erbium-doped fiber amplifiers," Appl. Phys. Lett. vol. 63, Aug. 2, 1993, pp. 586-588.
Edwards, Glenn, et al., Tissue ablation by a free-electron laser tuned to the amide II band, Nature, vol. 371, Sep. 29, 1994, pp. 416-419.
Borrelli, N. F., et al., "Resonant and non-resonant effects in photonic glasses", Journal of Non-Crystalline Solids 185, 1995, pp. 109-122.
Asobe, Masaki, et al., "Third-order nonlinear spectroscopy in As2S3 chalcogenide glass fibers", J. Appl. Phys. 77 (11), Jun. 1, 1995, pp. 5518-5523.
Jarman, Richard H., "Novel optical fiber lasers", Current Opinion in Solid State and Materials Science, 1996, pp. 199-203.
Iatridis, James C., et al., "Is the Nucleus Pulposus a Solid or a Fluid? Mechanical Behaviors of the Nucleus Pulposus of the Human Intervertebral Disc", Spine, vol. 21(10), May 15, 1996, pp. 1174-1184.
Asobe, Masaki, "Nonlinear Optical Properties of Chalcogenide Glass Fibers and Their Application to All-Optical Switching", Optical Fiber Technology, vol. 3, Article No. OF970214, 1997, pp. 142-148.
Smektala, F., et al., "Chalcogenide glasses with large non-linear refractive indices", Journal of Non-Crystalline Solids 239, 1998, pp. 139-142.
Hamilton, James D., et al., "High Frequency Ultrasound Imaging with Optical Arrays", IEEE Transactions on Ultrasonics, Ferroelectrics, and Frequency Control, vol. 45, No. 1, Jan. 1998, pp. 216-235.
Hamilton, James D., et al., "High Frequency Ultrasound Imaging Using an Active Optical Detector", IEEE Transactions on Ultrasonics, Ferroelectrics, and Frequency Control, vol. 45, No. 3, May 1998, pp. 719-727.
Nowak, G. A., et al., "Low-power high-efficiency wavelength conversion based on modulational instability in high-nonlinearity fiber," Optics Letters, vol. 23, No. 12, Jun. 15, 1998, pp. 936-938.
Cardinal, T., et al., "Non-linear optical properties of chalcogenide glasses in the system As-S-Se", Journal of Non-Crystalline Solids 256 & 257, 1999, pp. 353-360.
Lucas, Jacques, "Infrared glasses", Current Opinion in Solid State & Materials Science 4, 1999. pp. 181-187.
Sanghera, J. S., et al., Active and passive chalcogenide glass optical fibers for IR applications: a review, Journal of Non-Crystalline Solids 256 & 257, 1999, pp. 6-16.
Nishida, Yoshiki, et al., "Reliability of Fluoride Fiber Module for Optical Amplifier Use", IEEE Photonics Technology Letters, vol. 11, No. 12, Dec. 1999, pp. 1596-1598.
Nowak, George A., et al., "Stable supercontinuum generation in short lengths of conventional dispersion-shifted fiber", Applied Optics, vol. 38, No. 36, Dec. 20, 1999, pp. 7364-7369.
Urban, J. P. G., et al., "The Nucleus of the Intervertebral Disc from Development to Degeneration" Amer. Zool., vol. 40, 2000, pp. 53-61.
Hamilton, James D., et al., "High Frequency Optoacoustic Arrays Using Etalon Detection", IEEE Transactions on Ultrasonics, Ferroelectrics, and Frequency Control, vol. 47, No. 1, Jan. 2000, pp. 160-169.
Ranka, Jinendra K., et al., "Visible continuum generation in air-silica microstructure optical fibers with anomalous dispersion at 800 nm", Optics Letters, vol. 25, No. 1, Jan. 1, 2000, pp. 25-27.
Boult, Maggi, et al., "Systematic Review of Percutaneous Endoscopic Laser Discectomy: Update and Re-appraisal", Australian Safety and Efficacy Register of New Interventional Procedures—Surgical Report No. 5, Feb. 2000, 49 pages.
Boult, Maggi, et aL, "Percutaneous Endoscopic Laser Discectomy", Systematic Review, Aust. N.Z.J. Surg., vol. 70, Apr. 7, 2000, pp. 475-479.
Camacho, Nancy P., et al., "FTIR Microscopic Imaging of Collagen and Proteoglycan in Bovine Cartilage," Biopolymers (Biospectroscopy), vol. 62, 2001, pp. 1-8.
Choi, Joon Y., et al, "Thermal, Mechanical, Optical, and Morphologic Changes in Bovine Nucleus Pulposus Induced by Nd:YAG (• = 1.32 um) Laser Irradiation", Lasers in Surgery and Medicine, vol. 28, 2001, pp. 248-254.
Hafez, M. I., et al., "The Effect of Irrigation on Peak Temperatures in Nerve Root, Dura, and Intervertebral Disc During Laser-Assisted Foraminoplasty", Lasers in Surgery and Medicine, vol. 29, 2001, pp. 33-37.
Jackson, Stuart D., et al., "Theory and numerical simulation of nth-order cascaded Raman fiber lasers", J. Opt. Soc. Am. B, vol. 18, No. 9, Sep. 2001, pp. 1297-1306.
Werle, Peter, et al., "Near- and mid-infrared laser-optical sensors for gas analysis", Optics and Lasers in Engineering 37, 2002, pp. 101-114.
Beck, Mattias, et al., "Continuous Wave Operation of a Mid-Infrared Semiconductor Laser at Room Temperature," SCIENCE vol. 295, www.sciencemag.org, Jan. 11, 2002, pp. 301-305.
Harbold, J. M., et al., "Highly nonlinear As-S-Se glasses for all-optical switching", Optics Letters, vol. 27, No. 2, Jan. 15, 2002, pp. 119-121.

(56) **References Cited**

OTHER PUBLICATIONS

Coen, Stephane, et al., "Supercontinuum generation by stimulated Raman scattering and parametric four-wave mixing in photonic crystal fibers", J. Opt. Soc. Am. B, vol. 19, No. 4, Apr. 2002, pp. 753-764.
Dudley, John M., et al., "Supercontinuum generation in air-silica microstructured fibers with nanosecond and femtosecond pulse pumping", J. Opt. Soc. Am. B, vol. 19, No. 4, Apr. 2002, pp. 765-771.
Harbold, Jeffrey M., et al., "Highly Nonlinear Ge-As-Se and.Ge-As-S-Se Glasses for All-Optical Switching", IEEE Photonics Technology Letters, vol. 14, No. 6, Jun. 2002, pp. 822-824.
Husakou, Anton V., et al, "Supercontinuum generation, four-wave mixing, and fission of higher-order solitons in photonic-crystal fibers", J. Opt. Soc. Am. B, vol. 19, No. 9, Sep. 2002, pp. 2171-2182.
Wadsworth, William J., et al., "Supercontinuum generation in photonic crystal fibers and optical fiber tapers: a novel light source", J. Opt. Soc. Am. B, vol. 19, No. 9, Sep. 2002, pp. 2148-2155.
Kumar, V.V. Ravi Kanth, et al, "Extruded soft glass photonic crystal fiber for ultrabroad supercontinuum generation", Optics Express, vol. 10, No. 25, Dec. 16, 2002, pp. 1520-1525.
Edwards, Glenn S., et al., "Advantage of the Mark-III FEL for biophysical research and biomedical applications", J. Synchrotron Rad. vol. 10, 2003, pp. 354-357.
Nicholson, J. W., et al., "Pulsed and continuous-wave supercontinuum generation in highly nonlinear, dispersion-shifted fibers", Applied Physics B 77, 2003, pp. 211-218.
Sobol, Emil, et al., "Time-resolved, light scattering measurements of cartilage and cornea denaturation due to free electron laser radiation", Journal of Biomedical Optics, vol. 8, No. 2, Apr. 2003, pp. 216-222.
Nicholson, J. W., et al., "All-fiber, octave-spanning supercontinuum", Optics Letters, vol. 28, No. 8, Apr. 15, 2003, pp. 643-645.
Faralli, S., et al., "Impact of Double Rayleigh Scattering Noise in Distributed Higher Order Raman Pumping Schemes", IEEE Photonics Technology Letters, vol. 15, No. 6, Jun. 2003, pp. 804-806.
"New and Emerging Techniques—Surgical, Rapid Review, Laser Discectomy", Australian Safety and Efficacy Register of New Interventional Procedures—Surgical, Jun. 2003, 12 pages.
Avdokhin, A. V., et al, "Continuous-wave, high-power, Raman continuum generation in holey fibers", Optics Letters, vol. 28, No. 15, Aug. 1, 2003, pp. 1353-1355.
Mussot, Arnaud, et al., "Generation of a broadband single-mode supercontinuum in a conventional dispersion-shifted fiber by use of a subnanosecond microchip laser", Optics Letters, vol. 28, No. 19, Oct. 1, 2003, pp. 1820-1822.
Slusher, Richard, et al., "Highly nonlinear composite chalcogenide/polymer fibers", OSA 2004, 1 page.
Thongtrangan, Issada, et al., "Minimally invasive spinal surgery: a historical perspective", Neurosurg. Focus, vol. 16, Article 13, Jan. 2004, pp. 1-10.

* cited by examiner

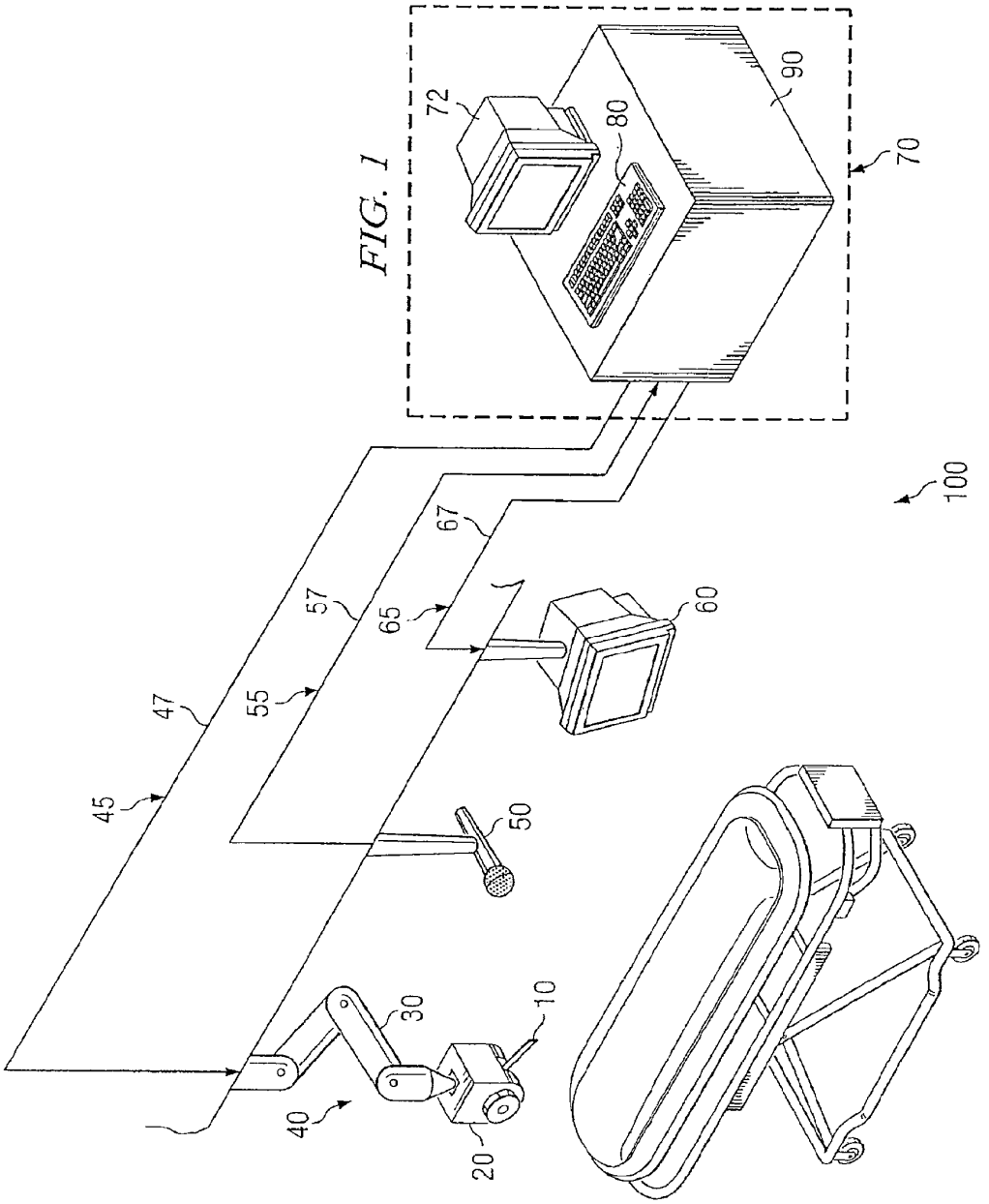
FIG. 1
72
80
90
70
100
67
57
65
60
47
55
45
50
30
10
40
20

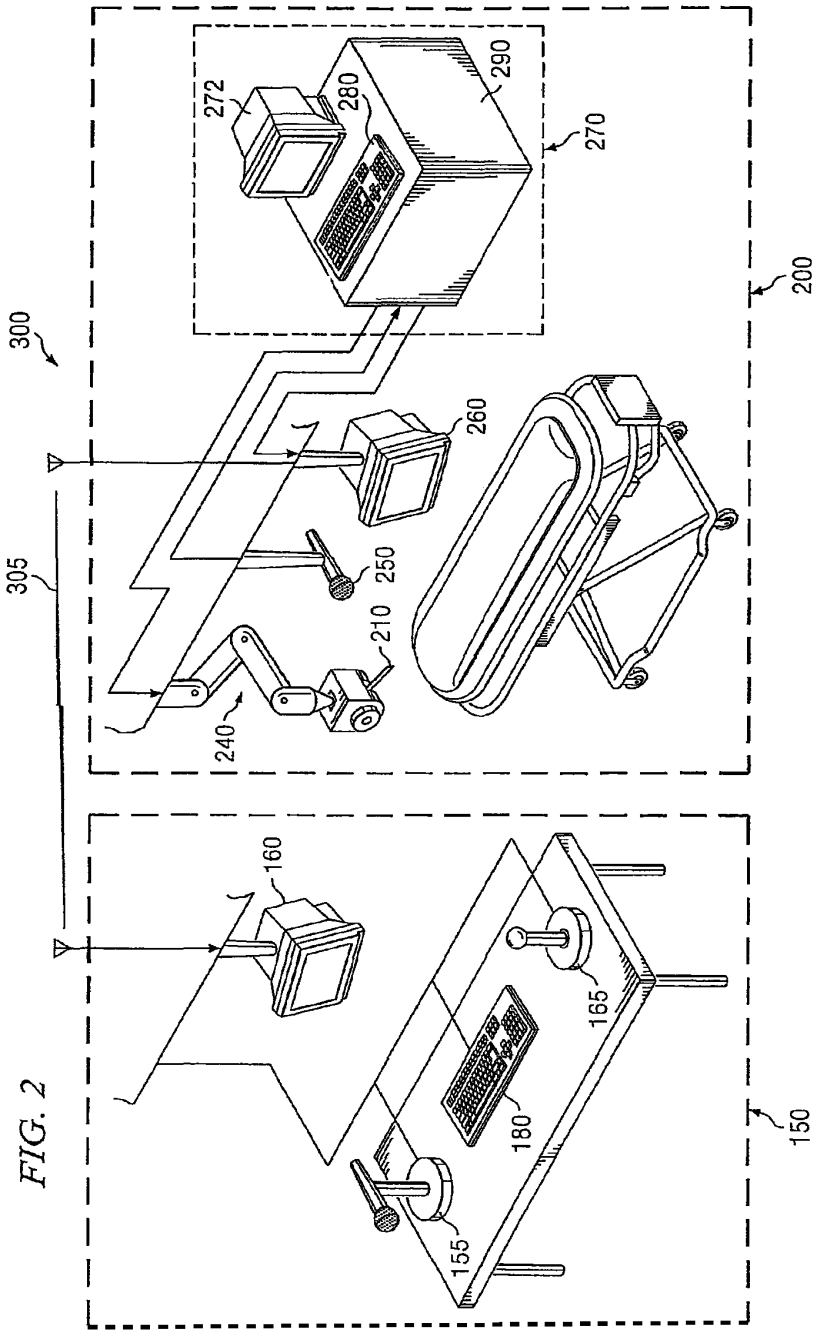

FIG. 2

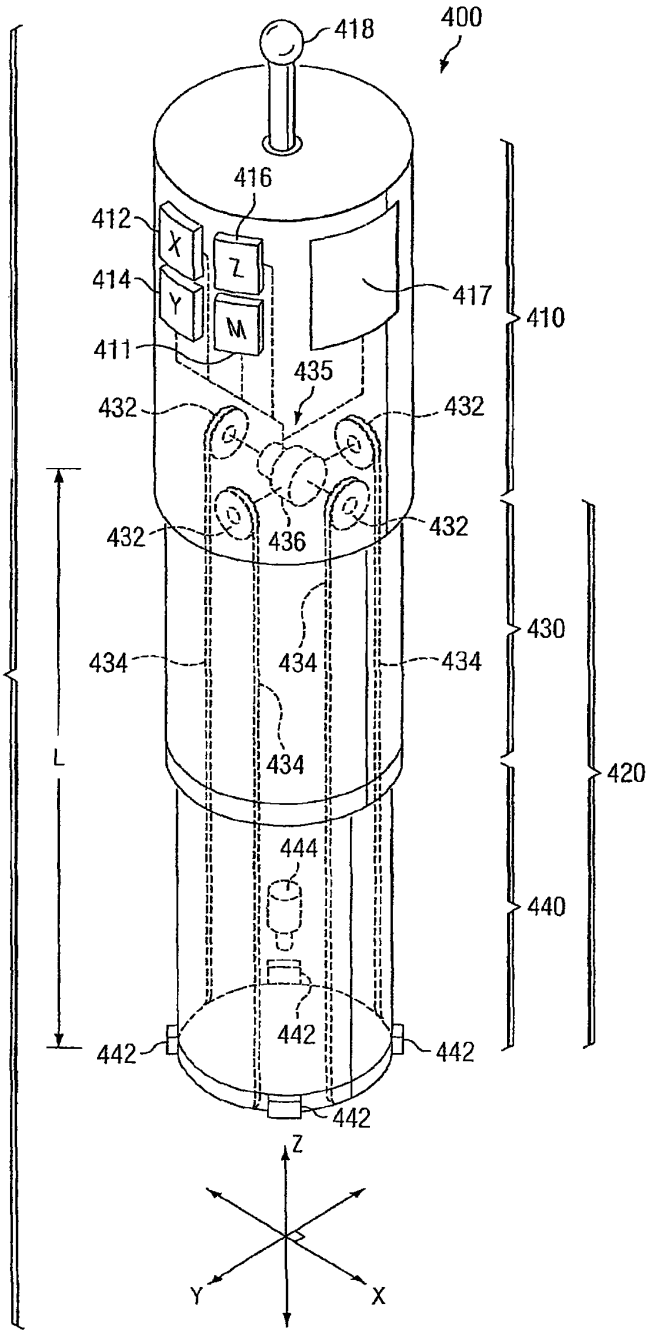
400
418
416
412
414
411
X
Y
Z
M
417
410
435
432
432
432
432
436
430
434
434
434
434
L
420
444
440
442
442
442
442
Z
Y
X

FIG. 3

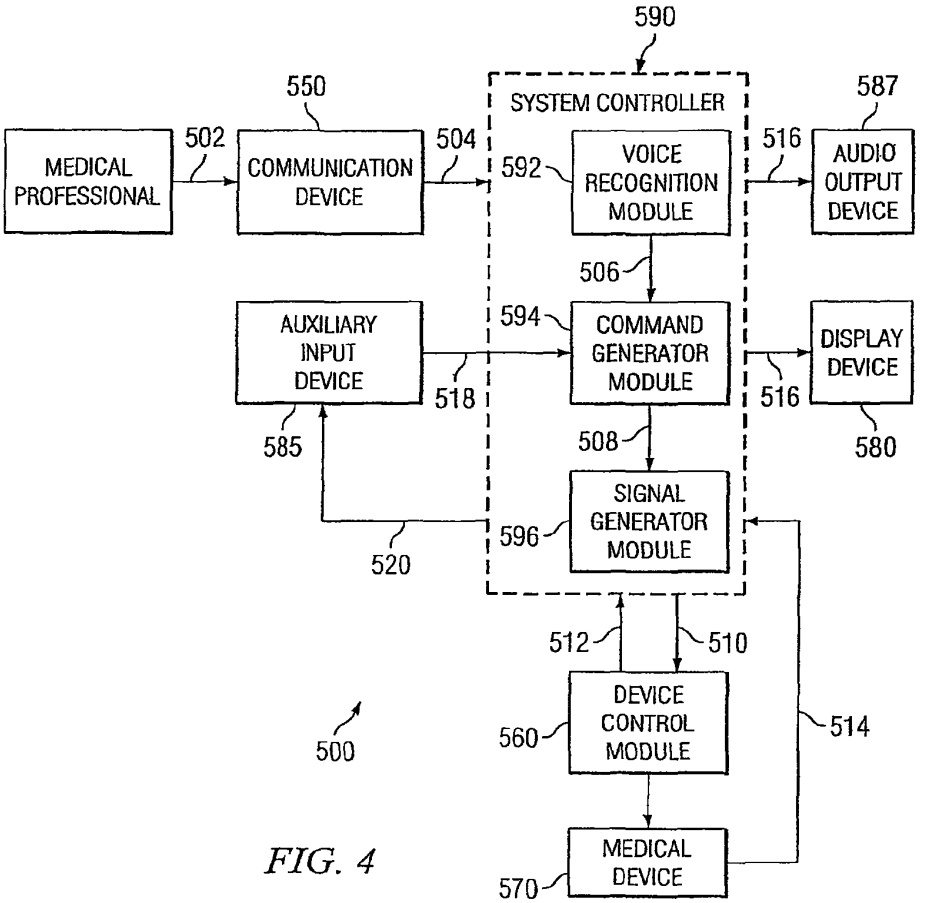
590
SYSTEM CONTROLLER
550
587
MEDICAL PROFESSIONAL
502
COMMUNICATION DEVICE
504
592
VOICE RECOGNITION MODULE
516
AUDIO OUTPUT DEVICE
506
AUXILIARY INPUT DEVICE
594
COMMAND GENERATOR MODULE
DISPLAY DEVICE
518
516
585
508
580
SIGNAL GENERATOR MODULE
596
520
512
510
DEVICE CONTROL MODULE
514
500
560
MEDICAL DEVICE
570

FIG. 4

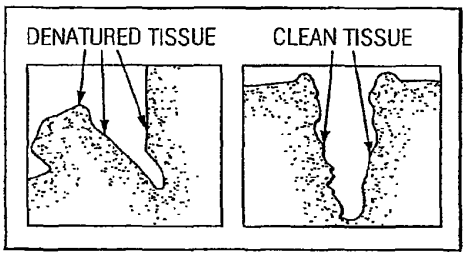
DENATURED TISSUE
CLEAN TISSUE

FIG. 6A

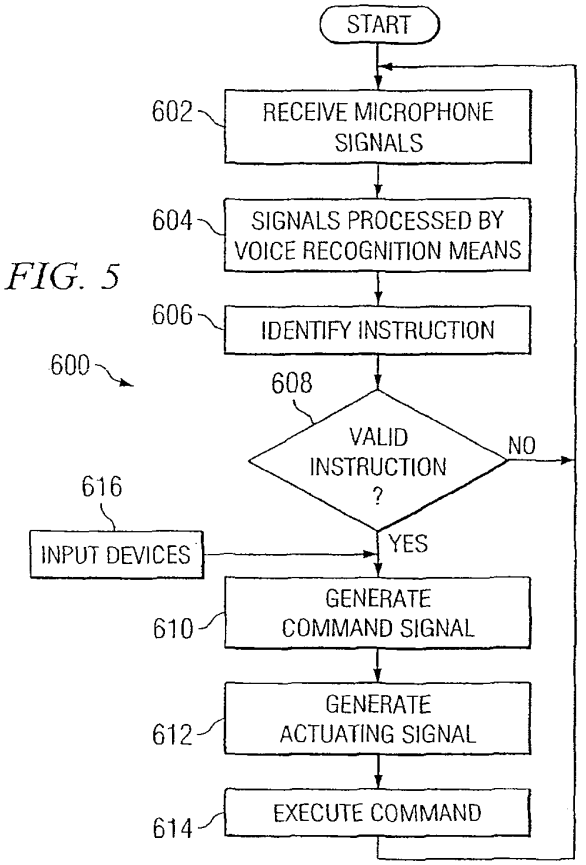
START
602
RECEIVE MICROPHONE SIGNALS
604
SIGNALS PROCESSED BY VOICE RECOGNITION MEANS
606
IDENTIFY INSTRUCTION
600
608
VALID INSTRUCTION ?
NO
616
INPUT DEVICES
YES
610
GENERATE COMMAND SIGNAL
612
GENERATE ACTUATING SIGNAL
614
EXECUTE COMMAND

FIG. 5

FIG. 6B

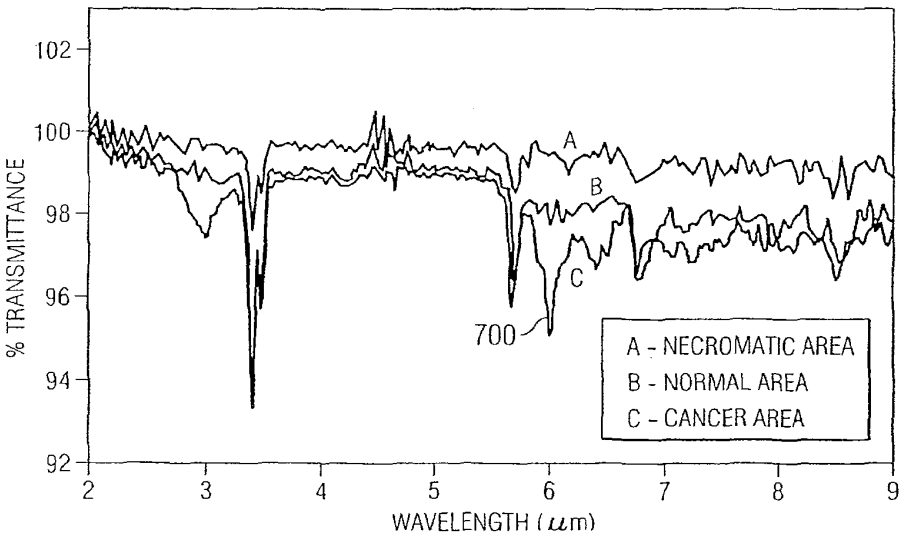
% TRANSMITTANCE
102
100
98
96
94
92
2
3
4
5
6
7
8
9
WAVELENGTH (μm)
A
B
C
700
A - NECROMATIC AREA
B - NORMAL AREA
C - CANCER AREA

FIG. 7

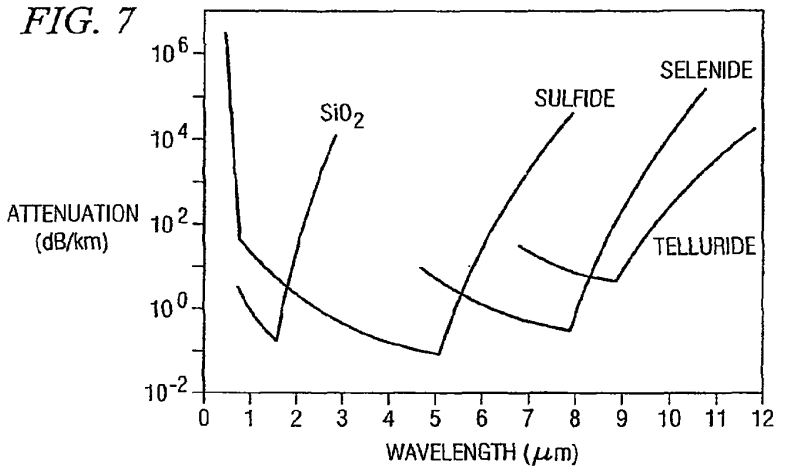

FIG. 8A

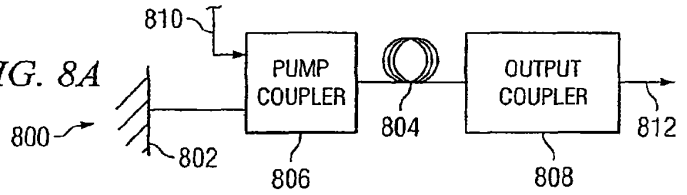

FIG. 8B

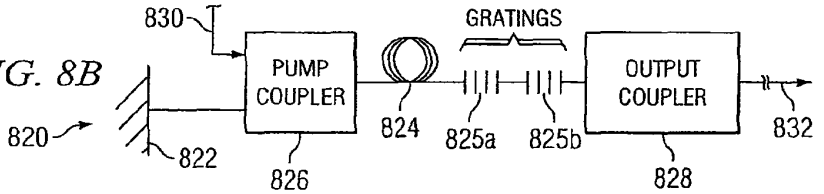

FIG. 8C

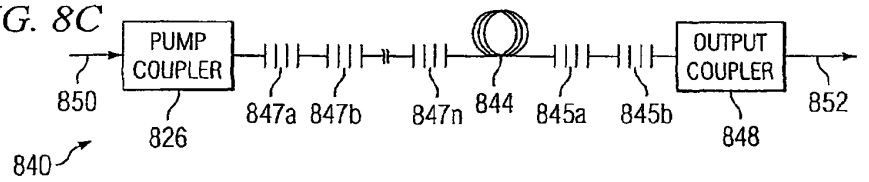

FIG. 8D

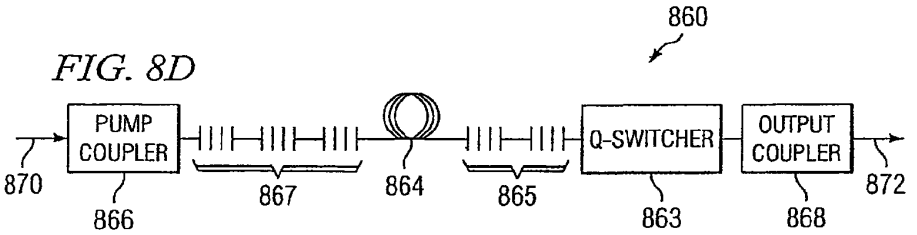

FIG. 9A

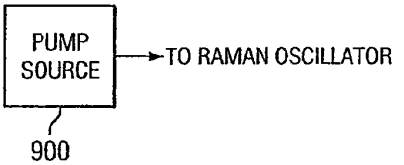

FIG. 9B

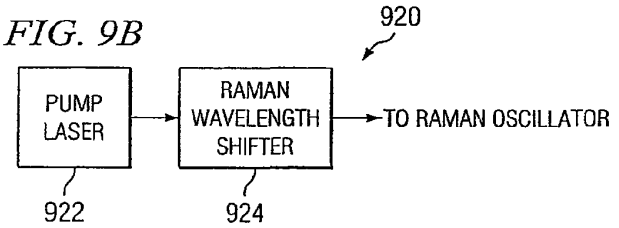

FIG. 9C

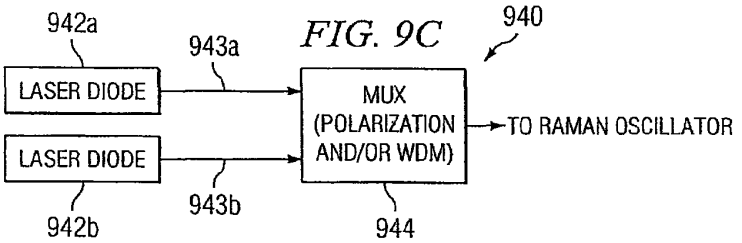

SYSTEM AND METHOD FOR VOICE CONTROL OF MEDICAL DEVICES

CROSS-REFERENCE TO RELATED APPLICATIONS

This application is a continuation of U.S. patent application Ser. No. 14/186,814 filed Feb. 21, 2014, which is a continuation of U.S. patent application Ser. No. 13/913,678 filed Jun. 10, 2013, which is a continuation of U.S. patent application Ser. No. 13/531,853 filed Jun. 25, 2012, which is a continuation of U.S. patent application Ser. No. 13/349,244 filed Jan. 12, 2012 (now U.S. Pat. No. 8,472,108 issued Jun. 25, 2013), which is a continuation of U.S. application Ser. No. 13/078,547 filed Apr. 1, 2011, which is a divisional of U.S. patent application Ser. No. 12/625,253 filed Nov. 24, 2009, now U.S. Pat. No. 8,098,423, issued Jan. 17, 2012, which is a divisional of U.S. patent application Ser. No. 12/206,432, filed Sep. 8, 2008, now U.S. Pat. No. 7,633,673, issued Dec. 15, 2009, which is a divisional of U.S. patent application Ser. No. 10/812,608, filed Mar. 30, 2004, now U.S. Pat. No. 7,433,116, issued Oct. 7, 2008, which is a continuation of U.S. patent application Ser. No. 10/757,341, filed Jan. 13, 2004, now U.S. Pat. No. 7,259,906, issued Aug. 21, 2007, which is a continuation of U.S. patent application Ser. No. 10/652,276 filed Aug. 29, 2003, abandoned. Application Ser. No. 10/652,276 claims the benefit to U.S. Provisional Patent Application No. 60/408,025 filed Sep. 3, 2002, the disclosures of which are incorporated in their entirety by reference herein.

TECHNICAL FIELD

This invention relates generally to medical devices and more particularly to a system and method for voice control of medical devices.

SUMMARY OF EXAMPLE EMBODIMENTS

In one embodiment, a diagnostic system includes a light source comprising a plurality of semiconductor diodes with light beams, a multiplexer capable of combining the plurality of semiconductor diode light beams and generating at least a multiplexed light beam comprising one or more wavelengths, and one or more waveguide structures configured to receive at least a portion of the one or more wavelengths and to communicate at least the portion of the one or more wavelengths to an output end of the one or more waveguide structures to form an output beam. A lens system is configured to receive at least a portion of the output beam and to communicate at least the portion of the output beam onto a part of a user's body comprising blood to perform a measurement on a user. A software application is capable of generating data based at least in part on the measurement on the user, wherein the data represents at least in part physiological information associated with the user, and the software application is capable of operating on a control system adapted to receive, store and process at least a portion of the physiological information. The control system may have a touch-screen, a proximity sensor, and a wireless transceiver to transmit wireless data over a wireless link, the wireless data comprising at least a part of the physiological information, wherein the control system is further capable of receiving voice input signals and manually entered input signals. A host comprises a digital file for receiving and storing at least a portion of the wireless data, control logic at the host to process at least the portion of the wireless data to generate a status of the user, a memory storage device for recording the status, and an output for communicating at least a portion of the status or associated information over a communication link to one or more display output devices, wherein the one or more display output devices are located remotely from the host.

In another embodiment, a diagnostic system includes a light source comprising one or more semiconductor diodes generating an input light beam. A lens system is configured to receive at least a portion of the input light beam and to communicate at least the portion of the input light beam onto a part of a user's body comprising blood, wherein at least the portion of the input light beam is used in a measurement on a user. A software application is capable of generating data based at least in part on the measurement on the user, wherein the data represents at least in part physiological information associated with the user. The software application is capable of operating on a control system adapted to receive, store and process at least a portion of the physiological information. The control system may have a touch-screen, circuitry for obtaining position information from a location sensor, and a wireless transceiver to transmit wireless data over a wireless link, the wireless data comprising at least a part of the physiological information, wherein the control system is further capable of receiving voice input signals and manually entered input signals. A host comprises a digital file for receiving and storing at least a portion of the wireless data, control logic at the host to process at least the portion of the wireless data to generate a status of the user, a memory storage device for recording the status, and an output for communicating at least a portion of the status or associated information over a communication link to one or more display output devices, wherein the one or more display output devices are located remotely from the host.

In yet another embodiment, a diagnostic system includes a light source comprising one or more semiconductor diodes generating an input light beam. A lens system is configured to receive at least a portion of the input light beam and to communicate at least the portion of the input light beam onto a part of a user's body comprising blood, wherein at least the portion of the input light beam is used in a measurement on a user, wherein the measurement comprises a spectroscopic procedure to measure a property of the blood, and wherein the spectroscopic procedure is based at least in part on a comparison of amplitudes at a plurality of associated wavelengths transmitted or reflected from the blood. A software application is capable of generating data based at least in part on the measurement on the user, wherein the data represents at least in part physiological information associated with the user. The software application is capable of operating on a control system adapted to receive, store and process at least a portion of the physiological information. The control system may have a touch-screen, circuitry for obtaining position information from a location sensor, and a wireless transceiver to transmit wireless data over a wireless link, the wireless data comprising at least a part of the physiological information, wherein the control system is further capable of receiving voice input signals and manually entered input signals, and wherein the control system is further coupled to an audio output device. A host comprises a digital file for receiving and storing at least a portion of the wireless data, control logic at the host to process at least the portion of the wireless data to generate a status of the user, wherein the control logic includes a voice recognition software to process at least a portion of the voice input signals. The host further comprises a memory storage device for recording the status, and an output for communicating at least a portion of the status or associated information over a communication link to one or

more display output devices, wherein the one or more display output devices are located remotely from the host.

In one embodiment, a light-based medical diagnostic system includes a pump source comprising a plurality of semiconductor diodes with pump beams, a multiplexer capable of combining the plurality of semiconductor diode pump beams and generating at least a multiplexed pump beam comprising one or more wavelengths, a first waveguide structure configured to receive at least a portion of the one or more wavelengths, wherein the first waveguide structure comprises at least in part a gain fiber and outputs a first optical beam, and a second waveguide structure configured to receive at least a portion of the first optical beam and to communicate at least the portion of the first optical beam to an output end of the second waveguide structure to form an output beam, wherein at least a portion of the output beam comprises at least one wavelength in the range of 1.7 microns or more. A lens system is configured to receive at least the portion of the output beam and to communicate at least the portion of the output beam through a patient's mouth onto a part of a patient's body comprising a patient's blood. In various embodiments, at least the portion of the output beam is adapted for use in medical diagnostics to measure a property of the patient's blood, wherein the medical diagnostics comprise a spectroscopic procedure comprising a differential measurement, wherein the differential measurement is based at least in part on a comparison of amplitudes at a plurality of associated wavelengths transmitted or reflected from the patient's blood.

In another embodiment, a light-based diagnostic system includes a pump source comprising a plurality of semiconductor diodes with pump beams, a multiplexer capable of combining the plurality of semiconductor diode pump beams and generating at least a multiplexed pump beam comprising one or more wavelength, first and second waveguide structures, and a lens system. The first waveguide structure is configured to receive at least a portion of the one or more wavelengths, wherein the first waveguide structure comprises at least in part a fused silica fiber, and outputs a first optical beam. The second waveguide structure is configured to receive at least a portion of the first optical beam and to communicate at least the portion of the first optical beam to an output end of the second waveguide structure to form an output beam. The lens system is configured to receive at least a portion of the output beam and to communicate at least the portion of the output beam through an orifice in a patient's body. In various embodiments, at least the portion of the output beam is adapted for use in multi-wavelength diagnostics to measure a property of a part of the patient's body, wherein the multi-wavelength diagnostics comprise a spectroscopic procedure comprising a differential measurement, wherein the differential measurement is based at least in part on a comparison of amplitudes at a plurality of associated wavelengths transmitted or reflected from the part of the patient's body.

In yet another embodiment, a light-based medical diagnostic system includes a pump source comprising a plurality of semiconductor diodes with pump beams and a multiplexer capable of combining the plurality of semiconductor diode pump beams and generating at least a multiplexed pump beam comprising one or more wavelengths. A first waveguide structure is configured to receive at least a portion of the one or more wavelengths, wherein the first waveguide structure comprises at least in part a fused silica fiber, and outputs a first optical beam. A second waveguide structure is configured to receive at least a portion of the first optical beam and to communicate at least the portion of the first optical beam to an output end of the second waveguide structure to form an output beam. A lens system is configured to receive at least a portion of the output beam and to communicate at least the portion of the output beam onto a part of a patient's body comprising a patient's blood.

In one embodiment, a medical device comprises an insertable portion capable of being inserted into an orifice associated with a body of a patient. The insertable portion comprising an automated head unit capable of being manipulated in at least two axes of motion based at least in part on one or more control signals. The medical device further comprises one or more controllers coupled to the automated head unit. In one particular embodiment, the one or more controllers generate the one or more control signals based at least in part on an input signal.

In another embodiment, a medical device capable of minimizing tissue damage comprises an insertable portion capable of being inserted into an orifice associated with a body of a patient. The medical device further comprises one or more sensors coupled to the insertable portion. The one or more sensors capable of generating a feedback signal capable of being used to substantially minimize damage to tissue associated with the patient.

In yet another embodiment, a medical device capable of being used in a medical procedure comprises a pump laser capable of generating a pump signal. The medical device further comprises a Raman wavelength shifter coupled to the pump laser, at least a portion of the wavelength shifter comprising a waveguide structure. In one particular embodiment, the Raman wavelength shifter generates an output optical signal comprising a wavelength of approximately 1.7 microns or more.

In still another embodiment, a medical device capable of being used in a medical procedure comprises a Raman wavelength shifter operable to generate an optical signal comprising a mid-infrared wavelength. At least a portion of the Raman wavelength shifter comprises a chalcogenide waveguide.

In another embodiment, a system for controlling a medical device includes a monitor capable of communicating medical information associated with a patient and a communication device capable of receiving one or more input signals from a user. In one particular embodiment, the one or more input signals are based at least in part on the medical information displayed on the monitor. The system further includes one or more processors coupled to the communicated device and operable to convert the one or more input signals into one or more control signals capable of being used to manipulate a medical device.

Depending on the specific features implemented, particular embodiments may exhibit some, none, or all of the following technical advantages. Various embodiments may be capable of reducing medical professional fatigue through the implementation of a control system capable of manipulating a medical device through voice commands. Some embodiments may be capable of controlling a medical device from a remote location. Other embodiments may be capable of reducing the level of dexterity required of a medical professional when performing a medical procedure.

Other technical advantages will be readily apparent to one skilled in the art from the following figures, description, and claims. Moreover, while specific advantages have been enumerated, various embodiments may include all, some, or none of the enumerated advantages.

BRIEF DESCRIPTION OF THE DRAWINGS

To provide a more complete understanding of the present invention and certain features and advantages, thereof, refer-

ence is made to the following description taken in conjunction with the accompanying drawings, in which:

FIG. **1** illustrates one example embodiment of a medical device control system;

FIG. **2** illustrates another example embodiment of a medical device control system;

FIG. **3** illustrates an example medical device capable of being inserted into a patient's body during a medical procedure;

FIG. **4** is a block diagram illustrating a flow of command signals from a medical professional to a medical device in a medical device control system;

FIG. **5** is a flow chart illustrating an exemplary method for processing a voice control signal and/or a command signal received by a medical device control system;

FIG. **6**A compares a surgical incision made using a 2.94 micron optical signal wavelength to a surgical incision made using a 6.45 micron optical signal wavelength;

FIG. **6**B illustrates example evanescent spectra in different cell-type regions;

FIG. **7** illustrates example attenuation characteristics of several optical fibers based on wavelength;

FIGS. **8**A through **8**D are block diagrams illustrating example embodiments of Raman wavelength shifters and/or Raman oscillators capable of shifting a pump signal to an output signal wavelength of 1.7 microns or more; and

FIGS. **9**A through **9**C are block diagrams illustrating example embodiments of pump sources that are capable of generating a pump signal for use in a Raman wavelength shifter.

DESCRIPTION OF EXAMPLE EMBODIMENTS

As required, detailed embodiments of the present invention are disclosed herein; however, it is to be understood that the disclosed embodiments are merely exemplary of the invention that may be embodied in various and alternative forms. The figures are not necessarily to scale; some features may be exaggerated or minimized to show details of particular components. Therefore, specific structural and functional details disclosed herein are not to be interpreted as limiting, but merely as a representative basis for teaching one skilled in the art to variously employ the present invention.

FIG. **1** illustrates one example embodiment of a medical device control system **100**. In this example, system **100** includes a medical device **10**, a manipulator **40**, a microphone **50**, a display device **60**, and a host **70**. In various embodiments, system **100** may be capable of receiving voice commands associated with the manipulation of medical device **10** from a medical professional, such as a nurse, a medical assistant, a medical technician, and/or a doctor. In some cases, system **100** is capable of assisting a medical professional during a medical procedure by processing data signals associated with one or more voice commands and manipulating medical device **10** in response to those commands.

Medical device **10** may comprise any device or instrument that a medical professional needs to perform a medical procedure. Medical device **10** can comprise, for example, a surgical scalpel, a scope, a laser, an imaging device, a microscope, or a combination of these or any other suitable device. As used throughout this document, the term "scope" refers to any medical device capable of entering a patient's body, such as endoscopes, colonoscopes, gastroscopes, enteroscopes, bronchoscopes, laryngoscopes, choledochoscopes, sigmoidoscopes, duodenoscopes, arthoroscopes, cystoscopes, hyteroscopes, laparoscopes, or a combination of these or any other suitable device.

In one particular embodiment, medical device **10** comprises an endoscope. In those cases, the endoscope may comprise an insertable portion capable of being inserted through an orifice associated with a patient. In other embodiments, the insertable portion may be capable of being guided through the patient's orifice, and capable of collecting biological samples from the patient for investigation. The orifice associated with the patient may comprise, for example, a throat, a mouth, a nasal passage, an orifice created by the medical professional, and/or any other suitable orifice. In some embodiments, medical device **10** may include a fiber-optic cable with a lens system at the end that is capable of sending images to a camera and/or a display device, such as display device **60**.

In other embodiments, medical device **10** may comprise one or more sensors coupled to feedback control circuitry that is capable of minimizing collateral tissue damage during a medical procedure. In various embodiments, the one or more sensors and the control circuitry may be capable of providing positioning information to a medical professional and/or a controller, such as system controller **90**. In other embodiments, the one or more sensors and the control circuitry may be capable of providing data associated with one or more physiological parameters associated with the patent to a medical professional and/or a controller. In some cases, the one or more sensors may be capable of detecting and/or alerting a medical professional or a controller when medical device **10** is in close proximity to and/or in contact with tissue. In other cases, the one or more sensors and the control circuitry may be capable of detecting when medical device **10** is in contact with tissue and capable of overriding control signals received by medical device **10**.

In this example, manipulator **40** includes an actuation unit **20** and a supporting structure **30**. Actuation unit **20** may house one or more control systems capable of receiving control signals and manipulating medical device **10** in response to those control signals. The one or more control systems may comprise, for example, a mechanical control system, an electrical control system, or a combination of these or any other control system. As used throughout this document, the phrase "mechanical control system" refers to a control system that at least partially includes mechanical components. In various embodiments, actuation unit **20** can implement a mechanical control system, such as a hydraulic system, pneumatic system, or a pulley guidewire system.

Supporting structure **30** may comprise a robotic arm, one or more pivoted links, multiple links connected together to move in a "scissor-like" manner, or any other structure capable of supporting and manipulating medical device **10**. Although this example depicts manipulator **40** and medical device **10** as separate devices, manipulator **40** and medical device **10** can comprise a unitary medical apparatus capable of performing the desired functionalities without departing from the scope of the present disclosure. For example, manipulator **40** and medical device **10** can be combined to form a unitary medical apparatus, such as an endoscope, have an automated portion.

In some embodiments, a freedom of motion associated with manipulator **40** can have a resolution that substantially replicates the manual dexterity of a medical professional and/or a manual medical device used by the medical professional. In some cases, manipulator **40** may have a step size and/or angle of rotation step size that is substantially similar to the manual dexterity of a medical professional and/or a manual medical device used by the medical professional. For example, the number of degrees of manipulation freedom associated with medical device **10** can match the number of degrees of manipulation freedom currently available on

manual devices. That is, if a conventional manual device that has four degrees of freedom in the x-y plane, then the range of motion associated with manipulator **40** can include at least four degrees of freedom in the x-y plane. In some embodiments, manipulator **40** may include manual override controls that allow a medical professional to exercise manual control of medical device **10**.

Manipulator **40** is coupled to host **70** through a first communication link **45**. As used throughout this document, the term "couple" and or "coupled" refers to any direct or indirect communication between two or more elements, whether or not those elements are in physical contact with one another. In this example, first communication link **45** is operable to facilitate the communication of command/data signals **47** between manipulator **40** and host **70**. Command/data signals **47** may comprise, for example, video signals from a video device coupled to medical device **10**, data obtained by sensors coupled to medical device **10**, or manipulation commands generated in response to voice commands, auxiliary input commands, and/or automated commands.

In this example, host **70** is capable of performing a desired communicating and/or computing functionality. For example, host **70** may be capable of at least partially contributing to the manipulation of medical device **10**. In other embodiments, host **70** may be capable of collecting, entering, processing, storing, retrieving, amending, and/or dispatching medical data during a medical procedure. In operation, host **70** may execute with any of the well-known MS-DOS, PC-DOS, 0S-2, MAC-OS, WINDOWS™, UNIX, or other appropriate operating systems. In some embodiments, host **70** may include a graphical user interface (GUI) **72** that enables a medical professional to display medical data and/or medical video associated with medical device **10**. Host **70** may comprise, for example, a desktop computer, a laptop computer, a server computer, a personal digital assistant, and/or any other computing or communicating device or combination of devices.

In this example, host **70** includes system controller **90** capable of processing, collecting, storing, retrieving, and/or amending medical data and/or video during a medical procedure. System controller **90** may comprise one or more computers, an embedded microprocessor, or any other appropriate device or combination of devices capable of processing and/or generating voice command signals **47** and/or **57**. In operation, system controller **90** may execute with any of the well-known MS-DOS, PC-DOS, 0S-2, MAC-OS, WINDOWS™, UNIX, or other appropriate operating systems. In this embodiment, system controller **90** may implement voice recognition software operable to process voice command signals **57**. For example, system controller **90** may implement one or more voice recognition software programs, such as ViaVoice or Dragon Speech Recognition software, or any appropriate proprietary or nonproprietary voice recognition software. In certain embodiments, the voice recognition software may be programmed to recognize the medical professional's voice and commands may be customized to the medical professional's preferences. In addition, the voice recognition software may be capable of filtering out background noise.

System controller **90** is operable to process voice command signals **57**, generate command/data signals **47** in response to the voice command, and communicate the command/data signals **47** to manipulator **40**. System controller **90** may also be used to collect and record data using a memory storage device. System controller **90** may be operable to provide data associated with a patient's medical status during a medical procedure to the medical professional using display device **60** and/or GUI **72**, or any other appropriate devices.

In this embodiment, host **70** also includes an auxiliary input device **80** coupled to system controller **90**. Although a keyboard is depicted in this example, any other device capable of inputting commands and/or data may be used without departing from the scope of this disclosure. In this example, auxiliary device **80** is operable to facilitate manual entry of manipulation commands to supplement and/or replace voice commands. In addition, the medical professional may use auxiliary device **80** to input data into system controller **90**, such as the patient's physiological parameters, for example, blood pressure, heart rate, blood oxygen level, or to retrieve data stored in a memory device associated with host **70**.

In this example, system **100** also includes display device **60** and a graphical user interface (GIU) **72**, each capable of displaying medical information, such as medical data and/or medical video. Display device **60** and GUI **72** may comprise, for example, a monitor, a LED, a heads-up display, virtual reality goggles, a closed circuit television, a CAVE environment, or any other device or combination of devices capable of displaying. In some cases, display device **60** and GUI **72** may display a live video image from a video device associated with medical device **10**, information about a patient's medical status, such as the current state of any number of the patient's physiological parameters, information about the particular medical device **10** being used, or any other information that may assist a medical professional during a medical procedure. In this example, display device **60** is coupled to host **70** through a third communication link **65**, which is operable to facilitate the communication of data signals **67** to and/or from host **70**.

In this example, system **100** also includes communication device **50** that enables a medical professional to communicate with host **70**. Communication device **50** can comprise any device that enables a medical professional to communicate with host **70**. Communication device **50** may comprise, for example, a telephone, a wireless device, a voice-over-IP device, a unidirectional microphone attached to a headset worn by a medical professional, a bi-directional microphone, or any other suitable communicating device or combination of devices. Communication device **50** may be selectively attached to and/or placed near the medical professional for ease of use. Attaching communication device **50** to the medical professional can, in some cases, advantageously minimize background noise. Although system **100** includes one communication device **50** in this example, any other number of communication devices may be used without departing from the scope of the present disclosure. Communication device **50** is coupled to host **70** through a second communication link **55**, which is operable to facilitate the communication of voice command signals **57** between communication device **50** and host **70**.

In the illustrated embodiment, system **100** includes at least a first communications link **45**, a second communications link **55**, and a third communications link **65** each operable to facilitate the communication of data to and/or from host **70**. Communications links **45**, **55**, and **65** may include any hardware, software, firmware, or combination thereof. In various embodiments, communications link **45**, **55**, and **65** may comprise any communications medium capable of assisting in the communication of analog and/or digital signals. Communications links **45**, **55**, and **65** may, for example, comprise a twisted-pair copper telephone line, a fiber optic line, a Digital Subscriber Line (DSL), a wireless link, a USB bus, a PCI bus,

an Ethernet interface, or any other suitable interface operable to assist in the communication of information to and/or from network **104**.

In conventional medical procedures involving a scope, a medical professional manually manipulates the medical device based on feedback from the medical device. The medical professional typically uses one hand to hold the medical device and guide it into and through a patient's body. The medical professional's other hand is used to manipulate the manual controls of the medical device. Thus, conventional systems typically require significant manual dexterity, which can result in a significant amount of strain on the medical professional.

Unlike conventional procedures, system **100** comprises a communication device **50** that enables a medical professional to manipulate medical device **10** using voice commands, auxiliary input commands, and/or automated commands. Allowing a medical professional to use voice commands and/or automated commands can significantly reduce the manual dexterity, and the resulting strain, imposed on the medical professional during a medical procedure.

In operation, a medical professional can speak voice commands into communication device **50** for communication to host **70**. Host **70** receives voice command signals **57** from communication device **50** and processes those signals using a voice recognition module associated with host **70**. Host **70** converts the voice command signals into command/data signals **47** and communicates signals **47** to manipulator **40**. Manipulator **40** responds by causing medical device **10** to perform its desired function. Voice commands may comprise, for example, a voice to take a photograph of a portion of the patient's body, a voice command to change an image size by zooming in or out, or any other suitable voice command capable of causing medical device **10** to perform its functionality. In other embodiments, host **70** is capable of automatically generating command/data signals **47** based at least in part on data received from medical device **10** through communication link **47**.

FIG. **2** illustrates another example embodiment of a medical device control system **300**. System **300** includes system **150** for remote manipulation of a medical device **210** and system **200** for voice control of medical device **210**. In this example, system **150** is capable of controlling at least a portion of system **200** from a remote location. For example, a medical professional may use system **150** to remotely control system **200** in the case where the medical professional is not located near system **200**. The remote location may comprise, for example, a different location in the hospital that includes system **200**, a location in a different hospital, or any other location.

System **150** can include a communication device **155**, a display device **160**, a first auxiliary input device **165**, and a second auxiliary input device **180**. The structure and function of communication device **155**, display device **160**, and second auxiliary input device **180** can be substantially similar to the structure and function of communication device **50**, display device **60**, and auxiliary input device **80**, respectively, of FIG. I. First auxiliary input device **165** may comprise, for example, a joystick, a computer mouse, a rollerball, knobs, levers, buttons, touchpads, touchscreens, or any other appropriate control device capable of being used to control manipulator **240**. In this example, a medical professional can use first auxiliary input device **165** to control manipulator **240** from the remote location.

In this embodiment, system **200** includes a medical device **210**, a manipulator **240**, a communication device **250**, and a display device **260**. System **200** also includes a host **270** comprising GUI **272**, a third auxiliary input device **280**, and a system controller **290**. Although host **270** resides within system **200** in this example, host **270** could reside within system **150** or could reside in any location accessible to system **300** without departing from the scope of the present disclosure. The structure and function of medical device **210**, manipulator **240**, communication device **250**, display device **260**, host **270**, GUI **272**, third auxiliary input device **280**, and system controller **290** can be substantially similar to the structure and function of medical device **10**, manipulator **40**, communication device **50**, display device **60**, host **70**, GUI **72**, auxiliary input device **80**, and system controller **90**, respectively, of FIG. **1**.

System **150** communicates with system **200** over communication link **305**. Although communication link **305** comprises a single communication link in this example, any other number of communication links may be used without departing from the scope of the present disclosure. Communications link **305** may include any hardware, software, firmware, or combination thereof. In various embodiments, communications link **305** may comprise a communications medium capable of assisting in the communication of analog and/or digital signals. Communications link **305** may, for example, comprise a twisted-pair copper telephone line, a fiber optic line, a Digital Subscriber Line (DSL), a wireless link, a USB bus, a PCI bus, an Ethernet interface, or a combination of these or other elements.

In some embodiments, a first medical professional can manually insert medical device **210** into a patient. In those cases, system **200** can communicate data to a second medical professional using remote system **150** through communication link **305**. The second medical professional, while monitoring display device **160**, can remotely manipulate medical device **210** using voice instructions communicated through communication device **155** coupled to communication link **305** to host **270**. In this manner, the medical professional using system **150** can substantially emulate a medical professional's manual control of medical device **210**. In other embodiments, the medical professional can remotely manipulate medical device **210** using auxiliary devices **165** and/or **180**. In an alternative embodiment, a medical professional can insert medical device **210** into a patient using system **200** locally or using system **150** remotely.

In addition to voice command control and/or auxiliary input device control, other methods of medical device control may be implemented. In some cases, system **150** and/or system **200** can implement a heads-up-display (HUD) capable of controlling and/or manipulating medical device **210** and/or manipulator **240**. The HUD may be capable of projecting images onto or near the eyes of a medical professional and capable of sending command signals using a virtual control device attached to the medical professional. In another example, the medical professional may wear a helmet capable of manipulating medical device **210** and/or manipulator **240** based at least in part on command signals generated in response to a motion associated with the head of the medical professional. For example, rotation of the head to the right may indicate that the operator wants the medical device to move to the right.

FIG. **3** illustrates an example medical device **400**. In various embodiments, at least a portion of medical device **400** may be inserted into a patient's body through an orifice during a medical procedure. The orifice may comprise, for example, the patient's throat or mouth, the patient's nasal passages, an incision made during surgery, or any other suitable orifice. In this particular example, medical device **400** comprises a scope. The scope may comprise, for example, an endoscope,

a colonoscope, a gastroscope, a enteroscope, a bronchoscope, a laryngoscope, a choledochoscope, a sigmoidoscope, a duodenoscope, a arthoroscope, a cystoscope, a hyteroscope, a laparoscope, or a combination of these or any other suitable device. In various embodiments, medical device **400** can be controlled through, for example, voice commands, auxiliary input command, automated commands, and/or manual commands. In some cases, medical device **400** can be coupled to a medical device control system, such as system **100** or system **300** of FIG. **1** and FIG. **2**, respectively.

Medical device **400** includes a base portion **410** capable of controlling and/or at least partially contributing to the manipulation of an insertable portion **420**. In this example, base portion **410** includes control system **435** capable of at least partially contributing to the control and/or the manipulation of insertable portion **420**. Control system **435** may be capable of receiving, processing, executing, and/or communicating one or more signals associated with the manipulation of insertable portion **420**. In various embodiments, these signals received by base portion **410** may comprise, for example, voice commands, auxiliary input commands, automated commands, physiological parameters, video data, positioning data, or a combination of these or other signal types.

In various embodiments, control system **435** may reside in a location outside of base portion **410** and/or may be partially or wholly included within base portion **410**. Control systems **435** may comprise, for example, a mechanical control system, an electrical control system, an electro-mechanical control system, or a combination of these or any other suitable control system. The phrase "mechanical control system" refers to a control system that at least partially includes mechanical components. Mechanical control systems can include, for example, hydraulic components, pneumatic components, pulleys, guidewires, gears, actuators, pushrods, sprocket/chain mechanisms, feedback control circuitry, or any other suitable components.

In this particular embodiment, control system **435** includes a manual override control module **411**, an x-axis control module **412**, a y-axis control module **414**, and a z-axis control module **416**. Control modules **411**, **412**, **414**, and **416** may include any hardware, software, firmware, or combination thereof. In some embodiments, control modules **411**, **412**, **414**, and **416** may comprise buttons, knobs, dials, control circuitry, or any other suitable control input device. In this particular embodiment, control modules **412**, **414**, and **416** operate to receive and process input signals from a medical professional. In addition, control modules **412**, **414**, and **416** operate to at least partially contribute to the manipulation of insertable portion **420**. The input signals may comprise, for example, voice commands, auxiliary input commands, and/or manual input commands. In other embodiments, control modules **412**, **414**, and **416** operate to receive and process input signals from a host and/or system controller. For example, a medical professional can use control modules **412**, **414**, and **416** to individually control medical device **400** in the x-, y-, and z-axes, respectively. In various embodiments, override control module **411** may be capable of enabling the medical professional to override the automatic operation of medical device **400** as necessary during a medical procedure.

Control system **435** may also include touch-screen **417** and controller **418**. Controller **418** operates to combine the individual control functions of control modules **412**, **414**, and **416** into a single controller. For example, a medical professional can use controller **418** and/or touchscreen **417** to manually control medical device **400** in the x-, y-, and z-axes, respectively. Controller **418** can comprise any device capable of controlling the manipulation of insertable portion **420**. Controller can comprise, for example, a joystick, a rollerball, knobs, levers, buttons, or any other appropriate control device.

Control system **435** further includes motors **436**, pulleys **432**, and guidewires **434**. Although motors, pulleys, and guidewires are used in this example, control system **435** can include any other components capable of contributing to the manipulation of insertable portion **420** without departing from the scope of the present disclosure. In this example, motors **436** operate to control the positioning of insertable portion **420** based at least in part on control signals received from modules **411**, **412**, **414**, and **416**, and/or controller **418**. Motors **436** operate to manipulate guidewires **434** coupled to one end of insertable portion **420**. In other embodiments, base unit **410** includes actuators, pushrods, sprocket/chain mechanisms, feedback control circuitry, or any other control mechanism appropriate to control insertable portion **420**.

In this example, pulleys **432** and motors **436** operate to control the tension in guidewires **434**. In some embodiments, each guidewire **434** may comprise two or more segments, each segment comprising a different radial stiffness. For example, a first segment of guidewire **434** may be coupled to pulley **432**, and a second segment of guidewire **434** may be coupled to an end of insertable portion **420**. In that example, the second segment of guidewire segment may have a radial stiffness that is less than a radial stiffness associated with the first segment guidewire. In various embodiments, the force exerted by guidewires **434** can cause insertable portion **430** to move in a corresponding manner.

Medical device **400** may also include insertable portion **420** connected to base portion **410** and capable of being inserted into an orifice or incision in a patient's body during a medical procedure. In this particular embodiment, a medical professional can, using base portion **410**, manipulate insertable portion **420** in the patient's body to perform a medical procedure. In various embodiments, a medical professional can control insertable portion **420** using voice commands, auxiliary input commands, automated commands, and/or manually.

In this example, insertable portion **420** includes a flexible portion **430** and an automated head unit **440**. In this particular embodiment, one end of each guidewire **434** is connected to one end of automated head unit **440**, while the other end of each guidewire **434** is connected to one of pulleys **432**. Although pulleys and guidewires are used to manipulate automated head unit **440**, any other appropriate control mechanism may be used without departing from the scope of the present disclosure. In this example, control system **435** operates to create tension in guidewires **434**. The tension in guidewires **434** operates to exert a force on automated head unit **440**, which causes automated head unit **440** to move in a corresponding manner. For example, control system **435** may operate to apply tension to one or more guidewires **434** creating a force in the x-plane, which causes automated head unit **440** to move in the x-plane. Any suitable movement of automated head unit **440** in the x-y plane tends to impart a corresponding movement to flexible portion **430** in the x-y plane.

In this example, four guidewires **434** are used to manipulate automated head unit **440** with two guidewires **434** connected along the x-axis and two guidewires **434** connected along the y-axis. In an alternative embodiment, six or more guidewires **434** may be positioned around the periphery of the insertable portion **420**, which can allow a medical professional more precise control of medical device **400**. In some cases, the movement of automated head unit **440** may be controlled independently of the movement of flexible portion

430. In some embodiments, flexible portion **430** and automated head unit **440** may operate as "telescoping" tubes, where automated head unit **440** may retract into and extend from flexible portion **430** to adjust a length (L) of insertable portion **420**. Such a telescoping motion may be controlled through the positioning of pulleys **432** and guidewires **434**.

In this particular embodiment, control modules **412**, **414**, and/or **416** receive and process command signals corresponding to a desired manipulation of insertable portion **420**. Control module **412** and control module **414** are operable to control the motion of automated head unit **440** and the entire insertable portion **420** in the x-axis and y-axis, respectively. In some embodiments, control module **416** is operable to adjust the distance that automated head unit **440** moves relative to flexible portion **430**. In those cases, control module **416** is operable to cause motor **436** to position the pulleys **432** and guidewires **434** so as to extend and retract automated head unit **440** relative to flexible portion **430**. Control module **412** and control module **414** are operable to independently control the motion of automated head unit **440** regardless of length L, enabling insertable portion **420** to have independent motion in the x-, y-, and z-axes.

Insertable portion **420** may also include sensors **442** and a camera **444**. Although this example depicts sensors **442** as being connected to automated head unit **440**, sensors may be connected to any portion of medical device **400** without departing from the scope of the present disclosure. Injury may occur when a medical professional accidentally or mistakenly causes insertable portion **420** to contact tissue associated with the patient, which can cause bruising or damage to the tissue. Sensors **442** can comprise any device capable of providing data and/or a signal to a medical professional. Sensors **442** may be capable of generating and transmitting, for example, positioning information associated with insertable portion **420**, physiological information associated with the patient, control signals, a signal indicating the presence or absence of blood, or any other data. In one particular embodiment, sensors **442** are capable of generating and transmitting data associated with insertable portion's **420** proximity to tissue of the patient.

In other embodiments, sensors **442** may be capable of detecting a collision with tissue. In those cases, sensors **442** are capable of generating and transmitting a feedback signal to control modules **412**, **414**, **416**, a host coupled to medical device **400**, or a system controller coupled to medical device **400**. For example, sensors **442** may communicate data indicating that wall tissue of a patient's orifice has been encountered and that device **400** may need to be directed away from that wall to prevent injury to the patient's tissue. In some embodiments, sensors **442** operate to generate alarms associated with medical device **400**. For example, one or more sensors **442** may monitor the presence of blood in the orifice, so that the medical professional may be alerted to unexpected or excessive bleeding.

In operation, medical device **400** may be inserted into the patient by inserting insertable portion **420** into the appropriate orifice or incision. In some embodiments, a medical professional can insert medical device **400** into the patient. In other embodiments, the insertion of medical device **400** into the patient may be performed using a medical device control system implementing a manipulator, such as system **100** and manipulator **40** of FIG. **1** or system **300** and manipulator **240** of FIG. **2**.

In this particular embodiment, medical device **400** is capable of being manipulated in at least three axes of motion. That is, medical device **400** is capable of being manipulated in the x-axis, y-axis, and z-axis. In other embodiments, medical device **400** is capable of being manipulated in at least two axes of motion. In some embodiments, medical device **400** may be capable of manipulating insertable portion **420** one axis at a time. In other embodiments, medical device **400** may be capable of manipulating insertable portion **420** one axis at a time and manipulating insertable portion **420** along multiple axes substantially simultaneously. In this example, medical device **400** is capable of manipulating insertable portion **420** along multiple axes substantially simultaneously. As used throughout this document, the phrase, "substantially simultaneously" refers to the manipulation of insertable portion **420** and/or automated head unit **440** in multiple axes in response to an input command before responding to a subsequent input command. For example, medical device **400** can manipulate insertable portion **420** along the z-axis and, during that manipulation, medical device **400** can also manipulate insertable portion **420** along the x-axis. In various embodiments, medical device **400** can manipulate automated head unit **440** independently of the movement of flexible portion **430**.

FIG. **4** is a block diagram illustrating a flow of command signals from a medical professional to a medical device in a medical device control system **500**. In various embodiments, medical device control system **500** can be substantially similar to control system **100** of FIG. **1** or control system **300** of FIG. **2**. In this example, a communication device **550** receives a voice command **502** from a medical professional. In various embodiments, the structure and function of communication device **550** can be substantially similar to the structure and function of communication device **50** of FIG. **1**. Communication device **550** operates to convert voice command **502** into an electrical voice command signal **504** and to communicate electrical voice command signal **504** to a system controller **590**. In various embodiments, the structure and function of system controller **590** can be substantially similar to the structure and function of system controller **90** of FIG. I.

In this particular embodiment, system controller **590** comprises a voice recognition module **592** capable of at least partially contributing to one or more functions of system controller **590**. That is, voice control module **592** is not required to be capable of performing the desired functionality of system controller **590** alone, but may contribute to the performance of the function as part of a larger routine. In this example, voice recognition module **592** at least partially contributes to the conversion of voice command signal **504** to a control signal **506**. Voice recognition module **592** may include any hardware, software, firmware, or any combination thereof that is capable of converting voice command signal **504** into control signal **506**.

System controller **590** also includes a command generator module **594** capable of at least partially contributing to one or more functions of system controller **590**. In this example, command generator module **594** operates to receive control signal **506** communicated from voice recognition module **592** and at least partially contributes to the conversion of control signal **506** into a command signal **508**. Command generator **594** may comprise any hardware, software, firmware, or any combination thereof that is capable of converting control signal **506** into command signal **508**. In this example, command generator module **594** communicates command signal **508** to a signal generator module **596** capable of at least partially contributing to one or more functions of system controller **590**. In this example, signal generator module **596** at least partially contributes to the conversion of command signal **508** into an actuation signal **510**. Signal generator **596**

may comprise any hardware, software, firmware, or any combination thereof that is capable of converting command signal **508** into actuation signal **510**.

In this example, system controller **590** communicates actuation signal **510** to a device control module **560** capable of manipulating a medical device **570**. In various embodiments, the structure and function of device control module **560** can be substantially similar to the structure and function of actuation unit **20** of FIG. **1** or base portion **410** of FIG. **3**. In various embodiments, the structure and function of medical device **570** can also be substantially similar to the structure and function of medical device **10** of FIG. **1** or medical device **400** of FIG. **3**.

In various embodiments, device control module **560** may be capable of generating a feedback signal **512** and communicating feedback signal **512** to system controller **590**. Feedback signal **512** may comprise, for example, positioning data associated with medical device **570**, a video feed, a physiological parameter associated with a patient, or any other information associated with medical device **570**, device control module **560**, and/or a patient undergoing a medical procedure. In some embodiments, medical device **570** can communicate data **514** to system controller **590**. Data **514** may comprise, for example, positioning data, one or more physiological parameters associated with a patient, a live video feed associated with a camera coupled to medical device **570**, or any other data capable of being collected by medical device **570**.

In various embodiments, system controller **590** may be capable of generating commands on its own based at least in part on data **514** and/or feedback signal **512** communicated from medical device **570** and/or device control module **560**. For example, if medical device **570** comprises a scope with blood sensors, system controller **590** may stop the movement of the scope within a patient's body if data **514** is received from medical device **570** indicating that the patient is bleeding excessively.

In this example, system **500** also includes a display device **580** capable of displaying data associated with medical device **570** and/or a patient. The structure and functional of display device **580** can be substantially similar to the structure and function of display device **60** or GUI **72** of FIG. **1**. Although system **500** includes a single display device in this example, any other number of display devices may be used without departing from the scope of the present disclosure. In some embodiments, system controller **590** can communicate an output signal **516** containing data associated with medical device **570** and/or a patient to display device **580**.

In some embodiments, system **500** may also include an audio output device **587** capable of communicating data associated with medical device **570** and/or a patient. Audio output device **587** can comprise any device capable of providing an audio output signal, such as a speaker, headphones, an audio alarm device, or any other suitable audio output device. Although system **500** includes a single audio output device in this example, any other number of audio output devices may be used without departing from the scope of the present disclosure. In some embodiments, system controller **590** may communicate an audio output signal **516** to output device **587** so that the medical professional may receive the data associated with output signal **516** in audio format.

Although, in most cases, voice command **502** represents the primary control input into system **500**, system **500** also includes an auxiliary input device **585** capable of generating a control signal **518**. Control signal **518** can comprise data that is substantially similar to data contained within control signal **506**. In various embodiments, the structure and function of auxiliary input device **585** can be substantially similar to the structure and function of auxiliary input devices **165** or **180** of FIG. **2**. Although system **500** includes a single auxiliary input device in this example, any other number of auxiliary input devices may be used without departing from the scope of the present disclosure. In this particular embodiment, auxiliary input device **585** is coupled directly to command generator **594**. In some embodiments, auxiliary input device **585** may also receive data signals **520** from system controller **590**. For example, in a case where auxiliary input device **585** comprises a "force-feedback" joystick, signals **520** may comprise the feedback signal representing the force being exerted on medical device **570** by the patient's body.

FIG. **5** is a flow chart illustrating an exemplary method **600** for processing a voice control signal and/or a command signal received by a medical device control system. In one particular embodiment, voice control signals and/or command signals are received from system **100** of FIG. I. Although system **100** is used in this example, any other system, such as systems **300** and **500** of FIGS. **2** and **4**, respectively, may be used without departing from the scope of the present disclosure.

In this example, method **600** begins at step **602** where communication device **50** receives a voice command from a medical professional. Communication device **50** operates to convert the voice command into voice command signal **57** and communicates voice command signal **57** to host **70**. In this particular example, host **70** includes a voice recognition module that processes voice command signal **57** at step **604** by converting voice command signal **57** into a control signal. In various embodiments, the structure and function of the voice recognition module can be substantially similar to voice recognition module **592** of FIG. **4**. In this example, the voice recognition module further operates to identify the specific voice command represented by the control signal at step **606**. In some embodiments, identifying the specific voice command may be accomplished by comparing the received control signal with a list of pre-programmed commands stored in a memory device associated with host **70**.

The voice recognition module validates the control signal at step **608**. If the voice command is not recognized as a pre-programmed command, the invalid voice command is ignored and the method loops back to step **602**. If the voice command is valid, the voice recognition module communicates the control signal to a command generator. In this example, the command generator operates to convert the control signal into a command signal representing the voice command at step **610**. In various embodiments, the structure and function of the command generator can be substantially similar to the structure and function of command generator module **594** of FIG. **4**.

In an alternate embodiment, auxiliary control signals capable of manipulating a medical device may be generated by an auxiliary input device at step **616**. In various embodiments, the auxiliary input device may comprise, for example, auxiliary input devices **165** and/or **180** of FIG. **2**. The auxiliary input device communicates the auxiliary control signal to the command generator, which converts the auxiliary control signal into a command signal at step **610**. The command generator also operates to communicate the command signal to a signal generator.

In this example, the signal generator operates to convert the command signal into an actuation signal **47** representing the voice command of the medical professional at step **612**. In various embodiments, the structure and function of the signal generator can be substantially similar to the structure and function of signal generator module **596** of FIG. **4**. In this

example, manipulator **40** and/or medical device **10** operates to receive and execute actuation signal **47** at step **614**.

Medical devices, such as a scope, that are adapted to be inserted into the patient's body typically permit the introduction of a waveguide structure or other wired device through the patient's orifice. The waveguide structure can comprise, for example, an optical fiber, a hollow tube waveguide, an air core waveguide, a planar waveguide, or a combination of these or other devices. Examples of such additional devices include, for example, surgical knives, sample collectors, and/or cauterizing heads. In some cases, inserting a waveguide structure may enable, for example, the early detection of cancerous cells and may contribute to the removal of the cancerous cells. In various embodiments, the waveguide structure may communicate an optical signal wavelength of 1.7 microns or more.

In some embodiments, a waveguide structure may be implemented in a medical device that uses an optical signal wavelength in the mid-infrared (mid-IR) wavelength range to perform surgery and/or spectroscopy on a patient. In various embodiments, a wavelength in the mid-IR range comprises a wavelength between approximately two (2) microns and approximately ten (10) microns. In other embodiments, a wavelength in the mid-IR range comprises a wavelength between approximately five (5) and seven (7) microns. For light-based surgery and spectroscopy, it can be particularly advantageous to use an optical signal wavelength in the range between approximately 5 microns to approximately 7 microns to minimize tissue damage or collateral damage. In a particular embodiment, an optical signal having a wavelength of approximately 6.45 microns may be advantageously used for light-based surgery and/or spectroscopy.

In some embodiments, a Raman wavelength shifter coupled to a pump laser is capable of generating an optical signal wavelength in the mid-IR range. As used in this document, the phrase "Raman wavelength shifter" refers to any device that uses the Raman effect to shift a shorter optical signal wavelength to a longer optical signal wavelength. The Raman wavelength shifters may comprise, for example, one or more reflectors, one or more gratings, an optical fiber, or a combination of these or other elements. In various embodiments, the Raman wavelength shifter may comprise, for example, a chalcogenide glass fiber that is capable of shifting the shorter pump laser wavelength to a longer wavelength, such as a wavelength in the mid-IR region. The chalcogenide fiber may comprise, for example, a ZBLAN fiber, a sulphide fiber, a selenides fiber, or a telluride fiber, or a combination of these or other fiber types.

In other embodiments, a first wavelength shifter coupled to a pump laser may be capable of shifting an optical signal wavelength to approximately 2 microns. The first wavelength shifter may comprise, for example, a fused silica optical fiber capable of shifting the shorter pump laser wavelength to approximately two (2) microns. In that example, a second Raman wavelength shifter is coupled to the first Raman wavelength shifter and is capable of shifting the two (2) micron signal to a wavelength in the five (5) to seven (7) micron range. In that example, the second Raman wavelength shifter comprises a chalcogenide glass fiber.

FIG. **6**A compares a surgical incision made using a 2.94 micron optical signal wavelength to a surgical incision made using a 6.45 micron optical signal wavelength. This figure illustrates that tissue damage, such as denatured tissue, can result when a medical device implements a 2.94 micron optical signal wavelength. This tissue damage tends to result from the protein temperatures in the tissue do not uniformly exceed the water temperature in the aqueous components of the tissue.

Compared to the incision performed using the 2.94 micron optical signal wavelength, the incision made using the 6.45 micron optical signal has little or no denatured tissue. This reduction in collateral tissue damage is based at least in part on the tissue's ability to absorb differential energy. For example, when using an optical signal wavelength at approximately 6.45 microns to create an incision, the protein temperatures in the tissue uniformly exceed the water temperature in the tissue and the protein begins to transform into brittle denatured protein. The brittle fracture of the proteins at the onset of explosive vaporization leads to the confinement of collateral damage. Therefore, the use of a 6.45 micron optical signal wavelength as a tissue cutting implement may minimize collateral tissue damage during laser-based surgery. By using an optical signal wavelength of 6.45 microns with a medical scope-type device, "clean" surgery may be performed for many medical procedures, such as removing cancerous polyps. Similar results can be obtained using an optical signal wavelength in the five (5) to seven (7) micron range.

FIG. **6**B illustrates example evanescent spectra in different cell-type regions (using a mouse as the biological sample). This figure illustrates that cancerous cells tend to show a distinct reduction **700** in transmission at an optical signal wavelength of approximately 6.1 microns. Medical professionals can exploit this spectral signature in various medical procedures, such as a procedure for the early detection of cancer. Thus, an optical signal wavelength in the mid-IR range may be used to perform a medical procedure for the early detection of tissue abnormalities such as cancer cells. In other embodiments, an optical signal wavelength in the mid-IR range can be used in a diagnostic procedure, such as spectroscopy. Diagnostic techniques capable of using the mid-IR optical signal wavelength include, for example, transmission, reflection, fluorescence, and near field microscopy. Although specific examples of spectroscopy are discussed, any other appropriate form of spectroscopy may be used without departing from the scope of this disclosure.

To improve the signal-to-noise ratio of a spectroscopic measurement such as in FIG. **6**B, several methodologies may be used. First, a differential measurement may be taken between a known cancer-free area and the suspect area, for example, differential spectroscopy rather than absolute spectroscopy. In addition, measurements may be taken at several wavelengths and compared to each other. For example, measuring the differential transmission of the tissue at two or more wavelengths, such as 5 microns and 6.1 microns, may: improve the signal-to-noise ratio of the cancer cell signature.

FIG. **7** illustrates example attenuation characteristics of several optical fibers based on wavelength. This example shows that fused silica ($Si0_2$) fibers become lossy above approximately 2 microns in wavelength, while mid-IR optical fibers remain relatively loss-less above 2 microns. A mid-IR fiber may comprise any optical fiber capable of at least partially transmitting for at least a portion of the mid-IR range. For example, a mid-IR fiber may comprise a chalcogenide fiber, such as a sulfide fiber, a selenides fiber, or a telluride fiber. Therefore, in some cases, a pump source coupled to a medical device, such as medical device **400** of FIG. **3**, may comprise a high powered pump source coupled to a Raman wavelength shifter comprising a mid-IR fiber. In a particular embodiment, such a pump source may operate in a pulsed mode or in a continuous wave mode. The power levels required depend on the particular application. For example,

spectroscopy may require a relatively low power level, while surgery may require a relatively high power level.

Conventional surgical devices capable of using a 5.0 to 6.5 micron optical signal wavelength typically implement a Free Electron Laser (FEL) pump source. However, a FEL pump source is a large and very expensive facility that tends to be impractical for surgical applications. Unlike conventional surgical devices, a medical device, such as device **400** of FIG. **3**, can include a pump laser coupled to one or more Raman wavelength shifters capable of shifting a shorter signal wavelength to a longer signal wavelength. In that example, at least a portion of the Raman wavelength shifter can be implemented in a waveguide structure. In various embodiments, the longer signal wavelength can comprise, for example, an optical signal wavelength in the mid-IR wavelength range. Coupling a pump laser to one or more Raman wavelength shifters can result in a commercially and economically viable optical cutting implement for use in a medical device. In addition, coupling a pump laser to one or more Raman wavelength shifters can result in a significantly smaller footprint area than a FEL pump source and can significantly reduce the cost.

Conventional wavelength shifters or oscillators are typically implemented in fused silica fiber. The loss associated with fused silica fiber tends to increase rapidly for optical signal wavelengths greater than about 2 or 2.3 microns. Unlike conventional wavelength shifters, a medical device, such as device **400** of FIG. **3**, can include a Raman wavelength shifter or oscillator that is capable of transmitting in the mid-IR wavelength range, such as chalcogenide optical fibers.

FIGS. **8**A through **8**D are block diagrams illustrating example embodiments of Raman wavelength shifters and/or Raman oscillators capable of shifting a shorter pump signal wavelength to a longer output signal wavelength. Although particular examples of wavelength shifters are described in FIGS. **8**A through **8**D, any other Raman wavelength shifter can be implemented without departing from the scope of the present disclosure.

FIG. **8**A is a block diagram illustrating one example of a Raman wavelength shifter **800** capable of shifting a shorter pump signal **810** wavelength to a longer output signal wavelength **812**. In this example, Raman wavelength shifter **800** operates to generate an optical signal wavelength **812** of 1.7 microns or more. In various embodiments, Raman wavelength shifter **800** can operate to generate an optical signal wavelength **812** in the mid-IR wavelength range. In other embodiments, Raman wavelength shifter **800** can operate to generate an optical signal wavelength **812** a wavelength in the five (5) to seven (7) micron range. In various embodiments, pump signal **810** can comprise, for example, a 1310 nanometer (nm) wavelength, 1390 nm wavelength, 1510 nm wavelength, or other optical signal wavelength.

Raman wavelength shifter includes a gain fiber **804** operable to facilitate shifting pump signal **810** to a desired wavelength. Gain fiber **804** may comprise any waveguide structure capable of wavelength shifting pump signal **810** to a longer wavelength or a different Raman cascade order. In this particular embodiment, gain fiber **804** comprises an optical fiber. The optical fiber used as gain fiber **804** may comprise, for example, a dispersion compensating fiber, a dispersion shifter fiber, a single mode fiber, a chalcogenide fiber, a fused silica optical fiber, or a combination of these or other fiber types. Raman wavelength shifter **800** also includes a broadband reflector **802** operable to substantially reflect all optical signal wavelengths contained within Raman wavelength shifter **800** and a pump signal coupler **806**. Reflector **802** may comprise any device capable of reflecting a wide range of wavelength signals, such as a mirror. Pump signal coupler **806** may comprise any device capable of coupling pump signal **810** to Raman wavelength shifter **800**, such as a wavelength division multiplexer or a power coupler.

In this example, Raman wavelength shifter **800** further includes a wavelength separator **808** capable of transmitting at least a portion of the desired wavelength from Raman wavelength shifter **800**. In addition, wavelength separator **808** operates to at least partially reflect a desired wavelength to gain medium **804** to continue lasing at the desired wavelength or wavelengths. In this particular embodiment, a cavity is formed between reflector **802** and wavelength separator **808**. Separator **808** could comprise, for example, a demultiplexer, one or more partially transmissive gratings, one or more partially transmitting mirrors, one or more Fabry Perot filters, one or more dielectric gratings, or any combination of these or other devices.

FIG. **8**B is a block diagram illustrating one example of a Raman wavelength shifter **820** capable of shifting a shorter pump signal **830** wavelength to a longer output signal wavelength **832**. In this example, Raman wavelength shifter **820** operates to generate an optical signal wavelength **832** of 1.7 microns or more. In various embodiments, Raman wavelength shifter **820** operates to generate an optical signal wavelength **832** in the mid-IR wavelength range. In other embodiments, Raman wavelength shifter **820** operates to generate an optical signal wavelength **832** a wavelength in the five (5) to seven (7) micron range. In various embodiments, pump signal **830** can comprise, for example, a 1310 nanometer (nm) wavelength, 1390 nm wavelength, 1510 nm wavelength, or other optical signal wavelength.

In this example, Raman wavelength shifter **820** includes a reflector **822**, a gain fiber **824**, a pump input coupler **826**, and a wavelength separator **828**. In various embodiments, the structure and function of reflector **822**, gain fiber **824**, coupler **826**, and separator **828** can be substantially similar to reflector **802**, gain fiber **804**, coupler **806**, and separator **808** of FIG. **8**A, respectively. In this particular embodiment, at least a portion of gain fiber **824** can comprise a chalcogenide fiber.

Raman wavelength shifter **820** may also include at least a first selecting element **825***a* and a second selecting element **825***b*. Although this example may also include two selecting elements **825***a* and **825***b*, any number of selecting elements can be used without departing from the scope of the present disclosure. Selecting elements **825***a* and **825***b* can comprise any device, such as a dielectric grating or one or more Fabry Perot filters. Each selecting element operates to transmit a portion of a desired wavelength to be output from Raman wavelength shifter **820**. In addition, each selecting element **825***a* and **825***b* operates to at least partially reflect a desired wavelength to gain medium **824** to allow wavelength shifter **820** to continue lasing at the desired wavelength or wavelengths. In this particular embodiment, an optical cavity is formed between reflector **822** and selecting element **825***a* and/or selecting element **825***b*.

FIG. **8**C is a block diagram illustrating one example of a Raman wavelength shifter **840** capable of shifting a shorter pump signal **850** wavelength to a longer output signal wavelength **852**. In this example, Raman wavelength shifter **840** operates to generate an optical signal wavelength **852** of 1.7 microns or more. In various embodiments, Raman wavelength shifter **840** operates to generate an optical signal wavelength **852** in the mid-IR wavelength range. In other embodiments, Raman wavelength shifter **840** operates to generate an optical signal wavelength **852** a wavelength in the five (5) to seven (7) micron range. In various embodiments, pump signal **850** can comprise, for example, a 980 nanometer (nm) wave-

length, a 1060 nm wavelength, a 1310 nm wavelength, a 1390 nm wavelength, a 1510 nm wavelength, or other optical signal wavelength.

In this example, Raman wavelength shifter **840** includes a gain fiber **844**, a pump input coupler **846**, and selecting elements **845**. In various embodiments, the structure and function of gain fiber **844**, coupler **826**, selecting elements **845**, and output coupler **848** can be substantially similar to gain fiber **824**, coupler **826**, selecting elements **825**, and coupler **828** of FIG. **8**B, respectively. In this particular embodiment, at least a portion of gain fiber **824** can comprise a chalcogenide fiber.

The example illustrated in FIG. **8**C differs from the example illustrated in FIG. **8**B in that wavelength shifter **840** implements a plurality of reflective gratings **847***a*-**847***n* each centered on a different wavelength of a reflection band. Although this example includes three gratings, any number of gratings can be used without departing from the scope of the present disclosure. Gratings **847***a*-**847***n* can comprise any device, such as a high-reflectivity dielectric grating. In this particular example, each grating **847***a*-**847***n* comprises a grating with a reflectivity between ninety-five (95) to one hundred (100) percent at the center wavelength. Gratings **847***a*-**847***n* operate to facilitate cascading of pump signal **850** to a desired output wavelength. In this particular embodiment, an optical cavity is formed between selecting elements **845** and gratings **847**.

FIG. **8**D is a block diagram illustrating one example of a Raman wavelength shifter **860** capable of shifting a shorter pump signal **870** wavelength to a longer output signal wavelength **832**. In this example, Raman wavelength shifter **860** operates to generate an optical signal wavelength **872** of 1.7 microns or more. In various embodiments, Raman wavelength shifter **860** operates to generate an optical signal wavelength **872** in the mid-IR wavelength range. In other embodiments, Raman wavelength shifter **860** operates to generate an optical signal wavelength **872** a wavelength in the five (5) to seven (7) micron range. In various embodiments, pump signal **870** can comprise, for example, a 980 nm wavelength, a 1060 nm wavelength, a 1310 nm wavelength, a 1390 nm wavelength, a 1510 nm wavelength, or other optical signal wavelength.

In this example, Raman wavelength shifter **860** includes a gain fiber **864**, a pump input coupler **866**, electing elements **864**, reflective gratings **867**, and an output coupler **868**. In various embodiments, the structure and function of gain fiber **864**, input coupler **866**, elements **864**, gratings **867**, and output coupler **868** can be substantially similar to gain fiber **844**, coupler **846**, elements **845**, gratings **847**, and coupler **848** of FIG. **8**C, respectively. Although example elements are illustrated, Raman wavelength shifter **860** may include some, none, or all of these elements. For example, in some embodiments, pump input coupler **866** and/or output coupler **868** may be optional.

The example illustrated in FIG. **8**D differs from the example illustrated in FIG. **8**C in that wavelength shifter **860** implements a Q-switcher **863** capable of transitioning from a reflective state to a transmissive state. Q-switcher **863** can comprise a device or combination of devices having a variable loss. For example, Q-switcher may comprise one or more moving mirrors, electro-optic switches, saturable absorbers, or a combination of these or other optical devices. In some cases, Q-switcher **863** can initially operate as a reflective mirror so that optical signal energy may build-up within the laser cavity. After the laser cavity contains a sufficient amount of optical energy, Qswitcher **863** can operate to substantially transmit the desired optical signal wavelength in the form of a relatively large pulse or burst. In various embodiments, Q-switcher **863** may be capable of providing an output signal having a pulse width in the range of two (2) nanoseconds to one hundred (100) milliseconds. In other embodiments, Q-switcher **863** may be capable of providing an output signal having a pulse repetition rate in the range of two (2) hertz to one hundred (100) megahertz.

FIGS. **9**A through **9**C are block diagrams illustrating example embodiments of pump sources that are capable of generating a pump signal for use in a Raman wavelength shifter. Although particular examples of pump sources are described in FIGS. **9**A through **9**C, any other pump source can be implemented without departing from the scope of the present disclosure.

FIG. **9**A is a block diagram illustrating one example embodiment of a pump source **900** capable of being coupled to a Raman wavelength shifter and/or a Raman oscillator. Pump source **900** can comprise any device capable of generating an optical signal at a desired wavelength and power. For example, pump source **900** can comprise a solid state laser, such a Nd:YAG or Nd:YLF laser, a semiconductor laser, a laser diode, a cladding pump fiber laser, or any combination of these or other light sources. In this example, pump source **900** comprises a high powered laser **902** coupled to a Raman oscillator or a Raman wavelength shifter, such as Raman wavelength shifters **800**, **820**, **840**, or **860** of FIGS. **8**A through **8**D.

FIG. **9**B is a block diagram illustrating one example embodiment of a pump source **920** capable of being coupled to a Raman wavelength shifter and/or a Raman oscillator. In this example, pump source **920** includes a pump laser **922** and an intermediate stage **924** capable of shifting the optical signal wavelength generated by pump laser **922** to a longer wavelength. The structure and function of laser **922** may be substantially similar to the structure and function of pump source **900** of FIG. **9**A. In this particular example, intermediate state **924** comprises a first Raman wavelength shifter **924**. In some embodiments, intermediate wavelength shifter **924** may advantageously be implemented using fused silica optical fiber.

In some embodiments, pump sources **900** and **920** may comprise a cladding-pumped fiber laser, capable of emitting a pump signal wavelength of approximately 1 micron. In those examples, pump sources **900** and **920** can be coupled to a first or auxiliary cascaded Raman oscillator or Raman wavelength shifter. In some cases, the auxiliary Raman oscillator or Raman wavelength shifter may comprise, for example, Raman wavelength shifters **800**, **820**, **840**, or **860** of FIGS. **8**A through **8**D implementing a fused silica optical fiber. Such an arrangement may be used to shift the 1 micron optical signal to approximately 2 to 2.3 microns. The 2-2.3 micron signal output from the auxiliary Raman wavelength shifter can then be shifted to a mid-IR wavelength by another cascaded Raman oscillator or Raman wavelength shifter that implements in mid-IR fiber.

FIG. **9**C is a block diagram illustrating one example embodiment of a pump source **940** capable of being coupled to a Raman wavelength shifter and/or a Raman oscillator. In this example, pump source **940** includes a pump laser **942** and a multiplexer **944** capable of combining a plurality of pump signals into a pump output signal. In this particular example, pump source **900** comprises a first laser diode **942***a* and a second laser diode **942***b* each centered at a desired wavelength and capable of generating pump signals **943***a* and **943***b*. Although this example includes two laser diodes, any number of laser diodes may be used without departing from the scope of the present disclosure. In various embodiments,

laser diodes **942***a* and **942***b* can be centered on substantially the same wavelength, such as 980 nm, 1310 nm, 1390 nm, 14xx nm, or 1510 nm. In this particular embodiment, pump signals **943***a* and **943***b* are combined by multiplexer **944**. Multiplexer **944** can comprise any device capable of combining pump signals **943**, such as a wavelength division multiplexer. In various embodiments, multiplexer **944** can be capable of polarization and/or wavelength multiplexing pump signals **943***a* and **943***b* to form a pump output signal.

In some embodiments, a Raman wavelength shifter, such as those illustrated in FIGS. **8**A through **8**D, may be used to deliver an optical signal wavelength directly to the patient. In other embodiments, a second mid-IR waveguide structure, that at least partially transmits in at least a portion of the mid-IR wavelength range, may be coupled to the output of the Raman wavelength shifter to deliver the optical signal wavelength to the patient. Coupling a second mid-IR waveguide structure to the Raman wavelength shifter can advantageously allow the delivery waveguide structure to be disposed after use within the patient. In addition, coupling a second mid-IR waveguide structure can substantially reduce the chance of breaking a fiber associated with a Raman wavelength shifter. Furthermore, it may be desirable to couple a tapered end or lens on the delivery fiber for improved focusing of optical signal on the patient.

In various embodiments, an optical signal wavelength is capable of being delivered to a medical device inserted into a patient using a waveguide structure having a relatively low coupling loss. In some cases, the waveguide structure maintain the coupling loss to, for example, 5 dB or less, 3 dB or less, or even less than 1 dB.

Although the present invention has been described with several embodiments, a multitude of changes, substitutions, variations, alterations, and modifications may be suggested to one skilled in the art, and it is intended that the invention encompass all such changes, substitutions, variations, alterations, and modifications as fall within the spirit and scope of the appended claims.

What is claimed is:

1. A diagnostic system comprising:

a light source comprising:

a plurality of semiconductor diodes with light beams;

a multiplexer capable of combining the plurality of semiconductor diode light beams and generating at least a multiplexed light beam comprising one or more wavelengths;

one or more waveguide structures configured to receive at least a portion of the one or more wavelengths and to communicate at least the portion of the one or more wavelengths to an output end of the one or more waveguide structures to form an output beam; and

a lens system configured to receive at least a portion of the output beam and to communicate at least the portion of the output beam onto a part of a user's body comprising blood to perform a measurement on a user;

a software application capable of generating data based at least in part on the measurement on the user, wherein the data represents at least in part physiological information associated with the user;

the software application capable of operating on a control system adapted to receive, store and process at least a portion of the physiological information, the control system having a touch-screen, a proximity sensor, and a wireless transceiver to transmit wireless data over a wireless link, the wireless data comprising at least a part of the physiological information, wherein the control system is further capable of receiving voice input signals and manually entered input signals; and

a host comprising:

a digital file for receiving and storing at least a portion of the wireless data;

control logic at the host to process at least the portion of the wireless data to generate a status of the user;

a memory storage device for recording the status; and

an output for communicating at least a portion of the status or associated information over a communication link to one or more display output devices, wherein the one or more display output devices are located remotely from the host.

2. The diagnostic system of claim **1**, wherein at least the portion of the output beam is adapted for use in a diagnostics to measure a property of the blood, wherein the diagnostics comprise a spectroscopic procedure, wherein the spectroscopic procedure is based at least in part on a comparison of amplitudes at a plurality of associated wavelengths transmitted or reflected from the blood.

3. The diagnostic system of claim **1**, wherein the control system is further capable of providing feedback control data associated at least in part with the physiological information or a position information to a device control module.

4. The diagnostic system of claim **1**, wherein the control system is further coupled to a headset or a heads-up display.

5. The diagnostic system of claim **1**, wherein the control logic includes voice recognition software to process at least a portion of the voice input signals, and wherein the control system further comprises a voice recognition module.

6. The diagnostic system of claim **1**, wherein the control system is further coupled to an audio output device capable of communicating at least a part of the processed portion of the physiological information.

7. A diagnostic system comprising:

a light source comprising:

one or more semiconductor diodes generating an input light beam; and

a lens system configured to receive at least a portion of the input light beam and to communicate at least the portion of the input light beam onto a part of a user's body comprising blood, wherein at least the portion of the input light beam is used in a measurement on a user;

a software application capable of generating data based at least in part on the measurement on the user, wherein the data represents at least in part physiological information associated with the user;

the software application capable of operating on a control system adapted to receive, store and process at least a portion of the physiological information, the control system having a touch-screen, circuitry for obtaining position information from a location sensor, and a wireless transceiver to transmit wireless data over a wireless link, the wireless data comprising at least a part of the physiological information, wherein the control system is further capable of receiving voice input signals and manually entered input signals; and

a host comprising:

a digital file for receiving and storing at least a portion of the wireless data;

control logic at the host to process at least the portion of the wireless data to generate a status of the user;

a memory storage device for recording the status; and

an output for communicating at least a portion of the status or associated information over a communication link to one or more display output devices,

wherein the one or more display output devices are located remotely from the host.

8. The diagnostic system of claim **7**, wherein the light source comprises a plurality of semiconductor diodes that are further coupled to a multiplexer capable of combining the plurality of semiconductor diodes and generating the input light beam comprising one or more wavelengths.

9. The diagnostic system of claim **7**, wherein at least the portion of the input light beam is adapted for use in a diagnostics to measure a property of the blood, wherein the diagnostics comprise a spectroscopic procedure, wherein the spectroscopic procedure is based at least in part on a comparison of amplitudes at a plurality of associated wavelengths transmitted or reflected from the blood.

10. The diagnostic system of claim **7**, wherein the control system is further coupled to a headset or a heads-up display.

11. The diagnostic system of claim **7**, wherein the control logic includes voice recognition software to process at least a portion of the voice input signals, and wherein the control system further comprises a voice recognition module.

12. The diagnostic system of claim **7**, wherein the control system is further capable of providing feedback control data associated at least in part with the physiological information or the position information to a device control module.

13. The diagnostic system of claim **7**, wherein the control system is further coupled to a proximity sensor.

14. The diagnostic system of claim **7**, wherein the control system is further coupled to an audio output device capable of communicating at least a part of the processed portion of the physiological information.

15. A diagnostic system comprising:

a light source comprising:

one or more semiconductor diodes generating an input light beam; and

a lens system configured to receive at least a portion of the input light beam and to communicate at least the portion of the input light beam onto a part of a user's body comprising blood, wherein at least the portion of the input light beam is used in a measurement on a user, wherein the measurement comprises a spectroscopic procedure to measure a property of the blood, and wherein the spectroscopic procedure is based at least in part on a comparison of amplitudes at a plurality of associated wavelengths transmitted or reflected from the blood;

a software application capable of generating data based at least in part on the measurement on the user, wherein the data represents at least in part physiological information associated with the user;

the software application capable of operating on a control system adapted to receive, store and process at least a portion of the physiological information, the control system having a touch-screen, circuitry for obtaining position information from a location sensor, and a wireless transceiver to transmit wireless data over a wireless link, the wireless data comprising at least a part of the physiological information, wherein the control system is further capable of receiving voice input signals and manually entered input signals, and wherein the control system is further coupled to an audio output device; and

a host comprising:

a digital file for receiving and storing at least a portion of the wireless data;

control logic at the host to process at least the portion of the wireless data to generate a status of the user, wherein the control logic includes a voice recognition software to process at least a portion of the voice input signals;

a memory storage device for recording the status; and

an output for communicating at least a portion of the status or associated information over a communication link to one or more display output devices, wherein the one or more display output devices are located remotely from the host.

16. The diagnostic system of claim **15**, wherein the control system is further coupled to a headset or a heads-up display.

17. The diagnostic system of claim **16**, wherein gesture signals are capable of being generated in response to a head motion.

18. The diagnostic system of claim **15**, wherein the control system is further coupled to a proximity sensor.

19. The diagnostic system of claim **15**, wherein the host is adapted to permit access of the status or associated information stored on the host from two or more different locations remote from the host.

20. The diagnostic system of claim **15**, wherein the control system is further capable of providing feedback control data associated at least in part with the physiological information or the position information to a device control module.

* * * * *