Trials@uspto.gov
Tel: 571-272-7822

Paper 26
Entered: June 14, 2021

UNITED STATES PATENT AND TRADEMARK OFFICE

BEFORE THE PATENT TRIAL AND APPEAL BOARD

APPLE INC.,
Petitioner,

v.

OMNI MEDSCI, INC.,
Patent Owner.

IPR2020-00175
Patent 10,188,299 B2

Before GRACE KARAFFA OBERMANN, JOHN F. HORVATH, and SHARON FENICK, *Administrative Patent Judges.*

Opinion for the Board filed by *Administrative Patent Judge* FENICK.

Opinion Concurring filed by *Administrative Patent Judge* HORVATH.

JUDGMENT
Final Written Decision
Determining All Challenged Claims Unpatentable
35 U.S.C. § 318(a)

I. INTRODUCTION

A. Background

Apple Inc. ("Petitioner") filed a Petition requesting *inter partes* review of claims 7 and 10–14 ("the challenged claims") of U.S. Patent No. 10,188,299 B2 (Ex. 1001, "the '299 patent"). Paper 1 ("Pet."), 3. Omni MedSci Inc. ("Patent Owner") filed a Preliminary Response. Paper 6 ("Prelim. Resp."). After considering the Petition, Preliminary Response, and additional briefing, we instituted *inter partes* review of all challenged claims on all grounds raised. Paper 11 ("Dec. Inst.").

Patent Owner filed a Response to the Petition (Paper 13, "PO Resp."), Petitioner filed a Reply (Paper 15, "Pet. Reply"), and Patent Owner filed a Sur-reply (Paper 18, "PO Sur-reply"). An oral hearing was held on March 25, 2021, and the hearing transcript is included in the record. *See* Paper 25 ("Tr.").

We have jurisdiction under 35 U.S.C. § 6(b)(4). This is a Final Written Decision under 35 U.S.C. § 318(a) and 37 C.F.R. § 42.73. For the reasons set forth below, we find Petitioner has shown by a preponderance of evidence that claims 7 and 10–14 of the '299 patent are unpatentable.

B. Real Parties-in-Interest

Petitioner and Patent Owner each identifies only itself as a real party-in-interest. Pet. x; Paper 4, 1.

C. Related Matters

Petitioner and Patent Owner identify the following as matters that could affect or be affected by a decision in this proceeding:

Issued patents: U.S. Patent No. 9,651,533 and U.S. Patent No. 9,164,032.

Litigation: *Omni MedSci, Inc. v. Apple Inc.*, Action No. 2-19-cv-05673-YGR (N.D. Cal.); *Omni MedSci, Inc. v. Apple Inc.*, Action No. 2-19-cv-05924 (N.D. Cal.); *Omni MedSci, Inc. v. Apple Inc.*, Action No. 2-18-cv-00429-RWS (E.D. Tex.) (terminated); and *Omni MedSci, Inc. v. Apple Inc.*, Action No. 2-18-cv-00134-RWS (E.D. Tex.) (terminated).

Inter partes review proceedings: IPR2019-00913 (terminated) and IPR2019-00916 (instituted).

See Pet. xii–xiii; Paper 4, 1–2.

D. Overview of the '299 Patent

The '299 patent was filed on May 12, 2017, and claims priority to a utility application filed on December 17, 2013 and a provisional application filed on December 31, 2012. Ex. 1001, codes (22), (60), (63), 1:7–13. The '299 patent is directed to a system for measuring physiological parameters. *Id.* at code (54).

The system, in one embodiment, includes a wearable measurement device for measuring physiological parameters. *Id.* at 6:48–50. This measurement device includes a light source including multiple semiconductor sources configured to generate an output optical beam in which a portion of the wavelengths of the output optical beam are of a near-infrared wavelength between 700 and 2500 nanometers. *Id.* at 6:50–55. A portion of this output optical beam is delivered to a sample and some portion of the beam reflected from or transmitted through the sample is received and processed. *Id.* at 6:55–63.

A system including a wearable device is depicted in Figure 24 of the '299 patent, which is reproduced below.

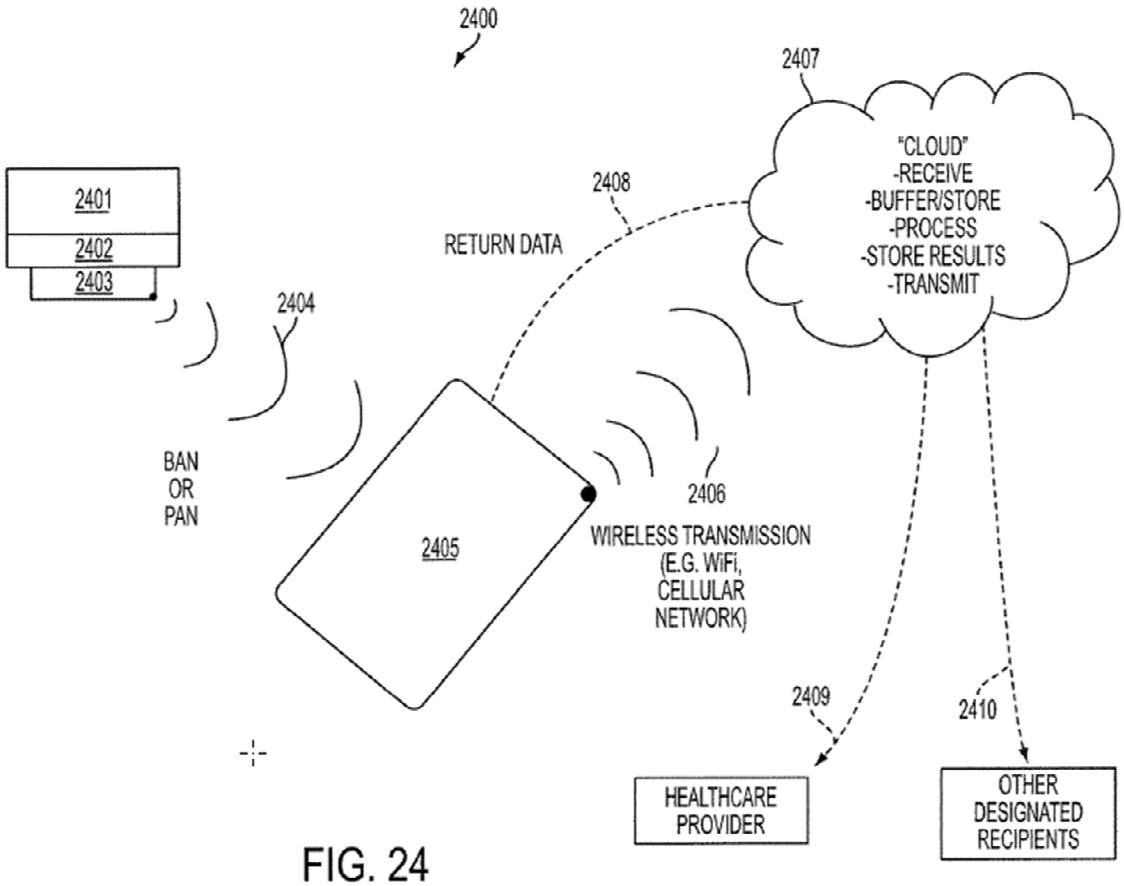

FIG. 24

Figure 24 is a schematic illustration of a medical measurement device that is part of a personal or body area network. *Id.* at 8:25–30. Wearable measurement device 2401 is a physiological measurement or blood constituent measurement device that includes processor 2402 and transmitter 2403. *Id.* at 30:16–19. Communication link 2404 allows communication between measurement device 2401 and personal device 2405. *Id.* at 30:16–22. Personal device 2405, which may be a smart phone, optionally has a receiver, a transmitter, a display, a voice control, a speaker, one or more buttons or knobs, and/or a touch screen. *Id.* at 30:39–43. Personal device 2405 stores, processes, displays, and transmits at least a portion of the output signal generated by wearable measurement device 2401. *Id.* at 30:37–39. Personal device 2405 also transmits some of the data or the processed output

signal over a wireless transmission link to internet or "cloud" 2407. *Id.* at 30:46–49. Internet or cloud 2407 may provide services including storage, processing, and retransmission of data to the originator or to another designated recipient such as a health care provider or doctor. *Id.* at 30:55–67.

The light source of the measurement device can increase a signal-to-noise ratio by increasing either the LED intensity or pulse rate. *Id.* at code (57), 3:11–16. Additionally, "change detection schemes may be used, where the detection system captures the signal with the light source on and with the light source off. . . . Then, the signal with and without the light source is differenced. This may enable the sun light changes to be subtracted out." *Id.* at 29:13–18.

E. Illustrative Claims

Claim 7 of the '299 patent is the sole independent claim of the challenged claims and is reproduced below, with one limitation (the "pulse rate limitation") italicized for emphasis.

> 7. A system for measuring one or more physiological parameters comprising:
>
> a light source comprising a plurality of semiconductor sources that are light emitting diodes, each of the light emitting diodes configured to generate an output optical beam having one or more optical wavelengths, wherein at least a portion of the one or more optical wavelengths is a near-infrared wavelength between 700 nanometers and 2500 nanometers;
>
> a lens configured to receive a portion of at least one of the output optical beams and to deliver a lens output beam to tissue;
>
> a detection system configured to receive at least a portion of the lens output beam reflected from the tissue and to generate an output signal having a signal-to-noise ratio, wherein the

detection system is configured to be synchronized to the light source;

a personal device comprising a wireless receiver, a wireless transmitter, a display, a microphone, a speaker, one or more buttons or knobs, a microprocessor and a touch screen, the personal device configured to receive and process at least a portion of the output signal, wherein the personal device is configured to store and display the processed output signal, and wherein at least a portion of the processed output signal is configured to be transmitted over a wireless transmission link;

a remote device configured to receive over the wireless transmission link an output status comprising the at least a portion of the processed output signal, to process the received output status to generate processed data, and to store the processed data;

wherein the output signal is indicative of one or more of the physiological parameters, and the remote device is configured to store a history of at least a portion of the one or more physiological parameters over a specified period of time;

the system configured to increase the signal-to-noise ratio by increasing light intensity of at least one of the plurality of semiconductor sources from an initial light intensity and *by increasing a pulse rate of at least one of the plurality of semiconductor sources from an initial pulse rate*; and

the detection system further configured to:

generate a first signal responsive to light received while the light emitting diodes are off,

generate a second signal responsive to light received while at least one of the light emitting diodes is on, and

increase the signal-to-noise ratio by differencing the first signal and the second signal.

Ex. 1001, 33:29–34:11, Certificate of Correction.

Claims 10 and 11 depend from claim 7, claim 12 depends from claim 11, claim 13 depends from claim 12, and claim 14 depends from claim 13. *Id*. at 34:21–37.

F. Evidence

Reference		**Date**	**Exhibit**
Mannheimer	US 5,746,206	May 5, 1998	1008
Lisogurski et al.	US 9,241,676 B2	May 31, 2012	1011
Park et al.	US 9,596,990 B2	Nov. 6, 2013	1010
Carlson et al.	US 2005/0049468 A1	Mar. 3, 2005	1009

Petitioner also relies upon the Declaration of Brian Anthony, Ph.D. (Ex. 1003). Patent Owner relies upon two declarations of Duncan L. MacFarlane, Ph.D., P.E. (Ex. 2122; Ex. 2131). Petitioner cross-examined Dr. MacFarlane by deposition. Ex. 1065.

G. Asserted Grounds of Unpatentability

Petitioner asserts that the challenged claims would have been unpatentable on the following grounds:

Claims Challenged	**35 U.S.C. §[1]**	**References**
7, 11–13	103	Lisogurski, Carlson
12, 13	103	Lisogurski, Carlson, Mannheimer
10, 14	103	Lisogurski, Carlson, Park

[1] The Leahy-Smith America Invents Act, Pub. L. No. 112-29, 125 Stat. 284 (2011), amended 35 U.S.C. § 103 effective March 16, 2013. Because the ’299 patent claims priority to a provisional filed prior to the effective date of the applicable AIA amendment, we refer to the pre-AIA version of § 103.

Claims Challenged	35 U.S.C. §[1]	References
14[2]	103	Lisogurski, Carlson, Park, Mannheimer

II. ANALYSIS

A. Legal Standards

It is a petitioner's burden to demonstrate unpatentability. *See Dynamic Drinkware, LLC v. Nat'l Graphics, Inc.*, 800 F.3d 1375, 1378 (Fed. Cir. 2015) (citing *Tech. Licensing Corp. v. Videotek, Inc.*, 545 F.3d 1316, 1326–27 (Fed. Cir. 2008)).

A claim is unpatentable as obvious if "the differences between the claimed invention and the prior art are such that the subject matter as a whole would have been obvious at the time the invention was made to a person having ordinary skill in the art to which said subject matter pertains." 35 U.S.C. § 103(a) (2012). The question of obviousness is resolved on the basis of underlying factual determinations, including: (1) the scope and content of the prior art; (2) any differences between the claimed subject matter and the prior art; (3) the level of skill in the art; and (4) objective evidence of nonobviousness.[3] *Graham v. John Deere Co. of Kansas City*, 383 U.S. 1, 17–18 (1966).

---

[2] Although Petitioner styles this ground as relating to both claims 10 and 14, claim 10 depends from claim 7, and the Petition does not provide any indication of what portion of claims 7 or 10 Petitioner asserts is taught or suggested by Mannheimer. Pet. 3, 60–66, 70; Inst. Dec. 3. Accordingly, we treat this ground as directed solely to claim 14.

[3] No argument or evidence concerning secondary considerations has been adduced in the current record.

Even if prior art references disclose all claim limitations when combined, there must be evidence to explain why a person of ordinary skill in the art would have combined the references to arrive at the claimed invention. *Kinetic Concepts, Inc. v. Smith & Nephew, Inc.*, 688 F.3d 1342, 1366–67 (Fed. Cir. 2012) (citing *Innogenetics, N.V. v. Abbott Labs.*, 512 F.3d 1363, 1374 (Fed. Cir. 2008) (holding that "some kind of motivation must be shown from some source, so that the [trier of fact] can understand why a person of ordinary skill would have thought of either combining two or more references or modifying one to achieve the patented [invention]")). An invention "composed of several elements is not proved obvious merely by demonstrating that each of its elements was, independently, known in the prior art." *KSR Int'l Co. v. Teleflex Inc.*, 550 U.S. 398, 418 (2007). Rather, "it can be important to identify a reason that would have prompted a person of ordinary skill in the relevant field to combine the elements in the way the claimed new invention does." *Id.*

An obviousness determination "cannot be sustained by mere conclusory statements; instead, there must be some articulated reasoning with some rational underpinning to support the legal conclusion of obviousness." *Id.* (quoting *In re Kahn*, 441 F.3d 977, 988 (Fed. Cir. 2006)); *see In re Magnum Oil Tools Int'l, Ltd.*, 829 F.3d 1364, 1380 (Fed. Cir. 2016).

B. Level of Ordinary Skill in the Art

Petitioner, relying on the testimony of Dr. Anthony, identifies a person of ordinary skill in the art ("POSITA") as someone who "would have [had] a good working knowledge of optical sensing techniques and their applications, and familiarity with optical system design and signal

processing techniques." Pet. 15; Ex. 1003 ¶ 37. Such a person would have obtained such knowledge through "an undergraduate education in engineering (electrical, mechanical, biomedical, or optical) or a related field of study, along with relevant experience studying or developing physiological monitoring devices . . . in industry or academia." Pet. 15–16. Patent Owner does not comment on this definition or provide an alternative definition of a person of ordinary skill.

We find Petitioner's undisputed definition of the person of ordinary skill in the art to be consistent with the problems and solutions disclosed in the patent and prior art of record, and adopt it as our own. *See, e.g.*, *In re GPAC Inc.*, 57 F.3d 1573, 1579 (Fed. Cir. 1995).

C. Claim Construction

In *inter partes* reviews, we interpret a claim "using the same claim construction standard that would be used to construe the claim in a civil action under 35 U.S.C. 282(b)." 37 C.F.R. § 42.100(b) (2019). Under this standard, we construe the claim "in accordance with the ordinary and customary meaning of such claim as understood by one of ordinary skill in the art and the prosecution history pertaining to the patent." *Id.* Only claim terms that are in controversy need to be construed and only to the extent necessary to resolve the controversy. *See Nidec Motor Corp. v. Zhongshan Broad Ocean Motor Co.*, 868 F.3d 1013, 1017 (Fed. Cir. 2017).

Initially, Petitioner requested construction of the terms "beam" and "lens," and Patent Owner, in the Preliminary Response, requested construction of the pulse rate limitation. Pet. 18–19; Prelim. Resp. 10. In the Decision on Institution we determined that, for the purposes of

institution, no constructions were necessary. Dec. Inst. 18–19 (citing *Nidec*, 868 F.3d at 1017).

In its Response, Patent Owner contends that no claim construction is necessary for any term. PO Resp. 10. Petitioner does not further address the construction of "beam" or "lens" in its Reply, but does obliquely address the construction of the pulse rate limitation, casting Patent Owner's arguments regarding patentability as "impos[ing] special requirements for how the claimed devices increase signal-to-noise ratio [SNR]." Reply 1. However, Petitioner does not describe or request a specific construction for the pulse rate limitation. *Id.* We address the parties' arguments relating to the pulse rate limitation below, at Section II.D.2.i. With respect to claim construction, however, we determine that no constructions of "beam," "lens," or the pulse rate limitation are necessary to resolve the controversy before us.

D. Patentability of Claims 7, 11, 12, and 13 over Lisogurski and Carlson

Petitioner argues claims 7 and 11 are unpatentable over the combination of Lisogurski and Carlson. Pet. 20–60. Patent Owner argues that Lisogurski does not teach or suggest the pulse rate limitation. PO Resp. 11–18; PO Sur-reply 1–11.

1. Overview of the Prior Art

a) Lisogurski

Lisogurski discloses a "physiological monitoring system [that] monitor[s] one or more physiological parameters of a patient . . . using one or more physiological sensors." Ex. 1011, 3:44–46. The physiological sensors may include a "pulse oximeter [that] non-invasively measures the oxygen saturation of a patient's blood." *Id.* at 3:62–64. The pulse oximeter includes "a light sensor that is placed at a site on a patient, typically a

fingertip, toe, forehead, or earlobe." *Id.* at 4:6–7. The light sensor "pass[es] light through blood perfused tissue and photoelectrically sense[s] the absorption of the light in the tissue." *Id.* at 4:8–11. The light sensor emits "one or more wavelengths [of light] that are attenuated by the blood in an amount representative of the blood constituent concentration," and may include red and infrared (IR) wavelengths of light. *Id.* at 4:42–48. Figure 3 of Lisogurski is reproduced below.

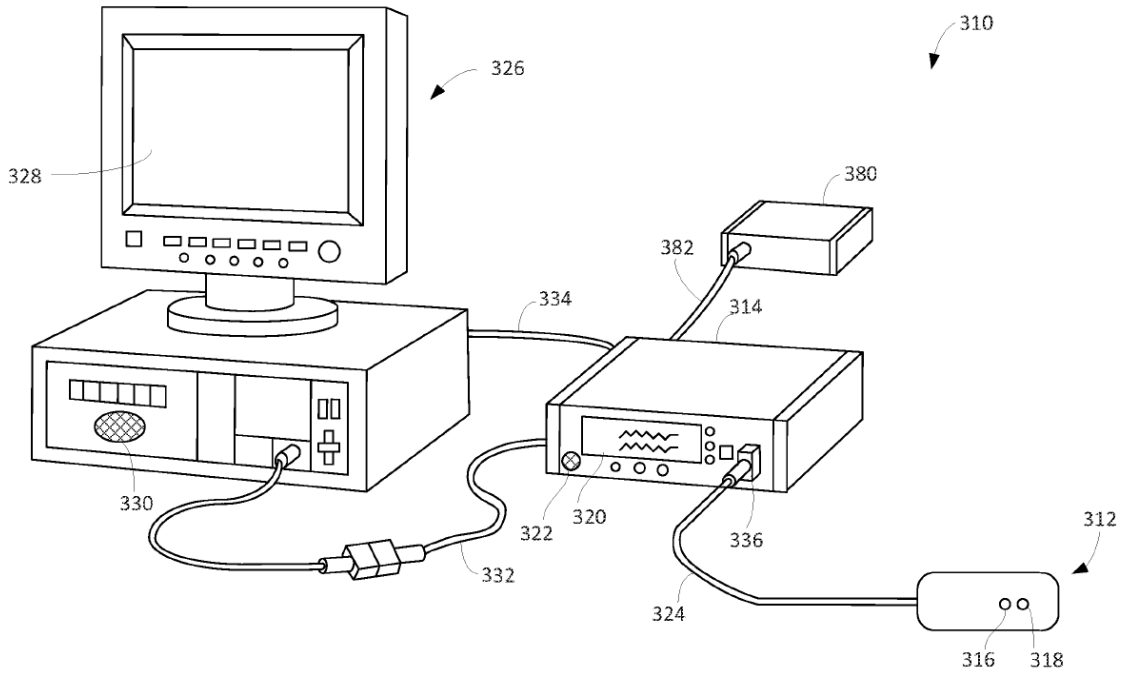

FIG. 3

Figure 3 of Lisogurski is "a perspective view of a physiological monitoring system." *Id.* at 2:23–25. The system includes sensor 312, monitor 314, and multi-parameter physiological monitor 326. *Id.* at 17:35–36, 18:44–45. Sensor 312 includes "one or more light sources 316 for emitting light at one or more wavelengths," and detector 318 for "detecting the light that is reflected by or has traveled through the subject's tissue." *Id.* at 17:37–42. Sensor 312 may have "[a]ny suitable configuration of light

source 316 and detector 318," and "may include multiple light sources and detectors [that] may be spaced apart." *Id.* at 17:42–45. Light source 316 may include "LEDs of multiple wavelengths, for example a red LED and an IR [LED]." *Id.* at 19:25–27. Sensor 312 may be "wirelessly connected to monitor 314." *Id.* at 17:57–59.

Monitor 314 "calculate[s] physiological parameters based at least in part on data relating to light emission . . . received from one or more sensor units such as sensor unit 312." *Id.* at 17:59–62. Monitor 314 includes "display 320 . . . to display the physiological parameters," and "speaker 322 to provide an audible . . . alarm in the event a subject's physiological parameters are not within a predefined normal range." *Id.* at 18:3–10. Monitor 314 is "communicatively coupled to multi-parameter physiological monitor 326" ("MPPM 326") and "may communicate wirelessly" with MPPM 326. *Id.* at 18:58–61. Monitor 314 may also be "coupled to a network to enable the sharing of information with servers or other workstations." *Id.* at 18:62–65.

Multi-parameter physiological monitor 326 may also "calculate physiological parameters and . . . provide a display 328 for information from monitor 314." *Id.* at 18:49–52. MPPM 326 may also be "coupled to a network to enable the sharing of information with servers or other workstations." *Id.* at 18:62–65. The remote network servers may also "be used to determine physiological parameters," and may display the parameters on a remote display, display 320 of monitor 314, or display 328 of MPPM 326. *Id.* at 20:53–58. The remote servers may also "publish the data to a server or website," or otherwise "make the parameters available to a user." *Id.* at 20:58–60.

Lisogurski discloses that the monitoring system shown in Figure 3, described above, "may include one or more components of physiological monitoring system 100 of FIG. 1." *Id.* at 17:32–35. Lisogurski further discloses that although "the components of physiological monitoring system 100 . . . are shown and described as separate components. . . . the functionality of some of the components may be combined in a single component," and "the functionality of some of the components . . . may be divided over multiple components." *Id.* at 15:66–16:8. Figure 1 of Lisogurski is reproduced below.

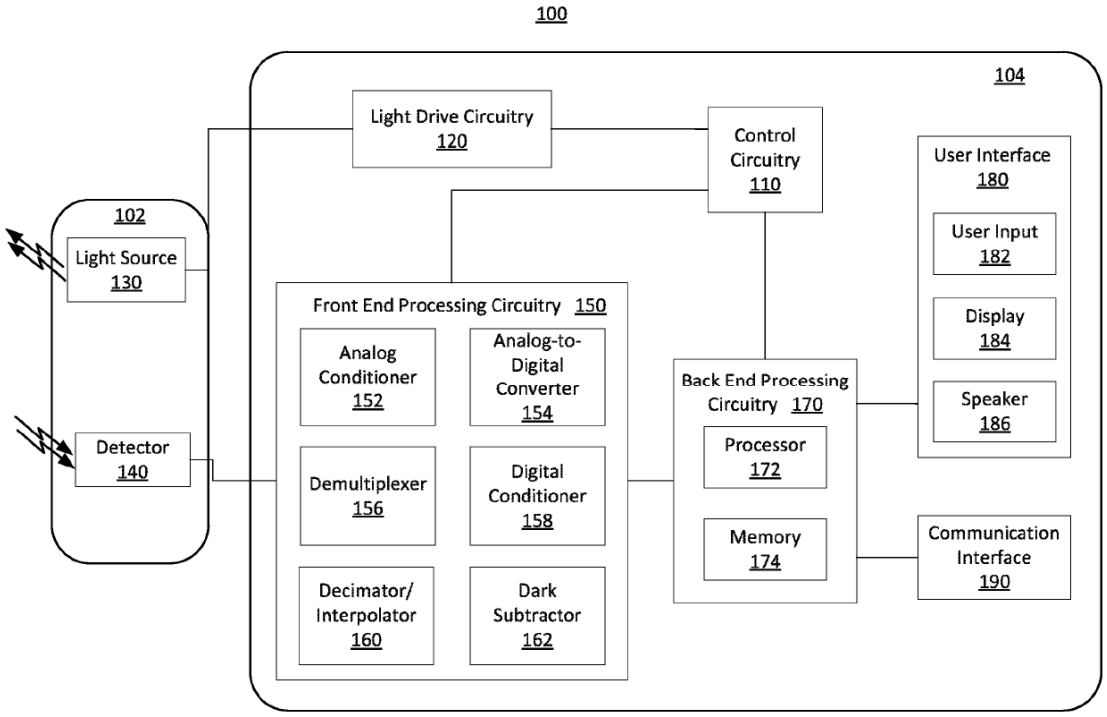

FIG. 1

Figure 1 of Lisogurski is a "block diagram of an illustrative physiological monitoring system." *Id.* at 2:11–13. The system includes "sensor 102 and monitor 104 for generating and processing physiological signals of a subject." *Id.* at 10:44–46. Sensor 102 includes "light source 130 and

detector 140." *Id.* at 10:48–49. Light source 130 includes "a Red light emitting source and an IR light emitting source," such as Red and IR emitting LEDs, with the IR LED emitting light with a "wavelength [which] may be between about 800 nm and 1000 nm." *Id.* at 10:52–58. Detector 140 "detect[s] the intensity of light at the Red and IR wavelengths," converts them to an electrical signal, and "send[s] the detection signal to monitor 104, where the detection signal may be processed and physiological parameters may be determined." *Id.* at 11:9–10, 11:20–23.

Monitor 104 includes user interface 180, communication interface 190, and control circuitry 110 for controlling (a) light drive circuitry 120, (b) front end processing circuitry 150, and (c) back end processing circuitry 170 via "timing control signals." *Id.* at 11:33–38, Fig. 1. Light drive circuitry 120 "generate[s] a light drive signal . . . used to turn on and off the light source 130, based on the timing control signals." *Id.* at 11:38–41. The light drive signal "control[s] the intensity of light source 130 and the timing of when the light source 130 is turned on and off." *Id.* at 11:50–54. Front end processing circuitry 150 "receive[s] a detection signal from detector 140 and provides one or more processed signals to back end processing circuitry 170." *Id.* at 12:42–45. Front end processing circuitry 150 also "synchronize[s] the operation of an analog-to-digital converter and a demultiplexer with the light drive signal based on the timing control signals." *Id.* at 11:43–46.

Back end processing circuitry 170 "use[s] the timing control signals to coordinate its operation with front end processing circuitry 150." *Id.* at 11:46–49. Backend processing circuitry 170 includes processor 172 and memory 174, and "receive[s] and process[es] physiological signals received

from front end processing circuitry 150" in order to "determine one or more physiological parameters." *Id.* at 14:56–57, 14:60–64. Backend processing circuitry 170 is "communicatively coupled [to] use[r] interface 180 and communication interface 190." *Id.* at 15:16–18. User interface 180 includes "user input 182, display 184, and speaker 186," and may include "a keyboard, a mouse, a touch screen, buttons, switches, [and] a microphone." *Id.* at 15:19–22. Communication interface 190 allows "monitor 104 to exchange information with external devices," and includes transmitters and receivers to allow wireless communications. *Id.* at 15:43–44, 15:48–57.

Lisogurski teaches the physiological monitoring system may modulate the light drive signal to have a "period the same as or closely related to the period of [a] cardiac cycle." *Id.* at 25:49–51. Thus, "[t]he system may vary parameters related to the light drive signal including drive current or light brightness, duty cycle, firing rate, . . . [and] other suitable parameters." *Id.* at 25:52–55. Lisogurski further teaches "the system may alter the cardiac cycle modulation technique based on the level of noise, ambient light, [and] other suitable reasons." *Id.* at 9:46–48. Thus, "[t]he system may increase the brightness of the light sources in response to [any] noise to improve the signal-to-noise ratio." *Id.* at 9:50–52. The system may also "change from a modulated light output to a constant light output in response to noise, patient motion, or ambient light." *Id.* at 9:57–60.

b) Carlson

Carlson discloses an "optical pulsoximetry [device] used for non-invasive measurement of pulsation and oxygen saturation in arterial human or animal blood." Ex. 1009 ¶ 2. The device measures the light "absorption of reduced (Hb)—and oxidized (HbO_2) h[e]moglobin at two optical

wavelengths, where the relative absorption coefficients differ significantly." *Id.* ¶ 3. Figure 2 of Carlson is reproduced below.

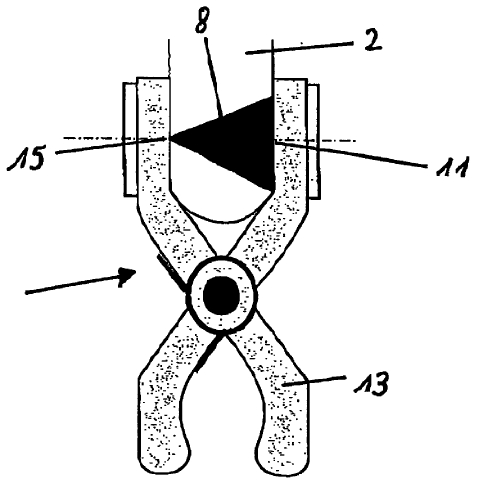

Figure 2

Figure 2 of Carlson is a schematic illustration of an ear clip sensor 1 of a pulsoximeter device. *Id.* ¶¶ 33, 49. Sensor 1 includes light source 15, which transmits light beam 8 through a patient's earlobe 2, and light detector 11 to detect the transmitted light. *Id.* ¶ 49. Light source 15 emits light at two wavelengths—660 nm and 890 nm—and can consist of two LEDs. *Id.* ¶ 50.

Carlson's pulsoximeter can be used to "survey the heath condition of a person or an animal [that] is mobile," and is "not restricted for use in, e.g., a hospital." *Id.* ¶ 72. Carlson teaches that "standard pulsoximeter sensors suffer from signal instability and insufficient robustness versus environmental disturbances." *Id.* ¶ 4. For example, when a sensor is worn by a person driving along a tree-lined avenue, the sensor will receive sunlight "at a certain frequency" such that "every time when passing a tree, sunlight is attenuated and between the trees sunlight is influencing the measurement of the pulsoximeter sensor." *Id.* ¶ 68. To address such

problems, Carlson includes "optical and/or electronic means for increasing Signal-to-Noise ratio (S/N) . . . of a pulsoximeter sensor for robust application of pulsoximetry in telemedicine- and near patient testing applications in rough (optical) environmental conditions." *Id.* ¶ 10. In particular, the LEDs in Carlson's sensor emit light "not as a current or continuous light but as pulsed light." *Id.* ¶ 69. Carlson's sensor also uses "AC-Coupling or Lock-In Amplification (synchronous detection) . . . to temporarily modulate the amplitude of the optical radiation of . . . the LED at a carrier frequency f_0 in order to shift the power spectrum of the pulsoximeter signals into a higher frequency range." *Id.* ¶ 20. Modulation frequency f_0 is selected to be "outside the frequency spectrum of sunlight and of ambient light." *Id.* ¶ 69. This allows the pulsoximeter signal to be easily discriminated from environmental signals, such as sunlight and ambient light, and "increas[es] significantly the Signal-to-Noise and Signal-to-Background ratio." *Id.*

Carlson further discloses that sensor 1 can be wirelessly connected to "a special unit worn by [a] person or patient," where "a signal is generated if [a] measured value is not within a predetermined range." *Id.* ¶¶ 77–78. The generated signal can be "transmitted to a respective person, to a medical doctor, to a hospital, etc." *Id.* ¶ 78. The pulsoximeter can also include a "GPS device which at any time gives the location of the person using the pulsoximetric sensor monitoring configuration." *Id.*

c) Petitioner's Proposed Combination

Petitioner proposes combining Lisogurski's physiological monitoring system shown in Figures 1 and 3, in which sensor 102/312 wirelessly communicates with monitor 104/314, with Carlson's teachings regarding

selecting an LED pulse frequency to increase signal-to-noise in a wireless pulse oximeter sensor. *See* Pet. 22–24, 29–31, 34–37, 50–52. Petitioner's proposed combination also relocates some of the components of Lisogurski's monitor 104/314 to sensor 102/312, as illustrated in a series of Petitioner-modified versions of Figure 1 of Lisogurski, which we combine below into a single modified version of Figure 1. *See id.* at 35, 38, 45.

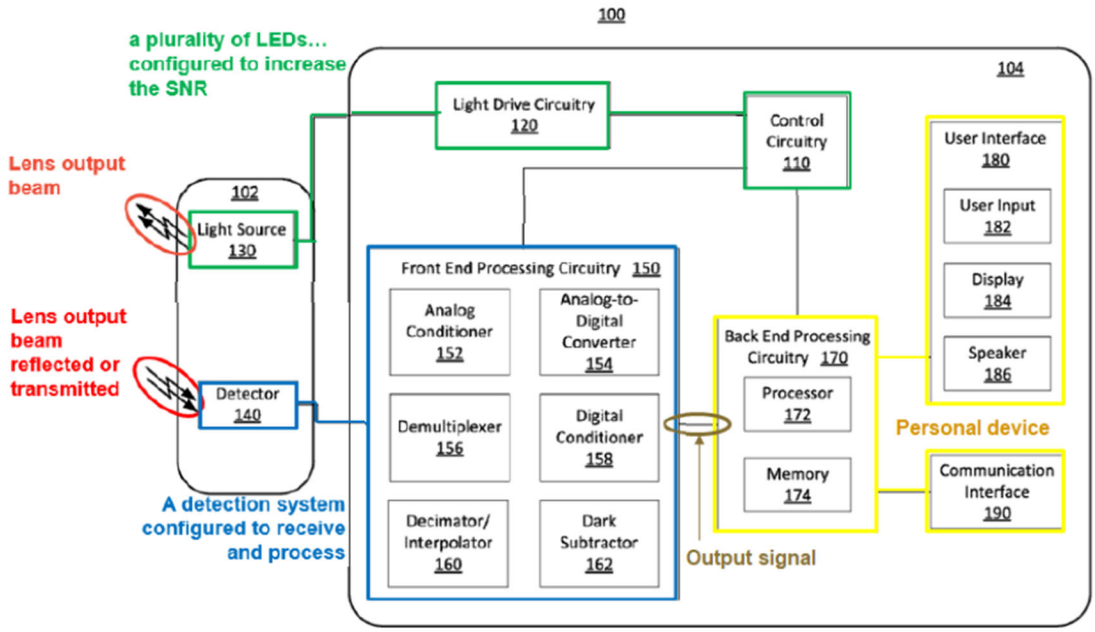

FIG. 1

Modified Figure 1 of Lisogurski demonstrates Petitioner's proposed combination, which relocates some components of monitor 104 (i.e., control circuitry 110, light drive circuitry 120, and front end processing circuitry 150) to sensor 102 as illustrated in the Petitioner-modified versions of Figure 1 provided in the Petition. *Id.*

Petitioner articulates sufficient reasoning with rational underpinning to demonstrate why a person of ordinary skill in the art would have modified Lisogurski's sensor 102/312 and monitor 104/314 in the manner proposed. *See id.* at 7–11, 34–37, 44–47 (citing/quoting Ex. 1003 ¶¶ 50–58, 109, 113–

117, 139–143; Ex. 1005 ¶ 3; Ex. 1009 ¶ 4; Ex. 1011, 11:20–27, 11:38–41, 11:50–54, 16:2–9, 17:32–35, 17:55–59, 18:16–31, 25:52–55, Fig. 1; Ex. 1020, 3, 6–7, 12; Ex. 1021, 2–4; Ex. 1022, 1; Ex. 1023, 1, 2, 5, 6; Ex. 1024, 459, 460, 462; Ex. 1027, 9, 10, 15–31, 33, 35, 40–49; Ex. 1029, 221).

First, Lisogurski expressly suggests the modification by teaching embodiments in which "the functionality of some of the components may be combined in a single component" and embodiments in which "the functionality of some of the components of monitor 104 . . . may be divided over multiple components." Ex. 1011, 16:2–4, 16:7–9. Second, numerous industry trends would have motivated the modification. These include improving the capabilities of wearable sensors for use in sports and personal fitness applications and wirelessly connecting wearable sensors to networks to remotely monitor patient health. *See* Ex. 1005 ¶ 3; Ex. 1009 ¶ 4; Ex. 1020, 3; Ex. 1021, 2–4; Ex. 1022, 1; Ex. 1024, 462, Ex. 1027, 9, 10, 15, 33, 35, 40–49; Ex. 1029, 221; *see also KSR*, 550 at 418 ("When a work is available in one field of endeavor, design incentives and other market forces can prompt variations of it . . . . If a person of ordinary skill can implement a predictable variation, § 103 likely bars its patentability."). Patent Owner does not dispute these contentions. *See* PO Resp. 10–37.

Petitioner also articulates sufficient reasoning with rational underpinning to demonstrate why a person of ordinary skill in the art would have modified Lisogurski's light source to incorporate the teachings of Carlson. *See* Pet. 22–24, 30–31, 50–52 (citing/quoting Ex. 1003 ¶¶ 50–58, 79–83, 103–104, 157–162; Ex. 1009 ¶¶ 2, 4, 10, 14, 48, 52, 67–69;

Ex. 1011, 1:4–6, 1:16–18, 1:67–2:3, 3:50–53, 4:15–20, 4:63–67, 5:55–61, 6:3–6, 9:46–60, 13:60–14:10, 14:40–55, 17:51–58, 37:6–20; Ex. 1019, 765).

Patent Owner argues that "Carlson adds nothing relevant to Lisogurski because the two references contain identically the same teaching – right down to the same exemplary 1000 Hz modulation rate" and "[a]n ordinary artisan reading Carlson would learn nothing new beyond what Lisogurski already discloses." PO Resp. 3–4 (citing Ex. 1011 6:30; Ex. 1009 ¶ 69). Patent Owner further argues that, "[i]n fact, Carlson adds less than nothing because it merely modulates, temporarily, an unmodulated light source . . . and without changing the predetermined modulation frequency." *Id.* at 3.

Lisogurski and Carlson teach complementary and combinable methods for increasing signal-to-noise in a wearable pulsoximeter in the presence of ambient light or sunlight. For example, Lisogurski "may alter the cardiac cycle modulation technique based on the level of noise, ambient light, [or] other suitable reasons." Ex. 1011, 9:46–48. In particular, Lisogurski "may increase the brightness of the light sources in response to the noise to improve the signal-to-noise ratio. In some embodiments, the system may increase brightness throughout the cardiac cycle . . . ." *Id.* at 9:50–54. Carlson includes "electronic means for increasing the Signal-to-Noise . . . in rough (optical) environmental conditions, e.g., at changing light influences, such as sunlight, shadow, artificial light, etc." Ex. 1009 ¶ 10. In particular, Carlson pulses LEDs at a "frequency [that] is chosen in such a way that it is outside the frequency spectrum of sunlight and of ambient light. . . . [thereby] increasing significantly the Signal-to-Noise." *Id.* ¶ 69.

We are not persuaded by Patent Owner's argument that one of ordinary skill would not have combined Carlson and Lisogurski because the teachings are redundant. While Patent Owner points out similarities between aspects of the two references, these similarities would have motivated the combination rather than militated against it. *See Realtime Data, LLC v. Iancu*, 912 F.3d 1368, 1372–74 (Fed. Cir. 2019) (finding a motivation to combine two references "shar[ing] striking similarities," because "a person of ordinary skill in the art would have turned to [the second reference], to better understand or interpret" the teachings of the first reference). We agree with Petitioner that a person of ordinary skill in the art would have combined the teachings of Lisogurski and Carlson because the references teach "complementary designs and techniques in analogous systems," including "techniques for achieving the same objectives" of increasing signal-to-noise in the presence of environmental noise such as ambient light or sunlight. Pet. 23 (citing Ex. 1003 ¶¶ 79–82).

2. Claim 7

a) Preamble

Claim 7 recites a system for measuring physiological parameters. Ex. 1001, 33:29–30. To the extent the preamble is a limitation, Petitioner demonstrates that Lisogurski's measurement system meets this limitation. *See* Pet. 26 (citing Ex. 1011, 1:10–25, 3:43–46, 3:61–4:3). Lisogurski describes an optical physiological monitoring system that can determine physiological parameters "such as blood oxygen saturation, hemoglobin, blood pressure, pulse rate." Ex. 1011, 1:10–25. Patent Owner does not dispute this. *See* PO Resp. 10–37.

b) "light source"

Claim 7 further requires "a light source comprising a plurality of semiconductor sources that are light emitting diodes, each of the light emitting diodes configured to generate an output optical beam having one or more optical wavelengths, wherein at least a portion of the one or more optical wavelengths is a near-infrared wavelength between 700 nanometers and 2500 nanometers." Ex. 1001, 33:31–37. Petitioner demonstrates how Lisogurski's sensor meets this limitation. *See* Pet. 26–27 (citing Ex. 1011, 4:42–45, 7:38–8:3, 10:42–52, 10:56–64, 17:37–45, 19:25–31 Figs. 1, 3; Ex. 1003, ¶¶ 90–92). Sensor 102/312 can contain multiple LEDs that emit and direct light toward a subject's tissue, including an LED that emits red light, and an LED that emits infrared light having a wavelength between 800 and 1000 nm. Ex. 1011, 4:42–45, 10:48–52, 10:56–64. Patent Owner does not dispute this. *See* PO Resp. 10–37. Petitioner directs us to sufficient evidence to support its contentions. Therefore, we find Petitioner has met its burden of proof on this limitation.

c) "lens"

Claim 7 further requires "a lens configured to receive a portion of at least one of the output optical beams and to deliver a lens output beam to tissue." Ex. 1001, 33:38–40. Petitioner demonstrates how this limitation is taught or suggested by the combination of Lisogurski and Carlson. Pet. 28–31. Petitioner argues that a person of ordinary skill in the art would have known that LEDs are either (i) not covered by an encapsulant, (ii) covered by an optically inert encapsulant, or (iii) covered by a lensing encapsulant. Pet. 28 (citing Ex. 1003 ¶¶ 93–96; Ex. 1035, 97–98, 191–199, 266–267). Petitioner argues a person skilled in the art would have selected the LEDs in

Lisogurski's light source to have lensing encapsulants because "this was a common configuration with known benefits" and that when so configured, "each of Lisogurski's LEDs would emit a portion of an 'output optical beam,' which would be captured and focused by that LED's encapsulant lens, and then emitted as the 'lens output beam.'" *Id.* at 28 (citing Ex. 1003 ¶¶ 95–98).

Petitioner additionally argues Carlson teaches the benefits of using lenses to focus LED light onto a sample. *Id.* at 29–30 (citing Ex. 1009 ¶¶ 13, 14, 24, 62, Fig. 4; Ex. 1003 ¶¶ 101–104). Figure 4 of Carlson is reproduced below.

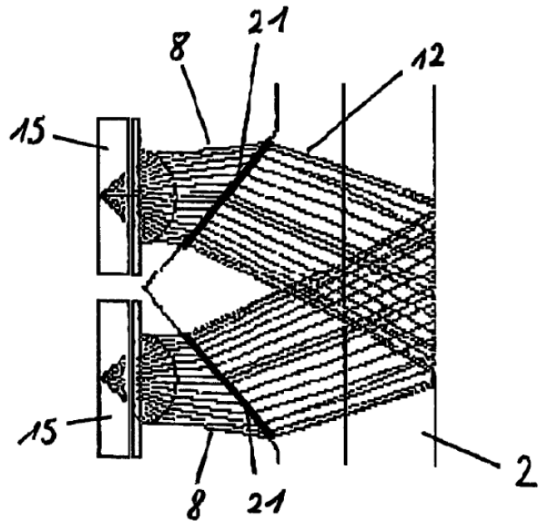

Figure 4

Figure 4 of Carlson is a schematic illustration of "two light emitting sources for an oximetric sensor, including beam shaping optics." Ex. 1009 ¶ 35. Petitioner argues Figure 4 of Carlson shows "two lenses 21 that receive light beams 8 emitted by LEDs 15 . . . and deliver light bundles or beams 12 to sample 2." Pet. 30 (citing Ex. 1009 ¶¶ 54, 62). Petitioner argues a person of ordinary skill in the art would have selected Lisogurski's LEDs to have

lensing encapsulants because Lisogurski teaches reducing power consumption while maintaining signal-to-noise, and Carlson teaches using lenses to "increase the optical signal power . . . without increasing the actual power used by the system." *Id.* at 30–31 (citing Ex. 1009 ¶¶ 10, 14; Ex. 1003 ¶¶ 103–104).

Patent Owner does not dispute Petitioner's arguments with respect to this claim element. *See* PO Resp. 10–37. Petitioner directs us to sufficient evidence to support its contentions. Therefore, we find Petitioner has met its burden of proof on this limitation.

d) "detection system"

Claim 7 further requires "a detection system configured to receive at least a portion of the lens output beam reflected from the tissue and to generate an output signal having a signal-to-noise ratio, wherein the detection system is configured to be synchronized to the light source." Ex. 1001, 33:41–45. Petitioner identifies Lisogurski's detector 140/318 and front end processing circuitry 150 in monitor 104 as the detection system. *See* Pet. 32 ("Lisogurski's detector(s) is connected to front end processing circuitry (together, '*a detection system*')"). Petitioner provides a modified version of Figure 1 of Lisogurski, reproduced below, to illustrate the components of such a detection system.

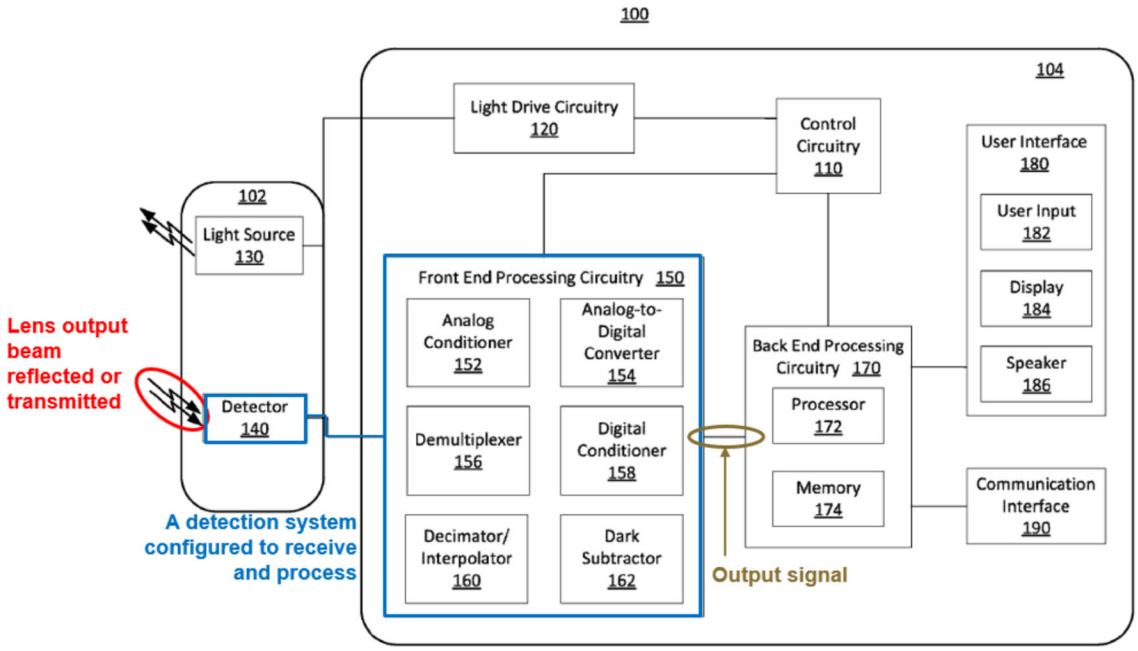

FIG. 1

Id. at 35. Modified Figure 1 of Lisogurski shows Petitioner's proposed modification of sensor 102 to include front end processing circuitry 150 from monitor 104. *Id.*

Petitioner argues Lisogurski's detector 140/318 and front end processing circuitry 150 is a detection system configured to receive at least a portion of the lens output beam reflected from the tissue because detector 140/318 "receives 'the light that is reflected by or has traveled through the subject's tissue.'" *Id.* at 32 (quoting Ex. 1011, 17:40–42; citing Ex. 1011, 11:9–10, Figs. 1, 3). Petitioner argues detector 140/318 and front end processing circuitry 150 generate an output signal because detector 140/318 "convert[s] the intensity of the received light into an electrical signal," and sends it to front end processing circuitry 150, which "receive[s] a detection signal from detector 140 and provide[s] one or more processed signals to back end processing circuitry 170." *Id.* at 32 (quoting Ex. 1011, 11:14–17, 12:42–45; citing Ex. 1011, 11:20–27; Ex. 1003 ¶¶ 106–108).

Petitioner argues Lisogurski discloses that detection signals have a signal-to-noise ratio, and that one of ordinary skill in the art would have recognized that Lisogurski's "processed signals," originating from these detection signals, would similarly have a signal-to-noise ratio, teaching an output signal with a signal-to-noise ratio. *Id.* at 32–33 (citing Ex. 1011, 14:49–50; Ex. 1003 ¶ 108). With respect to the claim's requirement that "the detection system is configured to be synchronized to the light source," Petitioner argues detector 140/318 and front end processing circuitry 150 are synchronized to pulses of the light source because Lisogurski discloses that "front end processing circuitry 150 may… operate ***synchronously*** with light drive circuitry 120. For example, front end processing circuitry 150 may synchronize the operation of an analog-to-digital converter and a demultiplexer with the light drive signal based on the timing control signals." *Id.* at 33–34 (quoting Ex. 1011, 11:41–46; citing Ex. 1003 ¶ 110).

Petitioner argues a person of ordinary skill in the art would have modified Lisogurski's sensor 102/312 to include front end processing circuitry 150. Petitioner argues that, in considering Lisogurski's wireless embodiment of sensor 102/312, a person skilled in the art "would have found it obvious to include the front end processing circuitry, which performs analog-to-digital conversion and other initial processing of the signal, in the sensor where the signal is captured," to allow the sensor to "process the detected signal and wirelessly transmit it to the monitor." *Id.* at 36 (citing Ex. 1003 ¶ 115). Petitioner additionally argues Lisogurski suggests the modification by teaching that "[in] some embodiments the functionality of some of the components may be combined in a single component . . . [or] the functionality of some of the components of monitor

104 . . . may be divided over multiple components." *Id.* (quoting Ex. 1011, 16:2–9; citing Ex. 1003 ¶ 116). Lastly, Petitioner argues the modification would have been obvious in view of industry trends at the time. *Id.* at 37 (citing Ex. 1003 ¶ 117).

Patent Owner does not dispute these contentions. *See* PO Resp. 10–37. Petitioner directs us to sufficient evidence to support its contentions. Therefore, we find Petitioner has met its burden of proof on this limitation.

e) "personal device"

Claim 7 further requires "a personal device comprising a wireless receiver, a wireless transmitter, a display, a microphone, a speaker, one or more buttons or knobs, a microprocessor and a touch screen, the personal device configured to receive and process at least a portion of the output signal, wherein the personal device is configured to store and display the processed output signal, and wherein at least a portion of the processed output signal is configured to be transmitted over a wireless transmission link." Ex. 1001, 33:46–54.

Petitioner demonstrates how this limitation is taught or suggested by back end processing circuitry 170, user interface 180, and communication interface 190 of Lisogurski's monitor 104/314 as the personal device. *See* Pet. 37–39. Petitioner argues back end processing circuitry 170 includes processor 172, user interface 180 includes a display, a microphone, a speaker, buttons, and a touch screen, and communication interface 190 includes receivers for wireless communications. *Id.* at 39 (citing Ex. 1011, 15:19–23, 15:49–56, Fig. 1; Ex. 1003, ¶ 120).

Petitioner argues that Lisogurski teaches the back end processing circuitry determines physiological parameters based on received signals and

includes a memory and display to store and display these physiological parameters. *Id.* at 39–40 (citing Ex. 1011, 14:62–15:16, 15:30–35, 27:31–36, 30:42–48, 33:23–27; Ex. 1003 ¶¶ 121–122). Petitioner further argues that Lisogurski's back end processing circuitry can transmit information through wireless transmission links to publish data to a website or another device, and that such information can also be wirelessly transmitted to a monitor that provides a display for displaying information received from multiple monitoring devices. *Id.* at 40–41 (citing Ex. 1011, 15:43–48, 15:55–57, 18:11–15, 18:49–65, 26:55–60; Ex. 1003 ¶¶ 123–124).

Patent Owner does not dispute this. *See* PO Resp. 10–37. Petitioner directs us to sufficient evidence to support its contentions. Therefore, we find Petitioner has met its burden of proof on this limitation.

f) "remote device"

Claim 7 additionally requires "a remote device configured to receive over the wireless transmission link an output status comprising the at least a portion of the processed output signal, to process the received output status to generate processed data, and to store the processed data." Ex. 1001, 33:55–59.

Petitioner demonstrates how Lisogurski's multi-parameter physiological monitor 326 or remote servers or workstations meet these limitations. *See* Pet. 41–43 (citing Ex. 1011, 15:43–48, 15:55–57, 18:11–15, 18:49–53, 18:58–62, 20:8–13, 26:51–60; Ex. 1003 ¶¶ 125–128). Lisogurski teaches monitor 104/314 can wirelessly "exchange information with [an] external device," such as "a network, a server or other workstation[]," and can "publish [its] data to a server or website." Ex. 1011, 15:43–48, 26:55–60. Multi-parameter physiological monitor 326 is an example of such a

workstation, and can "calculate physiological parameters and . . . provide a display for information from monitor 314 and from other medical monitoring devices." *Id.* at 18:49–53, Fig. 3.

Monitor 104/314 can also "be coupled to a network or enable the sharing of information with servers or other workstations," and Lisogurski teaches that "processing equipment remote to [its] system may be used to determine physiological parameters." *Id.* at 18:62–65, 26:53–55. According to Dr. Anthony, "[a] person of ordinary skill would understand that these devices generate and store processed data in order to perform these functions." Pet. 42 (citing Ex. 1003 ¶¶ 127–128). Lisogurski further teaches that its systems can store historical data and perform statistical analyses on that data. Ex. 1011, 20:8–13. According to Dr. Anthony, "[a] person of ordinary skill would . . . understand that the remote device stores a history of the data and can perform the described historical analysis." Pet. 43 (citing Ex. 1003 ¶¶ 129, 133–134).

Patent Owner does not dispute this. *See* PO Resp. 10–37. Petitioner directs us to sufficient evidence to support its contentions. Therefore, we find Petitioner has met its burden of proof on this limitation.

g) "the output signal"

Claim 7 additionally requires that "the output signal is indicative of one or more of the physiological parameters, and the remote device is configured to store a history of at least a portion of the one or more physiological parameters over a specified period of time." Ex. 1001, 33:60–64.

As discussed with reference to the "personal device" claim limitation, Petitioner argues that Lisogurski's physiological signals teach the output

signal, and that these signals are used to calculate physiological parameters. Pet. 39–40 (Ex. 1011, 14:62–64, 15:30–35; Ex. 1003 ¶ 121). Petitioner demonstrates that the output Lisogurski transmits to other monitors may be used to calculate physiological parameters and, in one example, to perform historical analysis of prior cardiac cycles, and therefore that one of ordinary skill would have understood that historical physiological data over time would be stored. Pet. 42–43 (citing Ex. 1011, 18:49–53, 19:1–9, 20:8–13, 26:55–60; Ex. 1003 ¶¶ 129–132).

Patent Owner does not dispute this. *See* PO Resp. 10–37. Petitioner directs us to sufficient evidence to support its contentions. Therefore, we find Petitioner has met its burden of proof on this limitation.

h) increasing the signal-to-noise ratio by increasing light intensity

Claim 7 contains the following limitation: "the system configured to increase the signal-to-noise ratio by increasing light intensity of at least one of the plurality of semiconductor sources from an initial light intensity." Ex. 1001, 33:65–34:1.

Petitioner demonstrates how Lisogurski teaches that the parameters of the LEDs in the wearable sensor may be adjusted, including by "increas[ing] the brightness of the light sources in response to . . . noise to improve the signal-to-noise ratio." Pet. 43–44, 47 (quoting Ex. 1011, 9:46–52; citing *id.* at 5:55–6:6, 9:46–52, 9:57–60, 10:48–49, 14:49–55, 35:5–9, 37:6–22; Ex. 1003 ¶¶ 135–138, 144–149). Petitioner argues that Lisogurski's control and light drive circuitry activate and control the sensor's light sources. *Id.* at 44 (citing Ex. 1011, 1:19–21, 1:44–46, 11:38–41, 11:50–54; Ex. 1003 ¶ 137).

Patent Owner does not dispute that Lisogurski's system is configured to increase SNR by increasing light intensity. *See* PO Resp. 15 (quoting Ex. 1011, 9:50–52) ("Lisogurski's 'system may increase the brightness of the light sources in response to [any] noise to improve the signal-to-noise ratio.'"). Petitioner directs us to sufficient evidence to support its contentions. Therefore, we find Petitioner has met its burden of proof on this limitation.

i) *The Pulse Rate Limitation*

Claim 7 also requires that the system be "configured to increase the signal-to-noise ratio . . . by increasing a pulse rate of at least one of the plurality of semiconductor sources from an initial pulse rate." Ex. 1001, 33:65–34:3.

Petitioner contends Lisogurski alone teaches this limitation, and further contends the combination of Lisogurski and Carlson teaches this limitation. *See* Pet. 48–52. Patent Owner disputes this. *See* PO Resp. 10–37. We address Petitioner's contentions below and, notwithstanding Patent Owner's arguments to the contrary, find Petitioner demonstrates how Lisogurski alone, or in combination with Carlson, teaches or suggests the pulse rate limitation.

(1) Lisogurski alone

Petitioner argues that Lisogurski alone teaches the pulse rate limitation by teaching adjusting the firing rate, which Petitioner argues is the same as the "pulse rate" in the claims. Pet. 48 & n.8 (citing Ex. 1011, 2:1–2, 8:29–35, 9:46–52, 25:49–55, 27:44–52, 37:6–22; Ex. 1003 ¶¶ 152–154). Petitioner contends that the firing rate is correlated to the detector sampling rate, and that the sampling rate may be varied for the same reason that

brightness may be adjusted, in other words, including to improve the signal-to-noise ratio. *Id.* at 48–49 (citing Ex. 1011, 9:46–52, 11:43–46, 11:52–55, 25:49–55, 33:47–49, 33:56–58, 35:7–9, 35:27–31; Ex. 1003 ¶¶ 155–156). That is, Petitioner argues that Lisogurski teaches the pulse rate limitation because the LED firing rate and detector sampling rate are correlated and "increasing the sampling rate 'may result in more accurate and reliable physiological information.'" *Id.* at 48–49 (quoting Ex. 1011, 33:56–58; citing Ex. 1003 ¶ 156).

In our Institution Decision, we made a preliminary finding that Petitioner had not sufficiently demonstrated how Lisogurski teaches the pulse rate limitation because Lisogurski varies the LED brightness, LED pulse rate, and detector sampling rate to be synchronous with a cardiac cycle rather than to improve signal-to-noise. Dec. Inst. 47–48. For example, Lisogurski teaches:

> [T]he system may generate a light drive signal that varies with a period the same as or closely related to the period of the cardiac cycle, thus generating a cardiac cycle modulation. The system may vary parameters related to the light drive signal including drive current or light brightness, duty cycle, firing rate, modulation parameters, other suitable parameters, or any combination thereof.

Ex. 1011, 25:49–55. Lisogurski further teaches:

> It will also be understood that sampling rate is one of the components that may be *modulated in cardiac cycle modulation* as described above. It will also be understood that the earlier described embodiments relating to varying light output may also apply to sampling rate.

Id. at 35:5–9 (emphasis added).

Patent Owner agrees with this preliminary finding. *See* PO Resp. 2 ("In its Institution Decision . . . the Board correctly explained that Lisogurski's system varies an LED's pulse rate but not to increase SNR."), 17. However, Patent Owner also made the following statement in the Preliminary Response:

> *Lisogurski teaches three different techniques for increasing SNR*: (i) by increasing the "brightness" of the light source, (ii) by operating in a "high power mode without cardiac cycle modulation," and (iii) by *modulating the light signal to correlate with "physiological pulses" such as a "cardiac pulse," e.g.*, "diastole period cardiac modulation" or "systole period cardiac cycle modulation."

Prelim. Resp. 16 (citing Ex. 1011, 6:3–6, 9:4–7, 25:66–26:14; 42:45–58).

In its Response, Patent Owner contends that while Lisogurski does teach adjusting the pulse rate to track a user's cardiac cycle, increasing a pulse rate to track cardiac cycle is not done to increase the SNR. PO Resp. 11–13 (citing Ex. 1011, code (57), 1:41–47, 10:9–12, 21:51–53, 22:45–47, 23:24–27, 24:10–13). Patent Owner argues that tracking of a user's cardiac cycle will result in both increases and decreases to the firing rate. *Id.* at 13 (citing Ex. 2131 ¶¶ 79–80). Patent Owner further contends that any change in firing rate to track a cardiac cycle would leave the firing rate within a noisy low frequency range (.5 Hz to 3Hz) and thus would be "within the envelope of noise and would not increase SNR." *Id.* at 13–15 (citing Ex. 1009 ¶¶ 9, 66; Ex. 1011, 6:7–30, 9:50–52, 41:48, 43:15–16, 44:42–43; Ex. 2131 ¶¶ 81–82). Additionally, Patent Owner contends, changes in firing rate during the tracking of the cardiac cycle (increases as well as decreases) are performed to maintain SNR rather than to improve it. PO Sur-reply 7 (citing Ex. 2131 ¶ 80).

Petitioner replies that "when a person's heart rate increases" Lisogurski "increase[s] the sampling rate and emitter firing rate to become or remain synchronous with [the] cardiac cycle." Pet. Reply 10 (citing Ex. 1011, 25:49–55; 31:11–24; 31:39–55). Petitioner argues this allows Lisogurski to obtain "more accurate and reliable physiological information," which a person of ordinary skill in the art would have understood occurs "because [the] SNR is higher." *Id.* at 11 (quoting Ex. 1001, 33:46–52; citing Ex. 1003 ¶ 116). Petitioner further highlights that in this case (heart rate increase) Patent Owner "admitted that Lisogurski's cardiac cycle modulation increases SNR by modulating the pulse frequency to correlate with the cardiac cycle" and that this meets the claim limitation when cardiac cycle modulation increases the pulse frequency even if, as Patent Owner argues, the cardiac cycle modulation at other times increases SNR by *decreasing* the pulse rate (to track a user's decreased heart rate). *Id.* at 10–11 (quoting Prelim. Resp. 16). Petitioner argues that "[t] he claims cover a device that increases SNR by increasing the pulse rate of an LED, even if the device does not intend to increase SNR by doing so" because "apparatus claims cover what a device is, not what a device does." *Id.* at 9–10 (quoting *ParkerVision, Inc. v. Qualcomm Inc.*, 903 F.3d 1354, 1361 (Fed. Cir. 2018)).

We are persuaded by Petitioner's arguments, which are supported not only by intrinsic evidence and argument advanced by Patent Owner, but also by testimony provided by Patent Owner's expert witness. Lisogurski teaches correlating LED pulse rate and cardiac cycle rate, for example, by increasing LED pulse rate to match an increased cardiac cycle rate. Ex. 1011, 25:49-55 (cited at Pet. 48). Patent Owner acknowledges that Lisogurski teaches signal-to-noise can be improved by correlating the LED

drive signal with a cardiac cycle signal. *See* Prelim. Resp. 16 (citing Ex. 1011, 25:66–26:14, 42:45–58); *Cook Group Inc. v. Boston Sci. Scimed, Inc.*, 809 F. App'x. 990, 1000 (Fed. Cir. 2020) ("[A]n admission in a preliminary patent owner response, just like an admission in any other context, is evidence appropriately considered by a factfinder.").

Dr. MacFarlane, Patent Owner's witness, was deposed regarding increases in pulse rate, and testified that, "[g]enerally speaking, the faster the modulation, the faster the pulse rate, the lower the background noise," and that while "there are counterexamples . . . generally speaking, as -- as you have a faster or an increased pulse rate, you see a lower noise environment." Ex. 1065, 37:8–39:17. Dr. MacFarlane also declared "Lisogurski teaches that ***SNR may improve*** by locking on to an aspect of the cardiac cycle" including by "varying the firing rate" in relation to that cardiac cycle trigger, which may include increases as well as decreases in the firing rate. Ex. 2131 ¶¶ 79–80 (emphasis added). We determine that this testimony is more consistent with Petitioner's position that "Lisogurski sometimes increases SNR by increasing LED firing rate" (Pet. Reply 10) than with Patent Owner's counterview that "Lisogurski teaches the firing rate increase only to ***maintain*** SNR by matching the changes in the PPG cardiac cycle," which may suggest that a failure to increase would result in a decrease in SNR (PO Sur-reply 7). Lisogurski's system, therefore, is "configured" to increase signal-to-noise by increasing LED pulse rate, even if it only does so some of the time. *See Hewlett-Packard Co. v. Mustek Systems, Inc.*, 340 F.3d 1314, 1326 (Fed. Cir. 2003) ("[A] prior art product that sometimes, but not always, embodies a claimed method nonetheless teaches that aspect of the invention.").

Accordingly, for the reasons discussed above, Petitioner has demonstrated how Lisogurski alone teaches the pulse rate limitation.

(2) Lisogurski and Carlson

Petitioner additionally argues that the combination of Lisogurski and Carlson teaches the pulse rate limitation. Pet. 50–52. Specifically, Petitioner argues that Lisogurski "clearly identifies the importance of increasing signal-to-noise ratio" by increasing LED intensity to increase signal-to-noise. *Id.* at 50 (citing Ex. 1011, 9:50–52). Therefore, Petitioner argues, a person skilled in the art "would have been motivated to consider additional ways of improving the signal-to-noise ratio when considering implementing Lisogurski." *Id.* (citing Ex. 1003 ¶¶ 80, 158–160). Petitioner argues Carlson teaches such a method, and improves a pulse oximeter's signal-to-noise by pulsing the oximeter's LEDs at a frequency that is "outside the frequency spectrum of sunlight and of ambient light" in order to "reduce[] the effects of ambient light including sunlight." *Id.* at 50–51 (citing Ex. 1009 ¶¶ 67–69; Ex. 1003 ¶¶ 157–159).

Petitioner argues that it would have been obvious to modify Lisogurski based on the teachings of Carlson because both references recognize the problem of ambient light noise "and the need to offset its negative impact on the signal-to-noise ratio." *Id.* at 51 (citing Ex. 1009 ¶¶ 67–69; Ex. 1011, 9:46–60; Ex. 1003 ¶¶ 158–161). Petitioner further argues that it would have been straightforward to modify Lisogurski to incorporate the teachings of Carlson because Lisogurski already teaches (a) modifying the LED firing rate in response to changing conditions, and (b) modifying the light drive signal in response to changes in ambient light and

other sources of noise. *Id.* at 51–52 (citing Ex. 1011, 1:67–2:3, 5:55–61, 9:46–60, 37:6–18; Ex. 1003 ¶¶ 160–162).

Patent Owner argues that Carlson does not disclose pulse rate increase from an initial pulse rate (as required by the pulse rate limitation: "*increasing a pulse rate* of at least one of the plurality of semiconductor sources *from an initial pulse rate*"), but rather that Carlson discloses a system that modulates the LED only at one specific fixed pulse rate. PO Resp. 19–23 (citing Ex. 2131 ¶¶ 27, 28, 83, 84, 92, 94, 95). Patent Owner argues that Carlson teaches that a designer may choose one of several different frequencies but that it remains fixed once it is selected, and that Carlson discloses use of either "current or continuous light" or light modulated using the fixed frequency. *Id.* at 27–31 (citing Ex. 1009 ¶¶ 65, 67, 69, Fig. 7c; Ex. 2131 ¶¶ 89–99). Thus, Patent Owner argues, the combination of Lisogurski and Carlson does not teach or suggest the claimed system configured to increase the signal-to-noise ratio by increasing a pulse rate of at least one of the plurality of semiconductor sources from an initial pulse rate. *Id.* at 33.

In our Institution Decision, we made a preliminary finding that Petitioner was reasonably likely to show how the combination of Lisogurski and Carlson teaches the pulse rate limitation because:

> Together, the references teach that a pulsoximeter can detect a change in background noise and modify the LED firing rate based on the detected change (as taught by Lisogurski), and can modify the frequency of the LED firing rate to be greater than the frequency of the background noise (as taught by Carlson).

Dec. Inst. 52 (citing Ex. 1011, 1:67–2:3, 37:6–9; Ex. 1009 ¶¶ 65, 69). Patent Owner argues this is "an argument Petitioner did not make." PO Resp. 19.

Petitioner disagrees, citing the discussion of Carlson in the Petition and the portions of Carlson discussed in the Preliminary Response. Pet. Reply 18 (citing Pet. 50–51; Prelim. Resp. 18–21).

We agree with Petitioner. The *Petition* states: Lisogurski "adjust[s] various parameters of light emitted by the LEDs to ensure an adequate signal-to-noise ratio," including "drive current or light brightness, duty cycle, [and] ***firing rate***." Pet. 48 (citing Ex. 1011, 25:49–55, 27:44–52, 37:6–22) (internal citations omitted). We agree. For example, Lisogurski measures a physiological parameter in cardiac cycle modulation mode using "a light drive signal that varies with a period the same as . . . the period of the cardiac cycle," i.e., a 1 second period corresponding to a firing rate of 1 Hz. Ex. 1011, 5:48–54, 25:46–52. Lisogurski "detect[s] a change in background noise [or] . . . ambient light" and "perform[s] a physiological measurement in a second mode." *Id.* at 37:6–9, 37:14–15. The second mode, for example, can (a) "stop cardiac cycle modulation," (b) "increase emitter intensity" during cardiac cycle modulation, (c) "lengthen the 'on' periods" (i.e., duty cycle) of cardiac cycle modulation, or (d) "alter the cardiac cycle modulation" by changing the LED firing rate as shown in Figure 8B. *Id.* at 37:15–22. That is, the second mode can differ from cardiac cycle modulation by changing any of the light drive signal parameters, i.e., the "drive current or light brightness, duty cycle, firing rate . . . or any combination thereof." *Id.* at 27:44–49. Thus, *in the Petition*, Petitioner cites sufficient evidence to persuasively demonstrate how Lisogurski teaches (1) modulating an LED by pulsing it at a 1 Hz rate that matches a cardiac cycle, (2) detecting ambient light noise, and (3) changing

the LED modulation to operate in a second mode by changing one or more of the LED brightness, duty cycle (on time per cycle), or firing rate.

The *Petition* also states: Carlson teaches "pulsing the LEDs reduces the effects of ambient light including sunlight" when "the pulse frequency ('*pulse rate'*) is 'chosen in such a way that it is outside the frequency spectrum of sunlight and of ambient light.'" Pet. 50 (quoting Ex. 1009 ¶¶ 67–69). We agree. For example, Carlson teaches various means to improve a pulsoximeter's signal-to-noise ratio. Ex. 1009 ¶¶ 62–69. These include "us[ing] a light source modulation to temporarily modulate the optical radiation of the LED" at a frequency that "is chosen in such a way that it is outside the frequency spectrum of sunlight and of ambient light . . . in the range of above approximately 1000 Hz." *Id.* ¶¶ 64, 69.

Finally, the *Petition* also states: Lisogurski "can readily be modified to incorporate the Carlson technique, given that Lisogurski teaches that the firing rate of the LEDs can be adjusted in response to changes in environmental conditions, such as changes in background noise or ambient light." Pet. 38. We agree. As discussed above, Lisogurski teaches (1) taking a physiological measurement in cardiac cycle modulation mode using LEDs modulated at a 1 Hz pulse rate, (2) exiting the cardiac cycle modulation mode upon detecting ambient light noise, and (3) taking the measurement in a second mode that varies any combination of LED brightness, duty cycle, or firing rate, and Carlson teaches (4) taking a physiological measurement using an LED modulated at a 1000 Hz pulse rate to reduce ambient light noise. *See* Pet. 48, 50–51 (citing Ex. 1011, 25:49–55, 27:44–52, 37:6–22; Ex. 1009 ¶ 69). Thus, Petitioner cites sufficient

evidence *in the Petition* to demonstrate how the combination of Lisogurski and Carlson teaches the pulse rate limitation.

Patent Owner argues that Carlson fails to teach the pulse rate limitation because Carlson discloses temporarily modulating a continuous light source to operate "at a chosen single, fixed pulse rate" that is not increased. PO Resp. 19–23. The concurrence disagrees. We need not resolve that issue here, however, because we find Lisogurski teaches switching the LED pulse rate from a cardiac cycle mode (1 Hz pulse rate) to a second mode that reduces ambient light noise, and Carlson teaches pulsing the LED at 1000 Hz to reduce ambient light noise; that is, the combination teaches increasing signal-to-noise by increasing the LED pulse rate from 1 Hz to 1000 Hz.

Patent Owner argues that "neither reference teaches nor suggests ***increasing*** the pulse rate for any reason, let alone for the purpose of increasing SNR as the claims require." PO Resp. 23–25. We are not persuaded by this argument because it focuses on the disclosures of the asserted references individually, without taking fair account of what the combined teachings of Carlson and Lisogurski would have suggested to a person of ordinary skill. "Non-obviousness cannot be established by attacking references individually where the rejection is based upon the teachings of a combination of references." *In re Merck & Co.*, *Inc*., 800 F.2d 1091, 1097 (Fed. Cir. 1986). Rather, the test for obviousness is "what the combined teachings of the references would have suggested to those of ordinary skill in the art." *In re Keller*, 642 F.2d 413, 425 (Fed. Cir. 1981). As discussed above, the combined teachings of Lisogurski and Carlson are to (1) pulse an LED in a cardiac cycle modulation mode, (2) detect ambient

light noise, and (3) switch to a second mode to reduce the ambient light noise, such as a mode that pulses the LED at 1000 Hz. Based on the evidence presented by Petitioner, we are persuaded that the proposed combination of Lisogurski and Carlson represents a simple "substitution of one element for another known in the field" to achieve a predictable result. *KSR* 550 U.S. at 416.

Accordingly, for the reasons discussed above, we find Petitioner has demonstrated that the combination of Lisogurski and Carlson teaches a system configured to increase signal-to-noise by increasing LED pulse rate.

j) "differencing"

Claim 7 requires the detection system be "further configured to: generate a first signal responsive to light received while the light emitting diodes are off, generate a second signal responsive to light received while at least one of the light emitting diodes is on, and increase the signal-to-noise ratio by differencing the first signal and the second signal." Ex. 1001, 34:4–11.

Petitioner demonstrates that Lisogurski teaches this limitation in its discussion of "dark subtraction" in which ambient light and background signals are removed from a signal by using measurements from periods in which Lisogurski's light sources are off and subtracting this "ambient contribution" from the signals received at the detector when the light sources are on. Pet. 52–57 (citing, *inter alia*, Ex. 1011, 6:12–15, 11:12–20, 13:60–14:10, 17:40–42, Ex. 1003 ¶¶ 163–168, 170–173). Petitioner shows that the "dark subtractor" of Lisogurski teaches the "differencing" of the first signal (converted from light captured while the light source LEDs are off) and the second signal (converted from light captured while at least one light source

LED is on). *Id.* at 56–57 (citing, *inter alia*, Ex. 1011, 13:60–14:10, 16:51–54; Ex. 1003 ¶¶ 171–172). Petitioner argues that one of ordinary skill in the art would have understood this to improve signal-to-noise ratio in the signal. *Id.* at 57 (citing Ex. 1003 ¶ 146).

Patent Owner does not dispute this. *See* PO Resp. 10–37. Petitioner directs us to sufficient evidence to support its contentions. Therefore, we find Petitioner has met its burden of proof on this limitation.

k) Conclusion

For the reasons discussed above, we find Petitioner has demonstrated by a preponderance of evidence that the combination of Lisogurski and Carlson teaches all the limitations of claim 7 and that claim 7 is unpatentable over the combination.

3. Claim 11

Claim 11 depends from claim 7, adding that the detection system comprises a plurality of spatially separated detectors. Ex. 1001, 34:24–25. Petitioner demonstrates that the additional limitation of claim 11 is taught by Lisogurski. Pet. 57 (citing Ex. 1011 17:40–42; Ex. 1003 ¶ 175). Patent Owner does not dispute this. *See* PO Resp. 10–37.

For the reasons discussed above, we find Petitioner has demonstrated by a preponderance of evidence that the combination of Lisogurski and Carlson teaches all the limitations of claim 11 and that claim 11 is unpatentable over the combination.

4. Claim 12 – Lisogurski and Carlson

Claim 12 depends from claim 11, adding that "at least one of the spatially separated detectors is located at a distance from a first one of the light emitting diodes and at a different distance from a second one of the

light emitting diodes, and is configured to generate a third signal responsive to light from the first light emitting diode and a fourth signal responsive to light from the second light emitting diode." Ex. 1001, 34:26–33.

Petitioner demonstrates that Lisogurski teaches this additional limitation. Petitioner argues that Lisogurski discloses that "'[a]ny suitable configuration' of sources and detectors may[ ]be used." Pet. 58 (quoting Ex. 1011, 17:39–45). Petitioner additionally argues that the claimed configuration would have been a design choice, and supplies a motivation to select the claimed configuration, i.e., for "characterizing the path length dependent absorption properties of tissue" or "reducing motion artifacts or . . . characterizing tissue motion." Ex. 1003 ¶ 179 (cited at Pet. 59 n.9); *see Cutsforth, Inc. v. Motivepower, Inc.*, 636 F. App'x 575, 578 (Fed. Cir. 2016) (nonprecedential) ("Merely stating that a particular placement of an element is a design choice does not make it obvious [without] a reason for why a person of ordinary skill in the art would have made the specific design choice."). Petitioner further argues that Lisogurski teaches a detector that detects a first signal from a first LED and a second signal from a second LED by teaching receiving signals from a red LED during a red "on" period 202 and from an IR LED during an IR "on" period 204. Pet. 62 (citing Ex. 1011, 7:38–8:3, 12:29–33, Figs. 2A, 2B; Ex. 1003 ¶ 180).

We agree with Petitioner that Lisogurski and Carlson teach the limitations of claim 12. Lisogurski discloses "[s]ensor unit 312 may include one or more light source[s] 316" and "[o]ne or more detector[s] 318." Ex. 1011, 17:37–42. Light sources 316 can include "a high efficiency infrared (IR) LED" and one or more "lower efficiency red LEDs." *Id.* at 7:58–61. The red and IR LEDs can be flashed on and off, including during

separate "Red light LED 'on' periods 202" and "IR light 'on' period[s] 204," during which the signals from the red and IR LEDs can be captured by a single detector 318. *Id.* at 12:23–33, Figs. 2A, 2B. "Any suitable configuration of sources and detectors may be used." *Id.* at 17:39–45.

Patent Owner does not dispute this. *See* PO Resp. 10–37. Petitioner directs us to sufficient evidence to support its contentions. Therefore, we find Petitioner has met its burden of proof on this limitation.

For the reasons discussed above, we find Petitioner has demonstrated by a preponderance of evidence that the combination of Lisogurski and Carlson teaches all the limitations of claim 12 and that claim 12 is unpatentable over the combination of Lisogurski and Carlson.

5. Claim 13 – Lisogurski and Carlson

Claim 13 depends from claim 12, adding that "the output signal is generated in part by comparing the third and fourth signals." Ex. 1001, 34:33–34.

Petitioner demonstrates that this limitation is taught by Lisogurski's comparison of signals representing two wavelengths of light "to estimate the blood oxygen saturation of hemoglobin in arterial blood." Pet. 59–60 (citing Ex. 1011, 4:45–56, 45:6–22; Ex. 1003 ¶ 182). Petitioner argues persuasively that Lisogurski teaches this limitation by detecting light from red and IR LEDs pulsed at different points in a timing cycle as discussed above, and teaching that by "*comparing the intensities of two wavelengths* at different points in the pulse cycle, it is possible to estimate the blood oxygen saturation of hemoglobin in arterial blood." *Id.* (quoting Ex. 1011, 4:45–51) (emphasis in original). Petitioner further demonstrates that Lisogurski computes the blood oxygen saturation from the intensities of light detected

from the red and IR LEDs "using the ratio-of-ratios calculation, which is the ratio of the measured IR signal to the measured red signal." *Id.* at 60 (citing Ex. 1011, 4:45–56; Ex. 1019, 769–770; Ex. 1003 ¶ 182).

Patent Owner does not dispute this. *See* PO Resp. 10–37. Petitioner directs us to sufficient evidence to support its contentions. Therefore, we find Petitioner has met its burden of proof on this limitation.

For the reasons discussed above, we find Petitioner has demonstrated by a preponderance of evidence that the combination of Lisogurski and Carlson teaches all the limitations of claim 13 and that claim 13 is unpatentable over the combination of Lisogurski and Carlson.

E. Patentability of Claims 12 and 13 over Lisogurski, Carlson, and Mannheimer

Petitioner alternatively argues that claims 12 and 13 are unpatentable over the combination of Lisogurski, Carlson, and Mannheimer. *Id.* at 60–66. Patent Owner does not dispute this. *See* PO Resp. 10–37. For reasons that follow, we find Petitioner's arguments in connection with this ground are well-supported by record evidence.

1. Overview of Mannheimer

Mannheimer discloses a pulse oximetry device that "non-invasively measure[s] blood oxygen saturation of arterial blood in vivo." Ex. 1008, 1:10–13. Mannheimer's device performs a "pulsed oximetry measurement [that] isolates arterial saturation levels for particular ranges of tissue layers . . . by utilizing multiple spaced detectors and/or emitters." *Id.* at 2:1–6. Figure 1A of Mannheimer is reproduced below.

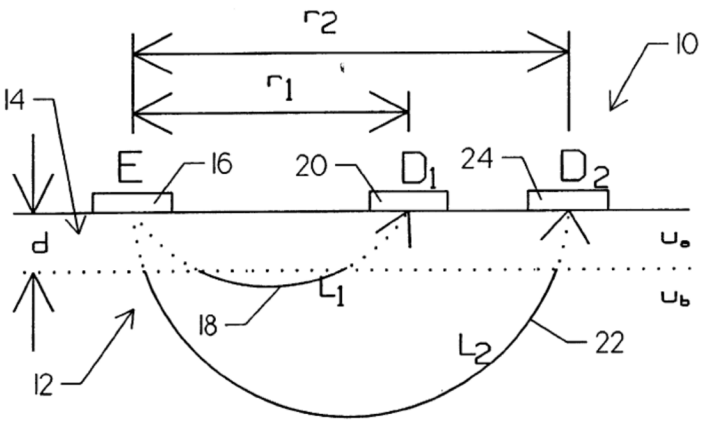

FIG. 1 A

Figure 1A of Mannheimer is a schematic diagram of a first embodiment of a pulse oximeter having one emitter 16 and two detectors 20/24. *Id.* at 2:40–42. Emitter 16 can be a single LED or multiple LEDs collocated to simulate a single point source. *Id.* at 3:13–18. Emitter 16 is separated from detector 20 by a first distance r_1, and is separated from detector 24 by a second distance r_2. *Id.* at 3:23–24. Light from emitter 16 is scattered by skin layer 14 and deeper skin layer 12, and reaches detectors 20/24 via respective paths 18/22. *Id.* at 3:18–20. Mannheimer calculates the blood oxygen concentration in skin layer 12 from the intensity of detected light at detectors 20/24 at two different times and two different wavelengths. *Id.* at 3:35–4:63.

In addition to the embodiment shown in Figure 1A, Mannheimer discloses a second embodiment of a pulse oximeter in Figure 1B, reproduced below.

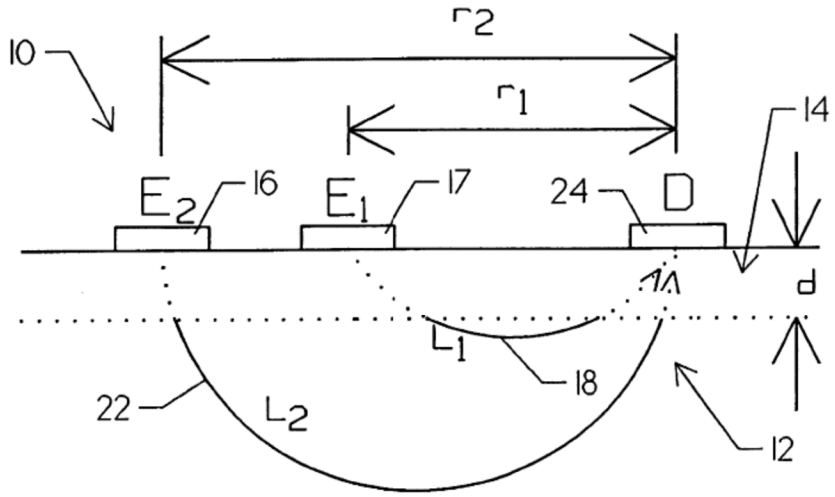

FIG. 1 B

Figure 1B of Mannheimer is a schematic diagram of a second embodiment of a pulse oximeter having two emitters 16/17 and one detector 24. *Id.* at 2:43–44, 3:37–39. As shown in Figure 1B, emitter 17 is separated from detector 24 by a first distance r_1, and emitter 16 is separated from detector 24 by a second distance r_2. Mannheimer discloses that "[t]hose of skill in the art will appreciate that the operation" of the second embodiment shown in Figure 1B "is similar to that described above" in reference to the first embodiment shown in Figure 1A. *Id.* at 5:58–62.

2. Combination of Lisogurski, Carlson, and Mannheimer

Petitioner persuasively argues that one of ordinary skill considering Lisogurski and Carlson would have looked to other references for improving the operation of optical sensing systems, would have looked to Mannheimer's arrangement of emitters and a detector, and would have been motivated by the benefits identified in Mannheimer to make the

combination. *Id.* at 61–62, 64–66 (citing Ex. 1011, 17:45; Ex. 1008, 3:25–35, 5:1–5; Ex. 1003 ¶¶ 189–193, 198, 199, 203).

Patent Owner does not dispute this. *See* PO Resp. 10–37. Petitioner's propositions are well-supported by the record, therefore, we accept them.

We agree that a person of ordinary skill in the art would have modified Lisogurski's sensor as described in Mannheimer. Lisogurski expressly suggests that "[a]ny suitable configuration of sources and detectors may be used." Ex. 1011, 17:39–45. Mannheimer describes a configuration of sources and detectors and explains that they provide different path lengths that allow the effects of portions of the tissue of interest on light to be more accurately ascertained. Ex. 1008, 2:1–6, 3:25–35, Fig 1B.

3. Claim 12 – Lisogurski, Carlson, and Mannheimer

Petitioner argues that the additional limitation of claim 12 would have been obvious in view of a combination of Lisogurski and Mannheimer. Pet. 63–66. Petitioner demonstrates that Mannheimer's arrangement of two emitters spaced at different distances from a detector, and Mannheimer's discussion of performing calculations based on measurements corresponding to signals reflected by different depths of tissue teaches the additional limitation of claim 12. *Id.* at 63–65 (citing Ex. 1008, 2:16–18, 3:18–24, 3:35–54, 4:15–20, 5:58–62, Fig 1B; Ex. 1003 ¶¶ 197, 201, 202).

Patent Owner does not dispute this. *See* PO Resp. 10–37. Petitioner's arguments on this limitation are well-supported by the record. Therefore, we accept them.

For the reasons detailed above, we find Petitioner has demonstrated by a preponderance of evidence that the combination of Lisogurski, Carlson,

and Mannheimer teaches all the limitations of claim 12 and that claim 12 is unpatentable over the combination of Lisogurski, Carlson, and Mannheimer.

4. Claim 13 – Lisogurski, Carlson, and Mannheimer

Petitioner contends that the additional limitation of claim 13 is taught by Mannheimer. Pet. 66. Petitioner demonstrates that Mannheimer uses the two signals reflected by different depths of tissue to subtract noise caused by the surface layer, teaching the use of each signal in generating the output signal. *Id.* (referencing showing relating to claim 12, additionally citing Ex. 1003 ¶ 204).

Patent Owner does not dispute this. *See* PO Resp. 10–37. Petitioner directs us to sufficient evidence to support its contentions. Therefore, we find Petitioner has met its burden of proof on this limitation.

For the reasons detailed above, we find Petitioner has demonstrated by a preponderance of evidence that the combination of Lisogurski, Carlson, and Mannheimer teaches all the limitations of claim 13 and that claim 13 is unpatentable over the combination of Lisogurski, Carlson, and Mannheimer.

F. Patentability of Claims 10 and 14 over Lisogurski, Carlson and Park and Patentability of Claim 14 over Lisogurski, Carlson, Mannheimer, and Park

Petitioner argues claims 10 and 14 are unpatentable over the combination of Lisogurski, Carlson, and Park. Pet. 67–71. Additionally, Petitioner argues that claim 14 is unpatentable over the combination of Lisogurski, Carlson, Mannheimer, and Park.[4] *Id.*; *see id.* at 63–66.

[4] *See supra* Section I.G, n.2.

1. Overview of Park

Park describes a portable biometric monitoring device, worn by a user, which collects physiological or environmental data. Ex. 1010, code (57), 1:34–43. The device includes sensors that can detect physiological metrics such as the user's heart rate. *Id.* at 1:40–43.

Figure 3 of Park, reproduced below, is a portable biometric monitoring device that may be secured to the user through the use of a band. *Id.* at 2:26–28, 2:37–39.

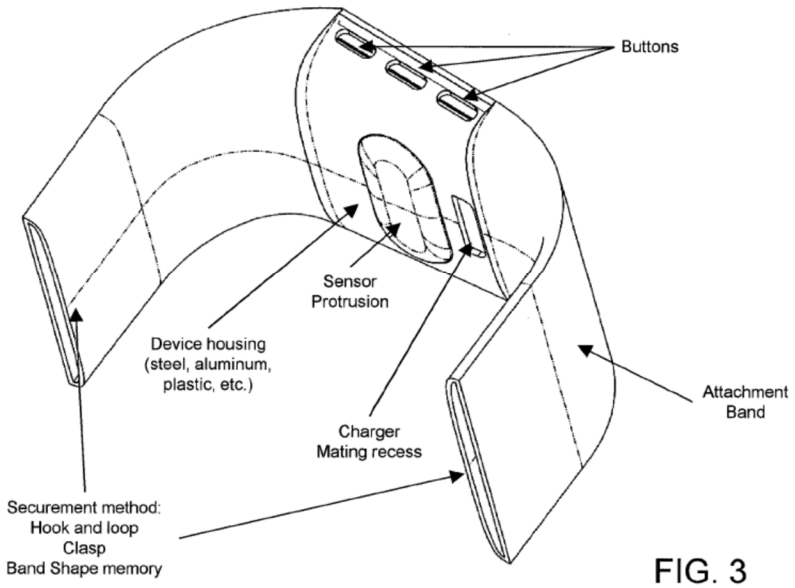

Figure 3 shows a device including an attachment band with securement method, and a sensor protrusion that "more firmly maintain[s] the sensor in contact with the skin of the user." *Id.* at 2:39–44. Sensors may include a light source including one or more light sources (e.g., LEDs) to emit light into the user's body, and light detectors to "sample, measure and/or detect" a physiological condition and provide data regarding that condition. *Id.* at 6:42–55; 11:17–31.

Figure 10 of Park, reproduced below in black and white with annotations in color, illustrates an exemplary photoplethysmography (PPG) detector. *Id.* at 3:28–45.

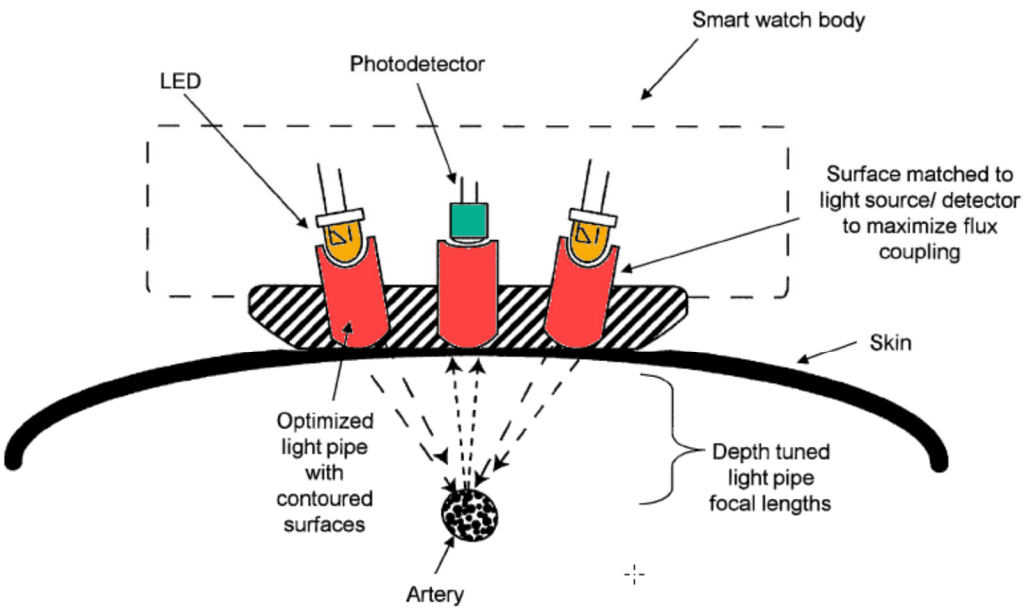

FIG. 10

As shown in Figure 10, light pipes (shown in red) connect the LEDs (shown in orange) and the photodetector (shown in green) to the user's skin. *Id.* at 3:33–45. Light is directed by the light pipes from the light source to the skin of the user, and then reflected light (e.g. from the artery shown in Figure 10) is detected by the photodetector. *Id.* at 11:32–39. Additionally, material on the side of the device facing the skin may have "a high reflectivity characteristic" in order to reflect light off the skin side of the device back into the skin and improve the signal-to-noise ratio of the physiological data. *Id.* at 15:49–16:7.

2. Combination of Lisogurski, Carlson, and Park

Petitioner demonstrates that one of ordinary skill considering Lisogurski and Carlson would have looked to other references for addressing

power consumption issues in pulsoximetry devices, such as to Park's techniques to increase the quality of the signal and improve measurement accuracy, including Park's reflective material. *Id.* at 68–70 (citing Ex. 1011, 1:4–6; Ex. 1010, 15:49–54; Ex. 1003 ¶¶ 209–212). Patent Owner does not dispute this. *See* PO Resp. 10–37.

We agree that a person of ordinary skill in the art would have combined Park with Lisogurski and Carlson, to modify Lisogurski's sensor as described in Park. Lisogurski describes its disclosure as directed to power optimization. Ex. 1011, code (54), code (57), 1:4–6. Park describes using a reflective material on the skin-facing side of a device to effectively increase the input light signal. Ex. 1010, 15:49–57. One of ordinary skill would have been motivated to use the Park reflective material in Lisogurski's device to improve the device's performance without increasing its power consumption. Ex. 1003 ¶¶ 213–215.

3. Claims 10 and 14

Claim 10 depends from claim 7 and further requires that the system comprise "a reflective surface configured to reflect at least a portion of light reflected from the tissue." Ex. 1001, 34:21–23. Claim 14 depends from claim 13 and, similarly to claim 10, further requires the system of claim 13 comprise "a reflective surface positioned to reflect at least a portion of light reflected from the tissue." *Id.* at 34:35–37.

Petitioner demonstrates that each of these further limitations is disclosed in Park's description of a reflective surface on the interior, skin-facing side of the Park device so that "light scattered/reflected off the skin side of the device may be scattered/reflected back into the skin in order to, for example, improve the SNR." Pet. 70 (quoting Ex. 1010, 15:49–57).

Patent Owner does not dispute this. *See* PO Resp. 10–37. Petitioner directs us to sufficient evidence to support its contentions. Therefore, we find Petitioner has met its burden of proof on these limitations.

For the reasons detailed above, we find Petitioner has demonstrated by a preponderance of the evidence that the combination of Lisogurski, Carlson, and Park teaches all the limitations of claims 10 and 14 and that claims 10 and 14 are unpatentable over the combination of Lisogurski, Carlson, and Park. Additionally, Petitioner has demonstrated by a preponderance of the evidence that the combination of Lisogurski, Carlson, Mannheimer, and Park teaches all the limitations of claim 14 and that claim 14 is unpatentable over the combination of Lisogurski, Carlson, Mannheimer, and Park.

III. CONCLUSION[5]

We have reviewed the Petition, Patent Owner Response, Petitioner Reply, and Patent Owner Sur-Reply. We have considered all of the evidence and arguments presented by Petitioner and Patent Owner, and have weighed and assessed the entirety of the evidence as a whole.

We determine, on this record, that Petitioner has demonstrated by a preponderance of evidence that claims 7 and 11–13 of the ’299 patent are

[5] Should Patent Owner wish to pursue amendment of the challenged claims in a reissue or reexamination proceeding subsequent to the issuance of this decision, we draw Patent Owner’s attention to the April 2019 *Notice Regarding Options for Amendments by Patent Owner Through Reissue or Reexamination During a Pending AIA Trial Proceeding*. *See* 84 Fed. Reg. 16,654 (Apr. 22, 2019). If Patent Owner chooses to file a reissue application or a request for reexamination of the challenged patent, we remind Patent Owner of its continuing obligation to notify the Board of any such related matters in updated mandatory notices. *See* 37 C.F.R. § 42.8(a)(3), (b)(2).

unpatentable over Lisogurski and Carlson; that claims 12 and 13 of the ’299 patent are unpatentable over Lisogurski, Carlson, and Mannheimer; that claims 10 and 14 of the ’299 patent are unpatentable over Lisogurski, Carlson, and Park; and that claim 14 of the ’299 patent is unpatentable over Lisogurski, Carlson, Mannheimer, and Park.

IV. ORDER

In consideration of the foregoing, it is hereby:

ORDERED that claims 7 and 11–13 of the ’299 patent are unpatentable under 35 U.S.C. § 103(a) as obvious over Lisogurski and Carlson;

FURTHER ORDERED that claims 12 and 13 of the ’299 patent are unpatentable under 35 U.S.C. § 103(a) as obvious over Lisogurski, Carlson, and Mannheimer; and

FURTHER ORDERED that claims 10 and 14 of the ’299 patent are unpatentable under 35 U.S.C. § 103(a) as obvious over Lisogurski, Carlson, and Park; and

FURTHER ORDERED that claim 14 of the ’299 patent is unpatentable under 35 U.S.C. § 103(a) as obvious over Lisogurski, Carlson, Mannheimer, and Park; and

FURTHER ORDERED that this Decision is final, and a party to this proceeding seeking judicial review of the Decision must comply with the notice and service requirements of 37 C.F.R. § 90.2.

In summary:

Claims	35 U.S.C. §	Reference(s)/Basis	Claims Shown Unpatentable	Claims Not shown Unpatentable
7, 11–13	103	Lisogurski, Carlson	7, 11–13	
12, 13	103	Lisogurski, Carlson, Mannheimer	12, 13	
10, 14	103	Lisogurski, Carlson, Park	10, 14	
14	103	Lisogurski, Carlson, Mannheimer, Park	14	
Overall Outcome			7, 10–14	

UNITED STATES PATENT AND TRADEMARK OFFICE

BEFORE THE PATENT TRIAL AND APPEAL BOARD

APPLE INC.,
Petitioner,

v.

OMNI MEDSCI, INC.,
Patent Owner.

IPR2020-00175
Patent 10,188,299 B2

Before GRACE KARAFFA OBERMANN, JOHN F. HORVATH, and SHARON FENICK, *Administrative Patent Judges.*

HORVATH, *Administrative Patent Judge*, concurring

I concur with the panel decision, and write separately to express additional reasons I find Lisogurski alone or in combination with Carlson teaches the pulse rate limitation.

A. Lisogurski alone

As noted in § II.D.2.i(1) of the panel decision, Petitioner contends that Lisogurski alone teaches the pulse rate limitation. *See* Pet. 48–49. Although Patent Owner disputes this contention, Patent Owner nevertheless stated in its Preliminary Response that Lisogurski teaches "three different techniques for improving SNR," including "by modulating the light signal to correlate

with 'physiological pulses' such as a 'cardiac pulse.'" Prelim. Resp. 16. Petitioner argues this statement is an admission that Lisogurski teaches the pulse rate limitation, e.g., by increasing the LED pulse rate to match an increased cardiac cycle rate. *See* Pet. Reply 9.

I agree. Patent Owner's statement characterizing Lisogurski is an admission by a party-opponent under the Federal Rules of Evidence, which apply to this proceeding. *See* 37 CFR § 42.62(a). Petitioner offers the statement "against an opposing party." Fed. R. Evid. 801(d)(2) (2014); *see also* Pet. Reply 9 ("Omni has . . . admitted that one of the purposes of cardiac cycle modulation is to increase SNR."). The statement was made in Patent Owner's Preliminary Response by Patent Owner's designated counsel, who was appointed by Patent Owner "to transact all business . . . associated with any *inter partes* review . . . before the Patent Trial & Appeal Board pertaining to the above-captioned ['299] patent." Prelim. Resp. 16, 41; Paper 5, 1–2. Thus, the statement was made by an "agent or employee on a matter within the scope of that relationship and while it existed." Fed. R. Evid. 801(d)(2)(D) (2014). This makes the statement an admission that Lisogurski's light source is configured to increase signal-to-noise by increasing the LED firing rate to match an increased cardiac cycle rate. *See Cook Group Inc. v. Boston Scientific Scimed, Inc.*, 809 F. App'x 990, 1000 (Fed. Cir. 2020) ("It is well established . . . that a statement made by a party in an individual or representative capacity may be offered as evidence against that party. We hold, therefore, that an admission in a preliminary patent owner response, just like an admission in any other context, is evidence appropriately considered by a factfinder." (internal citations omitted); *see also Nekolny v. Painter*, 653 F.2d 1164, 1172 (7th Cir. 1981) (finding admissions are credible evidence because "an agent or servant who

speaks on any matter within the scope of his agency or employment during the existence of that relationship, is unlikely to make statements damaging to his principal or employer unless those statements are true");

B. Lisogurski and Carlson

As also noted in § II.D.2.i(2) of the panel decision, Petitioner also argues that the combination of Lisogurski and Carlson teaches the pulse rate limitation. *See* Pet. 50–52. In our Institution Decision, we made a preliminary finding that Petitioner was reasonably likely to show how the combination of Lisogurski and Carlson teaches the pulse rate limitation because Carlson teaches it. *See* Dec. Inst. 48–52. Specifically, we found:

> Carlson teaches that "standard pulsoximeter sensors suffer from signal instability and insufficient robustness versus environmental disturbances," and provides, as an example, disturbances caused when a person wearing a sensor experiences alternating cycles of sunshine and shade "at a certain frequency" while walking or driving along a tree-lined avenue. Ex. 1009 ¶¶ 4, 68. Carlson teaches removing such disturbances by pulsing the sensor LEDs at a frequency that is "outside the frequency spectrum of sunlight[6] and of ambient light" in order to "increas[e] significantly the Signal-to-Noise." *Id.* ¶ 69. Carlson does not teach pulsing the LEDs at any particular frequency, but instead teaches pulsing at some frequency f_0 and "using AC-Coupling or Lock-In Amplification . . . to temporarily modulate the optical radiation of the LED at the carrier frequency f_0 in order to shift the power spectrum of

[6] Carlson identifies the "frequency spectrum" of sunlight as 0 Hz. *See* Ex. 1009, Fig. 7b. We understand this passage of Carlson to be referring to the frequency of alternating periods of sunshine and shade, rather than to the actual frequency spectrum of sunlight, which is quite broad. The frequency spectrum of alternating periods of sunshine and shade would be 0 Hz when a person is standing in continual sunshine or continual shade, but would increase when travelling down a tree-lined street based on the spacing between trees and the speed of travel. *Id.* ¶ 68.

> the pulsoximeter signals into a higher frequency range where environmental optical radiation is unlikely." *Id.* ¶¶ 65, 69. Although Carlson gives a particular example of pulsing the LEDs at 1000 Hz, that example pertains to sampling pulsed LED light that has been transmitted through or reflected from a sample in the presence of 0 to 120 Hz noise. *Id.* ¶ 69. Carlson more generally teaches "shift[ing] the power spectrum of the pulsoximeter signals into a higher frequency range where environmental optical radiation is unlikely."

Dec. Inst. 49–50 (footnote in original).

Patent Owner disagrees with that preliminary analysis, arguing "Carlson does not teach increasing a pulse rate of a light source from an initial pulse rate to increase SNR as claimed." PO Resp. 27 (citing Ex. 2131 ¶¶ 89–92) (emphasis omitted). Patent Owner's argument is two-fold. First, Patent Owner argues that Carlson only teaches "modulating the light source at a chosen single, fixed pulse rate, not a system that increases the pulse rate from an initial pulse rate to increase SNR as claimed." *Id.* (citing Ex. 2131 ¶ 91) (emphasis omitted). Second, Patent Owner argues "temporarily modulat[ing] the previously described unmodulated light source" does not teach "increasing [the light source's] pulse rate from an initial pulse rate." PO Resp. 26–27 (emphasis omitted).

Petitioner replies that Carlson teaches "increasing the SNR of a pulsoximeter to improve its performance in the presence of noise, such as ambient light." Pet. Reply 15 (citing Pet. 21–22; Ex. 1009 ¶ 2). Petitioner argues that Carlson's "device is designed to address changing environmental conditions" because Carlson teaches "the amount of ambient light varies over time." *Id.* (citing Ex. 1009 ¶ 7) (emphasis omitted). For example, Carlson teaches its "device 'temporarily modulate[s] the amplitude of the optical radiation of, e.g., the LED at a carrier frequency f_c in order to shift

the power spectrum of the pulsoximeter signals into a higher frequency range where environmental optical radiation is unlikely." *Id.* (citing Ex. 1009 ¶ 20) (emphasis omitted). Petitioner interprets this to mean the "device will change how its LEDs pulse based on the presence and characteristics of ambient light at any particular moment in time," and will do so by "shifting the frequency of an LEDs emission 'to a higher frequency range.'" *Id.* at 15–16 (citing Ex. 1009 ¶¶ 20, 68).

Petitioner argues its interpretation of Carlson is supported by claims 10–13 of Carlson, which recite "a light source amplitude modulating means to modulate the frequency of the emitted light" that can "shift the frequency of the emitted light." *Id.* at 17 (citing Ex. 1009, 6[7] (claims 10–13)) (emphasis omitted). Moreover, Petitioner argues that "[b]ecause the nature of ambient light changes over time, it would be natural to interpret Carlson as describing multiple pulse frequencies." *Id.* at 17–18. Petitioner cites the testimony of Dr. MacFarlane, Patent Owner's expert, to support this contention. *Id.* According to Dr. MacFarlane, "[b]ecause sunlight variations and the weather are constantly changing environmental conditions, it would be impractical, as a matter of common sense, to have the user manually reconfigure the LED pulse rate as conditions change." Ex. 1065, 34:5–35:7.

Patent Owner argues we should ignore claims 10–13 of Carlson and Dr. MacFarlane's "common sense" testimony because they were not relied on in the Petition. PO Sur-Reply 12–15.

As an initial matter, I disagree that the arguments presented in Petitioner's Reply are improper new arguments that should be ignored.

---

[7] The citation here is to Carlson's page number and claim number because the claims do not have separately numbered paragraphs.

Petitioner argued—*in the Petition*—that Carlson teaches increasing the pulse rate of an LED. *See* Pet. 50 ("Figure 8 of Carlson shows increasing the operating frequency F_0 of the LEDs as compared to Fig. 7c," and "[t]his change in frequency . . . corresponds to increasing the '*pulse rate*' of the emitter" LEDs). Although Petitioner supports this argument with new evidence in its Reply, the Reply does not raise a new issue or argument. *See Chamberlain Group, Inc. v. One World Techs., Inc.*, 944 F.3d 919, 925 (Fed. Cir. 2019) ("Parties are not barred from elaborating on their arguments on issues previously raised."). Moreover, Patent Owner has had an adequate opportunity to address this new evidence in its Sur-Reply. *See In re NuVasive, Inc.*, 841 F.3d 966, 972 (Fed. Cir. 2016) (finding "an opportunity to respond was needed when the petitioner . . . newly pointed to a previously unmentioned portion of the . . . prior-art patent, even though it had earlier focused extensively on other portions of that prior-art patent").

Upon consideration of all the evidence and argument presented by Petitioner and Patent Owner, discussed above, I am persuaded that a person of ordinary skill in the art would have understood Carlson to teach a light source configured to increase signal-to-noise in the presence of changing environmental conditions by increasing the modulation frequency or pulse rate of the light source from an initial pulse rate.

I disagree with Patent Owner's contention that Carlson only chooses a "fixed" or "predetermined" value for the LED pulse rate or modulation frequency at design-time. *See* PO Resp. 27–31. The only evidence Patent Owner offers for this contention is Carlson's statement that the modulation frequency is "chosen," and Dr. MacFarlane's opinion that this means a "fixed" value for the modulation frequency is chosen at design-time. *Id.*; *see also* Ex. 2131 ¶¶ 87–92. This evidence is unpersuasive for two reasons.

First, Carlson does not disclose choosing a "fixed" modulation frequency at design-time as Patent Owner contends. Second, Dr. MacFarlane's testimony to that effect is not credible in view of Dr. MacFarlane's testimony regarding how a person of ordinary skill in the art would have designed a light source for use in changing lighting conditions.

Carlson's only teaching about choosing the modulation frequency of the light source is the following: "[I]t is therefore proposed to emit light by the LEDs not as current or continuous light but as pulsed light. The [pulse] frequency is chosen in such a way that it is outside the frequency spectrum of sunlight and of ambient light which, according to FIG 7b, is in the range of above approximately 1000 Hz." Ex. 1009 ¶ 69. Although this passage teaches choosing a 1000 Hz pulse rate, that particular choice is based on the particular power spectrum of the optical noise shown in Figure 7b. *Id.* But Carlson does not teach that that power spectrum is fixed. To the contrary, Carlson teaches "[t]he power spectrum of environmental optical radiation *strongly varies* as a function o[f] time and place where the pulsoximeter is used." *Id*. ¶ 7 (emphasis added). Thus, a person skilled in the art would have read Carlson to teach choosing a run-time pulse rate based on the run-time environmental power spectrum.

Carlson's claims support this interpretation. Claim 10 recites a "light source modulating means to *shift the frequency* of the emitted light." *Id.* at 6 (emphasis added). Claim 11 recites "a light source amplitude modulating means to *modulate the frequency of the emitted light in a frequency range* substantially outside of [the] frequency of noise and/or environmental signals." *Id.* (emphasis added). Given Carlson's teachings that the frequency spectrum of the environmental noise *strongly* depends on run-time conditions, i.e., the time and place where the pulsoximeter is used, claims 10

and 11 teach a person skilled in the art to choose a *run-time* pulse rate that allows the device to operate outside the run-time power spectrum of the environmental noise, and to *shift* that pulse rate, as needed, to continually operate outside the power spectrum of the environmental noise as it *strongly* varies with the pulsoximeter's time and place of use. *Id.* ¶¶ 7, 65; *id.* at 6 (claims 10, 11).

In fact, in the course of explaining how the '299 patent's light source "achieve[s] higher SNR despite 'variations due to sunlight' and the 'effects of weather, such as clouds and rain,'" Dr. MacFarlane coherently explains *why* a person skilled in the art would have read Carlson to teach choosing a run-time pulse rate rather than a fixed design-time pulse rate. Ex. 2131 ¶ 36. According to Dr. MacFarlane, the '299 patent's light source increases its pulse rate to increase signal-to-noise "[b]ecause sunlight variations and the weather are *constantly changing environmental conditions*, [and] it would be impractical—as a matter of common sense—to have the user manually reconfigure the LED pulse rate as conditions change to achieve higher SNR." *Id.* (emphasis added). Dr. MacFarlane testifies that a person skilled in the art would never "ask[] a consumer to learn what SNR is and force that consumer to -- adjust it as a cloud moves across the sun and then back again." Ex. 1065, 36:1–7. That, Dr. MacFarlane says, "would be impractical and not a very nice product design to -- to -- to force your user to do that. And that seems -- that seems a matter of common sense, to me, but, again, that's from the perspective of a person of ordinary skill in the art." *Id.* at 36:9–13.

To understand why this testimony supports Petitioner's interpretation of Carlson, it is necessary to first explore how Dr. MacFarlane finds support for the pulse rate limitation in the '299 patent, including in the two

publications incorporated into the ’299 patent. *See* Ex. 2122 ¶¶ 24–25, 34–35 (citing Ex. 1001, 1:22–44, 3:11–16, 22:43–45, 29:3–4; Ex. 2120 ¶ 79; Ex. 2121 ¶ 45). The cited passage in column 3 of the ’299 patent identically supports the pulse rate limitation because it repeats it verbatim. *Compare* Ex. 1001, 3:11–16, *with id.* at 33:65–34:3. However, this passage was added to the Specification by amendment without indicating how it was supported by the original application. *See Apple Inc. v. Omni MedSci*, IPR2019-00916, Paper 39 at 10 (PTAB, Oct. 14, 2020).

The remaining passages cited by Dr. MacFarlane do not disclose a light source configured to increase signal-to-noise by increasing its pulse rate from an initial pulse rate. The cited passage in column 22 states that LEDs can be operated in “continuous wave or pulsed mode,” but does not state the pulse rate can be increased from an initial pulse rate to increase signal-to-noise.[8] Ex. 1001, 22:43–45. The cited passage from the PCT application that is incorporated by reference states:

> By use of an active illuminator, a number of advantages may be achieved. First the variations due to sunlight and time-of-day may be factored out. The effects of the weather, such as clouds and rain, might also be reduced. Also, high signal-to-noise ratios may be achieved. For example, one way to improve the signal-to-noise ratio would be to use modulation and lock-in techniques. In one embodiment, the light source may be modulated, and then the detection system would be synchronized with the light source. In a particular embodiment, the techniques from lock-in detection may be used, where narrow band filtering around the modulation frequency may be used to reject noise outside the modulation frequency.

[8] Carlson also discloses operating LEDs in either continuous or pulsed mode. *See* Ex. 1009 ¶ 69 (proposing to emit LED light “not as current or continuous light but as pulsed light”).

Ex. 2021 ¶ 79. Although this passages states that the active illuminator increases signal-to-noise by modulating the light source, it does not state that it does so by increasing the modulation or pulse rate from an initial pulse rate.[9] The cited passage in column 29 of the '299 patent closely follows the cited passage from the PCT publication discussed above. *Compare* Ex. 1001, 29:3–12, *with* Ex. 2021 ¶ 79. It, therefore, also fails to disclose increasing signal-to-noise by increasing the LED pulse rate from an initial pulse rate. Finally, the cited passage from the published patent application that is incorporated by reference states "continuous-wave systems emit light at approximately constant intensity or modulated at low frequencies, such as 0.1–100 kHz." Ex. 2121 ¶ 45.[10] This does not state that the pulse rate of the light source is increased from an initial pulse rate to increase signal-to-noise.

Accordingly, for the reasons discussed above, the only evidence that supports Dr. MacFarlane's conclusion that a person of ordinary skill in the art would have understood the '299 patent discloses a light source that increases signal-to-noise by increasing its pulse rate from an initial pulse rate

---

[9] Carlson also discloses using modulation, lock-in techniques, and filtering to increase signal-to-noise. *See* Ex. 1009 ¶ 65 ("using AC-Coupling or Lock-In Amplification . . . to temporarily modulate the optical radiation of the LED"), ¶ 69 (modulating the LED at a pulse rate f_o that is "outside the frequency spectrum of sunlight and ambient light" in order to "increas[e] significantly the Signal-to-Noise"), ¶ 70 (using a band-pass filter to recover "measurements in the range of f_o-5 Hz to f_o+5 Hz"). According to Carlson, such lock-in detection techniques were "well known out of the state of the art." *Id.* ¶ 65.

[10] Carlson also discloses that LEDs can be operated at constant intensity or pulsed at different pulse rates. *See* Ex. 1009 ¶ 69 (proposing to emit LED light "not as current or continuous light but as pulsed light" and disclosing the pulse rate "could be e.g., as mentioned, 1000 Hz" or "can be chosen at any other frequency, as e.g. 2000 Hz or even higher").

is Dr. MacFarlane's testimony that doing so would have been "common sense" that was within the knowledge of a person of ordinary skill in the art.

As discussed above, Carlson teaches modulating (pulsing) LEDs to reduce interference caused by sunlight and ambient light, which vary with the time and place of use, in order to increase signal-to-noise. *See* Ex. 1009 ¶ 2 (discussing concerns with the "robustness of the measurement signal versus environmental disturbances"), ¶ 67 (identifying "sunlight and ambient light" as interference), ¶ 7 (indicating this interference "*strongly varies* as a function o[f] time and place where the pulsoximeter is used" (emphasis added)), ¶ 65 (disclosing "temporarily modulat[ing] the . . . LED at the carrier frequency f_c in order to shift the power spectrum of the pulsoximeter signals into a higher frequency range where environmental optical radiation is unlikely"). Carlson, therefore, chooses a modulation frequency f_c "that it is outside the frequency spectrum of sunlight and ambient light" using a light source modulating means that "shift[s] the frequency of the emitted light" and "modulate[s] the frequency of the emitted light in a frequency range substantially outside of the frequency of noise and/or environmental signals." *Id.* ¶ 69 (emphasis added); *id.* at 6 (claims 10, 11).

Yet, despite all of Carlson's teachings about the variable frequency spectrum of interference caused by sunlight and how it can be reduced by modulating the LEDs at a chosen pulse rate, and despite Dr. MacFarlane's testimony that a person skilled in the art would never "ask[] a consumer to learn what SNR is and force that consumer to -- adjust it as a cloud moves across the sun and then back again," Dr. MacFarlane opines that a person skilled in the art would have read Carlson as choosing a "fixed" design-time pulse rate rather than a run-time pulse rate. *See* Ex. 1065, 36:1–7; *see also*

Ex. 2131 ¶¶ 87–92. That is, Dr. MacFarlane opines that a person skilled in the art would have read Carlson to teach choosing a "fixed" pulse rate that either will or will not improve signal-to-noise because it either will or will not shift the pulsoximeter power spectrum beyond the run-time power spectrum of the environmental noise. This is not a credible reading of Carlson. A more credible reading is that a person of ordinary skill in the art would have read Carlson to teach choosing a run-time pulse rate that *will* improve the signal-to-noise ratio because it *will* shift the pulsoximeter power spectrum beyond the run-time power spectrum of the environmental noise, and to teach updating the pulse rate, as needed, to maintain a pulse rate that is greater than the highest frequency component of the constantly varying power spectrum of the environmental noise.

In addition to disagreeing with Patent Owner's contention that Carlson only teaches switching from continuous light to light modulated at 1000 Hz for the reasons explained above, I also disagree with Patent Owner's contention that such switching does not increase the pulse rate of the light source from an initial pulse rate. Implicit in Patent Owner's contention is the contention that a light source emitting continuous light does not have an initial pulse rate or that 0 Hz cannot be an initial pulse rate. This contention is contrary to the teachings of Carlson. Figure 7b of Carlson is reproduced below.

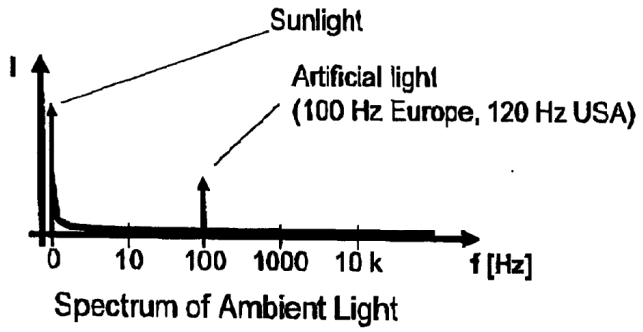

Figure 7b is "a diagram showing [the] power spectrum of ambient light." Ex. 1009 ¶ 43. In the power spectrum shown in Figure 7b, the noise contribution due to "[s]unlight is 0 Hz." *Id.* ¶ 67, Fig. 7b. The power spectrum shown in Figure 7b is exemplary, however, because Carlson more generally teaches that sunlight contributes noise at its modulation frequency, i.e., at the frequency with which a pulsoximeter is illuminated with alternating periods of sunlight and shade. *See id.* ¶ 68 ("Another serious possibility is caused by a tree avenue when driving along the trees. Sunlight is then received, e.g., by the pulsoximeter sensor at *a certain frequency*, which means that every time when passing a tree, sunlight is attenuated and between trees sunlight is influencing the measurement of the pulsoximetric sensor.") (emphasis added).

In our Institution Decision, we made a preliminary finding that Figure 7b of Carlson teaches sunlight contributes noise at 0 Hz when pulsoximeter measurements are taken in either continuous sunshine or continuous shade. *See* Dec. Inst. 50, n.2 ("The *frequency spectrum* of alternating periods of sunshine and shade *would be 0 Hz* when a person is standing *in continual sunshine or continual shade*, *but would increase when travelling down a tree-lined street* based on the spacing between trees and the speed of travel.") (emphases added). Carlson's teaching that, e.g., continuous sunlight contributes noise at a frequency of 0 Hz is a teaching that the

modulation frequency of sunlight received at constant intensity is 0 Hz. That is, Carlson teaches that constant intensity light has a modulation frequency or pulse rate of 0 Hz. Therefore, even under Patent Owner's narrow interpretation of Carlson, in which signal-to-noise is increased by switching from continuous (constant intensity) light to light whose intensity is modulated at 1000 Hz, Carlson teaches increasing signal-to-noise by increasing the pulse rate of the light source from an initial pulse rate of 0 Hz (no modulation) to a pulse rate of 1000 Hz.

For PETITIONER:

Jeffrey Kushan
Ching-Lee Fukuda
Thomas Broughan
SIDLEY AUSTIN LLP
jkushan@sidley.com
clfukuda@sidley.com
tbroughan@sidley.com

For PATENT OWNER:

Thomas Lewry
John LeRoy
Robert Tuttle
John Halan
Christopher Smith
Andrew Turner
BROOKS KUSHMAN P.C.
tlewry@brookskushman.com
jleroy@brookskushman.com
rtuttle@brookskushman.com
jhalan@brookskushman.com
csmith@brookskushman.com
aturner@brookskushman.com