US 20030225379A1

(19) United States

(12) Patent Application Publication

(10) Pub. No.: US 2003/0225379 A1

(43) Pub. Date: Dec. 4, 2003

Schaffer et al.

(54) COMPOSITE STASIS VALVE

(75) Inventors: **David Schaffer**, Coral Springs, FL (US); **Michael Schaffer**, Coral Springs, FL (US); **Brian Fischer**, Minneapolis, MN (US)

Correspondence Address:
Schwegman, Lundberg, Woessner & Kluth, P.A.
P.O. Box 2938
Minneapolis, MN 55402 (US)

(73) Assignee: **MedAmicus, Inc.**

(21) Appl. No.: **10/371,190**

(22) Filed: **Feb. 19, 2003**

Related U.S. Application Data

(60) Provisional application No. 60/357,937, filed on Feb. 19, 2002.

Publication Classification

(51) **Int. Cl.**[7] **A61M 5/00**

(52) **U.S. Cl.** **604/250**

(57) **ABSTRACT**

A valve for blocking the flow of gas or fluid with or without an instrument in place within the gas/fluid path. The valve includes a seal module having a proximal end and a distal end with a lumen sized to allow the passage of fluids or gases.

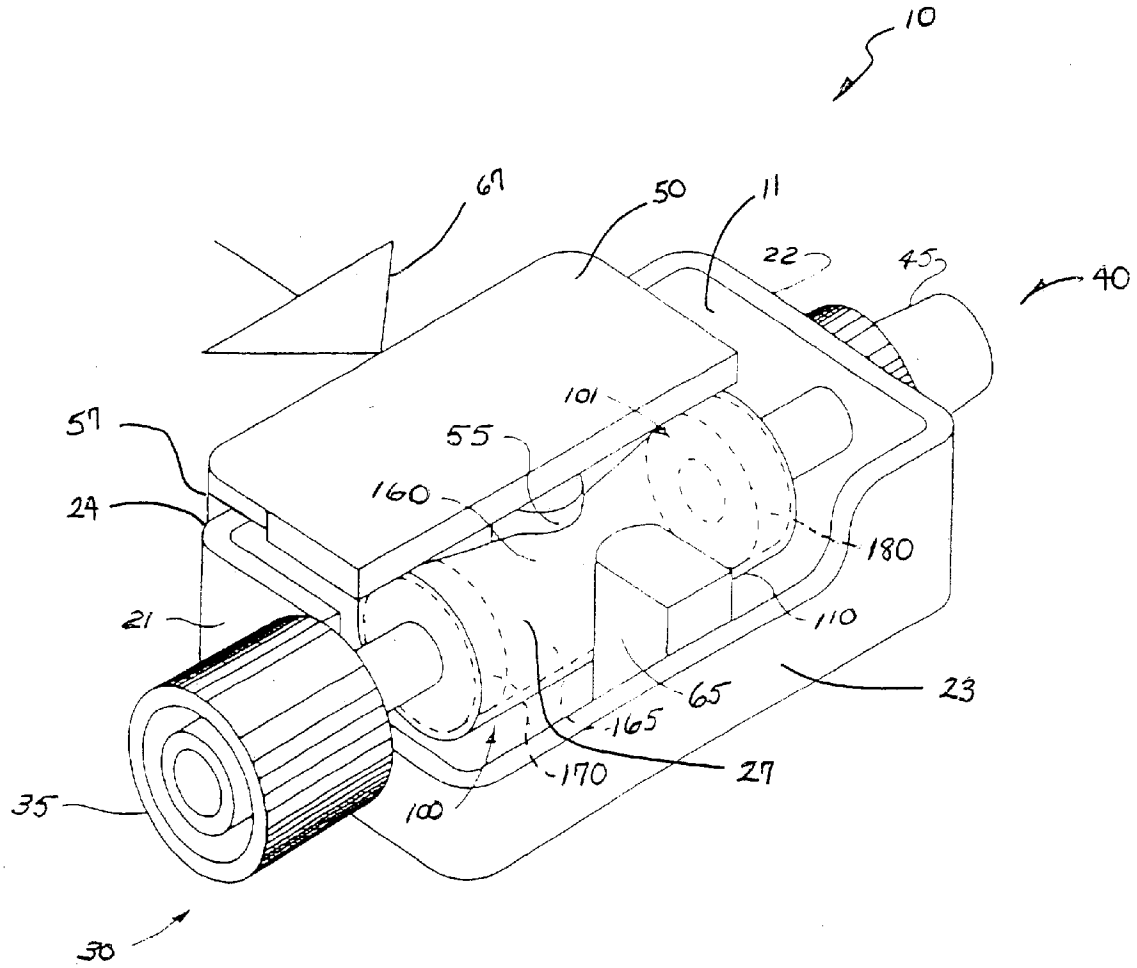

Imperative Care v. Inari Medical
US Patent 12,016,580
Imperative Care Ex. 1007

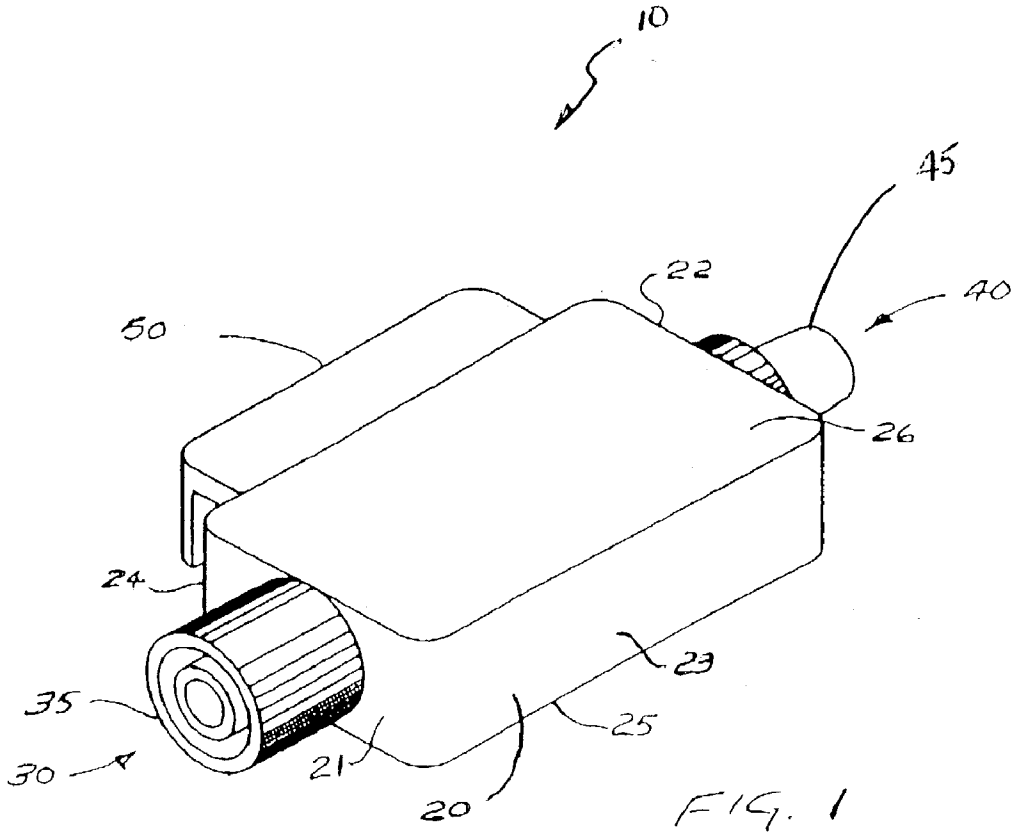
10
45
22
40
50
26
24
23
35
25
30
21
20

FIG. 1

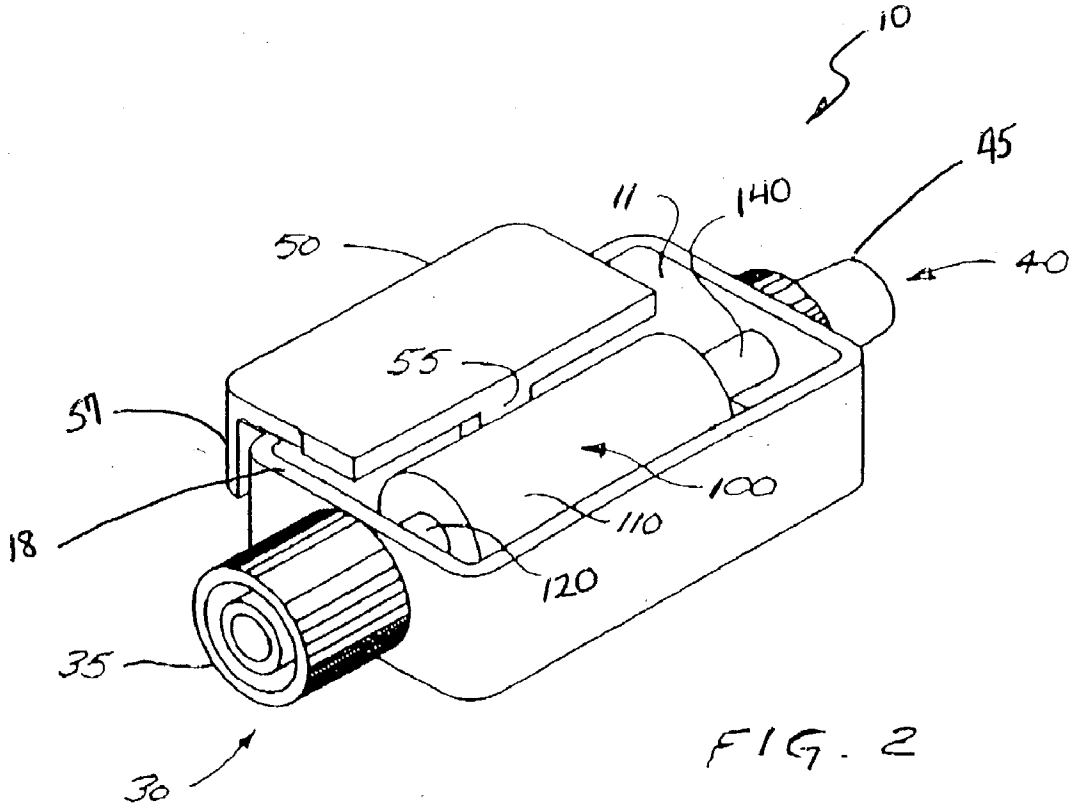
10
45
11
140
50
40
55
57
100
18
110
120
35
30

FIG. 2

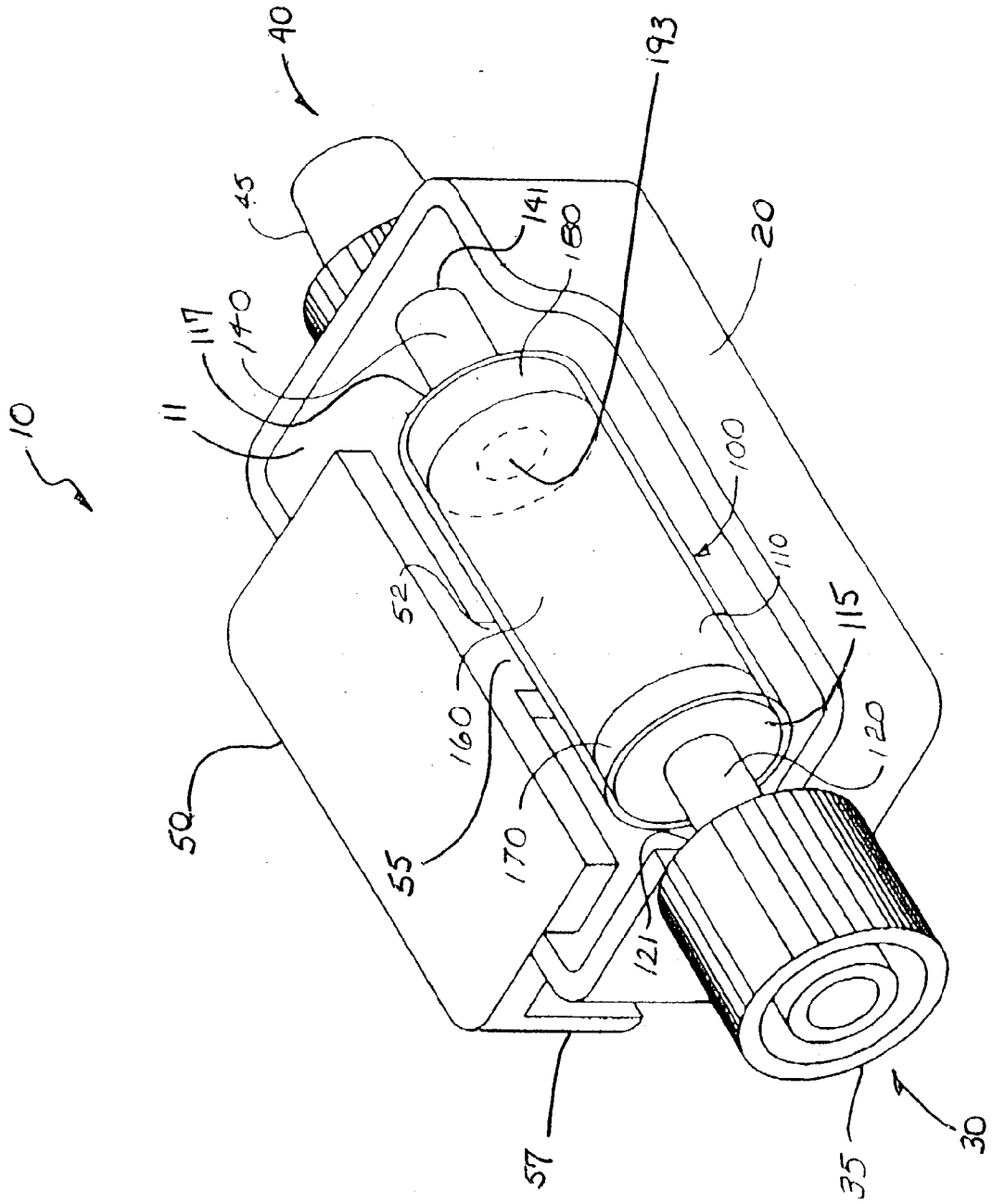
10
11
117
140
45
40
141
180
193
20
100
110
115
120
121
52
160
170
55
50
57
35
30

FIG. 3

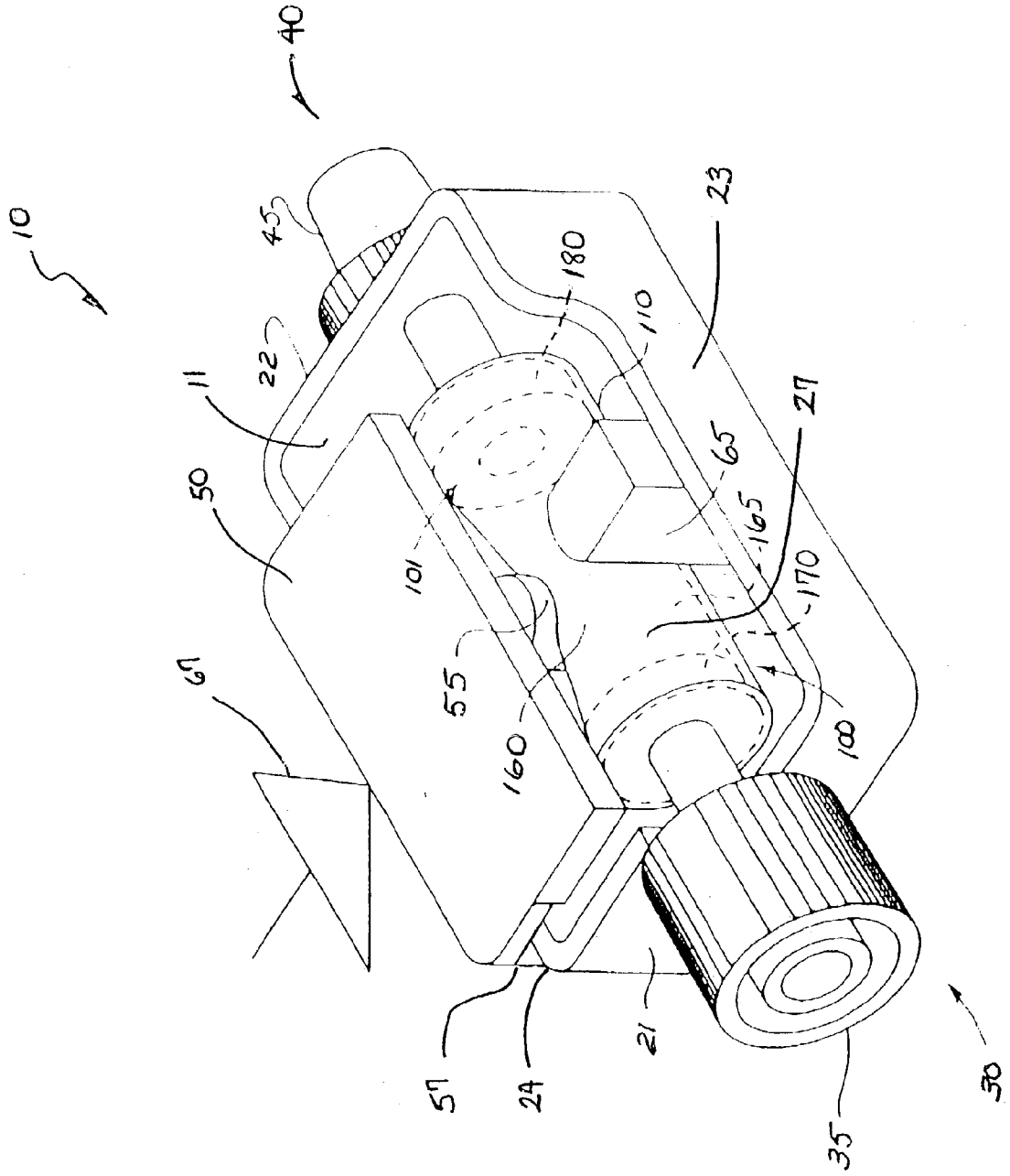
10
40
45
22
11
50
67
180
110
23
27
65
165
170
101
55
160
100
57
24
21
35
30

FIG. 4

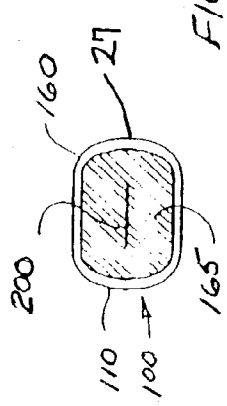

FIG. 8

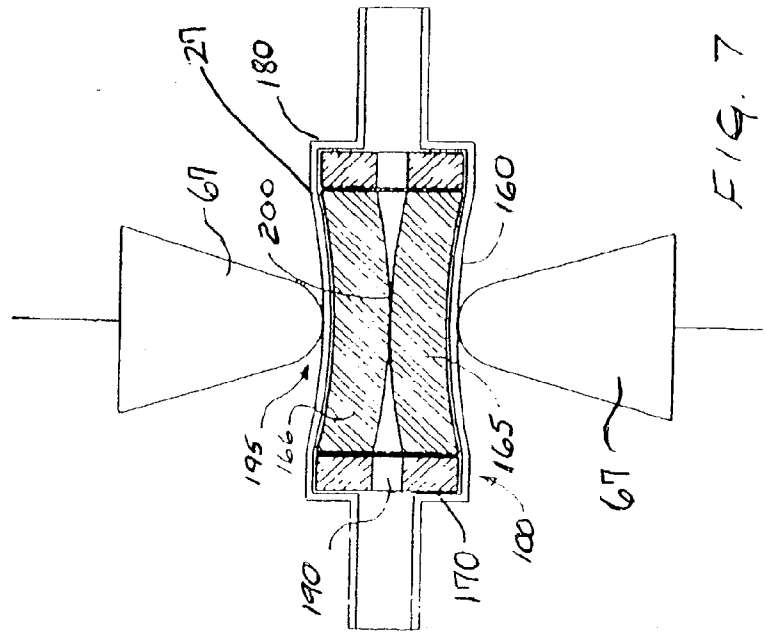

FIG. 7

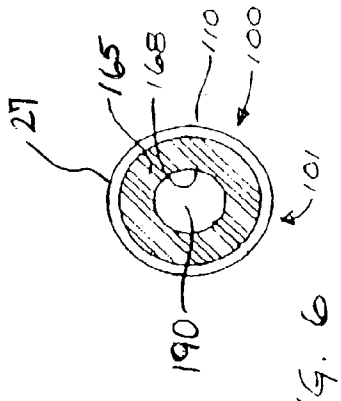

FIG. 6

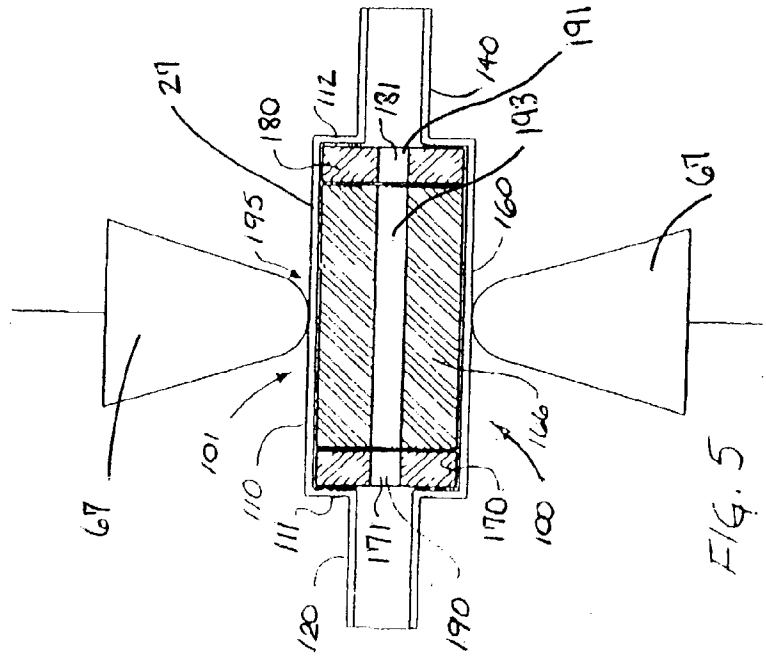

FIG. 5

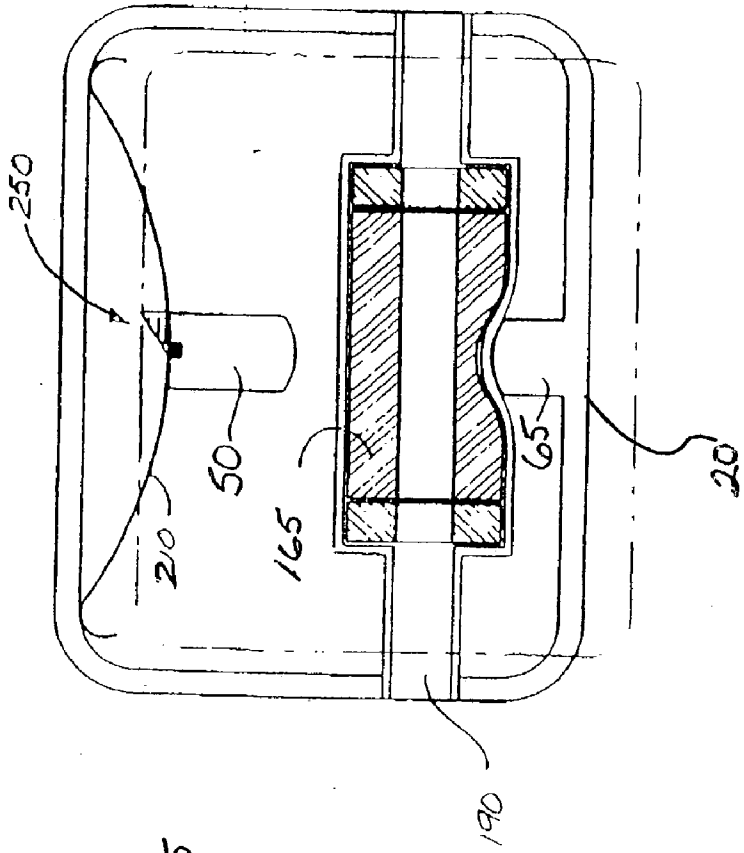

FIG. 9A

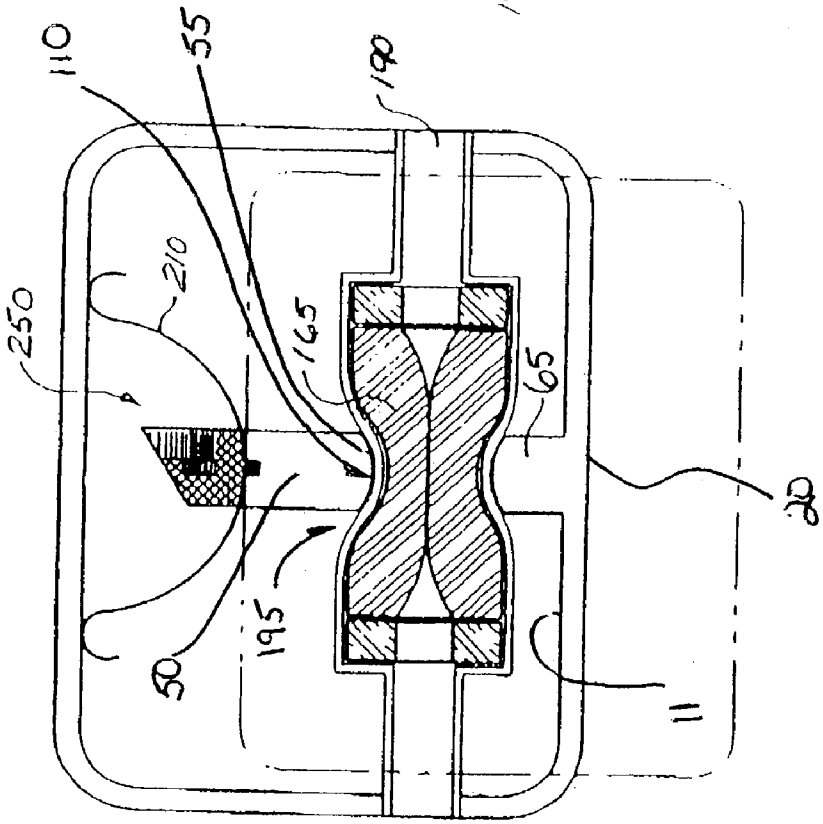

FIG. 10A

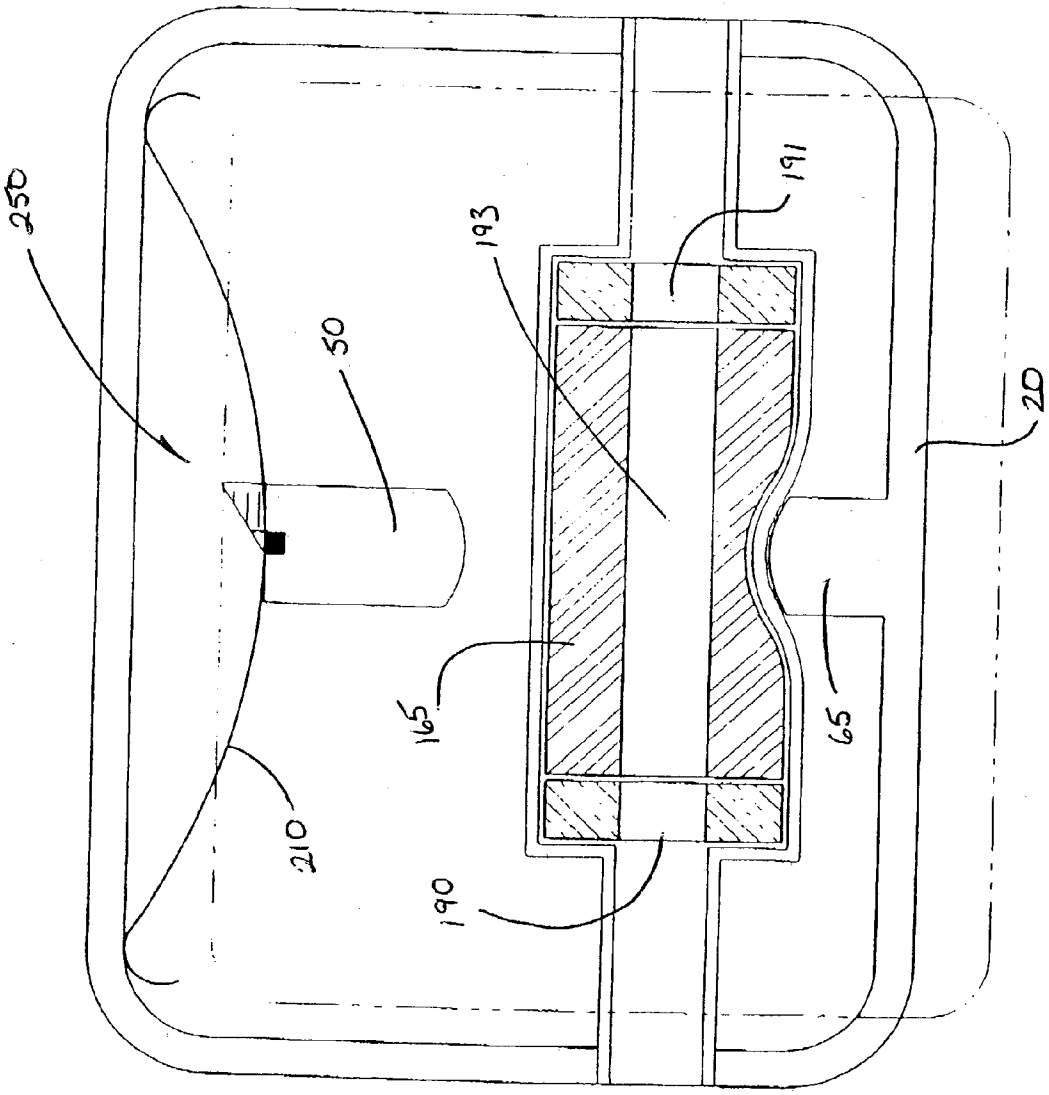

FIG. 9B

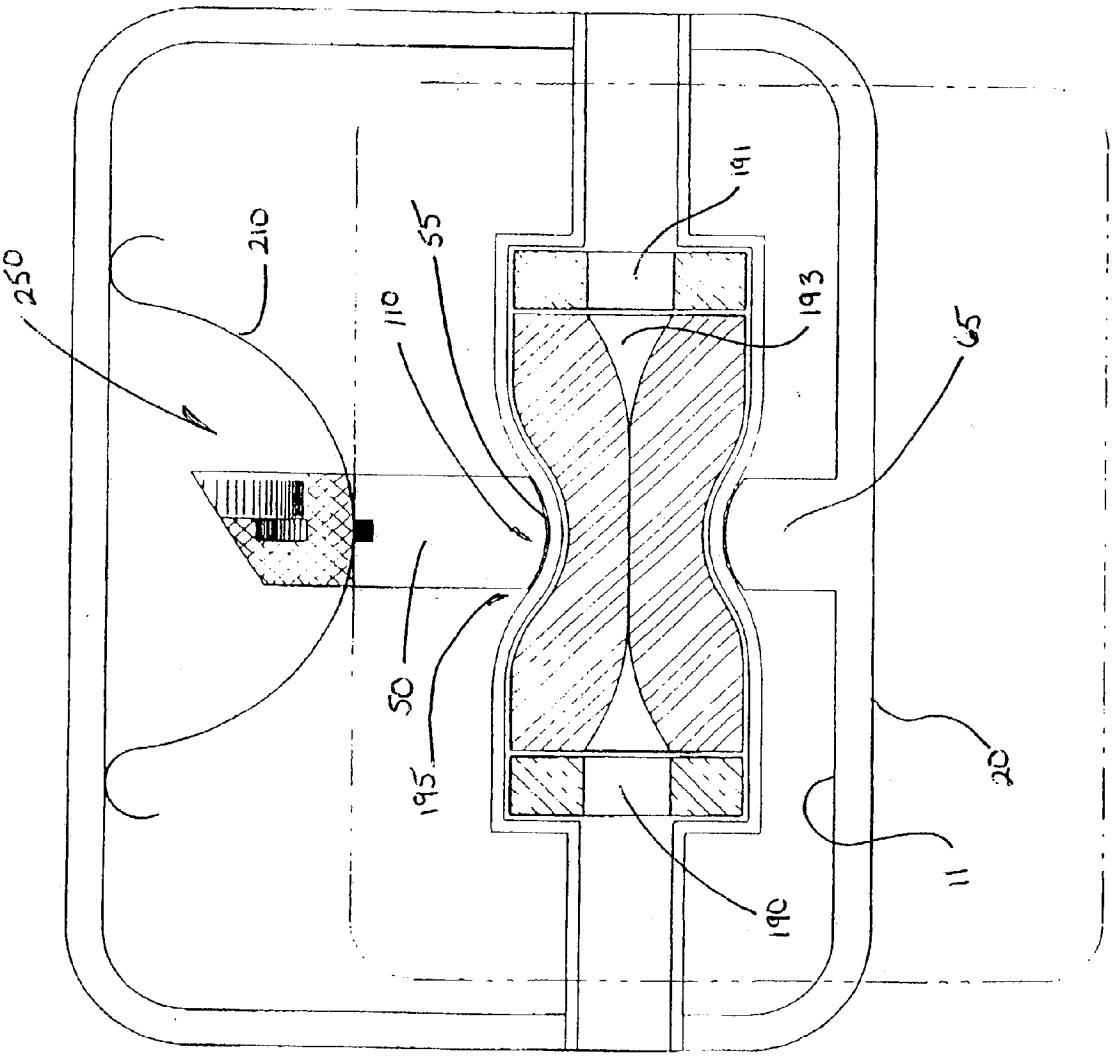

FIG 10B

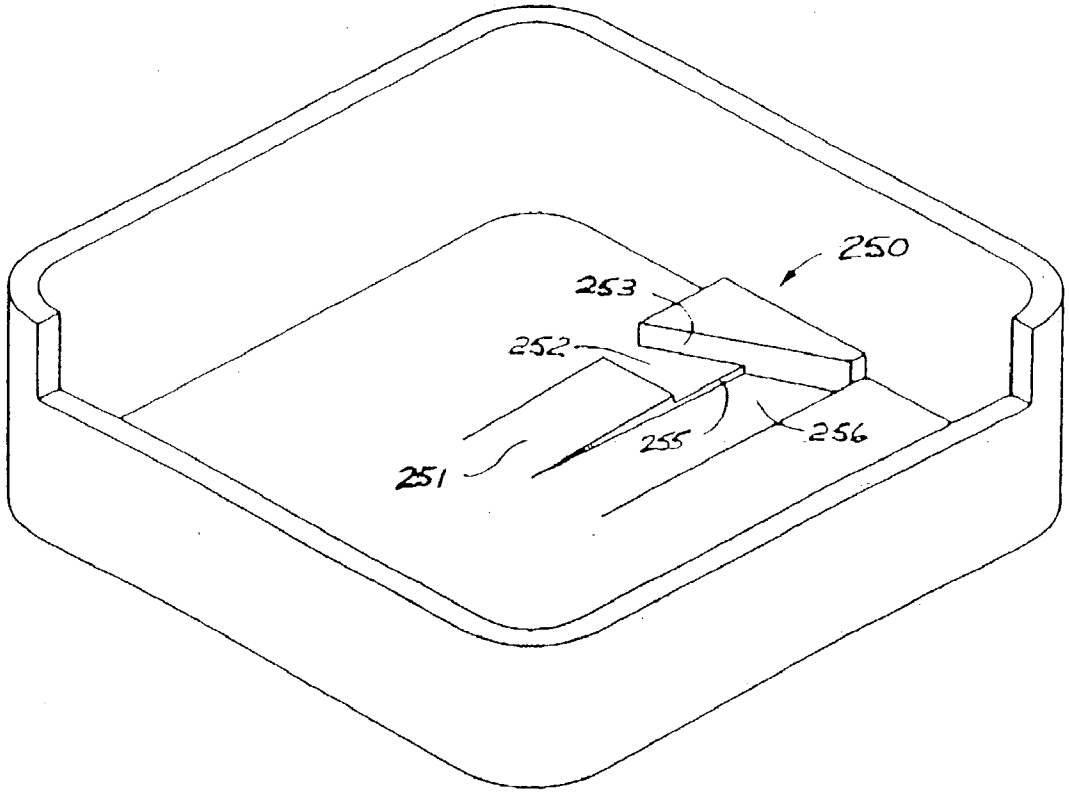

FIG. 11

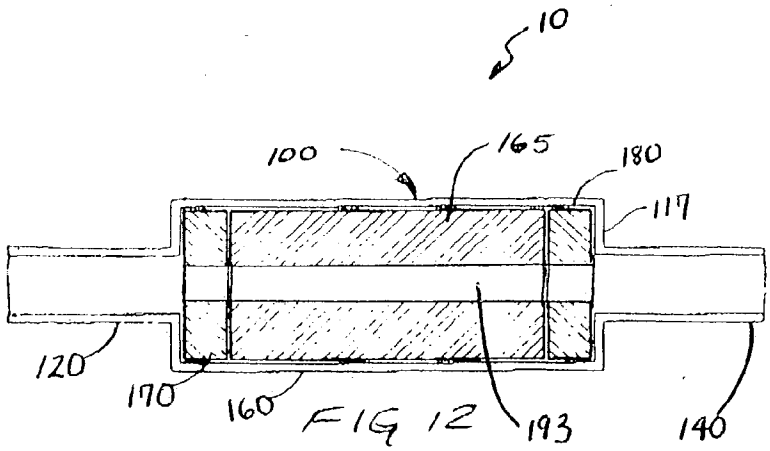

FIG 12

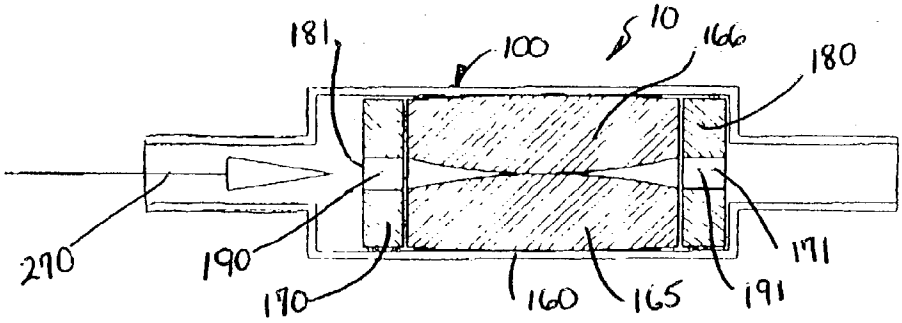

FIG. 13

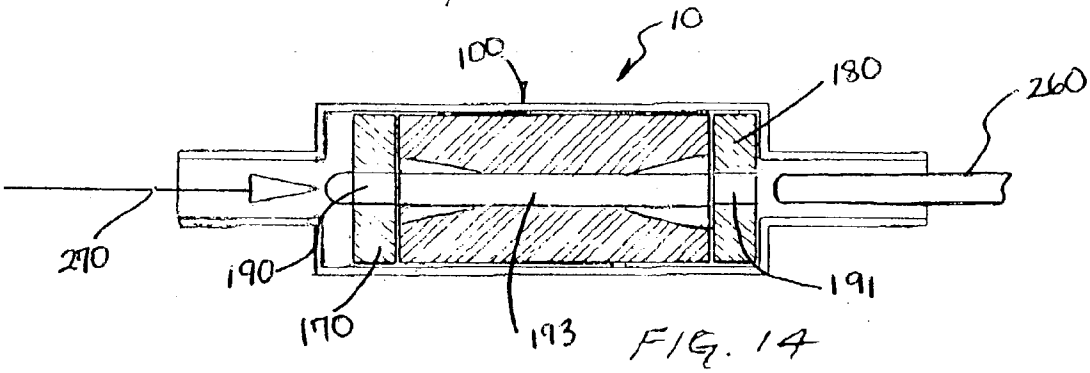

FIG. 14

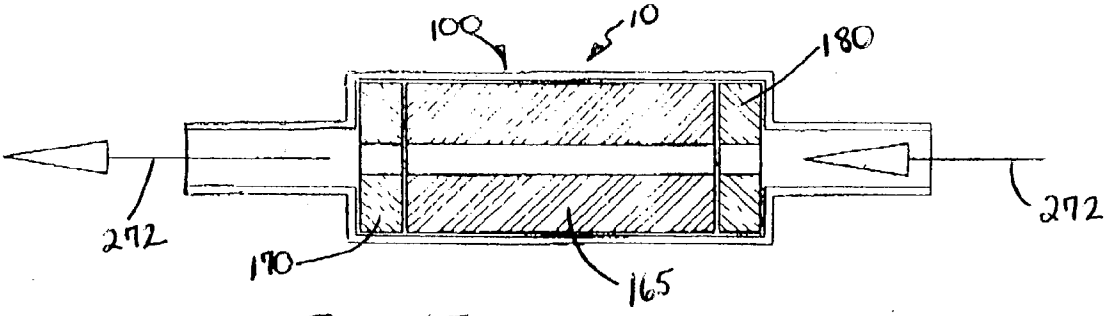

FIG. 15

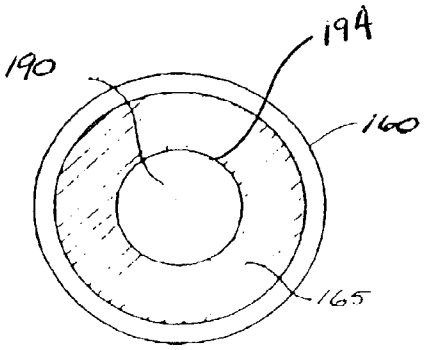

FIG. 16

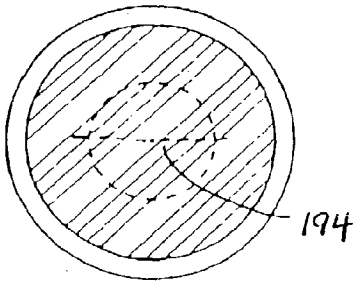

FIG. 17

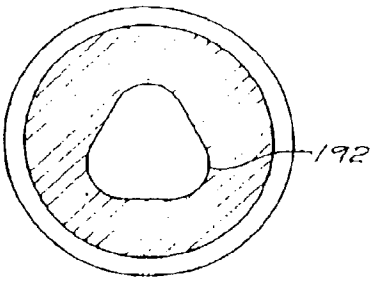

FIG. 18

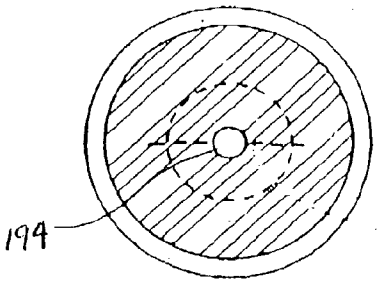

FIG. 19

FIG. 20

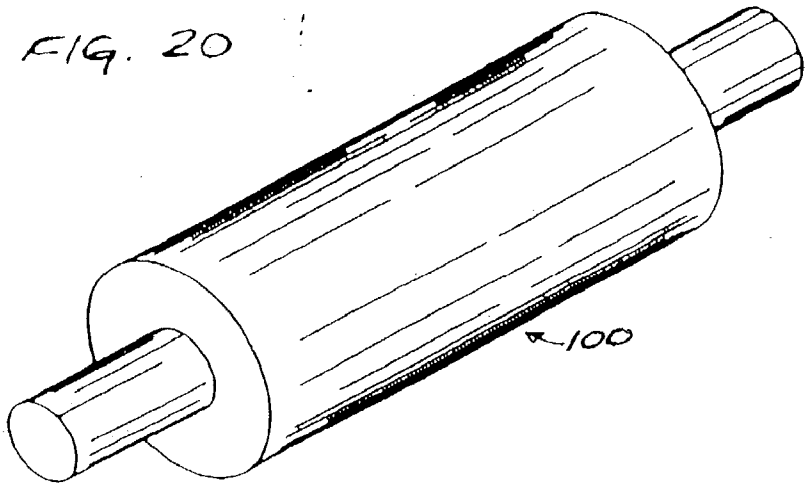

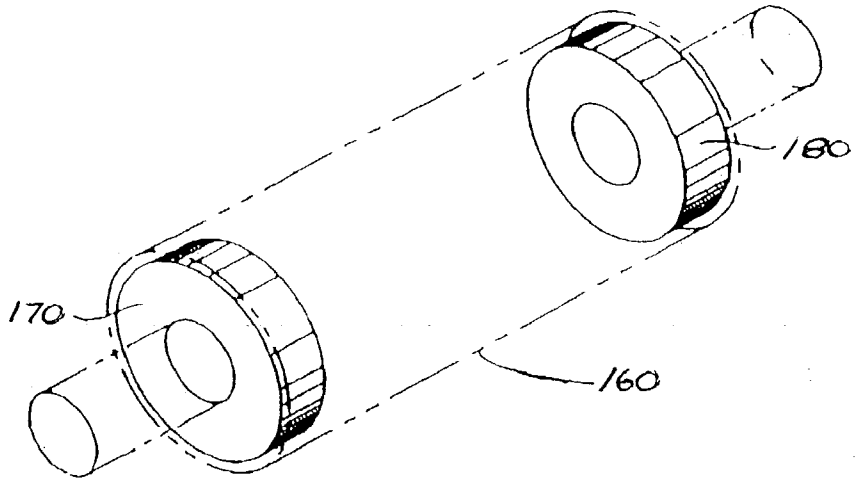

FIG. 21

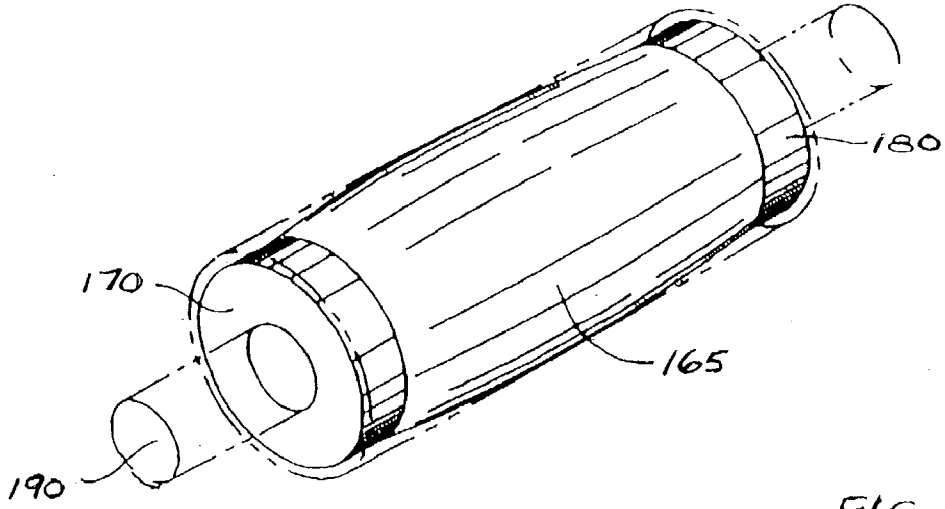

FIG. 22

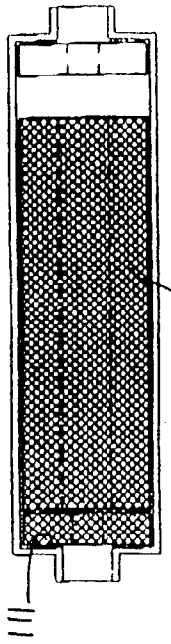

FIG. 25

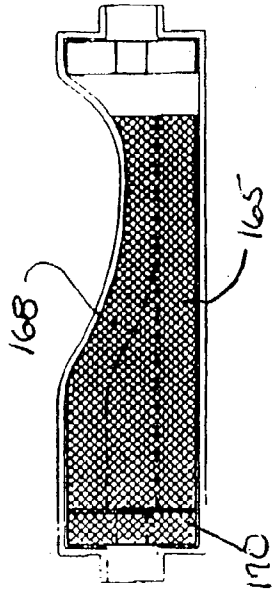

FIG. 26

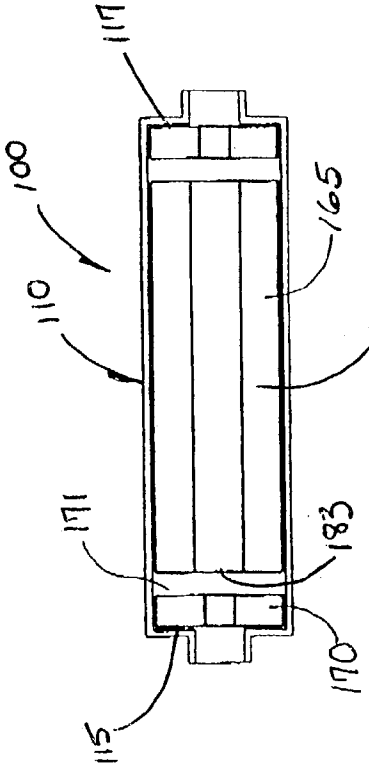

FIG. 23

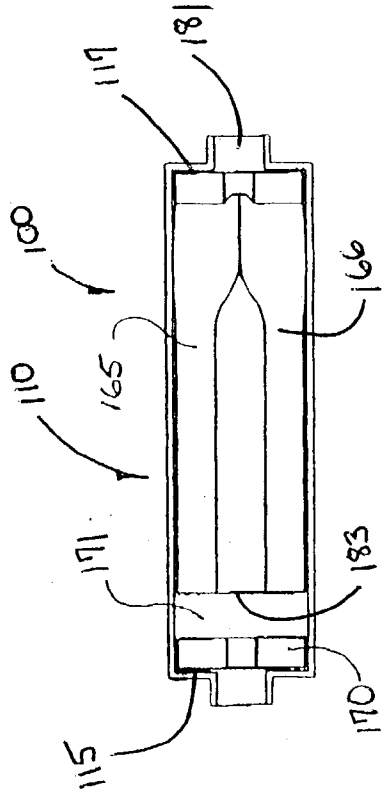

FIG. 24

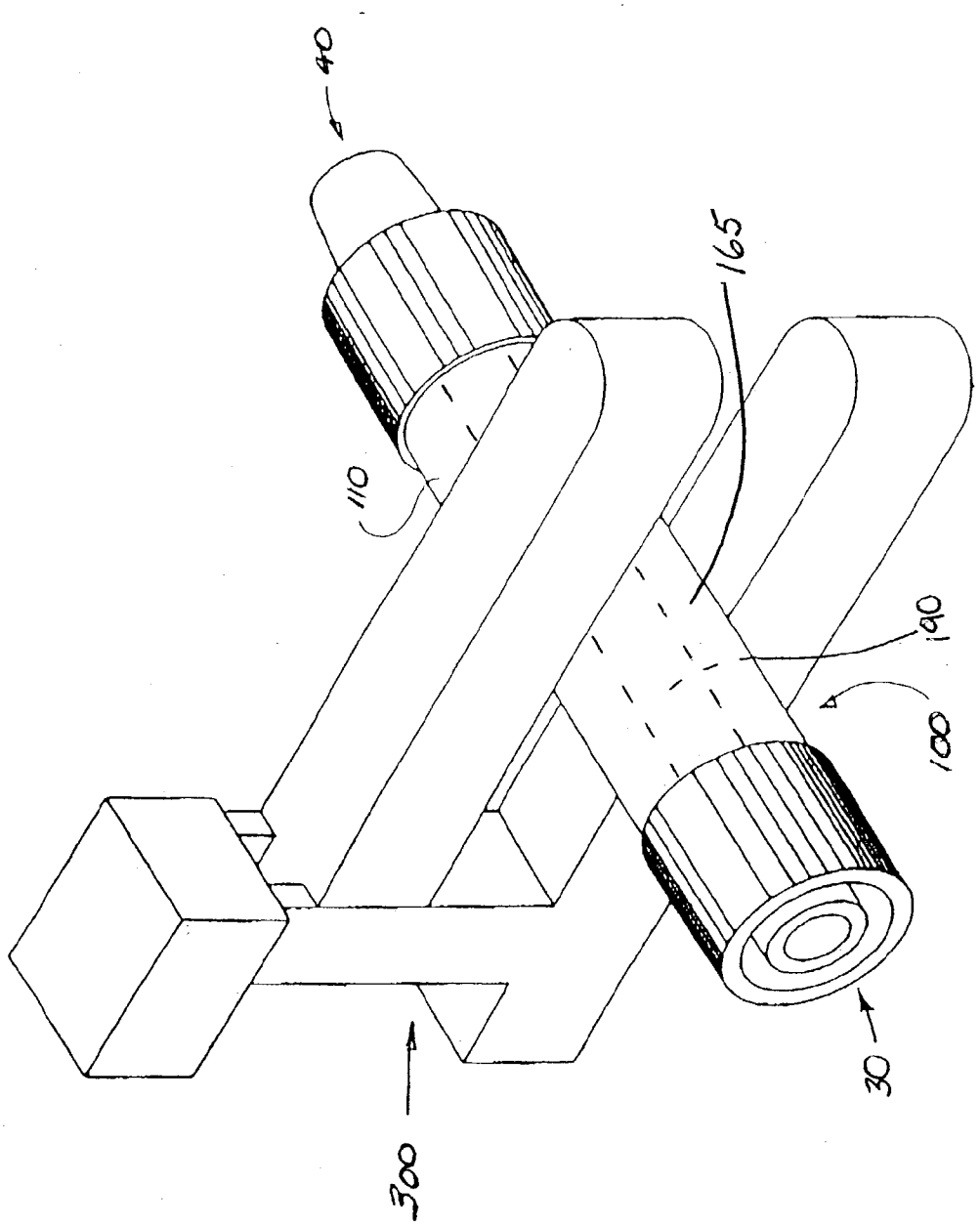

FIG. 27

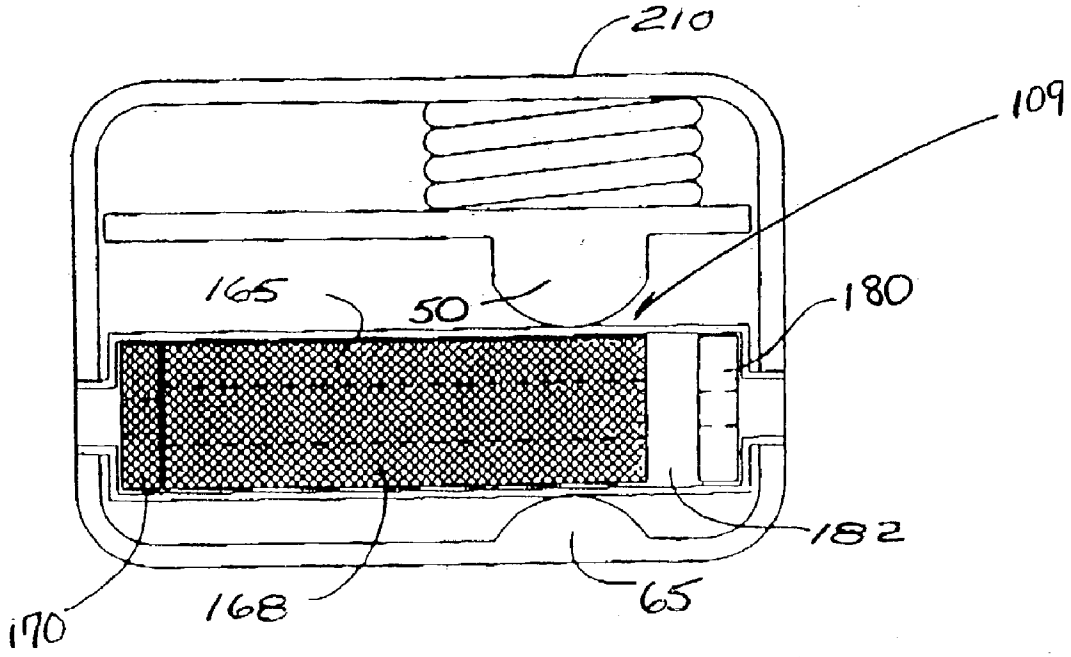
210
109
165
50
180
182
170
168
65

FIG. 28

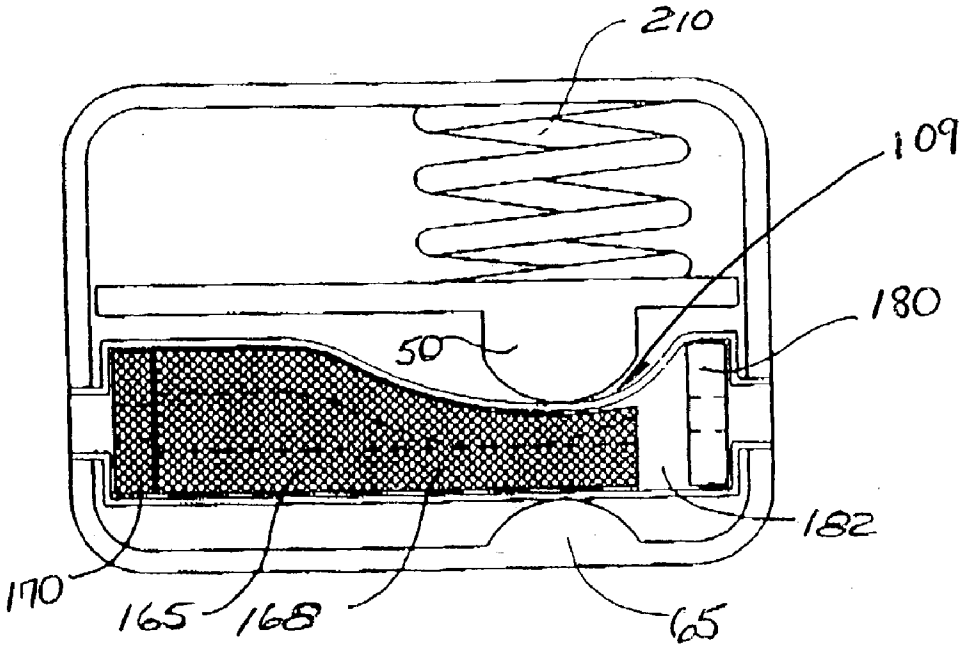
210
109
180
50
182
170
165
168
65

FIG. 29

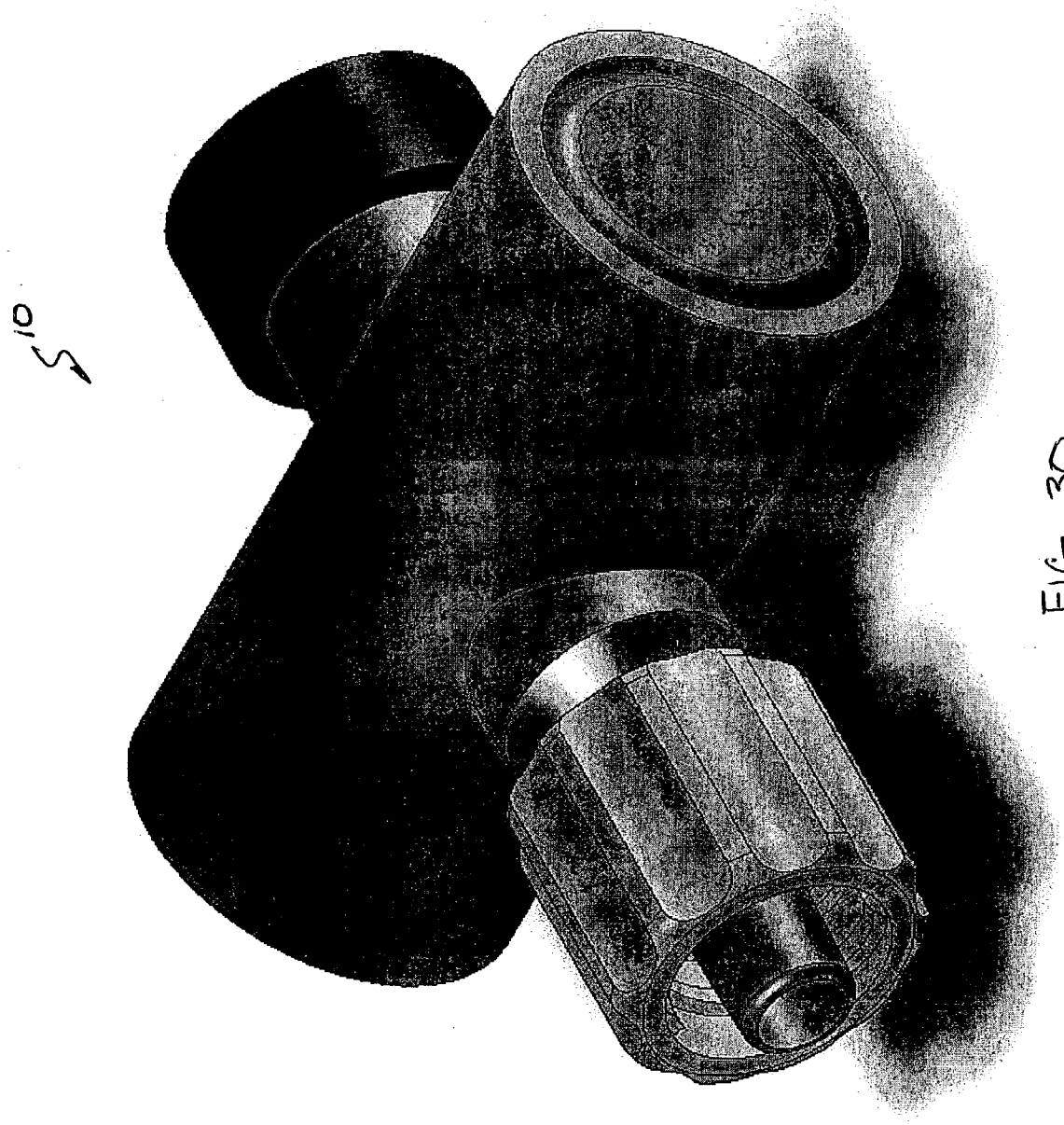

FIG. 30

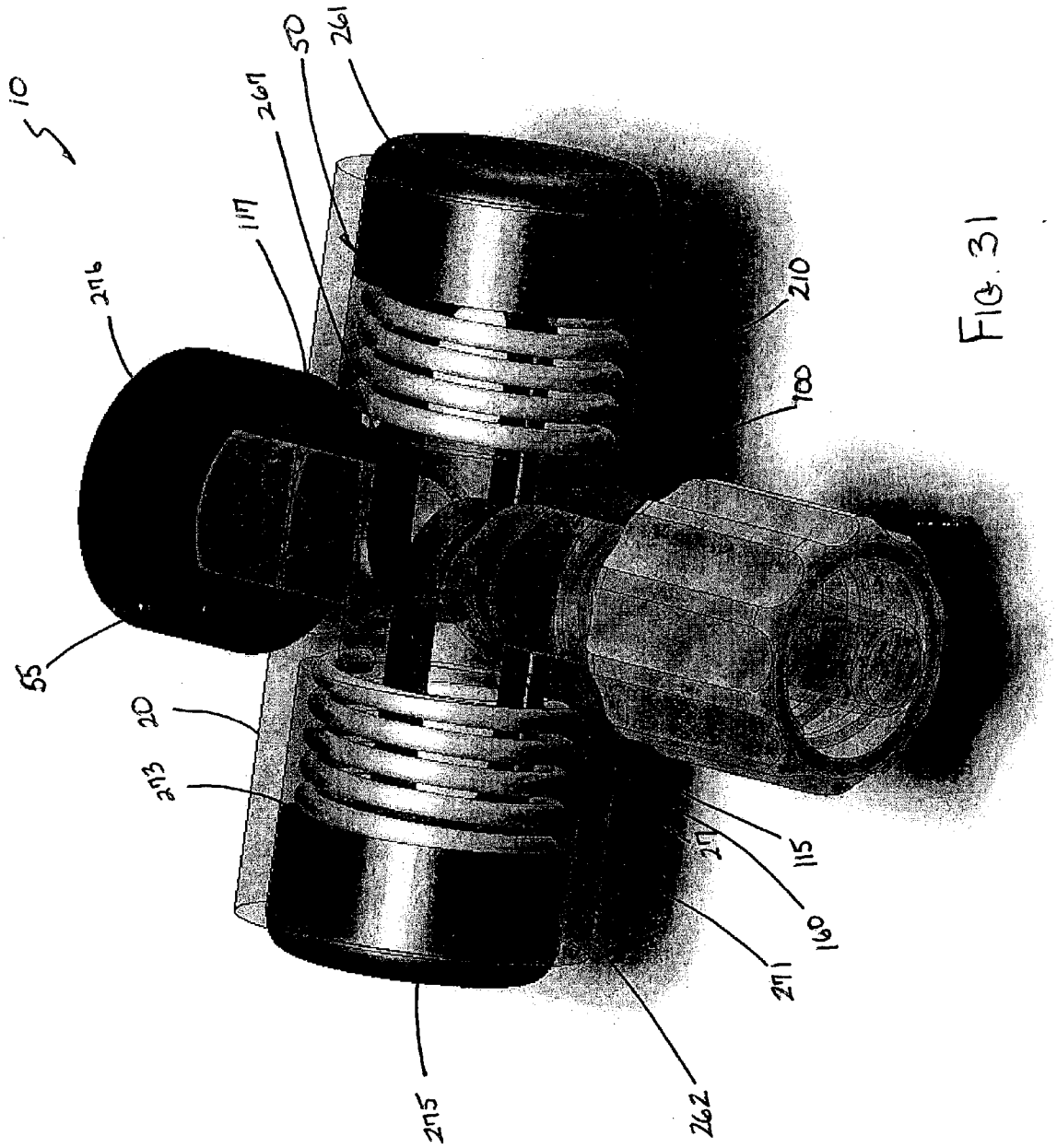

FIG. 31

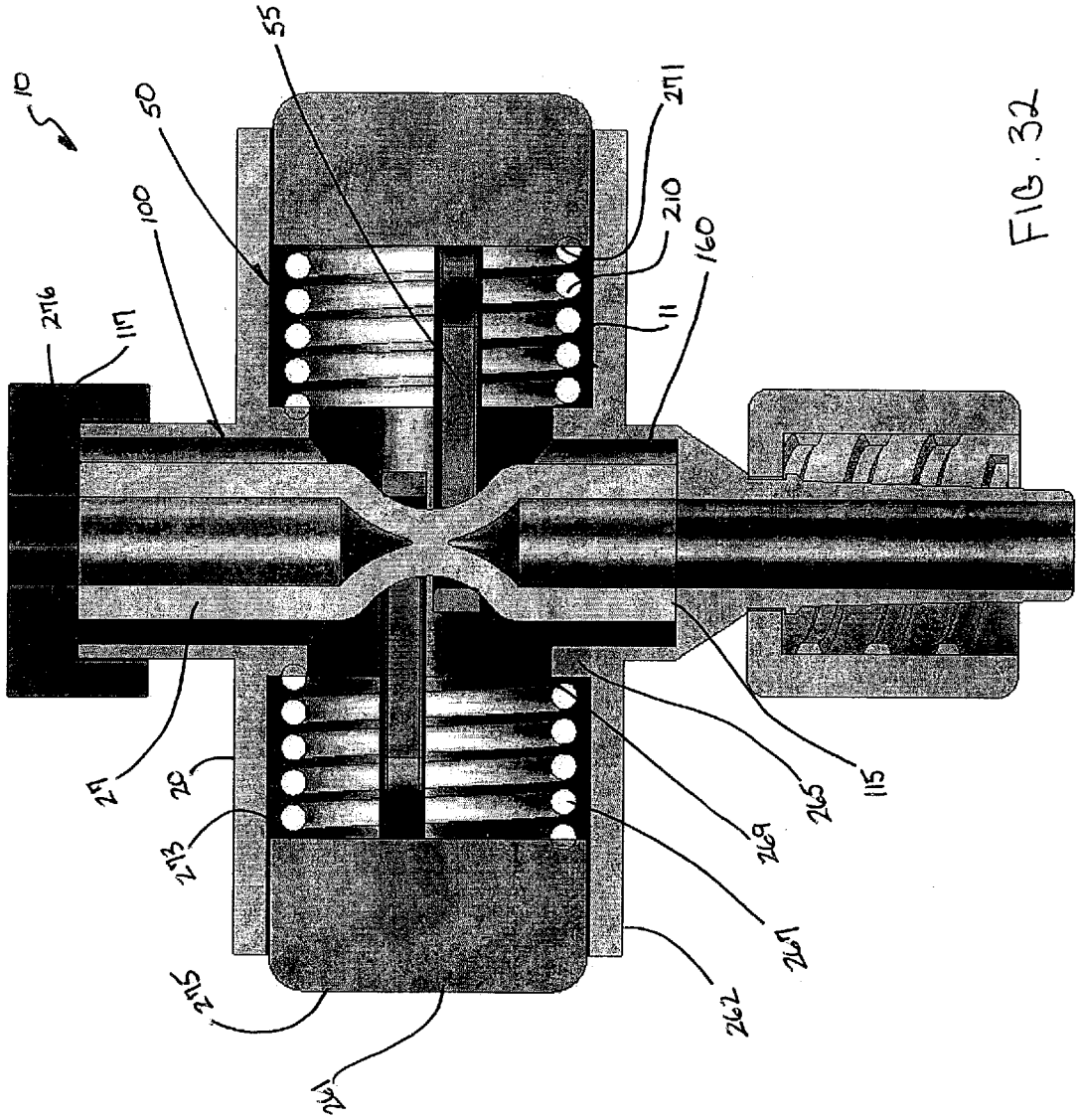
10
55
50
100
276
117
271
210
160
11
27
20
273
275
261
262
267
269
265
115

FIG. 32

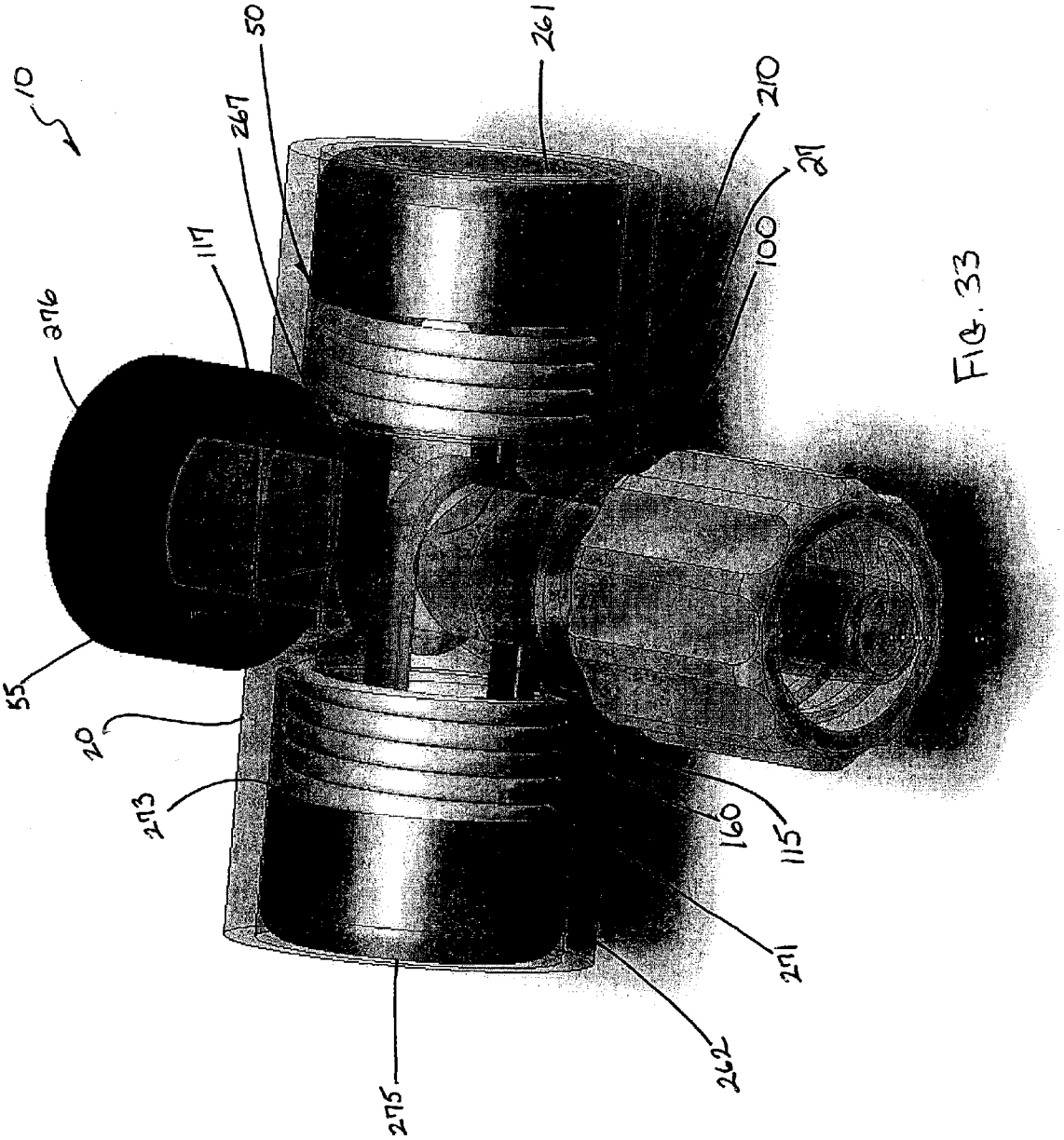

FIG. 33

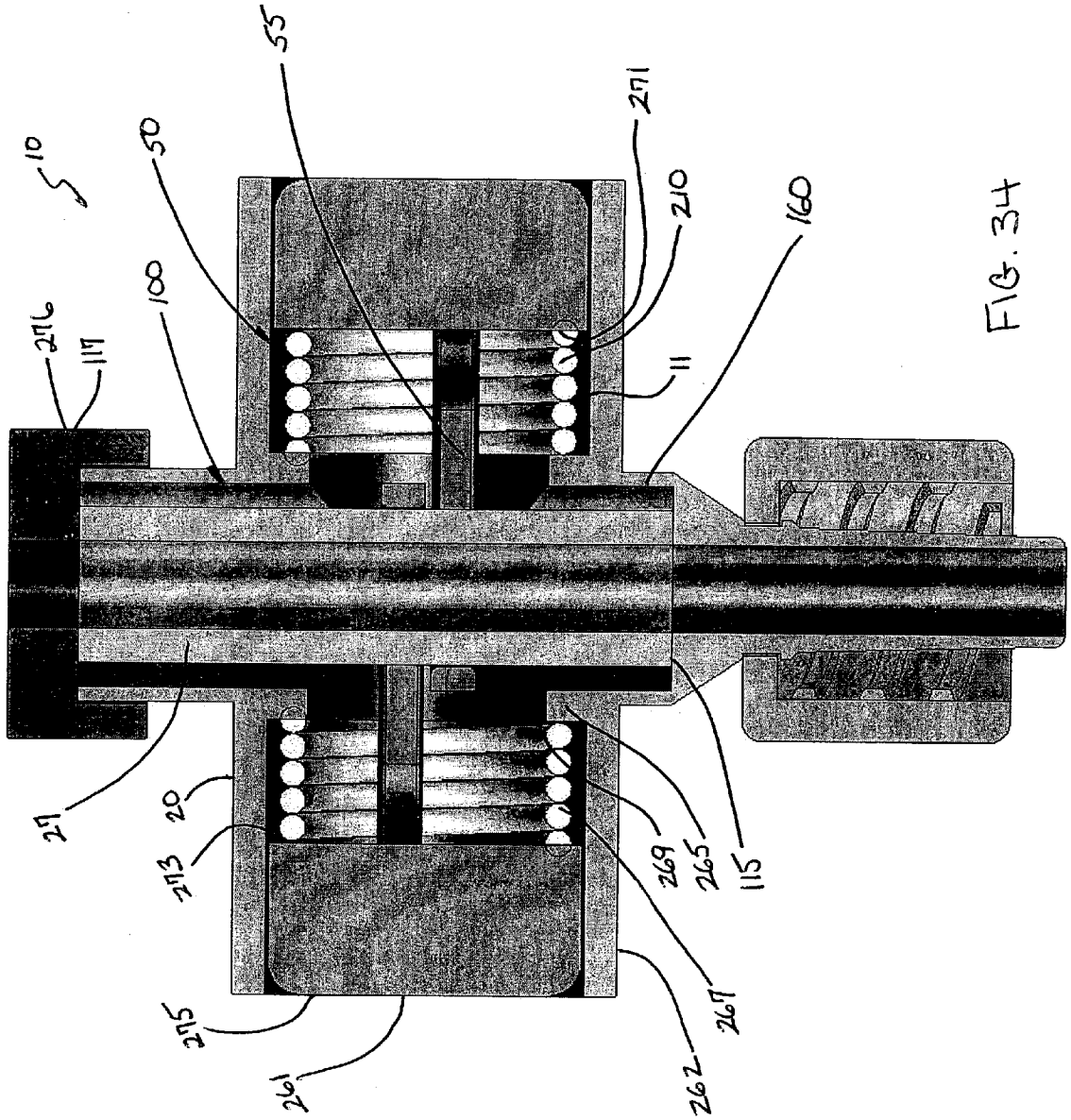
10
50
55
271
210
160
276
117
100
11
27
20
273
269
265
115
275
261
267
262

FIG. 34

COMPOSITE STASIS VALVE

CLAIM OF PRIORITY

[0001] This application claims priority under 35 U.S.C. 119(e) from U.S. Provisional Application Serial No. 60/357,937 filed Feb. 19, 2002, which application is incorporated herein by reference.

TECHNICAL FIELD AND RELATED APPLICATION

[0002] This application relates to catheters, in particular to a composite fluid-stasis valve for use with catheters. This application is related to U.S. Pat. No. 5,429,616, which is incorporated by reference herein.

BACKGROUND

[0003] Fluid stasis mechanisms are commonly used to prevent loss of fluids from the insertion site of a catheter or interventional system. The may range, in complexity, from a simple clamp on a length of tubing to complex valve systems with several moving parts. The most common valves consist of a resilient material in compression within a housing or clamping member. An example of such a valve is patentee's prior U.S. Pat. No. 5,429,616 wherein a length of tubular resilient foam has an occludible lumen.

[0004] An example of the simplest form is U.S. Pat. No. 6,088,889 where a wire clamp is used to occlude a portion of tubing. The resilient material may have a lumen or slit that allows for the passage of an instrument such as a guide wire or catheter.

[0005] Most of the existing devices require the user to manually open or close the valve by adjusting the compression on the resilient material and subsequently opening or closing the lumen. An example of this configuration is commonly referred to as a Touey-Borst valve. The manual operation of existing valves most often requires a twisting motion or a squeezing motion. In many cases the action requires the use of both hands. In addition, the existing valves often do not prevent the immediate backflow from within the fluid path as an instrument is inserted or removed.

[0006] The existing devices do not perform a complete seal against leakage in the presence of a wide range of instruments or in the presence of multiple instruments. For instance, a single valve element with no instrument in place is generally not optimized for sealing in the presence of an instrument. Often a combination of seals is employed to address these issues, for instance: U.S. Pat. Nos. 6,083,207 and 6,024,729 employ primary seal portions in combination with "duckbill-valves" or "0" closure valves.

[0007] Thus, the problems are complex and involve a balance between closing force, opening force, friction, compression and durability. If a valve is inordinately tight, having a closed lumen, it may not allow the insertion of soft, flexible instrumentation such as a "floppy-tip" guidewire, a delicate laser fiber or a soft-tipped catheter. Some catheters, optical fibers and fluid transmission tubes are very delicate and can be damaged by excessive compression or insertion force.

[0008] Accordingly, what is needed is a durable stasis valve that blocks the flow of gas or fluid completely and immediately with or without an instrument in place within the gas/fluid path.

BRIEF DESCRIPTION OF THE DRAWINGS

[0009] **FIG. 1** illustrates a perspective view of a stasis valve as constructed in accordance with one embodiment.

[0010] **FIG. 2** illustrates a perspective view of a stasis valve as constructed in accordance with one embodiment.

[0011] **FIG. 3** illustrates an enlarged cut away view of a stasis valve as constructed in accordance with one embodiment.

[0012] **FIG. 4** illustrates an enlarged cut away view of a stasis valve as constructed in accordance with one embodiment.

[0013] **FIG. 5** illustrates a side cross-sectional view of a seal module as constructed in accordance with one embodiment.

[0014] **FIG. 6** illustrates an end, cross-sectional view of a seal module chamber as constructed in accordance with one embodiment.

[0015] **FIG. 7** illustrates a side cross-sectional view of a seal module as constructed in accordance with one embodiment.

[0016] **FIG. 8** illustrates an end, cross-sectional view of a seal module chamber as constructed in accordance with one embodiment.

[0017] **FIG. 9A** illustrates a schematic diagram of a stasis valve as constructed in accordance with one embodiment.

[0018] **FIG. 9B** illustrates an enlarged schematic diagram of a stasis valve as constructed in accordance with one embodiment.

[0019] **FIG. 10A** illustrates a schematic diagram of a stasis valve as constructed in accordance with one embodiment.

[0020] **FIG. 10B** illustrates an enlarged schematic diagram of a stasis valve as constructed in accordance with one embodiment.

[0021] **FIG. 11** illustrates a partial cut away view of a detent arrangement inside a housing as constructed in accordance with one embodiment.

[0022] **FIG. 12** illustrates a side cross-sectional view of seal module with an instrument as constructed in accordance with one embodiment.

[0023] **FIG. 13** illustrates a side cross-sectional view of seal module as constructed in accordance with one embodiment.

[0024] **FIG. 14** illustrates a side cross-sectional view of seal module as constructed in accordance with one embodiment.

[0025] **FIG. 15** illustrates a side cross-sectional view of seal module as constructed in accordance with one embodiment.

[0026] **FIG. 16** illustrates an end, cross-sectional view of a seal module chamber as constructed in accordance with one embodiment.

[0027] **FIG. 17** illustrates an end, cross-sectional view of a seal module chamber as constructed in accordance with one embodiment.

[0028] **FIG. 18** illustrates an end, cross-sectional view of a seal module chamber as constructed in accordance with one embodiment.

[0029] **FIG. 19** illustrates an end, cross-sectional view of a seal module chamber as constructed in accordance with one embodiment.

[0030] **FIG. 20** illustrates a perspective view of a seal module as constructed in accordance with one embodiment.

[0031] **FIG. 21** illustrates a perspective view of a seal module as constructed in accordance with one embodiment.

[0032] **FIG. 22** illustrates a perspective view of a seal module as constructed in accordance with one embodiment.

[0033] **FIG. 23** illustrates a cross-sectional view of a seal module as constructed in accordance with one embodiment.

[0034] **FIG. 24** illustrates a cross-sectional view of a seal module as constructed in accordance with one embodiment.

[0035] **FIG. 25** illustrates a cross-sectional view of a seal module as constructed in accordance with one embodiment.

[0036] **FIG. 26** illustrates a cross-sectional view of a seal module as constructed in accordance with one embodiment.

[0037] **FIG. 27** illustrates a perspective view of a stasis valve and external mechanism assembly in accordance with one embodiment.

[0038] **FIG. 28** illustrates a sectional view of a seal module in accordance with one embodiment.

[0039] **FIG. 29** illustrates a sectional view of a seal module in accordance with one embodiment.

[0040] **FIG. 30** illustrates a perspective view of a seal valve as constructed in accordance with one embodiment.

[0041] **FIG. 31** illustrates a transparent perspective view of a housing and a seal valve as constructed in accordance with one embodiment.

[0042] **FIG. 32** illustrates a cross-sectional view of a seal valve as constructed in accordance with one embodiment.

[0043] **FIG. 33** illustrates a transparent perspective view of a housing and a seal valve as constructed in accordance with one embodiment.

[0044] **FIG. 34** illustrates a cross-sectional view of a seal valve as constructed in accordance with one embodiment.

DETAILED DESCRIPTION

[0045] In the following detailed description, reference is made to the accompanying drawings which form a part hereof, and in which is shown by way of illustration specific embodiments in which the invention may be practiced. These embodiments are described in sufficient detail to enable those skilled in the art to practice the invention, and it is to be understood that other embodiments may be utilized and that structural changes may be made without departing from the scope of the invention. Therefore, the following detailed description is not to be taken in a limiting sense, and the scope of the invention is defined by the appended claims and their equivalents.

[0046] With reference to the drawings, FIGS. **1-4** illustrate a composite fluid stasis valve **10** with a housing **20**, a proximal end **30**, and a distal end **40**. In one embodiment, the housing **20** comprises a hollow rectangular structure having a first end-wall **21**, a second end-wall **22**, a first side-wall **23**, a second side-wall **24**, a bottom or floor **25**, and a top or lid **26**. A hollow interior wall **11** of the housing **20** is sized and configured to hold and control a composite seal module **100**, a portion of an actuator **50**, and an actuating member **55**.

[0047] The first end-wall **21** of the housing **20** is fitted with a connecting member **35** sized and configured to attach in fluid communication to a fluid delivery supply or a body passage such as a blood vessel. The connecting member **35** is a common male thread "Luer" type fitting or a common "slit-fit" tube connector or the like. The second end-wall **22** of the housing **20** is sized and configured to receive an inserted instrument, catheter or guide wire through a receiving member **45**.

[0048] The actuator **50**, in one option, includes an actuator flange **57** exterior to the interior wall **11** about the second side wall **24** of the housing **20**. In one option, a second stationary member **65** is positioned in the interior wall **11** of the first side wall **23** of the housing **20** distal to the actuating member **55**. In one example, the second stationary member **65** is part of the interior wall **11** of the first side wall **23** of the housing **20** or in another example, the second stationary member **65** is inserted into the bottom **25** of the housing **20** as a separate piece.

[0049] The stasis valve **10** includes the seal module **100** enclosed in the housing **20** such that the seal module **100** is proximally connected to the connecting member **35** and distally connected to the receiving member **45**. The receiving member **45** is, in one option, configured to connect to a fluid or gas delivery system or device such as a syringe, intravenous system or the like. The top edge **18** of the second side wall **24** of the housing **20** forms a guide support for moving the actuating member **55** which, in one option, includes an extension **52**. The top **26** of the housing **20** provides an opposing support member for the moving actuator **50**. As the actuator flange **57** is depressed, the actuator **50** moves across along the top edge **18** of the second side wall **24** toward the interior wall **11** of the first side wall **23** of the housing **20**. The actuating member **55** of the actuator **50** depresses and at least partially collapses, a portion of the seal module **100**. The collapsed portion of the seal module **100** forms a seal **200** preventing fluid and/or gasses communication between the connecting member **35** and the receiving member **45**.

[0050] The actuator **50** is adapted to slide from a first position to a second position. In the first position the actuator **50** is, in one option, disposed and held against a portion of the seal module **100** which depresses and at least partially collapses, for example, the central portion **110** of the containment structure **160** by a compressive force **67** from a resilient member (e.g., by a spring **210**). In one position, the containment structure **160** has a normally closed position (i.e., the lumen remains sealed until a user depresses the actuator **50**). In the second position, the actuator **50** is disposed away from a portion of the seal module **100** by a compressive force **67** (e.g. by depressing the actuator flange **57**) thus allowing, for example, the central portion **110** of the containment structure **160** to retract to an unsealed configuration.

[0051] A seal module **100**, in one option, extends between the first end-wall **21** of the housing **20** and the second

end-wall **22** of the housing **20** and is in fluid communication with the connecting member **35** and the receiving member **45**. The seal module **100** comprises an elongate tubular structure **101** having a central portion **110**, a first end portion **120**, and a second end portion **140**. The central portion **110** is sized and configured to hold a plurality of sealing members including a first seal member **170**, a second seal member **180**, and a third central seal member **165**. It should be noted that one or more of the first seal member **170**, the second seal member **180**, and the third central seal member **165** can be formed of the various materials, and/or having the various properties, discussed throughout this application. In one option, the seal module **100** includes the first seal member **170** fixed at a proximal end **115** of the seal module **100**, a second seal member **180** fixed at a distal end **117** of the seal module **100**, and a third central seal member **165** extending between the first and the second seal members **170**, **180**. The plurality of seal members **165**, **170** and **180** have an internal diameter sized to allow the passage of fluids or gases therethrough.

[**0052**] In one embodiment, the first end portion **120** includes a distal end **121** that axially communicates with the central portion **110** of the containment structure **160** within the hollow interior wall **11** of the housing **20** and axially communicates with the connecting member **35** exterior to the housing **20**. The first end portion **120** includes, in one option, a first diameter substantially smaller than the diameter of the central portion **110**. The second end portion **140**, in one option, includes a distal end **141** that axially communicates with the central portion **110** of the containment structure **160** within the hollow interior wall **11** of the housing **20** and axially communicates with the receiving member **45** exterior to the housing **20**. The second end portion **140** includes a second diameter that is substantially smaller than the diameter of the central portion **110**. An amount of compressive force **67** is applied to the actuator flange **57** of the actuator **50** by the user causing the actuator **50** to slide across along the top edge **18** of the second side wall **24**. As the actuator **50** slides across along the top edge **18** of the second side wall **24**, the actuating member **55** is forced against the outer wall **27** of the seal module **100**.

[**0053**] In another embodiment, the actuator **50** is adapted to slide from a first position to a second position. In the first position the actuator **50** is disposed and held against a portion of the seal module **100** which depresses and at least partially collapses, for example, the central portion **110** of the containment structure **160** by a compressive force **67** (e.g. by a spring **210**) creating a seal **200** preventing gas and/or fluid from passing therethrough. In the second position, the actuator **50** is disposed away from a portion of the seal module **100** by a compressive force **67** (e.g. by depressing the actuator flange **57**) thus allowing, for example, the central portion **110** of the containment structure **160** to retract to an uncollapsed configuration. When there is no longer a compressive force **67** (e.g. by releasing the actuator flange **57**), the actuator **50** reengages the portion of the seal module **100** and at least partially collapses, for example, the central portion **110** of the containment structure **160**.

[**0054**] With reference to FIGS. **5-22**, the seal module **100**, in one embodiment, includes a flexible, elongate tubular structure **101** having an outer wall **27** which includes a material **166** that is highly elastic, deformable, compliant and yet virtually non-compressible. The outer wall **27** is formed so as to have a large diameter in the central portion **110** and a reduced diameter at the first end portion **120** and the second end portion **140** of the seal module **100**. A first abutment **111** and a second abutment **112** are formed by the diameter reduction of the elongate tubular structure **101**. The first abutment **111** forms a stop or seat for a first seal member **170** and the second abutment **112** forms a stop or seat for a second seal member **180**. A third central seal member **165** is placed between the first seal member **170** and the second seal member **180** and in fluid communication therewith. The third central seal member **165** includes a highly deformable, non-compressible material **166** (e.g., plastic). The third central seal member **165** is sized and configured to maintain an open lumen **193** when no compressive force **67** is applied.

[**0055**] When the actuating member **55** is, in one option, forcibly pushed against the central portion of the seal module **100**, the compressive force **67** of the actuating member **55** against the outer wall **27** of the containment structure **160** inwardly depresses or collapses the third central seal member **165** of the containment structure **160** as the actuator **50** progresses toward the first side wall **23** of the housing **20**. The third central seal member **165** is, in one option, depressed to the point where the containment structure **160** of the seal module **100** slows or stops the flow of fluid (e.g., blood) from communicating between the connecting member **35** and the receiving member **45** of the stasis valve **10**. This creates a seal **200** between the orifices **171**, **181** of the lumen **191**, **190**. The stationary member **65** (see **FIG. 4**) further assists the depression of the outer wall **27** of the containment structure **160** on an opposing side as the actuating member **55** progresses toward the first side wall **23** of the housing **20**.

[**0056**] In one embodiment, the first seal member **170** has an orifice **171** of a selected diameter **194** that corresponds, for example, to a range of instruments used within the seal module **100**. The second seal member **180** includes the orifice **181** that corresponds to a range of inserted instruments. The first seal member **170** provides a fluid/gas tight seal around and upon an instrument within a selected range of diameters **194**, such as a catheter, guidewire, needle or fiber, inserted within the orifice **171** of the first seal member **170**. The second seal member **180** is sized and configured to provide containment for the third central seal member **165**. The orifice **181** of the second seal member **180** is, in one option, substantially the same as the orifice **171** of the first seal member **170** and provides a backup or secondary seal in the event that the first seal member **170** becomes damaged.

[**0057**] The first and second seal members **170** and **180** include elastomeric materials, such as rubber or silicone, and are essentially septums sized and configured to seal against gas or fluid pressure around an instrument. The first and second septum seal members **170** and **180**, allow smooth and accurate movement of instruments since there is no additional compressive force or load required to complete the seal. In one option, a relatively high durometer material is used as the septum material for the first and second seal members **170** and **180** because it provides a low frictional coefficient against most inserted instruments while providing a competent seal. In another embodiment, one or more of the first, second, and third seal members **170**, **180**, and **165** includes self-lubricating, lubricious or coated septum materials. Such materials include specialty silicones, natural latex, various synthetic rubbers or elastomeric compounds

of polyurethane, vinyl or the like. The low friction nature of the first and second seal members **170**, **180** is in contrast to the highly deformable and compliant nature of the third central seal member **165**.

[**0058**] The third central seal member **165** includes an elongated tubular structure **101** sized and configured to fit into the tubular containment structure **160** between the first seal member **170** and the second seal member **180**. The lumen **193** of the third central seal member **165** is, in one option, slightly larger than the orifice **171** of the second seal member **180** so that an inserted instrument **260** need not contact the luminal surface.

[**0059**] In one embodiment, the third central seal member **165** includes material **166** that is highly elastic, deformable, compliant and yet virtually non-compressible. Materials **166** include modified vinyl, silicone, polyurethane or a combination thereof. The basic materials are, in one option, modified by compounding them with waxes and/or oils or un-cross-linked modifiers. Such materials are commonly available as "C-Flex" or "Kraton" in the range of 5 to 15 (shore A), as examples. The shore hardness of the material **166** is, in another option, in the range of between 15-20 shore on the "00" scale. This provides a material **166** that is extremely soft and compliant and intrinsically "sticky". An extremely low shore hardness of the third central seal member **165** material **166** allows the third central seal member **165** to be easily compressed upon itself or upon an inserted instrument. For illustrative purposes only, the nature of the material **166** of the third central seal member **165** can be compared to a gelatinous substance. The material **166** exhibits a "selfclosing" nature in that it sticks occlusively to itself forming a nearly fluid/gas tight seal under very light compression.

[**0060**] With particular reference to **FIGS. 10A, 10B, 16-19**, the highly compliant third central seal member **165** seals around a variety of profile shapes **192** and diameters **194** of the lumen **193** when at least one side of compressive force **67** is exerted upon the central region **195** with respect to the central portion **110** of the containment structure **160**. The compressive load may be supplied by a movable, sliding or hinged, actuator **50** that maintains a compressive load upon the third central seal member **165** under the influence of a spring **210** or other resilient material. The spring **210** provides a compressive load between the actuating member **55** of the actuator **50** and the stationary member **65** positioned in the interior wall **11** of the housing **20**.

[**0061**] With reference to **FIGS. 9A, 9B, 10A, 10B, 11**, the compressive load upon the third central seal member **165** is, in one option, selectively relieved by moving the movable actuator **50** so as to compress the spring **210** and subsequently enlarge the distance between the actuating member **55** of the actuator **50** and the stationary member **65** positioned in the interior wall **11** of the housing **20**. A "hold-open" or "hold-closed" feature is, in one option, a latching or detent arrangement **250**. An operator can choose to have the lumen of the composite seal remain substantially open, allowing gas or fluid flow in either direction. The operator can subsequently "squeeze" or otherwise operate the actuator **50** to the following sequential position of the detent arrangement **250** thereby allowing the spring **210** to fully compress the third central seal member **165**. For example, the action of "hold and release" is repeated as the actuator **50** is urged from one extreme position to another extreme position within the detent arrangement **250**. The detent arrangement **250** includes, but is not limited to, a series of ramps and slides that move the sliding actuator **50** through a path.

[**0062**] In another embodiment, the actuator **50** includes an extension configured to be urged up an incline ramp **251** and into a depression **252** where it finds a neutral resting place under the return force of the compression spring **210**. Upon further urging forward, the extension **52** of the actuator **50** is forced against an angular wall **253** that forces the extension of the actuator **50** to one side, over a ledge **255**, and into a return incline ramp **256**. The neutral bias of the actuator **50** is to position the extension so as to move up the first incline ramp **251** upon subsequent or further actuation of the actuator **50**.

[**0063**] FIGS. **12-15** illustrate the use of a seal module **100** that requires no compressive load for use in sealing the stasis valve **10** closed. The non-compressive embodiment may include a second seal member **180** in a fixed position within the containment structure **160** toward the distal end **117** of the containment structure **160**, a first seal member **170** in a sliding relationship within the containment structure **160**, and a third central seal member **165** comprised of a highly deformable material **166**. The first seal member **170** includes an elastomeric seal that is movable within the containment structure **160** in response to a retrograde flow **270**. The first seal member **170** includes a length that maintains axial alignment within the containment structure **160** which, in one option, includes an orifice **181** that is significantly smaller than the lumen **193**, **191** size of the other seal members **165**, **180**. The region adjacent to the small orifice **181** includes a thin cross-section to reduce entry force, friction and restriction. In another option, the seal module **100** includes a first seal member **170** with a first diameter, a second seal member **180** with a second diameter, and a third seal member **165** with a third diameter, the third diameter of the third seal member **165** being greater than at least one of the first diameter and the second diameter.

[**0064**] The seal module **100** includes, in one option, the first seal member **170** having a first material, the second seal member **180** having a second material, and the third seal member **165** having a third material, wherein at least one of the first material of the first seal member **170** and the second material of the second seal member **180** is different than the third material of the third seal member **165**. The first material of the first seal member **170** and the second material of the second seal member **180** can have a lower friction that the third material of the third seal member **165**. The second seal member **180** includes an elastomeric seal that is fixed within the containment structure **160** so that it does not move within the seal module **100**. The second seal member **180** has a length that keeps it axially stable within the containment structure **160** and an orifice **171** that represents the designated lumen **191** size of the instrument **260**.

[**0065**] The back pressure from the retrograde flow **270** forces the first seal member **170** toward the third central seal member **165** in the containment structure **160**. As the first seal member **170** moves distally, or toward the second seal member **180** under the influence of the pressure from the gas or fluid, the third central seal member **165** is compressed.

However, since the material **166** of the third central seal member **165** is essentially non-compressible, the lumen **193** of the third central seal member **165** collapses upon itself circumferencially. The material **166** of the third central seal member **165** is sufficiently soft and compliant to deform under the movement of the first seal member **170**. In one option, at least one of the first and the second materials have a higher durometer than the third material. As long as there is backpressure against the first seal member **170**, a gas or fluid tight seal is maintained.

[**0066**] In one embodiment, instrument **260**, for example, a catheter or guidewire is inserted into the valve antegrade, for example, in the distal end **117** of the containment structure **160** while the lumen **193**, **190**, and **191** of the seal members **165**, **170**, and **180**, are in an open configuration. The instrument **260** frictionally engages the lumen **190** of the first seal member **170** and forces it distally away from the second seal member **180** and the third central seal member **165**. The first seal member **170** forms a seal against the instrument **260**. The back pressure from the retrograde flow **270** against the first seal member **170** forces the first seal member **170** toward the distal end **117** of the containment structure **160** compressing the third central seal member **165** and collapsing it circumferencially against the instrument **260** forming a second, complete seal.

[**0067**] In another embodiment, instrument **260**, for example, a catheter or guidewire is inserted into the valve antegrade, for example, in the distal end **117** of the containment structure **160** while the lumen **193** of the third central seal member **165** is in a closed configuration. The instrument **260** frictionally engages the lumen **190** of the first seal member **170** and forces it distally away from the second seal member **180** and the closed third central seal member **165**. The first seal member **170** forms a seal against the instrument **260**. The back pressure from the retrograde flow **270** against the first seal member **170** forces the first seal member **170** toward the distal end **117** of the containment structure **160** compressing the third central seal member **165** and collapsing it circumferencially against the instrument **260** forming a second, complete seal.

[**0068**] In yet another embodiment, two or more instruments **260** are inserted into the valve antegrade, for example, in the distal end **117** of the containment structure **160** while the lumen **193**, **190**, and **191** of the seal members **165**, **170**, and **180**, are in an open configuration, or in another option, while the lumen **193** of the third central seal member **165** in a closed configuration. The instruments **260** frictionally engage the lumen **190** of the first seal member **170** and forces it distally away from the second seal member **180** and the third central seal member **165**. The first seal member **170** forms a seal against the instruments **260**. The back pressure from the retrograde flow **270** against the first seal member **170** forces the first seal member **170** toward the distal end **117** of the containment structure **160** compressing the third central seal member **165** and collapsing it circumferencially against the instruments **260** forming a second, complete seal. The material **166** of the third central seal member **165** is so compliant that it forms a seal around the instruments **260** even if the instruments **260** are irregularly shaped.

[**0069**] An pressure from the antegrade flow **272** repositions the first seal member **170** toward the proximal end **115** of the containment structure **160** and subsequently opens the stasis valve **10** while preventing back-flow or leakage. While this arrangement may not be as friction-less as the other embodiments using an actuator **50**, it may offer the advantages of "hands-free" operation.

[**0070**] With reference to FIGS. **23-29**, the stasis valve **10** includes the seal module **100** enclosed in the housing **20** where, in one option, the seal module **100** includes the first seal member **170** at the proximal end **115** of the containment structure **160**, a second seal member **180** at the distal end **117** of the containment structure **160**, and a third central seal member **165** extending between the first and the second seal members **170**, **180**. The plurality of seal members **165**, **170** and **180** have an internal diameter sized to allow the passage of fluids or gases. A support member **168** includes a woven or braided material **166** configured to fit over the first seal member **170** and over the third central seal member **165**. The support member **168** is capable of retractionably collapsing with a compressive side-load by opposing protrusions, for example, the actuating member **55** and the stationary member **65**. In one option, the support member **168** is compressible under a side-load but not elongatable. In one example, this is accomplished by a biased weaving or tubular braiding of rigid material. An example of such a construction is the shielding found on certain electronic wire components. A tubular braided or woven rigid material exhibits the characteristics of an elasometric material and yet is not, itself, elastic.

[**0071**] The actuator **50** is adapted to move from a first position to a second position. In the first position the actuator is, in one option, disposed and held against a portion of the seal module **100** depressing or collapsing, for example, an off-center portion **109** of the containment structure **160** by a compressive force **67** (e.g. by a spring **210**). In the second position, the actuator **50** is disposed away from a portion of the seal module by a compressive force **67** (e.g. by depressing the actuator flange **57**) thus allowing, for example, the off-center portion **109** of the containment structure **160** to retract to an uncollapsed configuration.

[**0072**] In the first position, the actuator **50** is, in another option, disposed and held against a portion of the seal module **100** which depresses and at least partially collapses, for example, the central portion **110** of the containment structure **160** by a compressive force **67** (e.g. by a spring **210**). In the second position, the actuator **50** is disposed away from a portion of the seal module **100** by a compressive force **67** (e.g. by depressing the actuator flange **57**) thus allowing, for example, the central portion **110** of the containment structure **160** to retract to an uncollapsed configuration.

[**0073**] In one embodiment, the first seal member **170** is fixed in a position at the proximal end **115** of the central portion **110** of the seal module **100**. The first abutment **111** forms a stop or seat for a first seal member **170**. The braided or woven support member **168** is connected to the first seal member **170** and attached to or formed into the wall of the third central seal member **165**. The third central seal member **165** is thus not permitted to migrate under a backpressure load into the distal orifice **181** of the second seal member **180** and occlude said orifice **171**. In one example, a compressive side-load is applied to the third central seal member **165**. In another example, a compressive side-load is applied by opposing protrusions, for example, actuator **50** and

stationary member **65**, under a spring **210** load. Under this influence, the material **166** of the third central seal member **165** is not allowed to extrude longitudinally to an area **182** due to the linear limit of the braided or woven support member **168**.

[**0074**] Now referring to **FIG. 27**, the seal module **100** is, in one option, used without the housing **20** or the containment structure **160**. The seal module **100** includes an elongate tubular structure **101** having a central portion **110** with a proximal end **30** and a distal end **40**. In one option, a compressive or occlusive side load or "squeezing" is supplied by a separate tool or device, such as a clamp **300**, forceps, hemostat or a combination thereof, or additionally occluded by bending or finger pressure. The third central seal **165** is, in one option, closed off from the central lumen **193** of the seal module **100** in the instance where a plurality of instruments **260** are within said lumen **193**. The highly occlusive nature of the material **166** of the third central seal member **165** allows it to conform to the interstices adjacent to the instruments. For instance, a guidewire and catheter may be placed into the same lumen **193** for extension into a body passage rather than have two or more separate insertion sites into the same vessel or passage.

[**0075**] FIGS. **30-34** illustrate one embodiment of the stasis valve **10** including a seal module **100** having a lumen sized to allow the passage of fluids or gases. The seal module **100** includes a containment structure **160** with a proximal end **115** and a distal end **117**. The seal module **100** is formed of one or more seal members, as discussed above. In another option, the seal module **100** and/or any of its respective seal members can be formed of one or more materials, including their relative properties, as discussed above.

[**0076**] In one option, two circular actuators **50** are at least partially circumferencially disposed about a portion of the seal module **100** movable from a first position to a second position on opposing sides of the housing **20**. The actuators **50** each include an actuating member **55** which, in one option, is U-shaped. The outer wall **262** of the housing **20** and the inner flange wall **265** of the housing **20** provides opposing support for two resilient members **267** (e.g. spring **210**) disposed within the actuating member **55**. The resilient members **267** include a proximal end **269** and a distal end **271** where the proximal end **269** of the resilient members **267** abut the inner flange wall **265** of the housing **20** and the distal end **271** of the resilient members **267** each abut the proximal end **273** of an actuator button **261**. In one option, the actuators **50** are configured cylindrically to slide along the cylindrical interior wall **11** of the housing **20** from a first position to a second position.

[**0077**] In the first position the actuating members **55** of the actuators **50** are, in one option, disposed and at least partially circumferencially disposed about the portion **108** of the seal module **100** depressing and at least partially collapsing a portion **108** of the containment structure **160** by a compressive force **67** (e.g. by a spring **210**). The lumen **193** of the third seal member **165** is at least partially collapsed by the compressive force **67**. In the second position, the actuators **50** are disposed away from the portion **108** of the seal module **100** by a compressive force **67** (e.g. by depressing the distal end **275** of the actuator button **261**). As each actuator button **261** is depressed, each actuator **50** slides along the cylindrical interior wall **11** of the housing **20**. The proximal end **273** of each actuator button **261** compresses the distal end **271** of each resilient member **267** which in turn, the proximal end **269** of each resilient member **267** compresses against the inner flange wall **265** of the housing **20**. Such movement allows each engaged actuating member **55** to forcibly disengage opposing outer walls **27** of the seal module **100** allowing the portion **108** of the containment structure **160** to retract to an uncollapsed configuration where gases and fluids can pass therethrough. As the actuator **50** is disposed away from the portion **108** of the seal module **100**, the lumen **193** of the third seal member **165** is able to retract in an unsealed configuration.

[**0078**] In another embodiment, the stasis valve **10** includes a containment structure **160** with a proximal end **115** and a distal end **117** with only one actuators **50** disposed against a portion of the seal module **100** movable from a first position to a second position. The actuator **50** includes an actuating member **55** which, in one option, is U-shaped. The outer wall **262** of the housing **20** and the inner flange wall **265** of the housing **20** provide an opposing support for the resilient member **267** (e.g. spring **210**) disposed within the actuating member **55**. The resilient member **267** includes a proximal end **269** and a distal end **271** where the proximal end **269** of the resilient member **267** abuts the inner flange wall **265** of the housing **20** and the distal end **271** of the resilient member **267** is disposed against the proximal end **273** of an actuator button **261**.

[**0079**] In one option, the actuator **50** is configured cylindrically to slide along the cylindrical interior wall **11** of the housing **20** from a first position to a second position. In the first position the actuating member **55** of the actuator **50** is, in one option, disposed and held against the portion **108** of the seal module **100** depressing and at least partially collapsing a portion **108** of the containment structure **160** by a compressive force **67** (e.g. by a spring **210**). In the second position, the actuator **50** is disposed away from the portion **108** of the seal module **100** by a compressive force **67** (e.g. by depressing the distal end **275** of the actuator button **261**).

[**0080**] As the actuator button **261** is depressed, the actuator **50** slides along the cylindrical interior wall **11** of the housing **20**. The proximal end **273** of the actuator button **261** compresses the distal end **271** of the resilient member **267** which in turn, the proximal end **269** of the resilient member **267** compresses against the inner flange wall **265** of the housing **20**. Such movement allows the engaged actuating member **55** to forcibly disengage the outer wall **27** of the seal module **100** allowing the portion **108** of the containment structure **160** to retract to an uncollapsed configuration where gases and fluids can pass therethrough.

[**0081**] The actuating member **55** and/or the actuating button **261** in one option includes aluminum. In another option, the actuating member **55** and the actuating button **261** include plastic. The housing **20**, in one option, is made of ABS plastic. In one option, the third central seal member **165** includes material **166** that is highly elastic, deformable, compliant and yet virtually non-compressible. Materials **166** include modified vinyl, silicone, polyurethane or a combination thereof. The basic materials are, in one option, modified by compounding them with waxes and/or oils or un-cross-linked modifiers. Such materials are commonly available as "C-Flex" or "Kraton" in the range of 5 to 15

(shore A), as examples. The shore hardness of the material **166** is, in another option, in the range of between 15-20 shore on the "00" scale.

[**0082**] The stasis valve **10**, in one option, is made from machining pre-existing amounts of metals and/or plastics. For example, The actuating member **55** and the actuating button **261** is machined from aluminum. In another example, the actuating member **55** and the actuating button **261** are machined from plastic where the housing **20**, in one option, is machined from ABS plastic. In another example, the housing **20**, actuator button **261**, the connecting member **35** and a cap **276** are injection molded utilizing the various material outlined above.

[**0083**] In an example where the stasis valve **10** includes two actuators **50**, the stasis valve **10** is assembled by inserting the actuator button **261** and resilient member **267** (e.g., spring **210**) into one side of the housing **20**. The actuator button **261** and resilient member **267** (e.g., spring **210**) are inserted into an opposing side of the housing **20**. Each actuator button **261** is completely compressed and held while the seal module **100** is inserted through the housing **20** and between each actuator **50**. Each actuator button is released and the cap **276** secured to the housing **20**, for example, with an adhesive. Further, the connecting member **35** is snapped onto the housing. The materials used and the assembly thereof of the stasis valve **10** as described herein can include any of the earlier disclosed embodiments or a combination thereof.

[**0084**] It is to be understood that the above description is intended to be illustrative, and not restrictive. Many other embodiments will be apparent to those of skill in the art upon reading and understanding the above description. It should be noted that embodiments or portions thereof discussed in different portions of the description or referred to in different drawings can be combined to form additional embodiments of the invention. The scope of the invention should, therefore, be determined with reference to the appended claims, along with the full scope of equivalents to which such claims are entitled.

We claim:

1. A valve comprising:

a seal module having a lumen sized to allow the passage of fluids or gases, the seal module having a proximal end and a distal end;

a resilient member disposed against an actuator; and

the actuator disposed against a portion of the seal module, the actuator movable from a first position to a second position, in the first position the actuator is disposed against the portion of the seal module collapsing the lumen between the proximal end and the distal end of the seal module creating a seal, in the second position the actuator is disposed away from the portion of the seal module by a force allowing the lumen to return to an unsealed configuration.

2. The valve as recited in claim 1, wherein the actuator is disposed away from the portion of the seal module by a compressive force.

3. The valve as recited in claim 1, wherein the seal module is enclosed in a housing.

4. The valve as recited in claim 1, wherein the resilient member is a spring.

5. The valve as recited in claim 1, further comprising at least one detent, the detent retaining a lumen of the seal module in at least one of a closed position or an open position.

6. The valve as recited in claim 1, wherein the actuator includes an extension configured to slidably engage into a first incline ramp extending from an interior wall of a housing and an angular wall with a depression having a ledge extending therebetween, where the extension of the actuator is further configured to engage over the ledge of the depression and into a second incline ramp.

7. The valve as recited in claim 1, wherein the seal module is collapsible by the actuator and by an opposing protrusion.

8. The valve as recited in claim 1, wherein the actuator includes an actuating member having a U-shaped configuration.

9. The valve as recited in claim 1, having two actuators disposed on opposing sides of a housing.

10. A valve comprising:

a seal module having a plurality of seal members including a first seal member, a second seal member, and a third seal member extending between the first and the second seal members, the plurality of seal members each having a lumen sized to allow the passage of fluids or gases; and

the first seal member having a first material, the second seal member having a second material, and the third seal member having a third material, wherein at least one of the first material of the first seal member and the second material of the second seal member is different than the third material of the third seal member.

11. The valve as recited in claim 10, wherein the first seal member is disposed in a sliding relationship with a proximal end of the seal module, the second seal member is disposed against a distal end of the seal module, and the third seal member extends between the first and the second seal members, the third seal member collapsible under pressure from the first seal member.

12. The seal module as recited in claim 10, wherein at least one of the first and the second materials have a higher durometer than the third material.

13. The seal module as recited in claim 10, wherein the first seal member has a first diameter, the second seal member has a second diameter, and the third seal member has a third diameter, the third diameter of the third seal member is greater than at least one of the first diameter and the second diameter.

14. The seal module as recited in claim 10, wherein at least one of the first material of the first seal member and the second material of the second seal member has a lower friction than the third material of the third seal member.

15. The valve as recited in claim 10, further comprising a support member fitted over the first and the third seal members.

16. The valve as recited in claim 15, wherein the support member includes a woven material, a braided material, or a combination thereof.

17. A valve comprising:

a seal module having a lumen sized to allow the passage of fluids or gases, the seal module having a proximal end and a distal end;

one or more resilient members disposed against one or more actuators; and

the one or more actuators disposed against a portion of the seal module, the one or more actuators movable from a first position to a second position, in the first position the one or more actuators are at least partially circumferencially disposed about the portion of the seal module collapsing the lumen between the proximal end and the distal end of the seal module creating a seal, in the second position the one or more actuators are circumferencially disposed away from the portion of the seal module allowing the lumen to return to an unsealed configuration.

18. The valve as recited in claim 17, wherein the one or more actuators each include an actuating member having a U-shaped configuration.

19. The valve as recited in claim 17, wherein the one or more resilient members is a spring.

20. The valve as recited in claim 17, wherein the one or more actuators are disposed on opposing sides of a housing.

21. The valve as recited in claim 17, wherein each of the one or more actuators is disposed away from the portion of the seal module by a compressive force.

22. A method comprising:

providing a seal module having a plurality of seal members including a first seal member with a first lumen in a sliding relationship with a proximal end of the seal module;

disposing a second seal member with a second lumen against a distal end of the seal module;

disposing a third deformable seal member with a third lumen between the first and the second seal members, the plurality of seal members sized to allow the passage of fluids or gases;

urging the first seal member toward the second seal member where the deformable third seal member is compressed; and

collapsing the third seal member creating a seal of at least a portion of the third lumen of the third seal member.

23. The method as recited in claim 22, wherein sealing the module includes sliding the first seal member disposed against a proximal end of the seal module toward the second seal member disposed against the distal end of the seal module and collapsing the third seal member extending between the first and the second seal members.

24. The method as recited in claim 22, further comprising disposing an instrument through a first diameter of the first seal member, a second diameter of the second seal member, and a third diameter of the third seal member sealing at least the first seal member to the instrument.

25. The method as recited in claim 22, including moving an actuator along an incline ramp of an interior wall of a housing and into a depression, disposing the actuator under the force of a compression spring, urging the actuator against an angular wall, pushing the actuator to one side over a ledge, and disposing the actuator into a return incline ramp.

26. A method comprising:

forming a seal module having a lumen sized to allow the passage of fluids or gases;

disposing an actuator against a portion of the seal module with a resilient material, the actuator movable from a first position to a second position;

collapsing the lumen between a proximal end and a distal end of the seal module creating a seal; and

moving the actuator away from the portion of the seal module in the second position allowing the lumen to return to an unsealed configuration.

27. The method as recited in claim 26, wherein moving the actuator away from the portion of the seal module includes moving the actuator by a compressive force.

28. The method as recited in claim 26, wherein collapsing the seal module includes depressing the seal module with the actuator and an opposing protrusion.

29. The method as recited in claim 26, wherein collapsing the seal module includes depressing the seal module with two opposing actuators.

30. The method as recited in claim 26, further comprising moving at least one detent, and retaining the lumen of the seal module in at least one of a closed position or an open position.

31. The method as recited in claim 26, including moving an extension of the actuator along an incline ramp of an interior wall of a housing and into a depression, disposing the extension under the force of a compression spring, urging the extension against an angular wall, pushing the extension to one side over a ledge, and disposing the extension into a return incline ramp.

* * * * *