US007998104B2

(12) **United States Patent**
Chang

(10) **Patent No.: US 7,998,104 B2**
(45) **Date of Patent: Aug. 16, 2011**

(54) **METHOD AND APPARATUS FOR TREATING A CAROTID ARTERY**

(75) Inventor: **David W. Chang**, Cupertino, CA (US)

(73) Assignee: **Silk Road Medical, Inc.**, Palo Alto, CA (US)

(*) Notice: Subject to any disclaimer, the term of this patent is extended or adjusted under 35 U.S.C. 154(b) by 606 days.

(21) Appl. No.: **10/996,301**

(22) Filed: **Nov. 22, 2004**

(65) **Prior Publication Data**

US 2005/0154344 A1 Jul. 14, 2005

Related U.S. Application Data

(60) Provisional application No. 60/524,069, filed on Nov. 21, 2003, provisional application No. 60/569,843, filed on May 10, 2004, provisional application No. 60/587,067, filed on Jul. 12, 2004.

(51) **Int. Cl.**
A61M 29/00 (2006.01)

(52) **U.S. Cl.** **604/9**; 604/8; 604/96.01; 604/317

(58) **Field of Classification Search** 604/8–10, 604/317–319; 606/200; 623/1.11, 1.12, 623/1.15, 1.16
See application file for complete search history.

(56) **References Cited**

U.S. PATENT DOCUMENTS

4,301,803	A *	11/1981	Handa et al.	600/435
4,771,777	A	9/1988	Horzewski et al.	
4,840,690	A	6/1989	Melinyshyn et al.	
4,865,581	A	9/1989	Lundquist	
4,921,478	A	5/1990	Solano	
4,921,479	A	5/1990	Grayzel	
5,135,484	A	8/1992	Wright	
5,250,060	A	10/1993	Carbo et al.	
5,328,470	A	7/1994	Nabel et al.	
5,328,471	A	7/1994	Slepian	
5,380,284	A	1/1995	Michael	
5,429,605	A	7/1995	Bernd	
5,769,821	A	6/1998	Abrahamson et al.	
5,833,650	A	11/1998	Imran	
5,876,367	A	3/1999	Kaganov et al.	
5,895,399	A	4/1999	Barbut et al.	
5,910,154	A	6/1999	Tsugita et al.	
6,090,072	A	7/2000	Kratoska et al.	

(Continued)

FOREIGN PATENT DOCUMENTS

EP 0 427 429 5/1991

(Continued)

OTHER PUBLICATIONS

Bergeron et al. (1999). "Percutaneous stenting of the internal carotid artery: the European Cast I Study" J. Endovasc. Surg. 6:15-159.

(Continued)

Primary Examiner — Melanie J Hand
(74) *Attorney, Agent, or Firm* — Fred C. Hernandez; Mintz, Levin, Cohn, Ferris, Glovsky and Popeo, P.C.

(57) **ABSTRACT**

One disclosed embodiment comprises a method for treating lesions in the carotid artery of a mammalian body. The method comprises transcervical access and blocking of blood flow through the common carotid artery (with or without blocking of blood flow through the external carotid artery), shunting blood from the internal carotid artery and treating the lesion in the carotid artery.

25 Claims, 5 Drawing Sheets

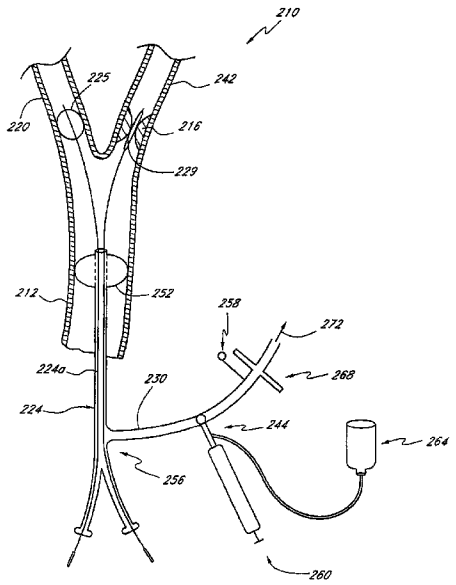

Imperative Care v. Inari Medical
US Patent 12,016,580
Imperative Care Ex. 1035

U.S. PATENT DOCUMENTS

6,146,370	A	11/2000	Barbut	
6,161,547	A	12/2000	Barbut	
6,165,199	A	12/2000	Barbut	
6,206,868	B1	3/2001	Parodi	
6,258,115	B1	7/2001	Dubrul	
6,270,477	B1	8/2001	Bagaoisan et al.	
6,295,989	B1	10/2001	Connors, III	
6,306,163	B1	10/2001	Fitz	
6,312,444	B1	11/2001	Barbut	
6,364,900	B1	4/2002	Heuser	
6,383,172	B1	5/2002	Barbut	
6,413,235	B1 *	7/2002	Parodi	604/104
6,423,032	B2	7/2002	Parodi	
6,423,086	B1	7/2002	Barbut et al.	
6,454,741	B1	9/2002	Muni et al.	
6,464,664	B1	10/2002	Jonkman et al.	
6,471,672	B1	10/2002	Brown et al.	
6,482,172	B1	11/2002	Thramann	
6,533,800	B1	3/2003	Barbut	
6,540,712	B1	4/2003	Parodi et al.	
6,551,268	B1	4/2003	Kaganov et al.	
6,555,057	B1	4/2003	Barbut et al.	
6,558,356	B2	5/2003	Barbut	
6,582,396	B1	6/2003	Parodi	
6,582,448	B1 *	6/2003	Boyle et al.	606/200
6,595,953	B1	7/2003	Coppi et al.	
6,595,980	B1	7/2003	Barbut	
6,605,074	B2	8/2003	Zadno-Azizi et al.	
6,623,471	B1	9/2003	Barbut	
6,626,886	B1	9/2003	Barbut	
6,632,236	B2	10/2003	Hogendijk	
6,638,245	B2	10/2003	Miller et al.	
6,645,222	B1	11/2003	Parodi et al.	
6,652,480	B1	11/2003	Imran et al.	
6,663,652	B2	12/2003	Daniel et al.	
6,669,721	B1	12/2003	Bose et al.	
6,682,505	B2	1/2004	Bates et al.	
6,695,861	B1	2/2004	Rosenberg et al.	
6,702,782	B2	3/2004	Miller et al.	
6,711,436	B1	3/2004	Duhaylongsod	
6,736,790	B2	5/2004	Barbut et al.	
6,755,847	B2	6/2004	Eskuri	
6,830,579	B2	12/2004	Barbut	
6,837,881	B1	1/2005	Barbut	
6,840,949	B2	1/2005	Barbut	
6,855,136	B2	2/2005	Dorros et al.	
6,875,231	B2	4/2005	Anduiza et al.	
6,878,140	B2	4/2005	Barbut	
6,887,227	B1	5/2005	Barbut	
6,902,540	B2	6/2005	Dorros et al.	
6,905,490	B2	6/2005	Parodi	
6,908,474	B2	6/2005	Hogenkijk	
6,929,634	B2	8/2005	Dorros et al.	
6,936,060	B2	8/2005	Hogendijk et al.	
6,958,059	B2	10/2005	Zadno	
6,979,346	B1	12/2005	Hossainy et al.	
7,004,924	B1	2/2006	Brugger et al.	
7,004,931	B2	2/2006	Hogendijk	
7,029,488	B2	4/2006	Schonholz et al.	
7,033,344	B2	4/2006	Imran	
7,048,758	B2	5/2006	Boyle et al.	
7,063,714	B2	6/2006	Dorros et al.	
7,083,594	B2	8/2006	Coppi	
7,108,677	B2	9/2006	Courtney et al.	
7,232,452	B2	6/2007	Adams et al.	
7,232,453	B2	6/2007	Shimon	
7,367,982	B2	5/2008	Nash et al.	
7,374,560	B2	5/2008	Resseman et al.	
7,374,561	B2	5/2008	Barbut	
7,422,579	B2	9/2008	Wahr et al.	
7,458,980	B2	12/2008	Barbut	
2001/0044598	A1	11/2001	Parodi	
2001/0044634	A1 *	11/2001	Michael et al.	606/200
2001/0049517	A1	12/2001	Zadno-Azizi	
2002/0052620	A1	5/2002	Barbut	
2002/0052640	A1	5/2002	Bigus	
2002/0068899	A1	6/2002	McGuckin et al.	
2002/0087119	A1 *	7/2002	Parodi	604/103.07
2002/0128679	A1	9/2002	Turovskiy et al.	
2002/0165598	A1	11/2002	Wahr et al.	
2002/0173815	A1	11/2002	Hogenkijk et al.	
2003/0040762	A1	2/2003	Dorros et al.	
2003/0050600	A1	3/2003	Rossemann et al.	
2003/0065356	A1	4/2003	Tsugita et al.	
2003/0069468	A1	4/2003	Bolling	
2003/0186203	A1 *	10/2003	Aboud	434/262
2003/0212304	A1	11/2003	Lattouf	
2004/0116946	A1	6/2004	Goldsteen et al.	
2004/0127913	A1	7/2004	Voss et al.	
2004/0249234	A1	12/2004	Manowitz et al.	
2005/0096726	A1	5/2005	Sequin	
2005/0124973	A1	6/2005	Dorros	
2005/0131453	A1	6/2005	Parodi	
2005/0154344	A1	7/2005	Chang	
2005/0154349	A1	7/2005	Renz	
2005/0228402	A1	10/2005	Hofmann	
2005/0228432	A1	10/2005	Hogendijk	
2005/0267323	A1	12/2005	Dorros	
2005/0273051	A1	12/2005	Coppi	
2006/0149350	A1	7/2006	Patel et al.	
2006/0167437	A1	7/2006	Valencia	
2006/0200191	A1	9/2006	Zadno-Azizi	
2007/0198049	A1	8/2007	Barbut	
2007/0249997	A1	10/2007	Goodson et al.	
2009/0024072	A1	1/2009	Criado et al.	

FOREIGN PATENT DOCUMENTS

EP	1649829		4/2006
WO	95/05209		2/1995
WO	98/38930		11/1998
WO	99/45835	A2	9/1999
WO	99/65420		12/1999
WO	00/32266	A1	8/2000
WO	02/32495		4/2002
WO	WO 0232495	A1 *	4/2002
WO	03/090831		11/2003
WO	2004/006803	A1	1/2004
WO	2005/051206		6/2005
WO	2007/136946		11/2007
WO	2009/012473		1/2009
WO	2009/099764		8/2009
WO	2009/100210		8/2009
WO	2010/019719		2/2010

OTHER PUBLICATIONS

Bergeron P. et al. (1996) "Recurrent Carotid Disease: Will Stents be an alternative to surgery?" J Endovasc Surg; 3: 76-79.

Criado et al. (1997) "Evolving indications for and early results of carotid artery stenting" Am. J. Surg.; 174:111-114.

Diethrich et al., (1996). "Percutaneous techniques for endoluminal carotid interventions" J. Endovasc. Surg. 3:182-202.

Henry et al. (1999) "Carotid stenting with cerebral protection: First clinical experience using the PercuSurge GuardWire System" *J. Endovasc. Surg.* 6:321-331.

Adami, M.D., et al., (2002) "Use of the Parodi Anti-Embolism System in Carotid Stenting: Italian Trial Results" J Endovasc Ther 9:147-154.

Bates, M.D., et al. (2004) "Internal Carotid Artery Flow Arrest/Reversal Cerebral Protection Techniques" The West Virginal Medical Journal, vol. 99:60-63.

Michael S. Stecker t al., "Stent Placement in Common Carotid and Internal Carotid Artery Stenoses with Use of an Open Transcervical Approach in a Patient with Previous Endarterectomy"; J. Vasc Interv Radiol 2002; 13:413-417.

Takao Ohki, M.D., et al., "Efficacy of a proximal occlusion catheter with reversal of flow in the prevention of embolic events during carotid artery stenting: An experimental analysis" (J Vasc Surg 2001; 33:504-9).

David W. Chang, M.D., et al, "A new approach to carotid angioplasty and stenting with transcervical occlusion and protective shunting: Why it may be a better carotid artery intervention" (J Vasc Surg 2004; 39:994-1002.)

Enrique Criado, M.D, et al. "Transcervical Carotid Artery Angioplasty and Stenting with Carotid Flow Reversal: Surgical Tech-

nique" Ann Vasc Surg 2004; 18: 257-261.
Enrique Criado, M.D., et al. "Carotid angioplasty with internal carotid artery flow reversal is well tolerated in the awake patient" Journal of Vascular Surgery, vol. 40, No. 1, 2004.
MomaPresn (AET) 2002 Biamino, G; MO.MA as a distal protective device, University of Leipzig—Heart Center Department of Clinical and Interventional; Angiology Leipzig, Germany; 2002.
Mark C. Bates, M.D., et al. "Internal Carotid Artery Flow Arrest/Reversal Cerebral Protection Techniques" The West Virginal Medical Journal, Mar./Apr., vol. 99, 2004:99.
David W. Chang, M.D., "Carotid Angioplasty and Stenting Using Transcervical Occlusion and Protective Shunting Via a Mini Incision in the Neck: A New Technique for Difficult Femoral Access or Filter Placement May Be the Better Carotid Artery Intervention" 30th Global: Vascular and Endovascular Issues, Techniques and Horizons.
Carlo A. Adami, M.D., et al., "Use of the Parodi Anti-Embolism System in Carotid Stenting: Italian Trial Results" J Endovasc Ther 2002; 9:147-154.
Mark C. Bates M.D., et al. "Reversal of the Direction of Internal Carotid Artery Blood Flow by Occlusion of the Common and External Carotid Arteries in a Swine Model" Catherization and Cardiovascular Intervention 60:270-275 (2003).
Enrique Criado, M.D., et al. "Transcervical carotid stenting with internal carotid artery flow reversal: Feasability and preliminary results" (J Vasc Surg 2004; 40: 476-83).
J. Theron, et al. "New Triple Coaxial Catheter System for Carotid Angioplasty with Cerebral Protection" AJNR 11:869-874, Sep./Oct. 1990 0195-6108/90/1106-0869 @ American Society of Neurology.
MO.MA Brochure; Proximal Flow Blockage Cerebral Protection Device—INVATEC.
Criado, F.J., et al., Access strategies for carotid artery intervention. *J Invasive Cardiol*, 2000. 12(1): p. 61-8.
Reekers, J. A. (1998). "A balloon protection sheath to prevent peripheral embolization during aortoiliac endovascular procedures." Cardiovasc Intervent Radiol 21(5): 431-3.
Chang, M.D., "Carotid Angioplasty and Stenting Using Transcervical Occlusion and Protective Shunting Via a Mini Incision in the Neck: A New Technique for Difficult Femoral Access or Filter Placement May Be the Better Carotid Artery Intervention" 30th Global: Vascular and Endovascular Issues, Techniques and Horizons. XXVII 6.1-XXVII 6.2.
Criado, M.D., et al. (2004) "Carotid angioplasty with internal carotid artery flow reversal is well tolerated in the awake patient" Journal of Vascular Surgery, 40(1):92-7.
Diederich et al. (2004) "First Clinical experiences with an endovascular clamping system for neuroprotection during carotid stenting" *Eur. J. Vasc. Endovasc. Surg*. 28:629-633.
Diethrich, E. B. (2004). The Direct Cervical Carotid Artery Approach. Carotid Artery Stenting: Current Practice and Techniques. N. Al-Mubarak, G. S. Roubin, S. Iyer and J. Vitek. Philadephia, Lippincott Williams & Wilkins: Chapter 11. pp. 124-136.
Perez-Arjona, E. A., Z. DelProsto, et al. (2004). "Direct percutaneous carotid artery stenting with distal protection: technical case report." Neurol Res 26(3): 338-41.
Ouriel, K., R. K. Greenberg, et al. (2001). "Hemodynamic conditions at the carotid bifurcation during protective common carotid occlusion." J Vasc Surg 34(4): 577-80.
Parodi et al. (2000). "Initial evaluation of carotid angioplasty and stenting with three different cerebral protection devices" J. Vasc. Surg. 32:1127-1136.

* cited by examiner

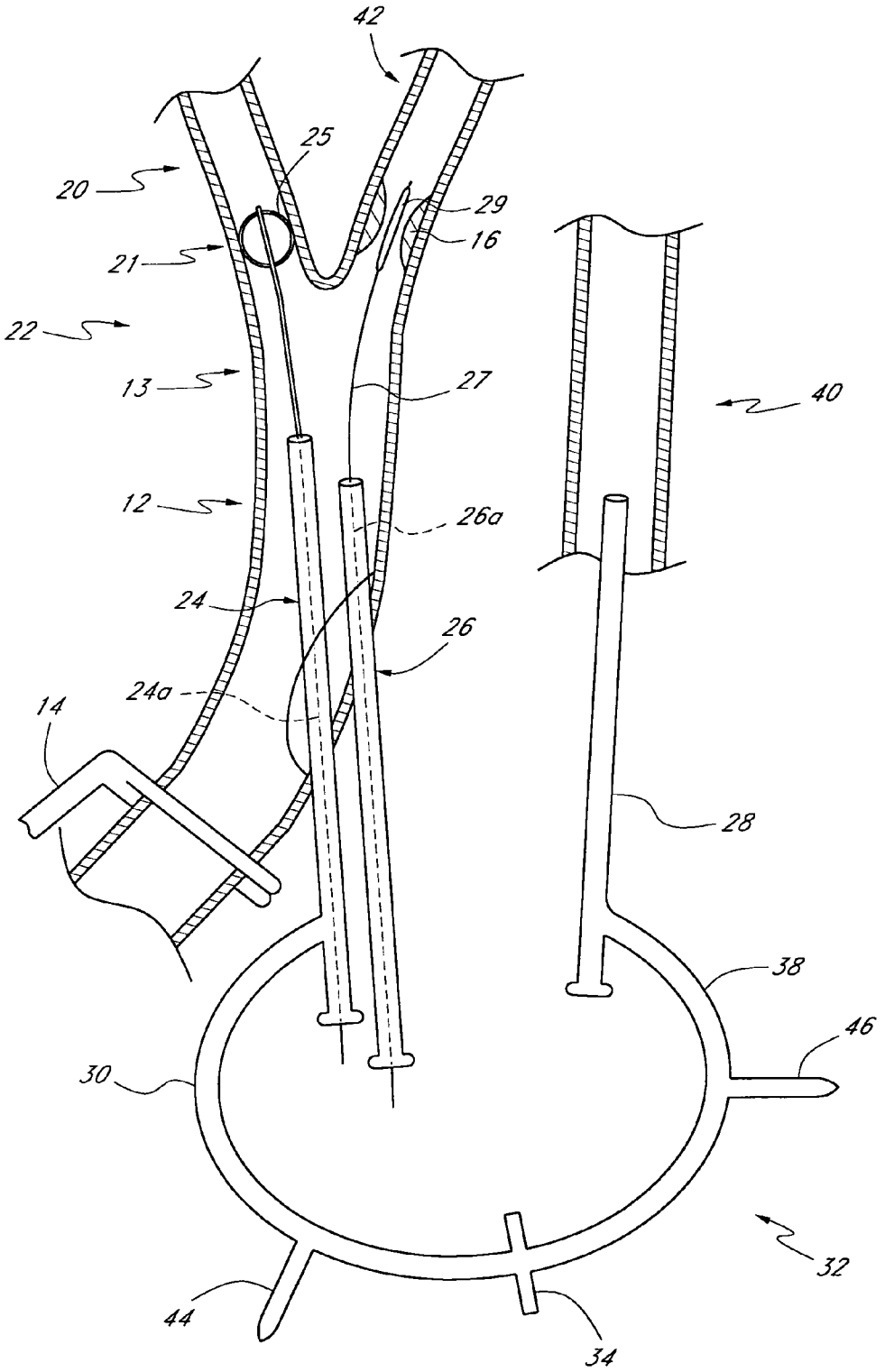

FIG. 1

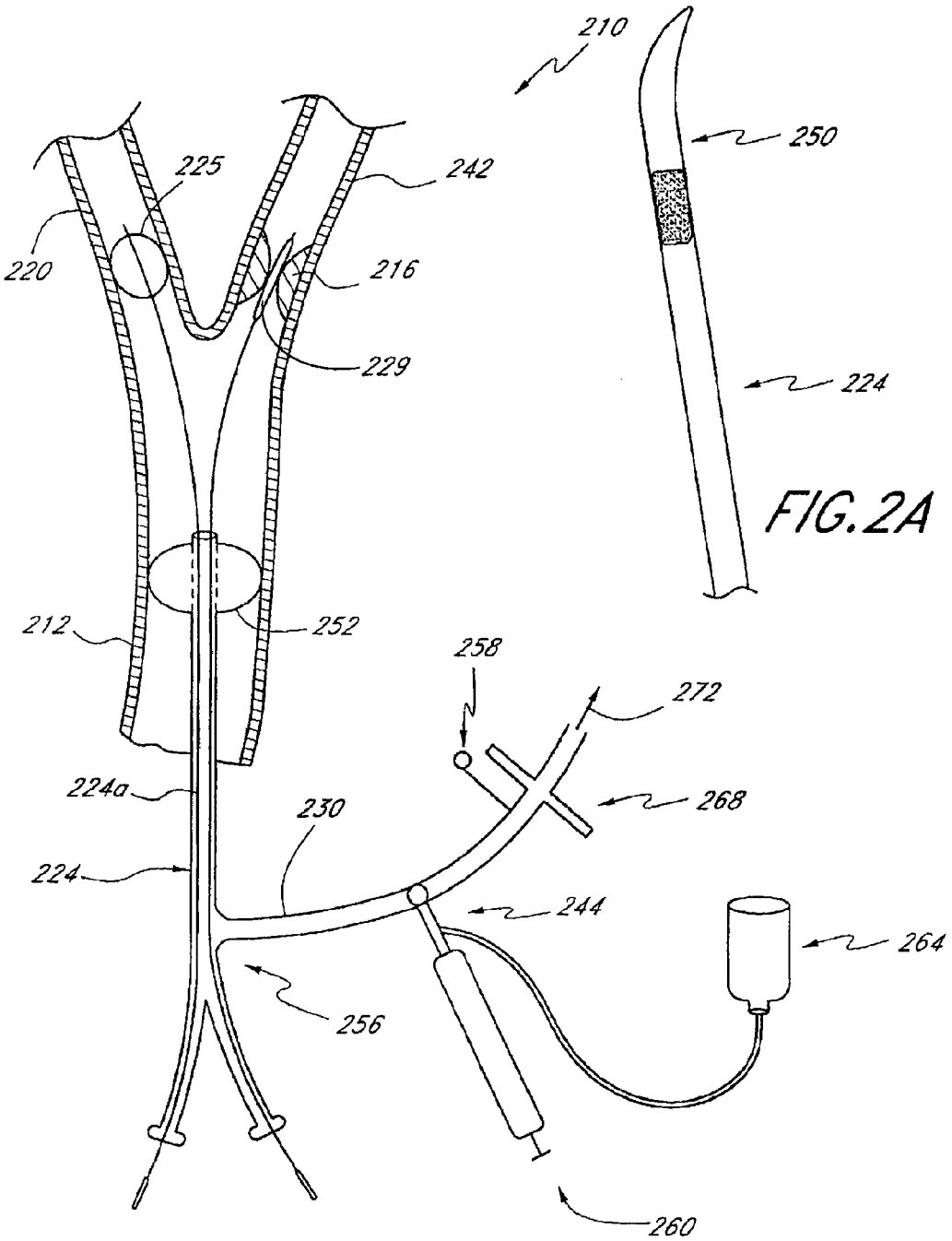
210
250
225
242
220
216
229
224
212
252
258
272
224a
230
268
224
244
264
256
260

FIG. 2A

FIG. 2

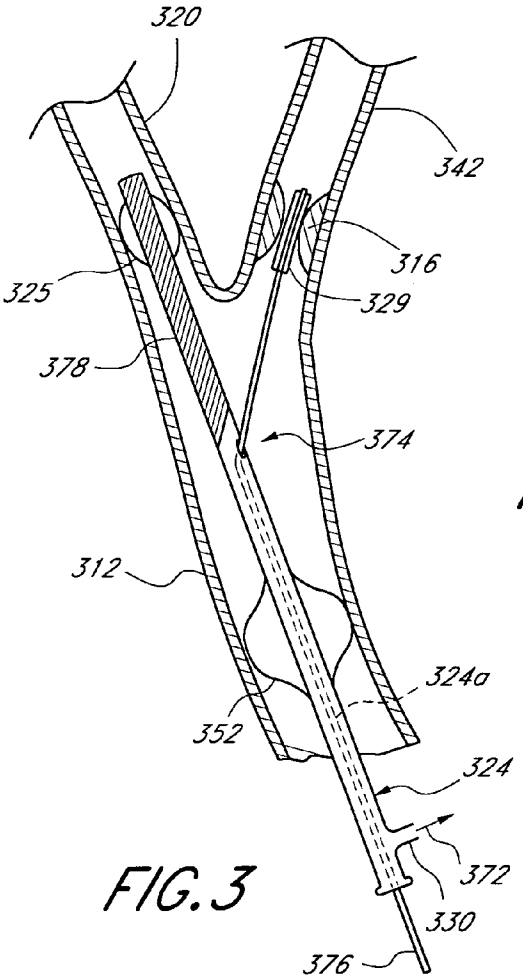

FIG. 3

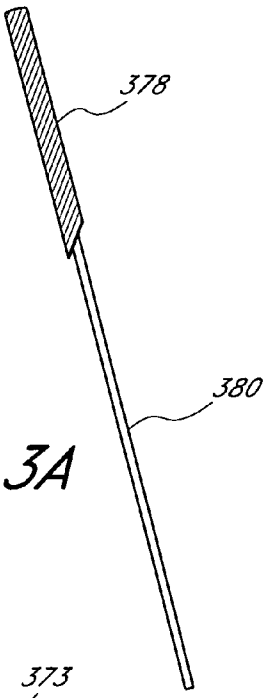

FIG. 3A

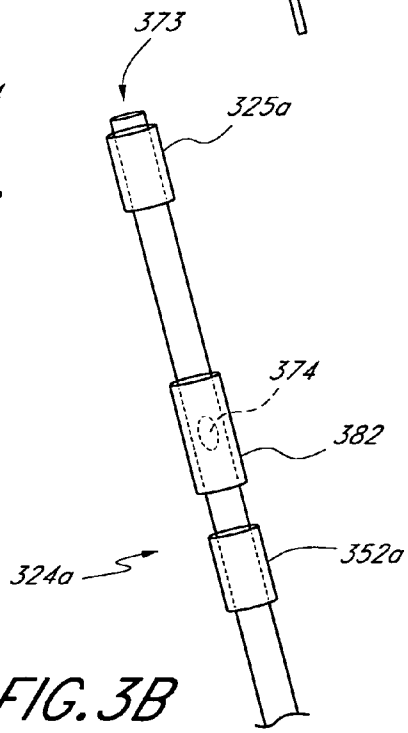

FIG. 3B

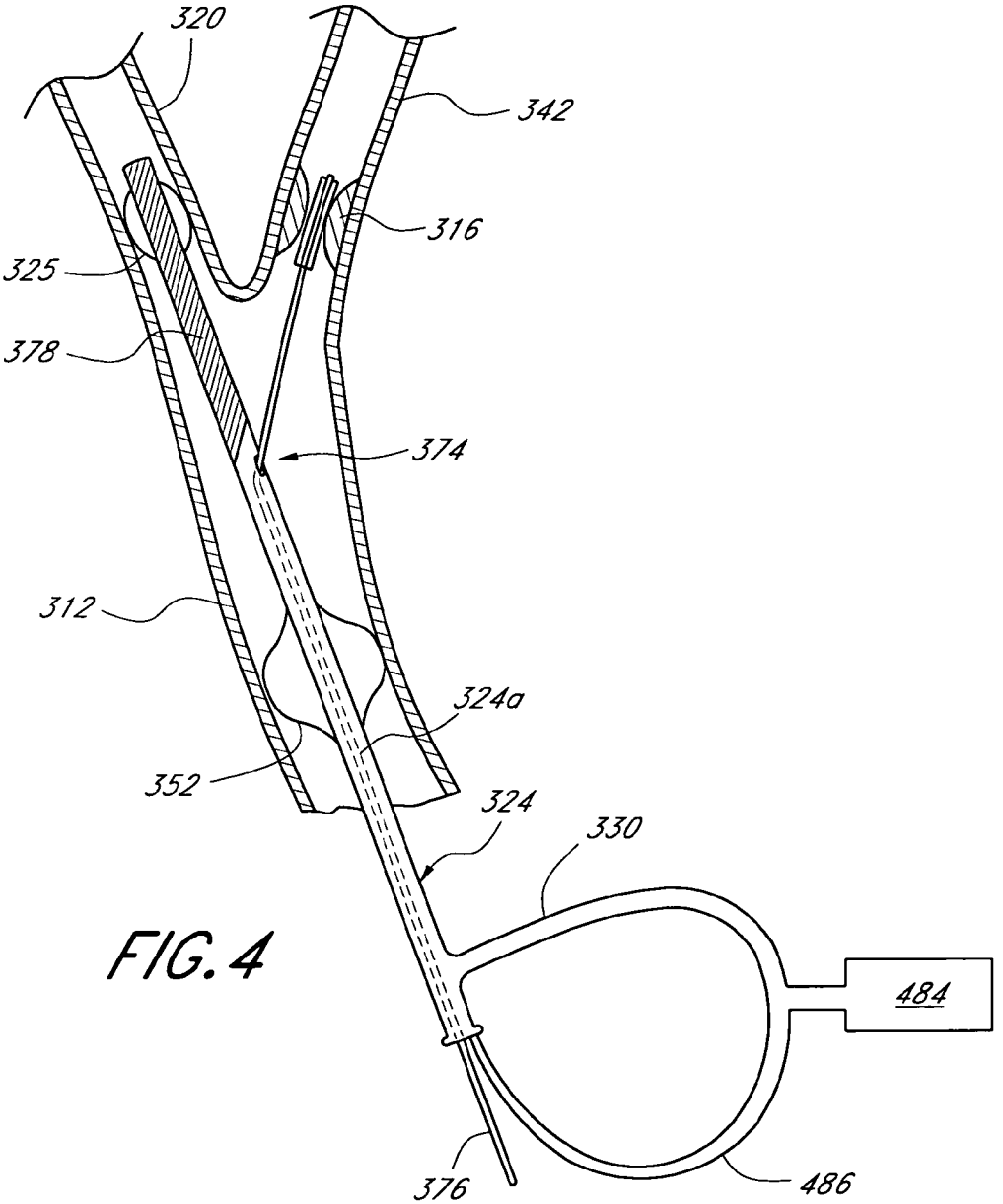
320
342
316
325
378
374
312
324a
352
324
330
484
376
486

FIG. 4

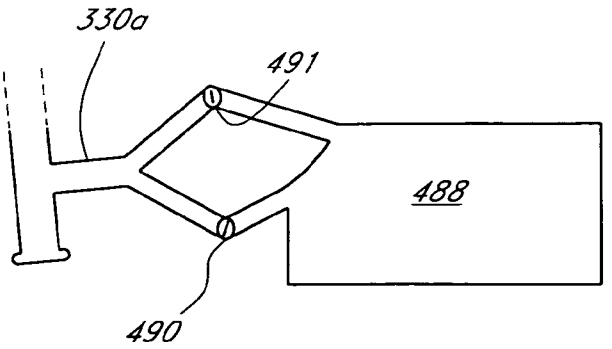
330a
491
488
490

FIG. 4A

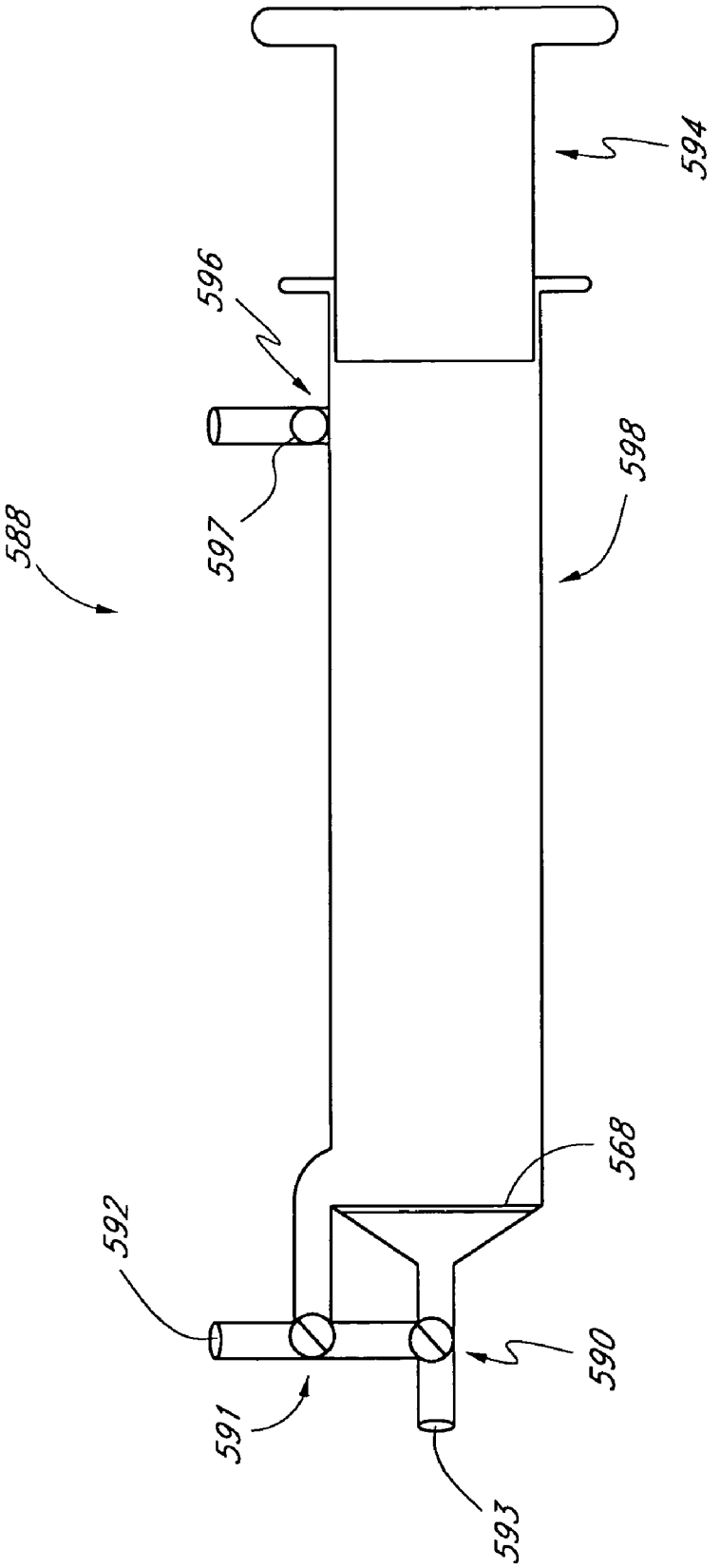

FIG. 5

METHOD AND APPARATUS FOR TREATING A CAROTID ARTERY

RELATED APPLICATIONS

This application claims the benefit under 35 U.S.C. §119 (e) of U.S. Provisional Application No. 60/524,069, filed Nov. 21, 2003, titled METHOD AND APPARATUS FOR CAROTID ANGIOPLASTY AND STENTING USING TRANSCERVICAL OCCLUSION AND PROTECTIVE SHUNTING; U.S. Provisional Application No. 60/569,843, filed May 10, 2004, titled METHOD AND APPARATUS FOR CAROTID ANGIOPLASTY AND STENTING USING TRANSCERVICAL OCCLUSION AND PROTECTIVE SHUNTING; and U.S. Provisional Application No. 60/587,067, filed Jul. 12, 2004, titled METHOD AND APPARATUS FOR CAROTID ANGIOPLASTY AND STENTING USING TRANSCERVICAL OCCLUSION AND PROTECTIVE SHUNTING.

BACKGROUND OF THE INVENTION

1. Field of the Invention

Certain inventions disclosed herein relate to treating a carotid artery. For example, a carotid artery may have a lesion or a partial occlusion that can be treated using the methods and apparatus disclosed herein.

2. Description of the Related Art

Carotid angioplasty and stenting (CAS) is a minimally invasive approach for treating carotid stenoses. Since its introduction two decades ago, the use of CAS has steadily increased, with 8% of the 107,000 carotid procedures performed in Europe in 2001 utilizing CAS. The prospect of an outpatient procedure without the discomfort of a sizable neck incision appears to be driving patient decision making away from carotid endarterectomy, the standard procedure for carotid bifurcation disease for the past fifty years.

SUMMARY OF THE INVENTION

One disclosed embodiment comprises an apparatus for use in carotid angioplasty. The apparatus comprises a catheter having a distal end and a proximal end opposite the distal end, and first and second occlusive members, of which at least the first occlusive member is located on the catheter. The first and second occlusive members are configured to reverse the natural direction of blood flow in the internal carotid artery when the first occlusive member occludes the common carotid artery and the second occlusive member occludes the external carotid artery. The catheter has a first shaft portion extending proximally from the first occlusive member. The first shaft portion has a maximum cross-section sized to be insertable into the common carotid artery. The first shaft portion has a relatively short length suitable for transcervical access to the common carotid artery. The catheter has a blood entry port located distal of the first occlusive member. The apparatus further comprises a collection reservoir configured to be connected to the catheter and placed in passive fluid communication with the blood entry port.

Another disclosed embodiment comprises a method of treating a lesion in a carotid artery in a patient. The method comprises inserting a catheter into the carotid vasculature via a transcervical approach, and occluding blood flow in the common carotid artery and the external carotid artery, thus reversing the direction of natural blood flow in the internal carotid artery. The method further comprises allowing blood to flow into a blood entry port in the catheter, and passively collecting the blood in a reservoir.

Another disclosed embodiment comprises an apparatus for use in carotid angioplasty. The apparatus comprises a catheter having a distal end and a proximal end opposite the distal end, and first and second occlusive members, of which at least the first occlusive member is located on the catheter. The first and second occlusive members are configured to reverse the natural direction of blood flow in the internal carotid artery when the first occlusive member occludes the common carotid artery and the second occlusive member occludes the external carotid artery. The catheter has a first shaft portion extending proximally from the first occlusive member. The first shaft portion has a maximum cross-section sized to be insertable into the common carotid artery. The first shaft portion has a relatively short length suitable for transcervical access to the common carotid artery. The catheter has a blood entry port located distal of the first occlusive member. The apparatus further comprises a passive fluid conduit and a collection reservoir. The collection reservoir is configured to be connected to the catheter via the passive fluid conduit.

Another disclosed embodiment comprises a method for treating lesions in the carotid artery of a mammalian body. The method comprises transcervical access and blocking of blood flow through the common carotid artery, shunting blood from the internal carotid artery to the venous system of the mammalian body and treating the lesion in the carotid artery. The method may optionally further comprise blocking blood flow through the external carotid artery.

In the method, access to the carotid artery can optionally be obtained percutaneously, or via a cutdown incision, or with any suitable technique. The treating step of the method can optionally include dilating the lesion with a balloon. The treating step of the method can optionally include stenting the dilated lesion. The shunting step of the method can optionally include filtering the blood for debris. The blocking step of the method can optionally include occluding the external carotid artery with a balloon. The blocking step of the method can optionally include occluding the common carotid artery with a balloon. The blocking step of the method can optionally include clamping the common carotid artery. The introducing step of the method can optionally include positioning a single sheath with balloons to occlude the common and external carotid artery and a side port for deployment of an angioplasty balloon or stent. The blocking step of the method can optionally include introducing at least one catheter directly into the common carotid artery. The introducing step of the method can optionally include introducing first and second introducer sheaths directly into the common carotid artery. The introducing step of the method can optionally include introducing first and second balloon catheters directly into the common carotid artery.

Another disclosed embodiment comprises a method for treating lesions in the carotid artery. The method comprises transcervical access, blocking blood flow through the common carotid artery to allow safe treatment of the lesion and returning blood flow back to the carotid artery. The method may further comprise blocking blood flow through the external carotid artery.

In the method, the blood in the carotid artery may be actively withdrawn and returned to the carotid artery. In the method, access to the carotid artery can optionally be obtained percutaneously, or via a cutdown incision, or with any suitable technique. The treating step of the method can optionally include dilating the lesion with a balloon. The treating step of the method can optionally include stenting the dilated lesion. The shunting step of the method can optionally

include filtering the blood for debris. The blocking step of the method can optionally include occluding the external carotid artery with a balloon. The blocking step of the method can optionally include occluding the common carotid artery with a balloon. The blocking step of the method can optionally include clamping the common carotid artery. The introducing step of the method can optionally include positioning a single sheath with balloons to occlude the common and external carotid artery and a side port for deployment of an angioplasty balloon or stent. The blocking step of the method can optionally include introducing at least one catheter directly into the common carotid artery. The introducing step of the method can optionally include introducing first and second introducer sheaths directly into the common carotid artery. The introducing step of the method can optionally include introducing first and second balloon catheters directly into the common carotid artery.

Another disclosed embodiment comprises a method for treatment of lesions in the carotid artery. The method comprises transcervical access, blocking blood flow through the common carotid artery and passive collection of blood and debris and subsequent return of filtered blood to the carotid artery. The method may further comprise blocking blood flow through the external carotid artery.

In the method, access to the carotid artery can optionally be obtained percutaneously, or via a cutdown incision, or with any suitable technique. The treating step of the method can optionally include dilating the lesion with a balloon. The treating step of the method can optionally include stenting the dilated lesion. The shunting step of the method can optionally include filtering the blood for debris. The blocking step of the method can optionally include occluding the external carotid artery with a balloon. The blocking step of the method can optionally include occluding the common carotid artery with a balloon. The blocking step of the method can optionally include clamping the common carotid artery. The introducing step of the method can optionally include positioning a single sheath with balloons to occlude the common and external carotid artery and a side port for deployment of an angioplasty balloon or stent. The blocking step of the method can optionally include introducing at least one catheter directly into the common carotid artery. The introducing step of the method can optionally include introducing first and second introducer sheaths directly into the common carotid artery. The introducing step of the method can optionally include introducing first and second balloon catheters directly into the common carotid artery.

Certain objects and advantages of the invention are described herein. Of course, it is to be understood that not necessarily all such objects or advantages may be achieved in accordance with any particular embodiment of the invention. Thus, for example, those skilled in the art will recognize that the invention may be embodied or carried out in a manner that achieves or optimizes one advantage or group of advantages as taught herein without necessarily achieving other objects or advantages as may be taught or suggested herein.

All of the embodiments summarized above are intended to be within the scope of the invention herein disclosed. However, despite the foregoing discussion of certain embodiments, only the appended claims (and not the present summary) are intended to define the invention. The summarized embodiments, and other embodiments of the present invention, will become readily apparent to those skilled in the art from the following detailed description of the preferred embodiments having reference to the attached figures, the invention not being limited to any particular embodiment(s) disclosed.

BRIEF DESCRIPTION OF THE DRAWINGS

FIG. **1** is a schematic view of one embodiment of a method and apparatus for treating a carotid artery.

FIG. **2** is a schematic view of another embodiment of a method and apparatus for treating a carotid artery.

FIG. **2**A is a side view of a dilator tip usable with apparatus and methods disclosed herein, including the apparatus and methods of FIG. **2**.

FIG. **3** is a schematic view of another embodiment of a method and apparatus for treating a carotid artery.

FIG. **3**A is a side view of a blocker and pusher rod usable with apparatus and methods disclosed herein, including the apparatus and methods of FIG. **3**.

FIG. **3**B is a detail view of another embodiment of the catheter shown in FIG. **3**.

FIG. **4** is a schematic view of another embodiment of a method and apparatus for treating a carotid artery.

FIG. **4**A a schematic view of another embodiment of the pump reservoir shown in FIG. **4**.

FIG. **5** is a schematic view of another embodiment of the pump reservoir of FIG. **4**.

DETAILED DESCRIPTION OF THE PREFERRED EMBODIMENT

An approach called Transcervical Occlusion (of the CCA) and Proximal Shunting (TOPS) can be employed in carotid angioplasty.

In one embodiment, depicted in FIG. **1**, a method of treating a carotid artery can be performed in the operating theater. After mild sedation of the patient, a mixture of 1% lidocaine and 0.5% marcaine can be used to anesthetize the skin two centimeters above the clavicle. A 2 cm transverse incision is made centered over the medial border of the sternocleidomastoid muscle. The muscle is retracted laterally and the common carotid artery (CCA) **12** exposed circumferentially over a two-centimeter length.

After heparin (for example, about 70 IU/kg to about 100 IU/kg) is administered to increase the activated clotting time (to greater than 250 seconds, for example), a needle (not shown) is introduced directly into the CCA **12** above the position of a surgical clamp **14**. Injection of contrast under fluoroscopy in the appropriate anterior oblique plane localizes the carotid bifurcation and the lesion **16** in a "worst view" magnified angiogram. A guidewire (not shown) is advanced to the distal carotid bulb **22** or to the external carotid artery **20**. A first sheath **24** is advanced until the dilator (a component of the sheath not shown) straightens the tip of the guidewire and then the sheath **24** is advanced over the dilator to the distal CCA **13** or the external carotid artery (ECA) **20**. Intracranial carotid angiography is performed (AP Towne and lateral view) to document any pre-existent intracranial arterial pathology and to evaluate collateral circulation.

The first sheath **24** can be placed directly in the CCA **12** parallel to a smaller second introducer sheath **26** placed with its tip in the distal CCA **13**. A stitch may be placed around the entrance of the first sheath **24** and a vascular tourniquet (not shown) and umbilical tape (not shown) may be looped around the CCA to allow rapid hemostasis of the puncture site in the event of catheter dislodgement. A guidewire is directed into the ECA **20** through the first arterial sheath **24** and a balloon catheter **25** is used to occlude the proximal ECA **21**. Occlusion of the ECA **20** and reversal of blood flow in the internal carotid artery (ICA) **42** can be verified with angiography after clamping the CCA **12**.

A sidearm **30** of the first sheath **24** is connected to a filter **34** with a holder apparatus (not shown) that is attached to a sidearm **38** of a third sheath **28** in fluid communication with the internal jugular vein **40**. This configuration forms a shunt **32**. With the surgical clamp **14** applied to the CCA **12**, retrograde flow of contrast from the internal carotid artery (ICA) **42** into the internal jugular vein **40** through the shunt **32** can be confirmed using fluoroscopy or duplex ultrasound. The carotid lesion **16** is crossed with a guidewire **27** from the second sheath **26** under flow reversal cerebral protection and the lesion **16** is dilated with a balloon **29**.

If rapid retrograde flow of contrast is not seen with initiation of the shunt **32**, forceful aspiration of blood using a syringe (for example a 20 cc syringe) through the first sheath **24** is performed, for example, after each angioplasty. Hence, retrograde passage of embolic material is provided. The blood is returned to the patient through a three way stopcock (for example, stopcock **44** and stopcock **46**) attached to the shunt **32** or filter **34**. A stent (for example an 8 or 10 mm×24 mm stent) can be deployed across the lesion **16** into the CCA **12**. The stent can be serially post dilated with an angioplasty balloon (for example a 5 or 6 mm×2 cm angioplasty balloon).

Completion of cervical and intracranial carotid angiography is performed after releasing the external carotid occlusion balloon **25** and the common carotid clamp **14**. Once satisfactory treatment of the lesion **16** is observed, the first arterial sheath **24** and second arterial sheath **26** are removed with simultaneous repair of the arterial punctures using previously placed exit site sutures.

In some embodiments, either or both of the sheaths **24**, **26** may have an insertable length or first shaft portion extending proximally from the distal end of the sheath(s). Over the entirety of the insertable length, the sheath(s) **24**, **26** have a cross-sectional size (e.g., about 6-8 French) which is suitable for insertion into the CCA **12**. (Although the cross-sectional size need not be uniform along the insertable length, the maximum cross-sectional size along the insertable length should be suitable for insertion into the CCA.) In certain such embodiments, the insertable length is less than about 75 cm, less than about 50 cm, less than about 30 cm, or less than about 15 cm. In still other embodiments, the insertable length is between about 2 cm and about 25 cm, or between about 2 cm and about 15 cm. More generally, the insertable length may be relatively short as may be suitable for transcervical access to the CCA.

In some embodiments, one or both of the shafts **24***a*, **26***a* of the sheaths **24**, **26** is constructed to be generally rigid. Advantageously, a rigid sheath **24**/**26** can be inserted into the CCA **12** without need to "ride" the sheath **24**/**26** over a guidewire. As another alternative either shaft **24***a*/**26***a* may be made generally rigid but sufficiently malleable to permit the user to "pre-bend" the shaft **24***a*/**26***a*, such that the shaft maintains the bent shape imparted by the user. With such a malleable shaft **24***a*/**26***a*, the user can custom-shape the sheath **24**/**26** to fit the vasculature of the patient, and more easily manipulate the sheath **24**/**26** into position in the CCA **12**. The pre-bend may be made based on the user's observations of the patient's carotid vasculature. A sheath **24**/**26** which is rigid and/or malleable as discussed above can be made from stainless steel or suitable soft metals, or any suitable polymeric materials.

In another embodiment, illustrated in FIGS. **2** and **2**A, a device **210** with only one arterial sheath or catheter **224** is used. A dilator **250** (see FIG. **2**A) for the arterial sheath **224** may have a shorter taper than conventional arterial sheaths and may be angled or curved towards the tip to help prevent injury to or dissection of the back wall of the artery. The stent/ICA angioplasty balloon **229** and the ECA occlusion balloon **225** are passed through the single sheath **224**, which is preferably large enough to deploy both balloons **225**, **229** as well as provide a lumen of sufficient size to facilitate retrograde passage of embolic material through the sheath **224**. This sheath may have a balloon **252** that prevents the sheath from dislodging and also may be large enough to occlude the CCA **212**, effectively replacing the surgical clamp **14** of the embodiment of FIG. **1**. The lesion **216** in the ICA **242** may be crossed with a guidewire and dilated with the stent/ICA angioplasty balloon **229**. The sidearm **230** of the arterial sheath **224** may have an opening **256**, which is preferably larger than the opening of a typical sheath, thus preventing a bottleneck for flow of blood carrying large embolic debris. A flow sensor **258** (a Doppler sensor, for example) may be part of the flow circuit, allowing for real-time and failsafe verification of flow and direction. A contrast injection/blood aspiration apparatus **260** can be attached to the sidearm **230** near the sideport **256**, along with a contrast reservoir **264**, to prevent inadvertent air embolism. A stopcock **244** can be employed at the junction between the sidearm **230** and injection/aspiration apparatus **260**. When stopcock **244** is open, the opened passage preferably has a large lumen. A filter **268** can also be attached to the sidearm **230**. The filter apparatus may be made integral to the device **210** to simplify the components in the device **210**. As indicated by flow arrow **272**, sidearm **230** can lead to a venous sheath (not shown) such as the sheath **28** of the embodiment of FIG. **1**.

In some embodiments, the sheath **224** may have an insertable length or first shaft portion extending proximally from the balloon **252**. Over the entirety of the insertable length, the sheath **224** has a cross-sectional size (e.g., about 6-8 French) which is suitable for insertion into the CCA **12**. (Although the cross-sectional size need not be uniform along the insertable length, the maximum cross-sectional size along the insertable length should be suitable for insertion into the CCA.) In certain such embodiments, the insertable length is less than about 75 cm, less than about 50 cm, less than about 30 cm, or less than about 15 cm. In still other embodiments, the insertable length is between about 2 cm and about 25 cm, or between about 2 cm and about 15 cm. More generally, the insertable length may be relatively short as may be suitable for transcervical access to the CCA.

In some embodiments, the shaft **224***a* of the sheath **224** is constructed to be generally rigid. Advantageously, a rigid sheath **224** can be inserted into the CCA **12** without need to "ride" the sheath **224** over a guidewire. As another alternative the shaft **224***a* may be made generally rigid but sufficiently malleable to permit the user to "pre-bend" the shaft **224***a*, such that the shaft maintains the bent shape imparted by the user. With such a malleable shaft **224***a*, the user can custom-shape the sheath **224** to fit the vasculature of the patient, and more easily manipulate the sheath **224** into position in the CCA **12**. The pre-bend may be made based on the user's observations of the patient's carotid vasculature. A sheath **224** which is rigid and/or malleable as discussed above can be made from stainless steel or suitable soft metals, or any suitable polymeric materials.

In a further embodiment, illustrated in FIGS. **3**, **3**A and **3**B, the arterial catheter/sheath **324** of the apparatus has an opening **374** in the side of the sheath distal of a first inflatable membrane or balloon **352**, located on the outside of the sheath **324**. A second inflatable membrane or balloon **325** is located on the outside of the sheath **324**, distal of the opening **374**. The balloon sheath **324** is inserted into the ECA **320**, for example over a guidewire (not shown). After the guidewire (not shown) has been removed from the sheath **324**, a blocker **378** (also shown in FIG. **3**A) is passed through the sheath **324** to

occlude the distal lumen **373** of the sheath **324**. The blocker **378** can be delivered by means of a detachable pusher rod **380**. Alternately, a valve (not shown) or other mechanism may be fashioned to close the lumen **373** of the sheath **324** leading to ECA **320** after removal of the guidewire. The second balloon **325** is then inflated to create a seal preventing flow in the ECA **320**. The first balloon **352** may be inflated to occlude the CCA **312**. An angioplasty balloon and stent **329** may then be passed over a guidewire **376** through the side opening **374** in the arterial sheath **324**, and into the internal carotid artery **342**, with or without predilation angioplasty of the lesion **316**.

In one embodiment, the first balloon **352** has an inflated diameter of up to about 13 mm and the second balloon **325** has an inflated diameter of up to 6 mm. The balloons are preferably spaced about 2-6 cm apart on the sheath **324**.

A sliding or removable sleeve **382** (see FIG. **3**B) may be included to cover the side opening **374** in the arterial sheath **324**, allowing two catheters (not shown) to pass through the sheath **324** without blood leakage out of the sheath **324** into the operative field external of the patient. The flexible and removable sleeve **382** may be formed from any suitable material such as plastic or be formed from any suitable peelable tape.

A sheath equipped with the sleeve **382** may be useful, for example, for treating common carotid lesions (not shown) or treating internal carotid lesions when the ECA is occluded. In these cases, the sheath cannot be extended into the occluded ECA so only the very tip of the sheath **324** with the distal second balloon **325** is placed into and occludes the CCA **352**. There is no need for a separate ECA occlusion balloon if the ECA is already occluded or severely narrowed with disease. Such a positioning of the sheath may result in the side opening **374** or hole in the sheath being external the patient. The side opening **374** is thus covered with the sleeve **382** to inhibit or prevent blood from spurting out of the sheath **324** onto the operative field.

An occluded ECA is not shown in FIG. **3**, but the following description assumes an occluded ECA, and the second balloon **325** positioned in, and occluding, the CCA **312**. A catheter (e.g. the catheter **329**) for performing angioplasty and stent deployment is passed through the end of the sheath for positioning in the ICA **342**. In this manner, the sheath **324** of FIG. **3** operates in a manner similar to the sheath **224** of FIG. **2**, with the second balloon **325** serving to occlude the CCA **312**. The first uninflated balloon **352** of the sheath **324** remains outside of the patient and thus inactive. Note, in this case, no blocker **378** is used.

If the ECA is not occluded, the sleeve **382** can be either peeled away or slid away to allow the sheath **324** to be pushed farther distally through the incision and into the hole in the artery so that the second balloon **325** is positioned in the ECA **320**. Such a placement of the sheath **324**, as discussed above, permits deployment of the stent **329** through the sidehole **374** instead of through the end hole **373** of the sheath **324**. The decision concerning where to place the tip of the sheath is made during the initial angiogram. As can be appreciated, such a sheath may also be useful for performing the procedure illustrated in FIG. **2**.

As indicated by flow arrow **372**, a sidearm **330** of the sheath **324** can lead to a shunt such as the shunt **32** described above, a filter, a contrast injection/blood aspiration apparatus such as the apparatus **260** described above, a contrast reservoir such as the reservoir **264** described above, stopcocks, a venous sheath such as the sheath **28** of FIG. **1**, or any combination of the above.

In an alternative embodiment, the sheath **324** of FIGS. **3-4** may have a closed distal tip (instead of the open tip and blocker shown in FIGS. **3-4**). Such a closed distal tip preferably has a tapered, atraumatic configuration. With a closed distal tip, the sheath **324** can be inserted into the CCA **12** and ECA **320** without the use of a guidewire.

In some embodiments, the sheath **324** may have an insertable length or first shaft portion extending proximally from the first balloon **352**. Over the entirety of the insertable length, the sheath **324** has a cross-sectional size (e.g., about 6-8 French) which is suitable for insertion into the CCA **12**. (Although the cross-sectional size need not be uniform along the insertable length, the maximum cross-sectional size along the insertable length should be suitable for insertion into the CCA.) In certain such embodiments, the insertable length is less than about 75 cm, less than about 50 cm, less than about 30 cm, or less than about 15 cm. In still other embodiments, the insertable length is between about 2 cm and about 25 cm, or between about 2 cm and about 15 cm. More generally, the insertable length may be relatively short as may be suitable for transcervical access to the CCA.

In some embodiments, the shaft **324***a* of the sheath **324** is constructed to be generally rigid. Advantageously, a rigid sheath **324** can be inserted into the CCA **12** without need to "ride" the sheath **324** over a guidewire. As another alternative the shaft **324***a* may be made generally rigid but sufficiently malleable to permit the user to "pre-bend" the shaft **324***a*, such that the shaft maintains the bent shape imparted by the user. With such a malleable shaft **324***a*, the user can custom-shape the sheath **324** to fit the vasculature of the patient, and more easily manipulate the sheath **324** into position in the CCA **12**. The pre-bend may be made based on the user's observations of the patient's carotid vasculature. A sheath **324** which is rigid and/or malleable as discussed above can be made from stainless steel or suitable soft metals, or any suitable polymeric materials.

Certain embodiments do not employ venous shunting. One such embodiment is illustrated in FIG. **4**. The arterial sheath sidearm **330** is in fluid communication with a pump **484** that allows control and verification of the amount of flow. After passing through a filter (that can be included with pump **484**), the blood is returned to the arterial sheath **324**. Blood return may be accomplished through a separate arterial channel **486** or by causing the blood to flow into a pump reservoir **488** (see FIG. **4**A) and returning the blood through the same sidearm port **330***a* after the period of cerebral protection. The latter approach may employ valves such as valves **490** and **491**.

FIG. **5** illustrates an embodiment of a reservoir apparatus **588** that may be employed to passively collect blood from the sidearm **30/230/330** of the sheath **24/224/324**. The apparatus **588** comprises a filter **568**, valves **590**, **591** and **597**, blood inlet port **592**, blood outlet port **593**, plunger **594**, reservoir **598**, and air outlet port **596**. The sidearm **30/230/330** is connected to the blood inlet port **592** and the valve **591** is initially set to permit blood flowing from the sidearm to flow from the inlet port **592** into the reservoir **598**, while the valve **590** is initially set to prevent fluid from flowing from the reservoir **598** past the valve **590**. In addition, the blood outlet port is connected to an arterial or venous return line, e.g. the arterial channel **486**. During the period of cerebral protection (when the arterial blood flow is reversed via the balloon(s) and/or clamp disclosed above), this initial setup permits arterial blood to flow "passively" under natural arterial pressure, proximally through the sheath **24/224/324**, through the sidearm **30/230/330** and into the reservoir **598**, without need for additional or external pressure sources. Thus the arterial blood is collected passively in the reservoir apparatus **588**; as

the blood is collected in the reservoir **598** air is vented through the air outlet port **596** (the valve **597** of which is left open for this purpose).

After the period of cerebral protection is over and the natural direction of blood flow is restored (e.g., via deflation of the balloon(s) and/or release of the clamp), the collected blood can be returned to the patient's vasculature, e.g. via the CCA **12** and implanted sheath **24/224/324**. To do this the valves **591** and **597** are closed, and the valve **590** is opened. The plunger **594** is then depressed to force the collected blood out of the reservoir **598**, through the filter **568** and valve **590**, and out through the blood outlet port **593**. If a return line such as the arterial channel **486** is employed, the blood proceeds through the channel **486** and implanted sheath, and back into the CCA **12**.

If desired a non-rigid overflow chamber (such as a ventilated bag) can be connected to the air outlet port **596** to collect any blood that overflows the reservoir **598**. As yet another option, a metering valve (not shown) can be installed on the sidearm **30/230/330** (or between the sidearm and the reservoir **598**) to adjust the blood flow rate into the reservoir **598**, to account for patient-to-patient variation in natural arterial flow rates.

As a further option, a contrast reservoir (not shown) can be coupled to the return line/arterial channel downstream of the blood outlet port **593**, via a "T" fitting or the like, to add contrast fluid as desired to the blood as it returns to the patient.

Additional embodiments comprise kits. A first kit comprises the apparatus of FIG. **1**; a second kit comprises the apparatus of FIGS. **2-2**A; a third kit comprises the apparatus of FIGS. **3-3**B; a fourth kit comprises the apparatus of FIG. **4**; a fifth kit comprises the apparatus of FIG. **4**, with the apparatus of FIG. **4**A substituted for the corresponding apparatus of FIG. **4**. A sixth kit comprises the apparatus of FIG. **4**, with the apparatus of FIG. **5** substituted for the corresponding apparatus of FIG. **4**. Any of the aforementioned kits may further comprise special short-length (e.g. 15-45 cm) guidewires appropriate to the cervical approach. These short-length guidewires may be constructed to be malleable and retain a bent shape imparted by the user, in a manner similar to the malleable sheaths discussed above. Such guidewires can be constructed from stainless steel or suitable soft metals, and can be made thicker than typical guidewires.

Instead of or in addition to these short-length guidewires, any of the kits mentioned above may comprise a "bent" introducer needle with appropriate angulation to decrease the likelihood of backwall arterial puncture. The introducer needle may have a contrast injection sideport.

Although these inventions have been disclosed in the context of certain preferred embodiments and examples, it will be understood by those skilled in the art that the present invention extends beyond the specifically-disclosed embodiments to other alternative embodiments and/or uses of the inventions and obvious modifications and equivalents thereof. In addition, while a number of variations of the inventions have been shown and described in varying levels of detail, other modifications, which are within the scope of this invention, will be readily apparent to those of skill in the art based upon this disclosure. It is also contemplated that various combinations or subcombinations of the specific features and aspects of the embodiments may be made and still fall within the scope of the inventions. Accordingly, it should be understood that various features and aspects of the disclosed embodiments can be combined with or substituted for one another in order to form varying modes of the disclosed inventions. Thus, it is intended that the scope of the present invention herein disclosed should not be limited by the particular disclosed embodiments described above, but should be determined only by a fair reading of the claims that follow.

What is claimed is:

1. An apparatus for use in carotid angioplasty comprising:

first and second occlusive members that reverse the natural direction of blood flow in an internal carotid artery when said first occlusive member occludes a common carotid artery and said second occlusive member occludes an external carotid artery, wherein said first occlusive member abuts a wall of the common carotid artery to prevent blood flow through the common carotid artery across the first occlusive member and wherein said second occlusive member abuts a wall of the external carotid artery to prevent blood flow through the external carotid artery across the second occlusive member;

a catheter comprising a distal end and a proximal end, a blood entry port, and a first shaft portion extending proximally from said first occlusive member, said first shaft portion having a cross-section sized to be insertable into the common carotid artery and a length of between about 2 centimeters and about 25 centimeters so as to be suitable for transcervical access to the common carotid artery;

a fluid conduit in fluid communication with the blood entry port of the catheter to permit blood to flow through the catheter into the fluid conduit;

a flow sensor connected directly to the fluid conduit wherein the flow sensor senses blood flow through the fluid conduit;

a collection reservoir comprised of a receptacle defining an enclosed chamber that collects blood and that is connected to said catheter and placed in fluid communication with said blood entry port via the fluid conduit, wherein fluid communication comprises communication via a fluid flow path from said blood entry port to said collection reservoir without the assistance of fluid pressure sources other than arterial blood pressure;

a metering valve coupled to the fluid conduit, wherein the metering valve adjusts the flow rate through the fluid conduit; and

wherein said first occlusive member is located on said catheter.

2. The apparatus of claim **1**, wherein said second occlusive member is located on said catheter distal of said first occlusive member.

3. The apparatus of claim **1**, further comprising a filter configured to filter the blood collected in said collection reservoir.

4. An apparatus for use in carotid angioplasty comprising:

first and second occlusive members that reverse the natural direction of blood flow in an internal carotid artery when said first occlusive member occludes a common carotid artery and said second occlusive member occludes an external carotid artery, wherein said first occlusive member abuts a wall of the common carotid artery to prevent blood flow through the common carotid artery across the first occlusive member and wherein said second occlusive member abuts a wall of the external carotid artery to prevent blood flow through the external carotid artery across the second occlusive member;

a catheter comprising a distal end and a proximal end, a blood entry port, and a first shaft portion extending proximally from said first occlusive member, said first shaft portion having a cross-section sized to be insertable into the common carotid artery and a length of

between about 2 centimeters and about 25 centimeters so as to be suitable for transcervical access to the common carotid artery;

a fluid conduit that fluidly connects the catheter to a venous return sheath;

a flow sensor connected directly to the fluid conduit wherein the flow sensor senses blood flow through the fluid conduit;

a metering valve coupled to the fluid conduit, wherein the metering valve adjusts the flow rate through the fluid conduit;

wherein said first occlusive member is located on said catheter.

5. The apparatus of claim **1**, wherein said first shaft portion has a length of no greater than about 15 centimeters.

6. The apparatus of claim **1**, wherein the flow sensor senses a direction of blood flow through the fluid conduit.

7. The apparatus of claim **4**, wherein the flow sensor senses a direction of blood flow through the fluid conduit.

8. The apparatus of claim **1**, wherein the collection reservoir includes an air outlet port that vents air out of the collection reservoir as blood is collected in the collection reservoir.

9. The apparatus of claim **1**, wherein the flow sensor is a Doppler sensor.

10. The apparatus of claim **4**, wherein the flow sensor is a Doppler sensor.

11. The apparatus of claim **4**, wherein the flow sensor permits real time sensing of blood flow through the fluid conduit.

12. The apparatus of claim **4**, wherein said first shaft portion has a length of no greater than about 15 centimeters.

13. The apparatus of claim **4**, further comprising an aspiration apparatus fluidly connected to the fluid conduit, and a contrast injection reservoir fluidly coupled to the aspiration apparatus.

14. An apparatus for use in carotid angioplasty comprising:

first and second occlusive members that reverse the natural direction of blood flow in an internal carotid artery when said first occlusive member occludes a common carotid artery and said second occlusive member occludes an external carotid artery, wherein said first occlusive member abuts a wall of the common carotid artery to prevent blood flow through the common carotid artery across the first occlusive member and wherein said second occlusive member abuts a wall of the external carotid artery to prevent blood flow through the external carotid artery across the second occlusive member;

a catheter comprising a distal end and a proximal end, a blood entry port, and a first shaft portion extending proximally from said first occlusive member, said first shaft portion having a cross-section sized to be insertable into the common carotid artery and a length of between about 2 centimeters and about 25 centimeters so as to be suitable for transcervical access to the common carotid artery;

a collection reservoir comprised of a receptacle defining an enclosed chamber that collects blood and that is connected to said catheter and placed in fluid communication with said blood entry port, wherein the collection reservoir further includes an air outlet port that vents air out of the collection reservoir as blood is collected in the collection reservoir;

a fluid conduit that fluidly connects the catheter to the collection reservoir; and

wherein said first occlusive member is located on said catheter.

15. The apparatus of claim **14**, wherein the collection reservoir further includes a plunger that forces collected blood out of the collection reservoir through the blood outlet port.

16. An apparatus for use in carotid angioplasty comprising:

first and second occlusive members that reverse the natural direction of blood flow in an internal carotid artery when said first occlusive member occludes a common carotid artery and said second occlusive member occludes an external carotid artery, wherein said first occlusive member abuts a wall of the common carotid artery to prevent blood flow through the common carotid artery across the first occlusive member and wherein said second occlusive member abuts a wall of the external carotid artery to prevent blood flow through the external carotid artery across the second occlusive member;

a catheter comprising a distal end and a proximal end, a blood entry port, and a first shaft portion extending proximally from said first occlusive member, said first shaft portion having a cross-section sized to be insertable into the common carotid artery and a length of between about 2 centimeters and about 25 centimeters so as to be suitable for transcervical access to the common carotid artery;

a fluid conduit in fluid communication with the blood entry port of the catheter to permit blood to flow through the catheter into the fluid conduit;

a flow sensor connected directly to the fluid conduit wherein the flow sensor senses blood flow through the fluid conduit;

a collection reservoir comprised of a receptacle defining an enclosed chamber that collects blood and that is connected to said catheter and placed in fluid communication with said blood entry port via the fluid conduit;

a filter configured to filter the blood collected in said collection reservoir; and

wherein said first occlusive member is located on said catheter.

17. An apparatus for use in carotid angioplasty comprising:

first and second occlusive members that reverse the natural direction of blood flow in an internal carotid artery when said first occlusive member occludes a common carotid artery and said second occlusive member occludes an external carotid artery, wherein said first occlusive member abuts a wall of the internal carotid artery to prevent blood flow through the internal carotid artery across the first occlusive member and wherein said second occlusive member abuts a wall of the external carotid artery to prevent blood flow through the external carotid artery across the second occlusive member;

a catheter comprising a distal end and a proximal end, a blood entry port, and a first shaft portion extending proximally from said first occlusive member, said first shaft portion having a cross-section sized to be insertable into the common carotid artery and a length of between about 2 centimeters and about 25 centimeters so as to be suitable for transcervical access to the common carotid artery;

a fluid conduit in fluid communication with the blood entry port of the catheter to permit blood to flow through the catheter into the fluid conduit;

a flow sensor connected directly to the fluid conduit wherein the flow sensor senses blood flow through the fluid conduit;

a collection reservoir comprised of a receptacle defining an enclosed chamber that collects blood and that is connected to said catheter and placed in fluid communication with said blood entry port via the fluid conduit,

wherein the collection reservoir includes an air outlet port that vents air out of the collection reservoir as blood is collected in the collection reservoir; and

wherein said first occlusive member is located on said catheter.

18. An apparatus for use in carotid angioplasty comprising:

first and second occlusive members that reverse the natural direction of blood flow in an internal carotid artery when said first occlusive member occludes a common carotid artery and said second occlusive member occludes an external carotid artery, wherein said first occlusive member abuts a wall of the internal carotid artery to prevent blood flow through the internal carotid artery across the first occlusive member and wherein said second occlusive member abuts a wall of the external carotid artery to prevent blood flow through the external carotid artery across the second occlusive member;

a catheter comprising a distal end and a proximal end, a blood entry port, and a first shaft portion extending proximally from said first occlusive member, said first shaft portion having a cross-section sized to be insertable into the common carotid artery and a length of between about 2 centimeters and about 25 centimeters so as to be suitable for transcervical access to the common carotid artery;

a fluid conduit that fluidly connects the catheter to a venous return sheath;

a flow sensor connected directly to the fluid conduit wherein the flow sensor senses blood flow through the fluid conduit;

an aspiration apparatus fluidly connected to the fluid conduit;

a contrast injection reservoir fluidly coupled to the aspiration apparatus;

wherein said first occlusive member is located on said catheter.

19. The apparatus of claim **18**, wherein the flow sensor is a Doppler sensor.

20. The apparatus of claim **18**, wherein the flow sensor permits real time sensing of blood flow through the fluid conduit.

21. The apparatus of claim **18**, wherein said first shaft portion has a length of no greater than about 15 centimeters.

22. An apparatus for use in carotid angioplasty comprising:

first and second occlusive members that reverse the natural direction of blood flow in an internal carotid artery when said first occlusive member occludes a common carotid artery and said second occlusive member occludes an external carotid artery, wherein said first occlusive member abuts a wall of the common carotid artery to prevent blood flow through the common carotid artery across the first occlusive member and wherein said second occlusive member abuts a wall of the external carotid artery to prevent blood flow through the external carotid artery across the second occlusive member and wherein said second occlusive member is located on said catheter distal of said first occlusive member;

a catheter comprising a distal end and a proximal end, a blood entry port, and a first shaft portion extending proximally from said first occlusive member, said first shaft portion having a cross-section sized to be insertable into the common carotid artery and a length of between about 2 centimeters and about 25 centimeters so as to be suitable for transcervical access to the common carotid artery;

a fluid conduit in fluid communication with the blood entry port of the catheter to permit blood to flow through the catheter into the fluid conduit;

a flow sensor connected directly to the fluid conduit wherein the flow sensor senses blood flow through the fluid conduit;

a collection reservoir comprised of a receptacle defining an enclosed chamber that collects blood and that is connected to said catheter and placed in fluid communication with said blood entry port via the fluid conduit;

a metering valve coupled to the fluid conduit, wherein the metering valve adjusts the flow rate through the fluid conduit; and

wherein said first occlusive member is located on said catheter.

23. An apparatus for use in carotid angioplasty comprising:

first and second occlusive members that reverse the natural direction of blood flow in an internal carotid artery when said first occlusive member occludes a common carotid artery and said second occlusive member occludes an external carotid artery, wherein said first occlusive member abuts a wall of the common carotid artery to prevent blood flow through the common carotid artery across the first occlusive member and wherein said second occlusive member abuts a wall of the external carotid artery to prevent blood flow through the external carotid artery across the second occlusive member;

a catheter comprising a distal end and a proximal end, a blood entry port, and a first shaft portion extending proximally from said first occlusive member, said first shaft portion having a cross-section sized to be insertable into the common carotid artery and a length of between about 2 centimeters and about 25 centimeters so as to be suitable for transcervical access to the common carotid artery;

a fluid conduit in fluid communication with the blood entry port of the catheter to permit blood to flow through the catheter into the fluid conduit;

a flow sensor connected directly to the fluid conduit wherein the flow sensor senses blood flow through the fluid conduit;

a collection reservoir comprised of a receptacle defining an enclosed chamber that collects blood and that is connected to said catheter and placed in fluid communication with said blood entry port via the fluid conduit;

a metering valve coupled to the fluid conduit, wherein the metering valve adjusts the flow rate through the fluid conduit; and

a filter configured to filter the blood collected in said collection reservoir;

wherein said first occlusive member is located on said catheter.

24. An apparatus for use in carotid angioplasty comprising:

first and second occlusive members that reverse the natural direction of blood flow in an internal carotid artery when said first occlusive member occludes a common carotid artery and said second occlusive member occludes an external carotid artery, wherein said first occlusive member abuts a wall of the common carotid artery to prevent blood flow through the common carotid artery across the first occlusive member and wherein said second occlusive member abuts a wall of the external carotid artery to prevent blood flow through the external carotid artery across the second occlusive member;

a catheter comprising a distal end and a proximal end, a blood entry port, and a first shaft portion extending proximally from said first occlusive member, said first

shaft portion having a cross-section sized to be insertable into the common carotid artery and a length of between about 2 centimeters and about 25 centimeters so as to be suitable for transcervical access to the common carotid artery;

a fluid conduit in fluid communication with the blood entry port of the catheter to permit blood to flow through the catheter into the fluid conduit;

a flow sensor connected directly to the fluid conduit wherein the flow sensor senses blood flow through the fluid conduit;

a collection reservoir comprised of a receptacle defining an enclosed chamber that collects blood and that is connected to said catheter and placed in fluid communication with said blood entry port via the fluid conduit, wherein the collection reservoir includes an air outlet port that vents air out of the collection reservoir as blood is collected in the collection reservoir; and

a metering valve coupled to the fluid conduit, wherein the metering valve adjusts the flow rate through the fluid conduit;

wherein said first occlusive member is located on said catheter.

25. The apparatus of claim **14**, wherein said first shaft portion has a length of no greater than about 15 centimeters.

* * * * *