Filed July 8, 2025

On behalf of **Imperative Care, Inc.**
By: Joshua J. Stowell (Reg. No. 64,096)
Joseph R. Re (Reg. No. 31,291)
Brian C. Barnes (Reg. No. 75,805)
KNOBBE, MARTENS, OLSON & BEAR, LLP
2040 Main Street, 14th Floor
Irvine, CA 92614
Tel.: (949) 760-0404
Fax: (949) 760-9502
Email: BoxImperative580@knobbe.com

UNITED STATES PATENT AND TRADEMARK OFFICE

BEFORE THE PATENT TRIAL AND APPEAL BOARD

IMPERATIVE CARE, INC.,
Petitioner,

v.

INARI MEDICAL, INC.,
Patent Owner.

Case No. IPR2025-01264
Patent No. 12,016,580

PETITION FOR *INTER PARTES* REVIEW OF U.S. PATENET NO. 12,016,580

TABLE OF CONTENTS

Page No.

I. INTRODUCTION 1

II. THE ’580 PATENT 5

A. Overview 5

B. Prosecution History 10

C. Earliest Possible Priority Date 11

III. LEVEL OF ORDINARY SKILL 11

IV. CLAIM CONSTRUCTION 11

V. STATEMENT OF RELIEF REQUESTED 14

A. IPR Grounds 14

B. The Asserted References Are Prior Art 14

C. The Asserted References Are Analogous Art 15

VI. GROUNDS 1-8: GARRISON ALONE OR COMBINED WITH HARTLEY, SCHAFFER, AND/OR GOFF RENDERS CLAIMS 1, 5-6, 9, 11-30, 33-34 UNPATENTABLE 16

A. Independent Claim 1 16

1. Preamble [1]: “A method for the intravascular treatment of clot material within a blood vessel” 16

2. Limitation [1A]: “positioning a distal portion of an elongated shaft proximate to the clot material within the blood vessel” 18

3. Limitation [1B]: “pre-charging a vacuum in a pressure source” 19

TABLE OF CONTENTS
(*cont'd*)

Page No.

4. Limitation [1C]: "fluidly connecting the pressure source to the elongated shaft to apply the pre-charged vacuum to the elongated shaft to aspirate a first portion of the clot material into the elongated shaft" 22

5. Limitation [1D]: "unsealing an attachment member coupled to a proximal portion of the elongated shaft" 23

   a. Garrison 23

   b. Garrison and Schaffer 26

   c. Garrison and Hartley 29

6. Limitation [1E]: "advancing an interventional device distally through the attachment member and the elongated shaft" 32

7. Limitation [1F]: "engaging the interventional device with a second portion of the clot material remaining in the blood vessel" 35

B. Claim 5 37

C. Claim 6 41

D. Claim 9 43

E. Claim 11 43

F. Claim 12 45

G. Claim 13 45

H. Claim 14 45

I. Claim 15 46

TABLE OF CONTENTS
(*cont'd*)

Page No.

1. Tubular Member 46

2. Filament 47

a. Schaffer 47

b. Schaffer and Hartley 49

3. Button 55

J. Claim 16 55

K. Claim 17 57

L. Claim 18 58

M. Claim 19 63

N. Claim 20 66

O. Claim 21 67

P. Claim 22 70

Q. Claim 23 71

R. Claim 24 71

S. Claim 25 71

1. Garrison 71

2. Garrison and Goff 74

T. Claim 26 77

U. Claim 27 77

V. Claim 28 78

TABLE OF CONTENTS
(*cont'd*)

Page No.

W. Claim 29 78

X. Claim 30 78

Y. Claim 33 80

Z. Claim 34 81

VII. GROUNDS 9-14: GARRISON, SCHAFFER, HARTLEY AND/OR GOFF COMBINED WITH AKLOG AND/OR LAUB RENDERS CLAIM 10 UNPATENTABLE 81

A. Claim 10 81

VIII. SECONDARY CONSIDERATIONS 90

IX. *SOTERA* STIPULATION 90

X. MANDATORY NOTICES, GROUNDS FOR STANDING, AND FEE PAYMENT 91

A. Real Parties-In-Interest (37 C.F.R. §42.8(b)(1)) 91

B. Related Matters (37 C.F.R. §42.8(b)(2)) 91

C. Lead and Backup Counsel (37 C.F.R. §42.8(b)(3)) 92

D. Service Information (37 C.F.R. §42.8(b)(4)) 93

E. Grounds for Standing (37 C.F.R. §42.104) 93

F. Payment of Fees (37 C.F.R. §42.15(a)) 93

XI. CONCLUSION 94

TABLE OF AUTHORITIES

Page No(s).

Apple v. Fintiv,
IPR2020-00019, Paper 11 (PTAB Mar. 20, 2020) 91

Imperative Care v. Inari Medical, Inc.,
IPR2024-01157, Paper 5 (PTAB Oct. 29, 2024) 48, 52

KSR Int'l Co. v. Teleflex Inc.,
550 U.S. 398 (2007) ..... *passim*

In re Nilssen,
851 F.2d 1401 (Fed. Cir. 1988) 15

Phillips v. AWH Corp.,
415 F.3d 1303 (Fed. Cir. 2005) 11

Unwired Planet, LLC v. Google Inc.,
841 F.3d 995 (Fed. Cir. 2016) 15

OTHER AUTHORITIES

35 U.S.C. § 102 ..... 10, 14

35 U.S.C. § 103 14

37 C.F.R. §42.8 ..... 91, 92, 93

37 C.F.R. §42.15 93

37 C.F.R. § 42.24 95

37 C.F.R. §42.100 11

37 C.F.R. §42.104 93

LIST OF EXHIBITS

Exhibit No.	Description
1001	U.S. Patent No. 12,016,580 ("the '580 patent")
1002	'580 Patent Prosecution History
1003	Expert Declaration of Troy Thornton
1004	Resume of Troy Thornton
1005	WIPO Publication No. WO 2006/124307 A2 to Goff et al. ("Goff")
1006	U.S. Patent Publication No. 2015/0173782 A1 to Garrison et al. ("Garrison")
1007	U.S. Patent Publication US 2003/0225379 A1 to Schaffer et al. ("Schaffer")
1008	U.S. Patent Publication No. 2003/0116731 A1 to Hartley ("Hartley")
1009	U.S. Patent Publication No. 2015/0352325 A1 to Quick ("Quick")
1010	U.S. Patent Publication No. 2010/0042118 A1 to Garrison et al.
1011	U.S. Patent No. 8,734,374 B2 to Aklog et al. ("Aklog")
1012	U.S. Patent Publication No. 2017/0043066 A1 to Laub ("Laub")
1013	U.S. Patent No. 6,776,770 B2 to Trerotola ("Trerotola")
1014	U.S. Patent No. 5,938,645 to Gordon ("Gordon")
1015	U.S. Patent Publication No. 2014/0296868 A1 to Garrison et al.
1016	Certified File History of U.S. Patent Application 10/371,190 (Schaffer File History)
1017	U.S. Provisional Patent Application No. 62/554,931 (the "'931 application")

Exhibit No.	Description
1018	U.S. Patent No. 6,481,439 B1 to Lewis et al.
1019	U.S. Patent No. 5,256,150 to Quiachon et al.
1020	WIPO Publication No. WO 2018/019829 A1 to Brady et al. ("Brady")
1021	U.S. Patent No. 12,109,384 B2 to Merritt et al.
1022	Expert Declaration of Dr. Aquilla S. Turk, III, DO
1023	Resume of Dr. Aquilla Turk, III, D.O.
1024	Shani, Jacob M.D., et al., Mechanical Manipulation of Thrombus: Coronary Thrombectomy, Intracoronary Clot Displacement, and Transcatheter Aspiration, 72 Am. J. Cardiol. 116G-118G (1993)
1025	Bose, A et al., The Penumbra System: A Mechanical Device for the Treatment of Acute Stroke due to Thromboembolism, 29 Am. J. Neuroradiol. 1409-1413 (Aug. 2008)
1026	Turk, Aquilla S. et al., Initial clinical experience with the ADAPT technique: A direct aspiration first pass technique for stroke thrombectomy, 6 J. NeuroIntervent. Surg. 231-237 (2014)
1027	Turk, Aquilla S. et al., ADAPT FAST study: a direct aspiration first pass technique for acute stroke thrombectomy, 6 J. NeuroIntervent. Surg. 260-264 (2014)
1028	April 24, 2024 Letter from Inari to Imperative Care
1029	Turk, Aquilla S. et al., Aspiration thrombectomy versus stent retriever thrombectomy as first-line approach for large vessel occlusion (COMPASS): a multicentre, randomized, open label, blinded outcome, non-inferiority trial, 393 Lancet 998-1008 (March 2019)
1030	Save, Jeffrey L., Time is Brain – Quantified, American Heart Association Journals, available at http://www.stokeaha.org (2005).

Exhibit No.	Description
1031	Decision Granting Institution of IPR, IPR2024-01157, U.S. Patent No. 11,697,011 B2
1032	Decision Granting Institution of IPR, IPR2025-00156, U.S. Patent No. 11,697,012 B2
1033	Decision Granting Institution of IPR, IPR2025-00289, U.S. Patent No. 11,554,005 B2
1034	Merriam-Webster's Collegiate Dictionary – Previously Submitted by Patent Owner as Ex. 2002 in IPR2024-00289 – Definition of "Loosen"
1035	U.S. Patent No. 7,998,104 B2 to Chang
1036	U.S. Patent No. 8,157,760 B2 to Craido et al.
1037	Plaintiff Inari's Supplemental Preliminary Disclosure of Asserted Claims and Infringement Contentions Pursuant to Patent Local Rules 3-1 and 3-2 in *Inari Medical, Inc. v. Imperative Care, Inc.,* 5:24-cv-03117-EKL (N.D. Cal.)
1038	Case Management and Scheduling Order (Dkt. #54) in *Inari Medical, Inc. v. Imperative Care, Inc.,* 5:24-cv-03117-EKL (N.D. Cal.)
1039	Imperative Care, Inc.'s Notice of Motion and Motion to Stay Pending *Inter Partes* Review in *Inari Medical, Inc. v. Imperative Care, Inc.,* 5:24-cv-03117-EKL (N.D. Cal.)
1040	Order Regarding Case Schedule and Motion to Stay in *Inari Medical, Inc. v. Imperative Care, Inc.,* 5:24-cv-03117-EKL (N.D. Cal.)

Petitioner Imperative Care, Inc. ("Petitioner") requests *inter partes* review ("IPR") of claims 1, 5-6, 9-30, and 33-34 ("the challenged claims") of U.S. Patent No. 12,016,580 ("the '580 patent," Ex. 1001), which is assigned to Inari Medical, Inc. ("Patent Owner" or "PO").

I. INTRODUCTION

Patent Owner has asserted claims 1, 5-6, 9-30, and 33-34 of the '580 patent against Petitioner in the co-pending district court litigation (the "Litigation"). (*See* Ex. 1037 (PO's infringement contentions).) The '580 Patent recently issued, and the Litigation is in its early stages with no trial date being set. (Ex. 1038 (setting schedule to only claim construction).) The Court also recently vacated the existing claim construction schedule and indicated it may set a new case schedule after hearing argument on Petitioner's motion to stay the Litigation pending resolution of the IPRs. (Ex. 1040.) Given the early stage of the Litigation, Petitioner challenges the patentability of the asserted claims in this IPR.

The accumulation of unwanted material, such as blood clots, in a patient's vasculature can cause serious conditions, including stroke and death. Over the last several decades, medical device companies have developed methods and devices to remove such clot material from the vasculature, including catheter-based systems that aspirate (i.e., suction) the clot material from the blood vessel.

The ’580 patent claims methods of treating clot material, as do several other patents assigned to PO and challenged in pending IPRs. (*Infra* §X.B.) The ’580 patent alleges that “there exists a need for an improved embolic extraction device” and argues that prior-art systems were “highly complex,” “cause trauma to the treatment vessel,” and “may not completely capture and/or collect all of the clot material.” (Ex. 1001, 2:30-54.) Yet, the ’580 patent does not explain how the claimed system addresses these alleged shortcomings. The ’580 patent also asserts that with “many” prior-art systems, “it is difficult or not possible to make repeated attempts at removing clot material (e.g., to make multiple passes with a device).” (*Id.*, 2:44-46.) The ’580 patent alleges that the described system allows for “repeatedly deploying an interventional device[.]” (*Id.*, 1:24-27.)

The prior art, however, already described methods of repeatedly deploying a clot treatment system having the conventional components described in the challenged claims (e.g., catheter, pressure source, hemostasis valve, filter). For example, **Garrison**, a prior-art patent application published in June 2015, describes an aspiration system for removing unwanted material from a patient’s vasculature. As illustrated below, Garrison’s aspiration system includes the conventional components listed in the challenged claims: a pressure source (e.g., pump or syringe) [red], elongated shaft (e.g., catheter) [orange and pink], filter [blue], attachment member having a hemostasis valve [yellow], and a fluid control device [purple]:

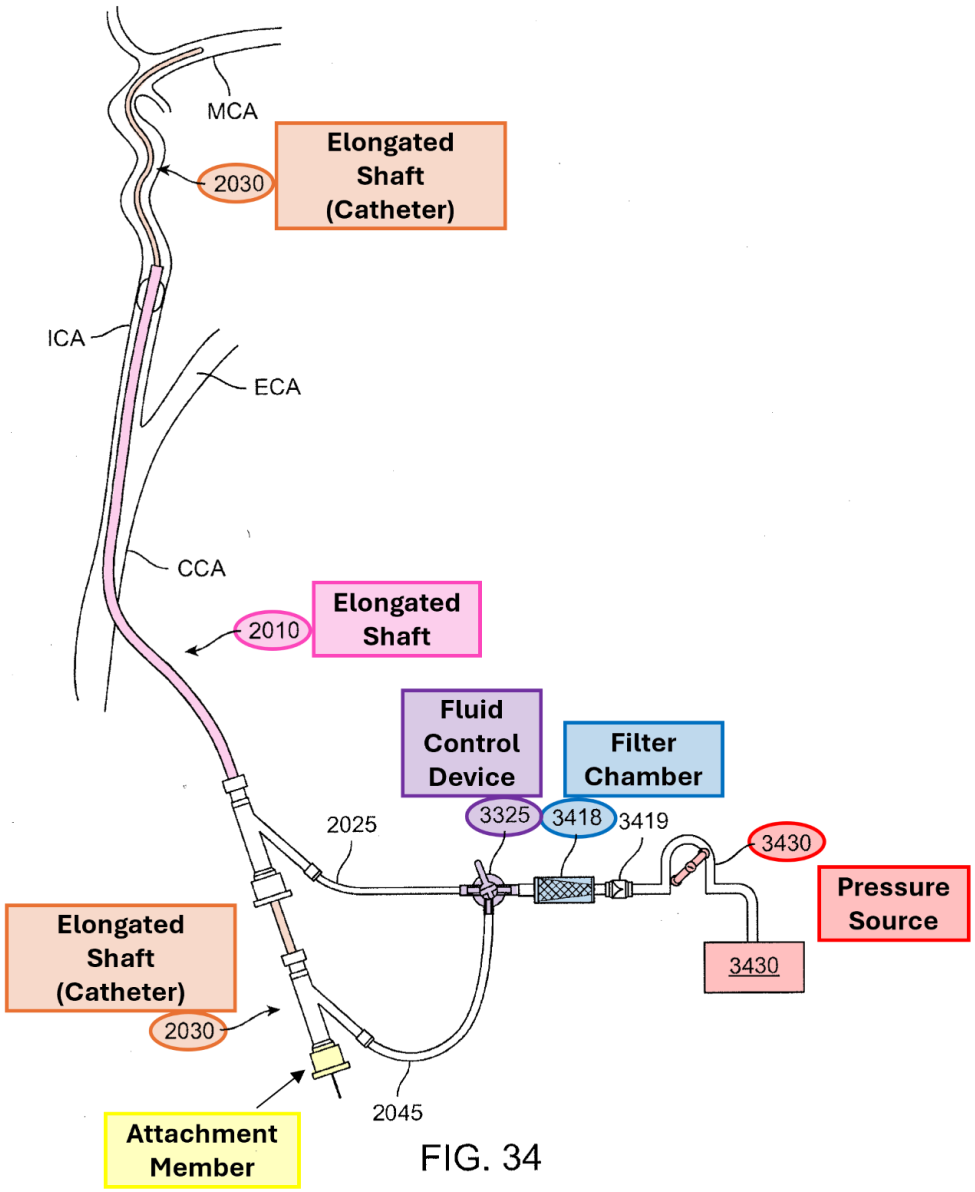

(Ex. 1006, Fig. 34.)

The Patent Trial and Appeal Board ("Board") recently instituted an IPR filed by Petitioner against a patent claiming similar components, including a "catheter," "on-off control," "clot cannister," and "hemostasis valve." (Ex. 1033 at 28-32.) In that IPR, the Board preliminarily determined that Garrison and Schaffer disclose these conventional components. (*Id.*)

Garrison also discloses methods of repeatedly deploying an interventional device to remove multiple clot portions. For example, Garrison describes the steps of removing a first clot and then, "if a secondary more distal treatment site needs to be reached ***after removal of a first occlusion***, a second, smaller diameter catheter may be inserted through the first catheter, and positioned at the distal treatment site." (Ex. 1006, [0166] (emphasis added).) Garrison also describes methods and devices for breaking up a clot within a blood vessel to aspirate portions of the clot. (*Id.*, [0126].) As demonstrated herein, Garrison anticipates or renders obvious the challenged claims.

PO listed Garrison on an Invention Disclosure Statement ("IDS") during prosecution of the '580 patent along with hundreds of other references. The Examiner issued a single office action that did not apply or discuss Garrison. In allowing the challenged claims, the Examiner concluded that the closest reference "fails to disclose the step of pre-charging a vacuum in a pressure source and fluidly connecting the pressure source to the elongated shaft to apply the pre-charged vacuum to the elongated shaft to aspirate a first portion of the clot material into the elongated shaft." (Ex. 1002, 1050.)

Yet, Garrison discloses this precise step. Garrison describes pre-charging a vacuum in a syringe (pressure source) connected to the aspiration catheter (elongated shaft) by pulling back the plunger on the syringe "while the connection to the flow

line is closed[.]" (Ex. 1006, [0134].) Garrison further discloses that when the tip of the aspiration catheter (elongated shaft) is positioned near the clot, "the user may open the connection to the aspiration syringe," which "would enable the maximum level of aspiration in a rapid fashion with one user[.]" (*Id.*) The Examiner overlooked this disclosure in Garrison and, thus, erred in allowing the challenged claims.

As demonstrated above and below, the challenged claims merely recite methods of using known clot treatment systems and known catheter components according to their conventional functions to predictably aspirate clots. *KSR Int'l Co. v. Teleflex Inc.,* 550 U.S. 398, 416 (2007). Thus, the prior art grounds identified in this Petition show a reasonable likelihood that one or more claims of the '580 patent are unpatentable. Accordingly, Petitioner requests that the Board institute this IPR to reconsider the patentability of the '580 patent.

II. THE '580 PATENT

A. Overview

The '580 patent describes a retrieval system for engaging and removing clot material from a blood vessel. (Ex. 1001, 3:46-49.) The '580 patent alleges that the system can treat various clots, including pulmonary embolisms ("PE") and cerebral embolisms. (*Id.,* 3:64-4:3.) The retrieval system comprises "clot retrieval system 1" including "retraction and aspiration device 100 ('RA device 100')," "catheter

system 200," and "tubing system 300." (*Id.,* 4:42-49.) The '580 patent explains that in some embodiments, "catheter system 200" may comprise a "guide catheter 206" and "delivery sheath 204," which "individually comprise an elongated shaft" [orange]. (*Id.*, 5:4-13.) The system also includes an "attachment/valve member 208" [yellow] that can "secure the catheter 200 to the RA device 100" and "can fluidly couple an aspiration lumen of the catheter system 200 […] to the tubing system 300":

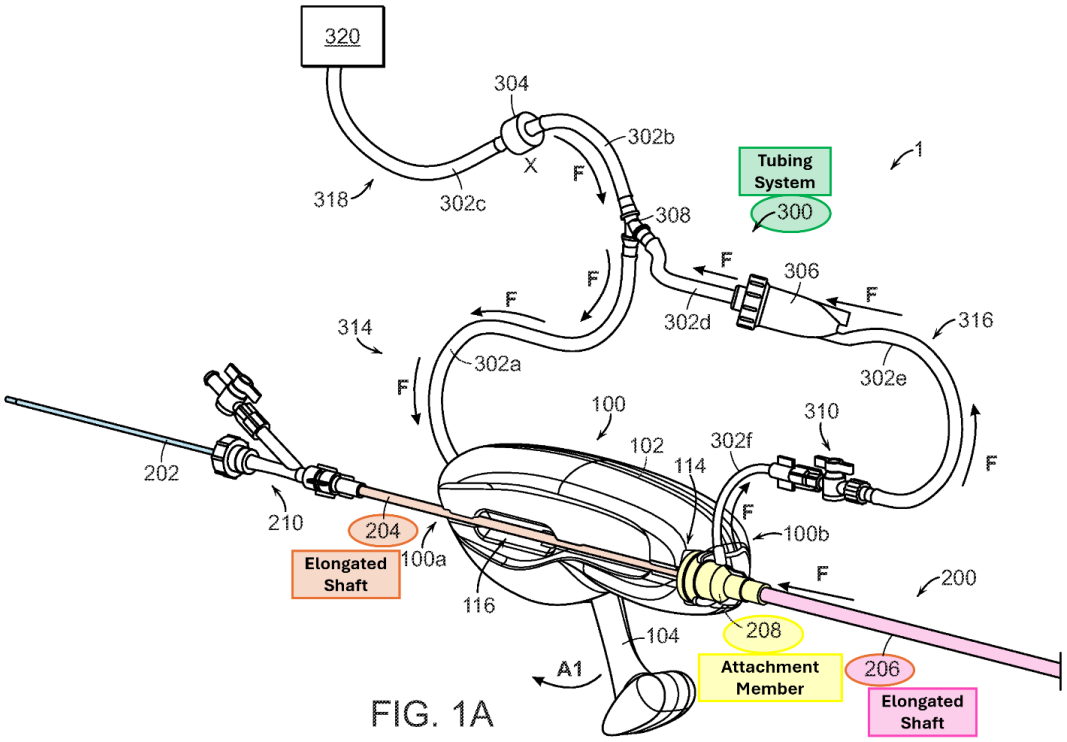

FIG. 1A

(*Id.,* 5:4-6:18; Fig. 1A)

The '580 patent also states that "an interventional device ID, such as a clot removal and/or clot treatment device" [blue] can be "housed within delivery sheath 204 [orange]" and "positioned at least partially within the clot material PE" [pink]:

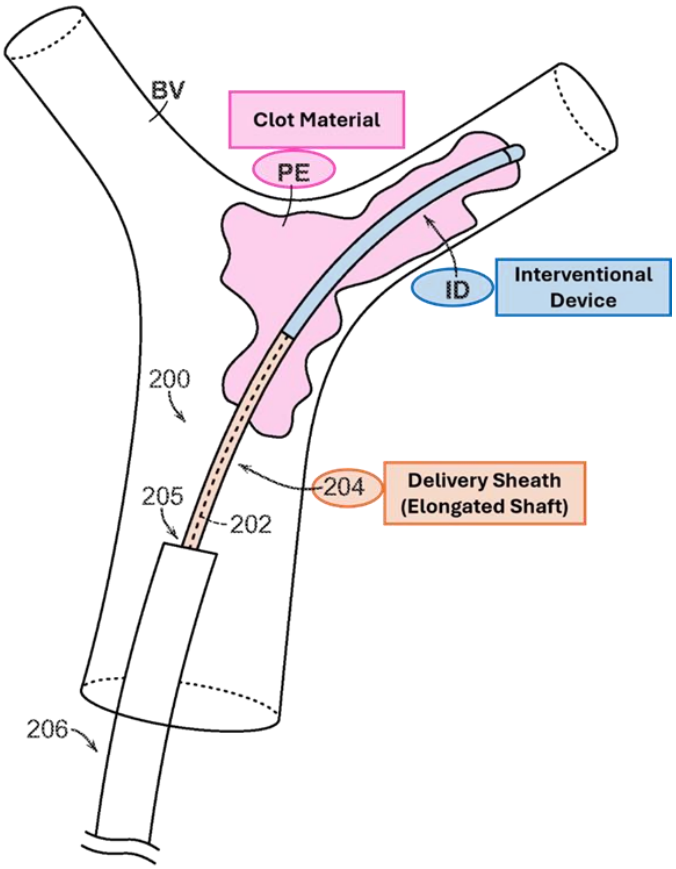

FIG. 2A

(*Id.,* 5:18-27; Fig. 2A)

The ’580 patent explains “tubing system 300 of the clot retrieval system 1 fluidly couples the pressure source of the RA device 100 to the aspiration lumen of the catheter system 200.” (*Id.,* 6:49-51.) The tubing system 300 can comprise a “first portion 314” [red] coupled to a pressure source, and a “second portion 316” [green]. (*Id.*, 6:49-59.) Second portion 316 comprises “clot reservoir 306” [blue] and “second fluid control unit 310” [purple] which may “be a stopcock or a clamp

that is externally operated to regulate the flow of liquid through the second portion 316 of the tubing system 300.”:

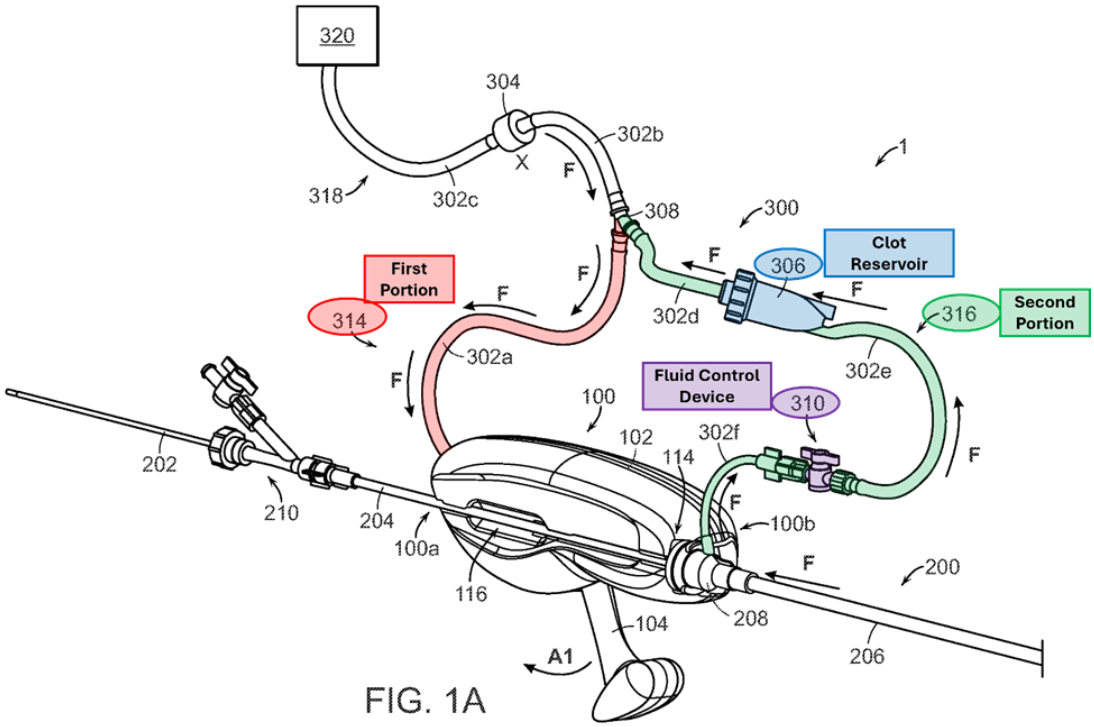

FIG. 1A

(*Id.,* 7:15-19, Fig. 1A.)

The ’580 patent further explains “clot reservoir 306 includes a housing 322” [blue] and “a filter 321 [brown] configured to be positioned within the housing 322”:

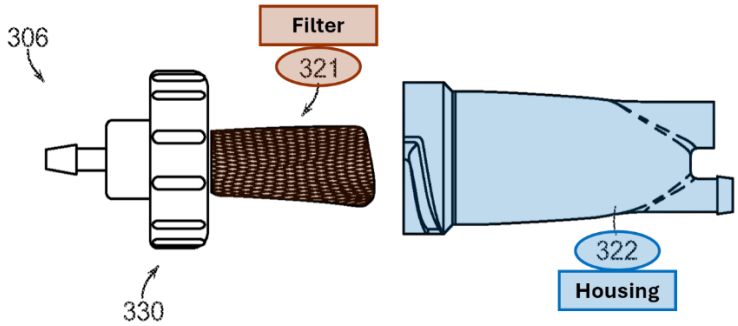

FIG. 3C

(*Id.,* 8:61-67; Fig. 3C.)

The ’580 patent explains that the attachment member “can be, for example, a hemostasis valve configured to maintain hemostasis […] as the delivery sheath 204, […] and/or other components of the catheter system 200 are inserted through the valve 445.” (*Id.,* 10:3-11:5; Fig. 7A.) The ’580 patent describes a valve having a “tubular member (e.g., an elongate member) 1372” that extends through the valve. (*Id.,* 18:5-8.) The tubular member has a “thin-walled compliant tubular structure” that facilitates “the uniform collapse of the tubular member 1372 and the sealing of the tubular member 1372”:

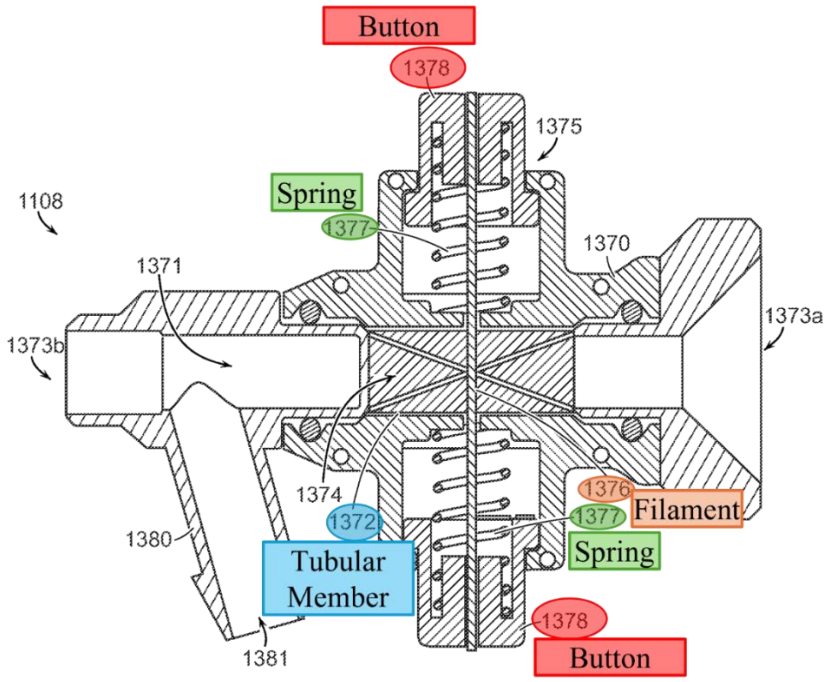

FIG. 13A

(*Id.*, 18:8-14, Fig. 19.)

The valve also includes an “actuation mechanism 1375” that can “collapse and seal the tubular member 1372 via compression and/or constriction of one or

more filaments 1376[.]" (*Id.*, 18:15-20.) The actuation mechanism "can be a manual actuator such as one or several buttons 1378." (*Id.*, 18:21-23.) The "actuation mechanism 1375 can tighten the filament 1376 to constrict or compress the tubular member 1372 to seal the central lumen 1374 of the tubular member 1372." (*Id.*, 18:35-40.) The valve also includes a "bias feature," such as a spring, that biases the actuator toward the open or closed configuration. (*Id.*, 18:32-35.)

B. <u>Prosecution History</u>

The Examiner issued a single, non-final rejection during prosecution. In the rejection, the Examiner allowed claims 21-31 and rejected claims 32-40. The Examiner found that Quick (US 20150352325, Ex. 1009) was the best reference and disclosed all the limitations of independent claim 21 [issuing claim 1] except the step of "pre-charging a vacuum in a pressure source and fluidly connecting the pressure source to the elongated shaft to apply the pre-charged vacuum to the elongated shaft to aspirate a first portion of the clot material into the elongated shaft." (Ex. 1002, 1050-1051.)

However, in the same Office Action, the Examiner rejected independent claim 32 under 35 U.S.C. § 102(a)(1) as being anticipated by Quick. (Ex. 1002, 1046-1047.) Rejected claim 32 was an apparatus claim having all the components required by allowed claim 21. The Examiner also concluded that Quick's device was configured to perform the steps recited in allowed claim 21 but allowed claim

21 because Quick did not expressly disclose the steps. (Ex. 1002, 1043-1051.) PO subsequently canceled claim 32 and the '580 patent issued.

C. Earliest Possible Priority Date

The '580 patent claims priority to a provisional application 62/622,691, filed January 26, 2018, which is the earliest possible priority date for the '580 patent. (Ex. 1001.) Petitioner applies this earliest priority date in this Petition but reserves its right to challenge the priority date in subsequent proceedings.

III. LEVEL OF ORDINARY SKILL

A POSITA in January 2018 would have had an undergraduate degree in mechanical engineering or a related engineering discipline and 2-4 years of catheter design experience and, where necessary, would have consulted with a physician regarding the methods of treatment. (Ex. 1003, ¶35.)

IV. CLAIM CONSTRUCTION

The claim terms should receive their ordinary and customary meaning as understood by a POSITA at the time of filing and in accordance with the specification and the prosecution history. 37 C.F.R. §42.100(b); *see Phillips v. AWH Corp.*, 415 F.3d 1303 (Fed. Cir. 2005). However, "the specification may reveal a special definition given to a claim term by the patentee that differs from the meaning it would otherwise possess [and i]n such cases, the inventor's lexicography governs." *Id.* at 1316.

Claims 15-17 of the '580 patent require a hemostasis valve having "a ***filament*** coupled to the button and the tubular member[.]" The Board has preliminarily addressed the construction of "filament" in three prior IPRS. (*See* Exs. 1031-1033; Ex. 1003, ¶¶53-59 (summarizing decisions).) The present claims reciting a "filament" most closely resemble the claims of the '011 Patent. In that IPR, the Board preliminarily determined that "filament" encompasses Petitioner's construction of at least "one or more threads, lines, cords, ropes, ribbons, flat wires, sheets, or tapes." (Ex. 1031, 13.) The Board also preliminarily rejected PO's argument that the Board should import the term "flexible" into "filament." (*Id.*, 15.)

The present claims are distinguishable from the claims in the '012 patent, which required the filament to form a "loop." (Ex. 1032, 15.) The Board preliminarily determined that the "loop" limitation required a "flexible" filament in the '012 patent claims. (*Id.*) The current claims do not require a loop but merely require pressing a button on the hemostasis valve "to loosen the filament." The term "loosen" merely means "to release from restraint," which may be accomplished with rigid or flexible filaments. (Ex. 1003, ¶72.)

Thus, the claim language does not provide a POSITA with guidance on the meaning of "filament." (*Id.*, ¶61.) Likewise, the '580 specification does not provide any further detail on the structure or materials of the "filament." (*Id.*, ¶62.) However, the '580 patent purports to incorporate by reference descriptions of

hemostasis valves having filaments from U.S. Provisional Patent Application No. 62/554,931.[1] (Ex. 1001, 17:49-55; hereinafter, the "'931 application", Ex. 1017.)

Like the '011 and '012 patents, the '931 application states, "the filament 150 can comprise one or several threads, lines, cords, rope, ribbon, flat wire, sheet, or tape." (Ex. 1017, [0046].) The application also states, "the filament can be made from a variety of materials including, for example, a polymer, a synthetic, and/or a metal." (*Id.*) The application further states, "the filament can comprise a single strand such as, for example, a monofilament, [or] the filament can comprise a plurality of strands that can be, for example, twisted, woven, grouped, and/or fused to form the filament." (*Id.*) Additionally, the '931 application explains that "the filament 150 can comprise multiple filaments, and specifically, as shown in FIGS. 7 through 9, the filament 150 can comprise a first filament 150-A and a second filament 150-B." (*Id.*, [0064].) Given these descriptions, a POSITA would have understood the claim term "filament" to mean at least "one or more threads, lines, cords, ropes, ribbons, flat wires, sheets, or tapes." (Ex. 1003, ¶¶60-66.)

Petitioner does not believe any other terms in the challenged claims require construction to resolve the patentability issues herein.

[1] Petitioner reserves its right to challenge in future proceedings whether PO has effectively incorporated by reference.

V. STATEMENT OF RELIEF REQUESTED

A. IPR Grounds

Petitioner asserts the following grounds of unpatentability:

Ground	Reference(s)	35 U.S.C.	Challenged Claims
1	Garrison	§102	1, 5, 9, 11-14, 18, 21-22, 24-28, 30, 33-34
2	Garrison	§103	1, 5, 9, 11-14, 18, 21-22, 24-28, 30, 33-34
3	Garrison and Schaffer	§103	1, 5-6, 9, 11-18, 21-30, 33-34
4	Garrison and Hartley	§103	1, 5, 9, 11-14, 18, 21-22, 24-28, 30, 33-34
5	Garrison, Schaffer, and Hartley	§103	15-17
6	Garrison and Goff	§103	18-22, 24-28
7	Garrison, Schaffer, and Goff	§103	18-29
8	Garrison, Hartley, and Goff	§103	18-22, 24-28
9	Garrison and Laub	§103	10
10	Garrison and Aklog	§103	10
11	Garrison, Laub, and Schaffer	§103	10
12	Garrison, Laub, and Hartley	§103	10
13	Garrison, Aklog, and Schaffer	§103	10
14	Garrison, Aklog, and Hartley	§103	10

The Petition is supported by the expert declaration of Troy Thornton. (Ex. 1003.)

B. The Asserted References Are Prior Art

The following references are prior art under at least 35 U.S.C. §102(a)(1):

(1) Goff (Ex. 1005) published November 23, 2006;

(2) Garrison (Ex. 1006) published June 25, 2015;

(3) Schaffer (Ex. 1007) published December 4, 2003;

(4) Hartley (Ex. 1008) published June 26, 2003;

(5) Aklog (Ex. 1011) issued May 27, 2014; and

(6) Laub (Ex. 1012) published February 16, 2017.

C. <u>The Asserted References Are Analogous Art</u>

The asserted references are analogous art that is usable in an obviousness combination. *Unwired Planet, LLC v. Google Inc.*, 841 F.3d 995, 1000 (Fed. Cir. 2016). The references are from the same field as the '580 patent, e.g., devices for aspirating unwanted material from a patient, and hemostasis valves for use during intravascular procedures. (Ex. 1003, ¶26.) The references are also pertinent to the problem the inventor was focused on, e.g., removing clots, emboli, and thrombi from a patient's blood vessel, and sealing a catheter during intravascular procedures to minimize blood leaks. (*Id.*) Accordingly, a POSITA is presumed to have been aware of these references and the teachings may be combined to support an obviousness rejection. *In re Nilssen*, 851 F.2d 1401, 1403 (Fed. Cir. 1988).

VI. GROUNDS 1-8: GARRISON ALONE OR COMBINED WITH HARTLEY, SCHAFFER, AND/OR GOFF RENDERS CLAIMS 1, 5-6, 9, 11-30, 33-34 UNPATENTABLE

A. Independent Claim 1

Claim 1 is anticipated by Garrison or rendered obvious by Garrison alone or combined with Hartley, Schaffer, and/or Goff. (Ex. 1003, ¶¶74-117.)

1. Preamble [1]: "A method for the intravascular treatment of clot material within a blood vessel"

If the preamble is limiting, Garrision discloses this limitation. (Ex. 1003, ¶¶74-76.) Garrison discloses systems and methods to intravascularly aspirate (i.e., suction) clot material from a patient's blood vessels. (Ex. 1006, abstract, [0007].) In Figure 34, for example, Garrison illustrates a clot treatment system having two intravascular aspiration catheters (2010 [pink] and 2030 [orange]) coupled to a pressure source [red]:

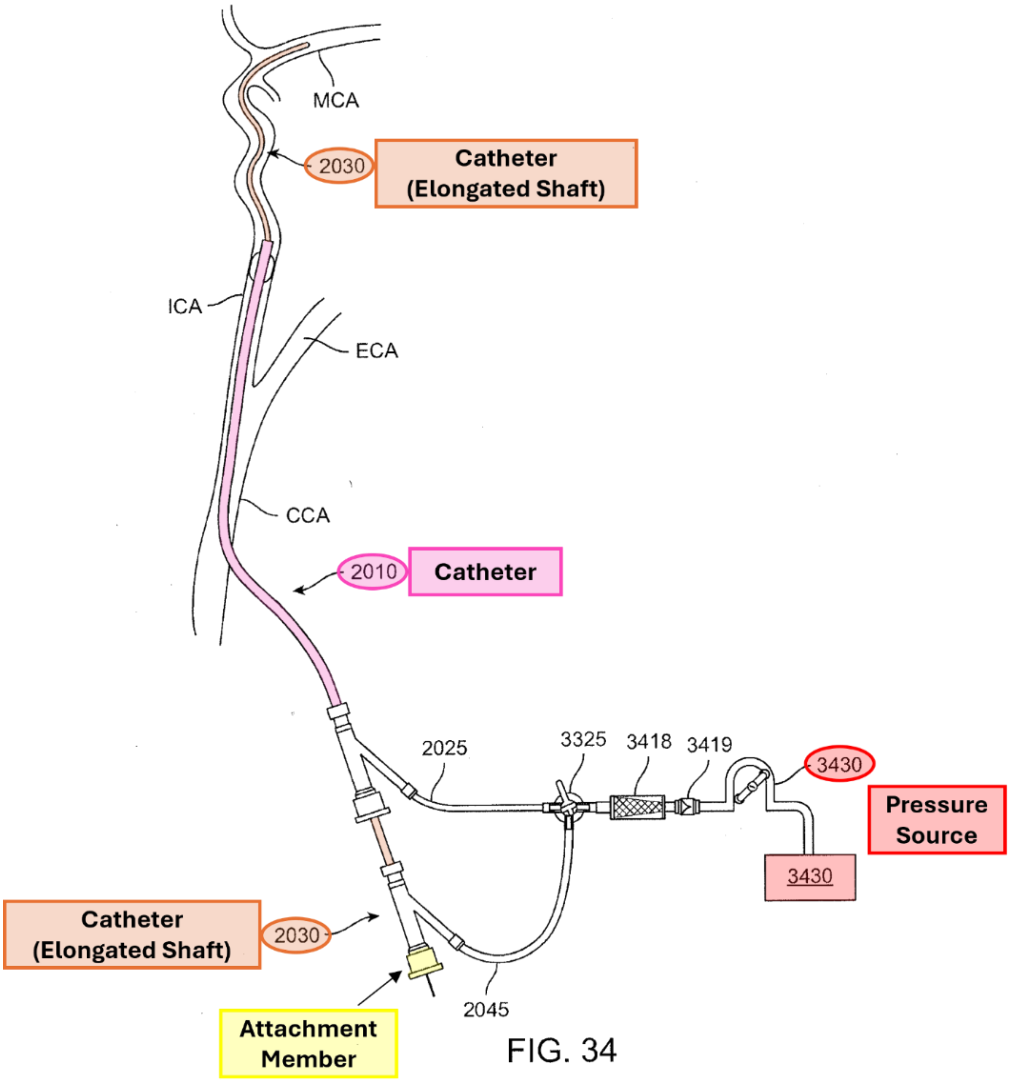

(*Id.*, Fig. 34, [0131]-[0134] (describing figures).)

Garrison's catheter "has an external dimension that is sized and shaped for insertion into a blood vessel" and "the catheter may be used to aspirate an occlusion in the blood vessel." (*Id.*, [0098], [0109], Fig. 34; *see also id.*, [0162]-[0167] (describing "exemplary methods of use").)

2. Limitation [1A]: "positioning a distal portion of an elongated shaft proximate to the clot material within the blood vessel"

Garrison discloses this limitation. (Ex. 1003, ¶¶77-79.) In Figure 2, for example, Garrison illustrates positioning the distal portion of aspiration catheter 2030 [orange] proximate to clot material 10 [pink] within the blood vessel:

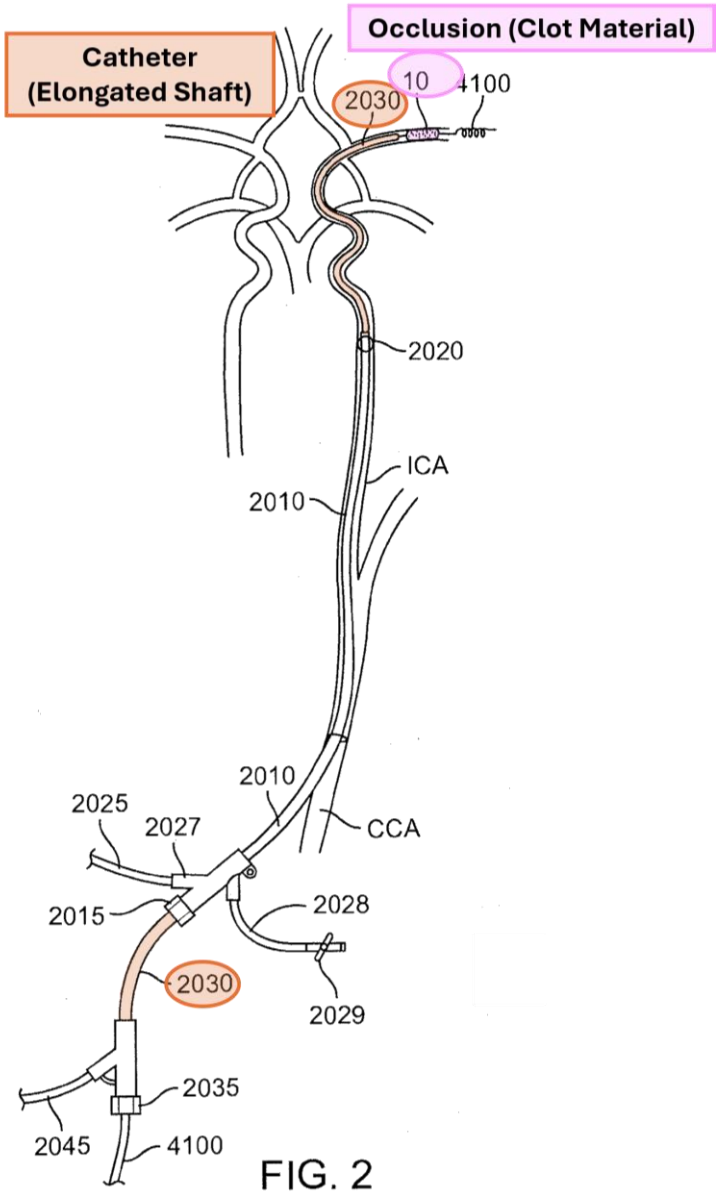

FIG. 2

(Ex. 1006, Fig. 2, [0050]-[0051]; *see also* Figs. 25A-25B, 26-28, 33, 35 (illustrating catheter 2030 positioned proximate clot).) Garrison discloses that "catheter 2030 is placed through the arterial access device 2010 or the guide catheter 2105 and positioned such that the distal tip reaches the treatment site." (*Id.*, [0164]; *see also id.,* [0111]-[0113].) Garrison also discloses positioning the tip of the aspiration catheter "near or at the face of the occlusion." (*Id.*, [0134].)

Catheter 2030 is "formed of an elongated catheter body" having a lumen and, therefore, is an "elongated shaft." (*See e.g., id.*, *abstract,* [0008], [0098], [0109]; Ex. 1003, ¶78.)

3. <u>Limitation [1B]: "pre-charging a vacuum in a pressure source"</u>

Garrison discloses this limitation. (Ex. 1003, ¶¶80-84.) Garrison's system includes a valve 3325 [purple] along the fluid path [green] between the aspiration source (pressure source) [red] and aspiration catheter (elongated shaft) [orange]:

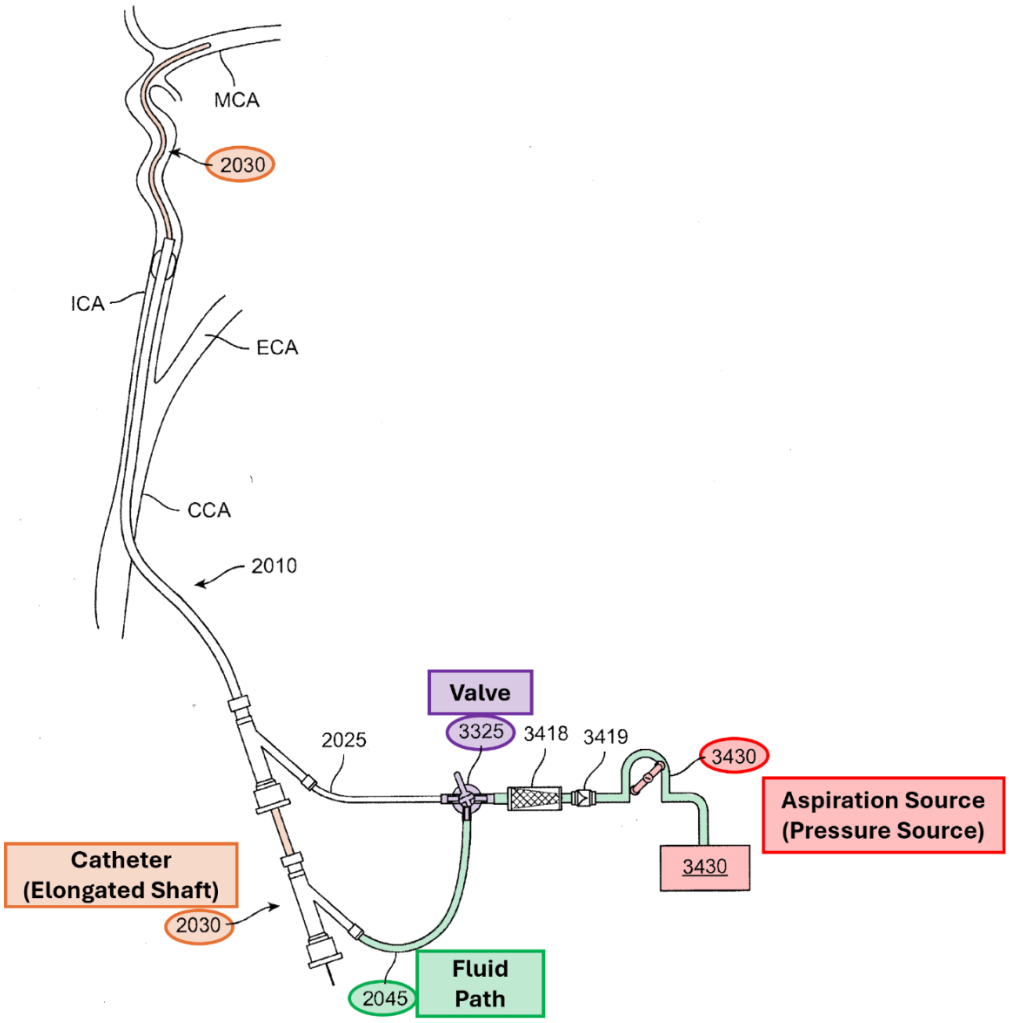

FIG. 34

(Ex. 1006, Fig. 34, [0131]-[0134].) Garrison's pressure source can be a syringe. (*Id.*, [0131]; *see also* [0071], [0129], [0134] (describing syringe as exemplary pressure source).)

Garrison's "valve 3325 controls which device [i.e., catheter 2010 or 2030] is connected to the aspiration source 3430." (*Id.*, [0132].) "The valve may be a 3-way or 4-way stopcock" or a "flow controller" and "enable[s] one device, the other device, both devices, or neither device to be connected to the aspiration source at

any given time." (*Id.*; *see also id.*, [0049] ("The system may include a flow controller, which allows the user to control the timing and mode of aspiration.").)

Garrison describes a specific example of pre-charging a vacuum in a pressure source with a system like the one in Figure 34. Garrison describes that "a locking syringe (for example a VacLok Syringe) is attached to the flow controller and the plunger is pulled back into a locked position by the user ***while the connection to the flow line is closed*** prior to the thrombectomy step of the procedure." (Ex. 1006, [0134] (emphasis added).) Pulling back the syringe while the connection (i.e., flow controller) is closed creates a vacuum within, and pre-charges, the chamber of the syringe (pressure source). (*Id.*; Ex. 1003, ¶83.)

Garrison describes a similar method of pre-charging a syringe with a stopcock to simulate aspiration and test flow rates through different catheters. Garrison explains that "each catheter was connected to a stopcock and thence to a 30 cc locking syringe." (Ex. 1006, [0129].) Once the tip of the catheter was placed in the test fluid, "the stopcock was closed" and the "locking syringe was then pulled back the full 30 cc volume and locked in place." (*Id.*) This step created a pre-charged vacuum within the syringe. (Ex. 1003, ¶83.) The stopcock was then opened to release the vacuum and create suction through the catheter. (Ex. 1006, [0129].) Thus, Garrison discloses this limitation.

4. Limitation [1C]: "fluidly connecting the pressure source to the elongated shaft to apply the pre-charged vacuum to the elongated shaft to aspirate a first portion of the clot material into the elongated shaft"

Garrison discloses this limitation. (Ex. 1003, ¶¶85-87.) Garrison discloses generating a negative pressure within (i.e., pre-charging) a syringe "while the connection [e.g., valve] to the flow line is closed prior to the thrombectomy step of the procedure." (Ex. 1006, [0134].) Garrison further discloses that "[d]uring the procedure when the tip of the aspiration device (either the arterial access device or the catheter) is near or at the face of the occlusion, the user may open the connection to the aspiration syringe." (*Id.*) Garrison explains that opening the valve after creating the pre-charged vacuum "would enable the maximum level of aspiration in a rapid fashion with one user …." (*Id.*) In other words, opening the valve applies the pre-charged vacuum to the catheter to aspirate a first portion of clot material into the catheter (elongated shaft). (Ex. 1003, ¶86; *see also* Ex. 1006, [0165]-[0166] describing method of use).)

Similarly, Garrison discloses a method of using the clot system to test the flow rate through various catheters. (*Supra* §VI.A.4.) Garrison describes closing a stopcock before pulling back the plunger on a locking syringe to pre-charge a vacuum in the syringe (i.e., pressure source). (Ex. 1006, [0129].) Garrison then discloses opening the stopcock to release the pre-charged vacuum and provide suction through the catheter. (*Id.*) Thus, Garrison discloses this limitation.

5. Limitation [1D]: "unsealing an attachment member coupled to a proximal portion of the elongated shaft"

a. Garrison

Garrison discloses this limitation or renders it obvious. (Ex. 1003, ¶¶88-106.) Garrison's catheter 2030 includes "a proximal hub 2065" that "has a female Luer configuration for attachment of a syringe during prep and attachment of other components." (Ex. 1006, [0098].) Thus, "proximal hub 2065" is an "attachment member" at least because it permits the attachment of other devices to the catheter and, as discussed below, can optionally include a hemostasis valve. (Ex. 1003, ¶89.)

Garrison discloses, as an example, that "a separate hemostasis valve may be attached to proximal hub 2065, to allow introduction of devices such as a microcatheter, guide wire, or thrombectomy device while preventing or minimizing blood loss during the procedure." (Ex. 1006, [0097].) "Alternately, the hemostasis valve may be integral to the catheter proximal adaptor." (*Id.*) Garrison discloses using different types of hemostasis valves with catheter 2030, including "an adjustable-opening valve such as a Tuohy-Borst or rotating hemostasis valve (RHV)." (*Id.*)

Garrison does not label hub/adaptor 2065 in the figures. However, similar hubs/adaptors (2012 and 2015) are labeled for the arterial access sheath 2010 and guide catheter 2105. (*Id.*, [0053], [0074].) For example, Figure 3 illustrates guide catheter 2105, which has a "proximal adaptor having a proximal port 2015 ***with a***

hemostasis valve to allow introduction of devices while preventing or minimizing blood loss during the procedure":

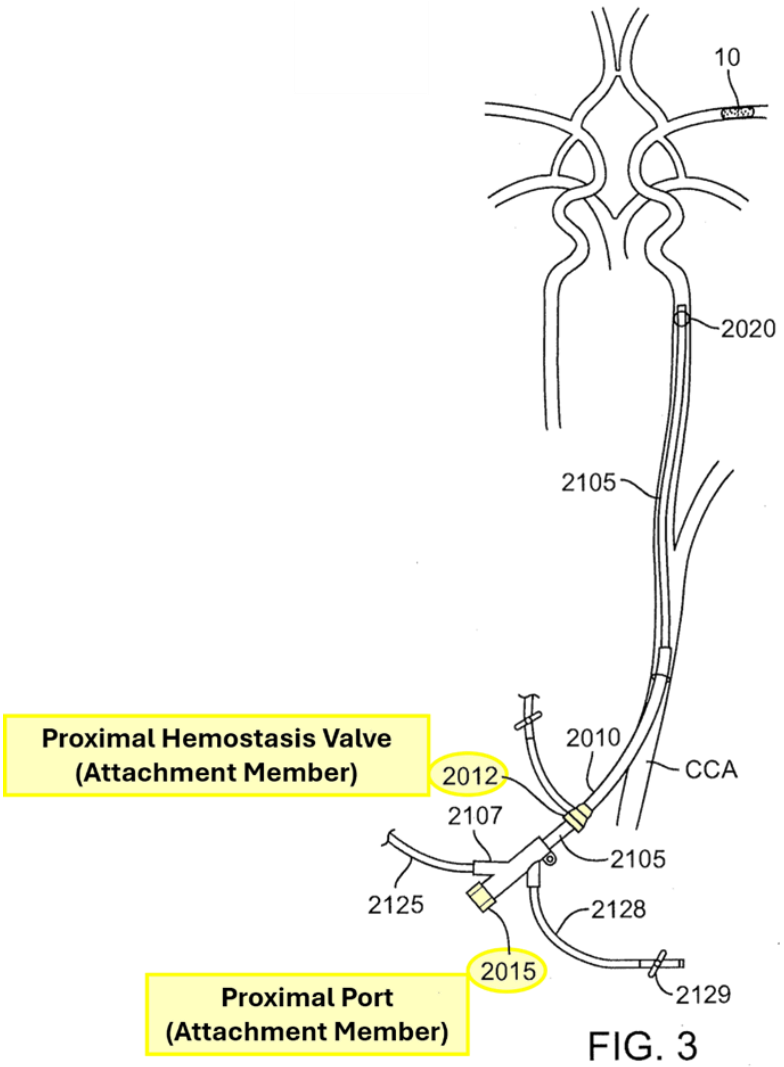

(*Id*., [0053] (emphasis added), Fig. 3; *see also id.*, [0050]-[0053], [0059], [0062], Figs. 1-3, 6 (describing hemostasis valve 2012).) A POSITA would have understood that catheter 2030's hemostasis valve is located at the end of the proximal hub/adaptor as in Figure 3 at least because that is the location where a user would insert other devices through the hub and where sealing would be necessary:

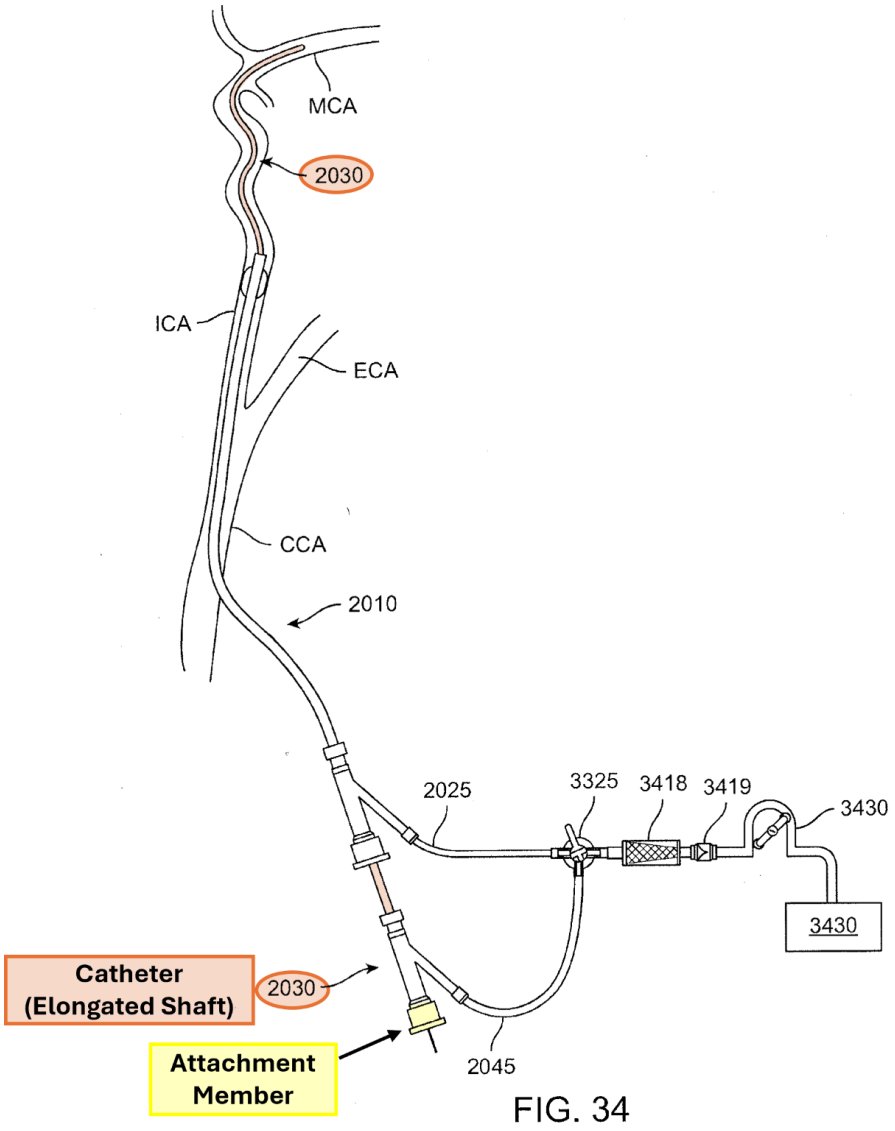

FIG. 34

(Ex. 1006, [0098], Fig. 34 (emphasis added); Ex. 1003, ¶92.)

As explained above, the hemostasis valve in Garrison's hub/adaptor permits the "introduction of devices such as a microcatheter, guide wire, or thrombectomy device." (Ex. 1006, [0098].) Garrison also discloses the valve may be "an adjustable-opening valve such as a Tuohy-Borst or rotating hemostasis valve (RHV)." (*Id.*) A POSITA would have understood, and found it obvious, that

introducing a device through an RHV would require first unsealing the valve. (Ex. 1003, ¶93.) Hartley, for example, discloses a rotating hemostasis valve that the user rotates to open the valve before inserting devices and reflects the general operation of an RHV. (Ex. 1008, [0034]-[0035], Figs. 1-4.)

Garrison also discloses a method of removing a first clot from a patient and, "if a secondary more distal treatment site needs to be reached after removal of a first occlusion, a second, smaller diameter catheter may be inserted through the first catheter, and positioned at the distal treatment site." (Ex. 1006, [0165]-[0166].) Again, in this example, a POSITA would have understood, and found it obvious, that the user would unseal the RHV to insert the second catheter because that is how RHVs work; a user could not insert a second catheter through a closed RHV. (Ex. 1003, ¶¶94-95.) Thus, Garrison discloses this limitation or renders it obvious.

b. <u>Garrison and Schaffer</u>

Schaffer discloses an adjustable-opening "fluid stasis valve" for use with catheters to prevent blood flow through the valve during medical procedures:

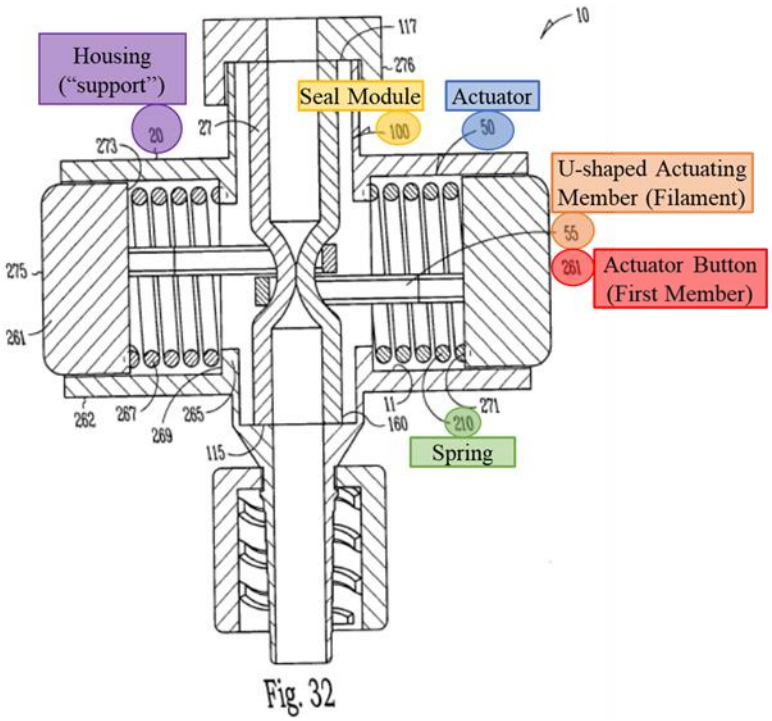

(Ex. 1007, [0002], [0046], [0055], Figs. 30-34.) Schaffer describes unsealing the valve to permit insertion of another device by pressing one or more of the valve's buttons. (*Id.*, [0077].) A POSITA would have been motivated, and found it obvious, to use Schaffer's valve as the hemostasis valve on Garrison's catheters (e.g., 2010 and 2030) for several reasons. (Ex. 1003, ¶¶96-101.)

First, Garrison describes combining "an adjustable-opening valve" with its catheters. (Ex. 1006, [0062], [0065], [0098].) Schaffer discloses an adjustable-opening valve and, therefore, a POSITA would have been motivated to combine, and reasonably expected success in combining, Schaffer's valve with Garrison based on Garrison's express suggestion to do so. (Ex. 1003, ¶97.)

Second, Schaffer discloses that its hemostasis valve is "for use with catheters" and "blocks the flow of gas or fluid completely and immediately with or without an instrument in place within the gas/fluid path." (Ex. 1007, [0002], [0008], [0047], [0049].) Schaffer also discloses inserting various instruments through the valve, such as "a catheter, guidewire, needle, or fiber." (*Id.*, [0056], [0074].) Thus, Schaffer's valve performs the stated function of Garrison's "hemostasis valve" — to "allow introduction of devices … while preventing or minimizing blood loss during the procedure." (Ex. 1006, [0098].) A POSITA would have been motivated to combine, and reasonably expected success in combining, Schaffer's valve with Garrison for this additional reason. (Ex. 1003, ¶98.)

Third, POSITAs would have recognized that Schaffer's valve could simplify the operation of Garrison's clot treatment system. (*Id.*, ¶99.) For example, Schaffer's springs bias the valve toward the closed position, eliminating the need to manually seal the valve during procedures as in some prior-art valves. (*Id.*)

Fourth, the combination of Schaffer's valve with Garrison's system merely entailed the combination of known elements (Schaffer's valve and catheter 2030) according to known methods (attaching the valve to a catheter's proximal hub or forming it integrally with the hub) to yield the predictable result of minimizing blood loss through the catheter. *See KSR*, 550 U.S. at 416; (Ex. 1003, ¶100.)

Fifth, POSITAs in January 2018 had a finite number of predictable hemostasis valves to choose, including an "adjustable-opening valve" and an RHV. (Ex. 1003, ¶101.) A POSITA would have found it obvious to try any of the known hemostasis valves with Garrison's catheter 2030. (*Id.*); *KSR*, 550 U.S. at 417. The known valves, like Schaffer's adjustable-opening hemostasis valve, were simple mechanical structures that operate in a predictable way. (Ex. 1003, ¶101.) For this additional reason, POSITAs would have reasonably expected success in combining Schaffer's valve with Garrison's catheters. (*Id.*)

Thus, Garrison combined with Schaffer renders this limitation obvious.

c. <u>Garrison and Hartley</u>

Garrison combined with Hartley also renders this limitation obvious. (Ex. 1003, ¶¶102-106.) Hartley discloses a type of RHV that "can be controlled to vary the size of the aperture through the valve and be flexible so that a seal may be formed against an instrument or other object inserted through the access valve." (Ex. 1008, [0004].) Hartley's RHV includes a "cylindrical housing 6 into which is received a cylindrical elastomeric diaphragm 8 … [that] defines a cylindrical aperture 3 therethrough":

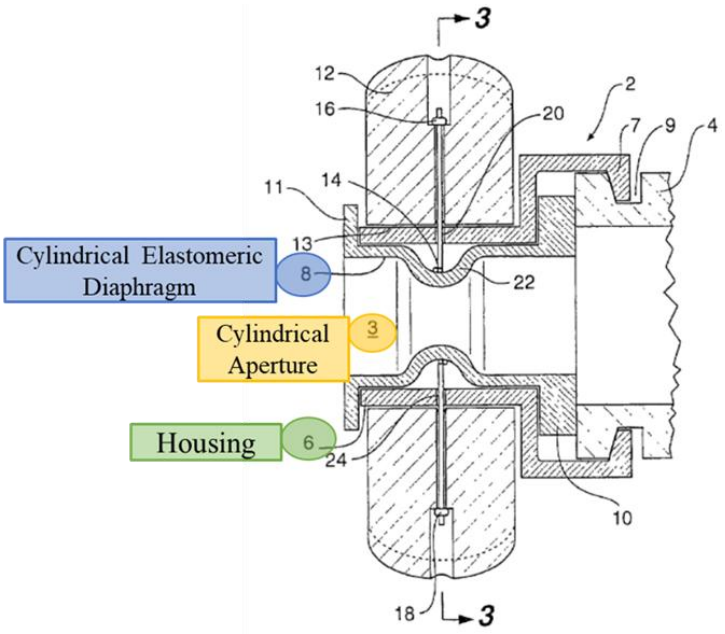

Fig 1

(*Id*., [0031], Fig. 1.) Hartley also explains that the "cylindrical diaphragm can be completely constricted to prevent fluid flow through the valve or can be constricted to the extent that it closes around an instrument, for instance a catheter, passed through the valve." (*Id.*, [0006].) The user unseals Hartley's valve to insert an instrument by rotating the valve. (*Id.*, [0034]-[0035].)

A POSITA would have been motivated to combine Hartley's hemostasis valve with Garrison's system, and reasonably expected success in doing so, for several reasons. (Ex. 1003, ¶¶103-106.) First, Garrison expressly suggests combining catheters 2010 and 2030 with an "RHV." (Ex. 1006, [0062], [0098].) Hartley discloses an RHV and, therefore, a POSITA would have been motivated to combine, and reasonably expected success in combining, Hartley's valve with Garrison based on this explicit suggestion. (Ex. 1003, ¶104.)

Second, combining Hartley's valve with Garrison's catheters merely entailed combining known elements (Hartley's hemostasis valve and Garrison's catheters) according to known methods (attaching the valve to a proximal hub on the catheter or forming it integrally with the hub) to yield the predictable result of reducing leakage through the valve. *KSR,* 550 U.S. at 416. Catheters having hemostasis valves were ubiquitous in the art before January 2018, as were the procedures to combine hemostasis valves and catheters. (Ex. 1003, ¶105.) A POSITA would have encountered various types of hemostasis valves during their education and career and would have known how the valves operate. (*Id.*) The prior-art valves, like Hartley's valve, are simple mechanical structures that operate in a predictable manner and would have been obvious to combine with Garrison's catheters. (*Id.*)

Third, a POSITA in January 2018 had a finite number of predictable hemostasis valves to select when trying to seal a catheter. (*Id.*, ¶106; *supra* §VI.A.5.b.) A POSITA would have found it obvious to try any of these hemostasis valves in combination with Garrison's catheters (e.g., 2010 and 2030). (Ex. 1003, ¶106.) Moreover, the known hemostasis valves, including Hartley's RHV, were simple mechanical structures that operate in a predictable way. For this additional reason, a POSITA would have reasonably expected success in combining any of the well-known valves with Garrison's catheters. (*Id.*)

Thus, Garrison combined with Hartley renders this limitation obvious.

6. Limitation [1E]: "advancing an interventional device distally through the attachment member and the elongated shaft"

Garrison discloses this limitation. (Ex. 1003, ¶¶107-111) Garrison's catheter 2030 may "provide distal access for ***additional devices***, localized fluid or contrast delivery, or localized aspiration at a location distal of the distal-most end of the arterial access device 2010." (Ex. 1006, [0054] (emphasis added).) Garrison discloses that "[if] the catheter is unable to reach the treatment site, or if a secondary more distal treatment site needs to be reached after removal of a first occlusion, a second, smaller diameter catheter may be inserted through the first catheter, and positioned at the distal treatment site." (*Id.*, [0166].)

Catheter 2030's proximal hub 2065 may "allow introduction of devices such as a microcatheter, guide wire, or thrombectomy device". (*Id.*, [0098].) Each of these devices is an "interventional device." (Ex. 1003, ¶109.) The "thrombectomy devices," for example, may include "coil-tipped retrievers, stent retrievers, expandable cages, wire or filament loops, graspers, brushes, or the like." (Ex. 1006, [0144]-[0145].) As shown below in Fig. 2, Garrison illustrates a thrombectomy device 4100 (interventional device) [blue] advanced distally through the attachment member [yellow] of catheter 2030 (elongated shaft) [orange] to engage the thrombus 10 (clot material) [pink] in a blood vessel:

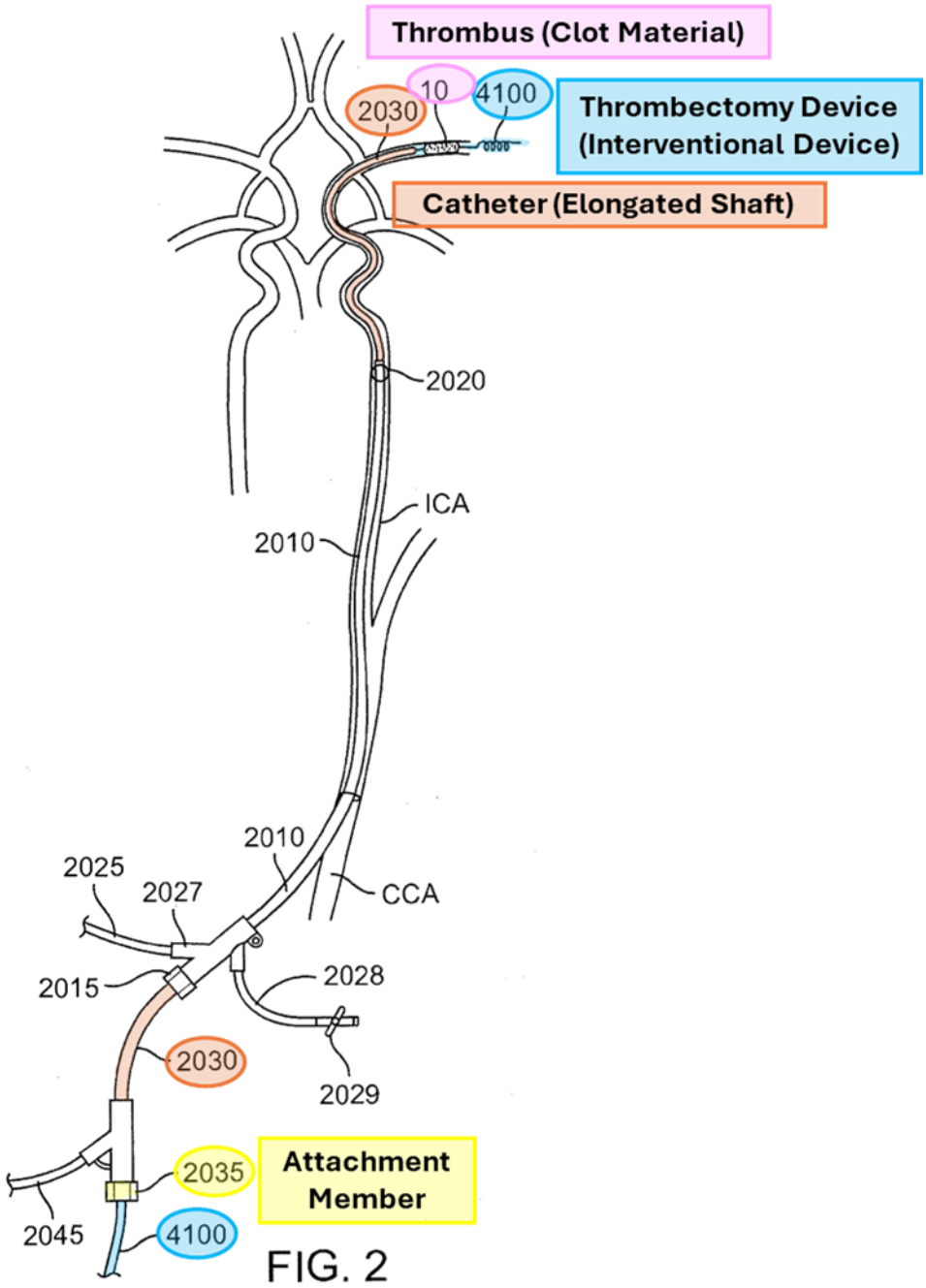

(*Id.*, [0056]; Fig. 2.)

Likewise, Garrison's Figure 33 illustrates an interventional device [blue] advanced distally through the attachment member [yellow] of the catheter 2030 (elongated shaft) [orange] so the distal end is near the clot material [pink]:

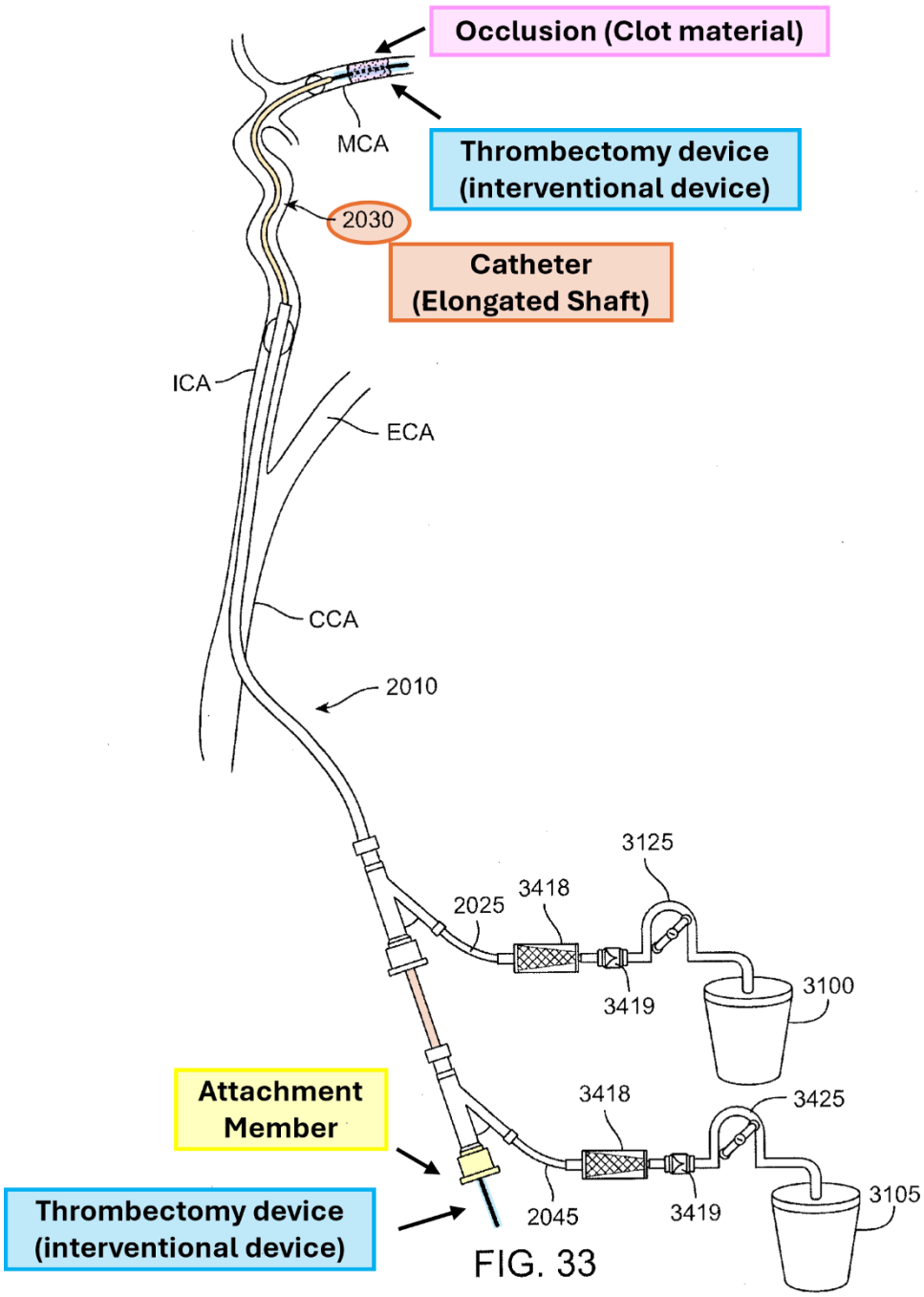

(Ex. 1006, Fig. 33, [0131]; *see also e.g., id.*, Fig. 2, [0050]-[0051].) Thus, Garrison discloses this limitation.

7. Limitation [1F]: "engaging the interventional device with a second portion of the clot material remaining in the blood vessel"

Garrison describes this step. (Ex. 1003, ¶¶112-117.) For example, Garrison discloses that "if a secondary more distal treatment site needs to be reached ***after removal of a first occlusion***, a second, smaller diameter catheter may be inserted through the first catheter, and positioned at the distal treatment site." (Ex. 1006, [0166] (emphasis added).) Thus, Garrison describes aspirating a first clot through catheter 2030 and then using catheter 2030 "to deliver additional catheters and/or interventional devices to the site of the occlusion." (*Id.*, [0054]; *supra* §VI.A.6; Ex. 1003, ¶113.) Garrison discloses many interventional devices including, for example, an expandable member deliverable through a microcatheter that can remove portions of a clot. (Ex. 1006, [0143].) Thus, Garrison describes engaging an interventional device with a second portion of clot material.

Moreover, Garrison solves the very problem the '580 patent purportedly addresses - deploying separate devices to remove a clot. For example, Garrison explains that "aspiration with current catheter designs is limited and often requires multiple attempts and/or adjunct mechanical thrombectomy devices, thus diminishing the time and reduced distal emboli benefits." (Ex. 1006, [0046].) To resolve this problem, Garrison incorporates accessory devices, such as thrombectomy device 4100, into the system. (*Id.*, [0056].) Garrison discloses that the user can deploy these devices after aspirating a first clot portion. (*Id.*, [0166].)

Garrison also incorporates disruption devices to break up the clot during aspiration. (*Id.*, [0125]-[0126].) Garrison describes aspirating a clot and, "if and when the clot becomes stuck in the lumen of the catheter," engaging the disruption device with the clot to aspirate additional portions of the clot. (*Id.*) Thus, Garrison describes several integrated assemblies.

Moreover, if the Board concludes Garrison does not disclose this limitation, Garrison renders the limitation obvious. (Ex. 1003, ¶¶115-117.) As discussed above, Garrison describes aspirating a first clot portion using catheter 2030 before inserting a smaller catheter to remove a second clot portion. (Ex. 1006, [0166].) Garrison also describes inserting various interventional devices through smaller catheters to capture or break up clots. (*See e.g., id.*, [0143]-[0144] (describing interventional devices), [0125]-[0126] (describing morcellating devices).)

A POSITA would have been motivated to engage an interventional device with a second clot portion based on Garrison. (Ex. 1003, ¶116.) For example, Garrison explains that the clot may be "too large or too strongly embedded into the vasculature such that it is not possible to remove the occlusion via aspiration alone, [such that] further steps are taken to remove the occlusion." (Ex. 1006, [0165].) Garrison expressly discloses deploying a thrombectomy device to remove such clots. (*Id.*) Based on this disclosure, a POSITA would have been motivated to engage the

interventional device inserted through catheter 2030 with the second clot portion. (Ex. 1003, ¶116.)

Further, a POSITA would have expected success in inserting an interventional device through catheter 2030 to remove a second clot portion. (*Id.*, ¶117.) Garrison discloses that catheter 2030 may be used "to deliver additional catheters and/or interventional devices to the site of the occlusion." (Ex. 1006, [0054].) Similarly, Garrison discloses that the proximal hub 2065 on catheter 2030 may "allow introduction of devices such a microcatheter, guide wire, or thrombectomy device". (*Id.*, [0098].) Garrison expressly discloses delivering interventional devices through a microcatheter. (*Id.*, [0143], Fig. 39.) Thus, a POSITA would have reasonably expected success in delivering such a device through catheter 2030. (Ex. 1003, ¶117.)

For at least these reasons, Garrison anticipates claim 1 or renders it obvious alone or combined with Schaffer or Hartley.

B. <u>Claim 5</u>

Claim 5 depends from Claim 1 and recites: "wherein unsealing the attachment member includes exercising a valve of the attachment member such that a lumen of the attachment member has a diameter that is about equal to an inner diameter of the elongated shaft." Garrison anticipates Claim 5 or renders it obvious alone or combined with Schaffer or Hartley. (Ex. 1003, ¶¶118-123.)

Garrison discloses that the diameters of the inner catheters/interventional devices closely match the inner diameters of the outer catheters. In Figure 34, for example, the outer diameter of catheter 2030 approximates the inner diameter of catheter 2010:

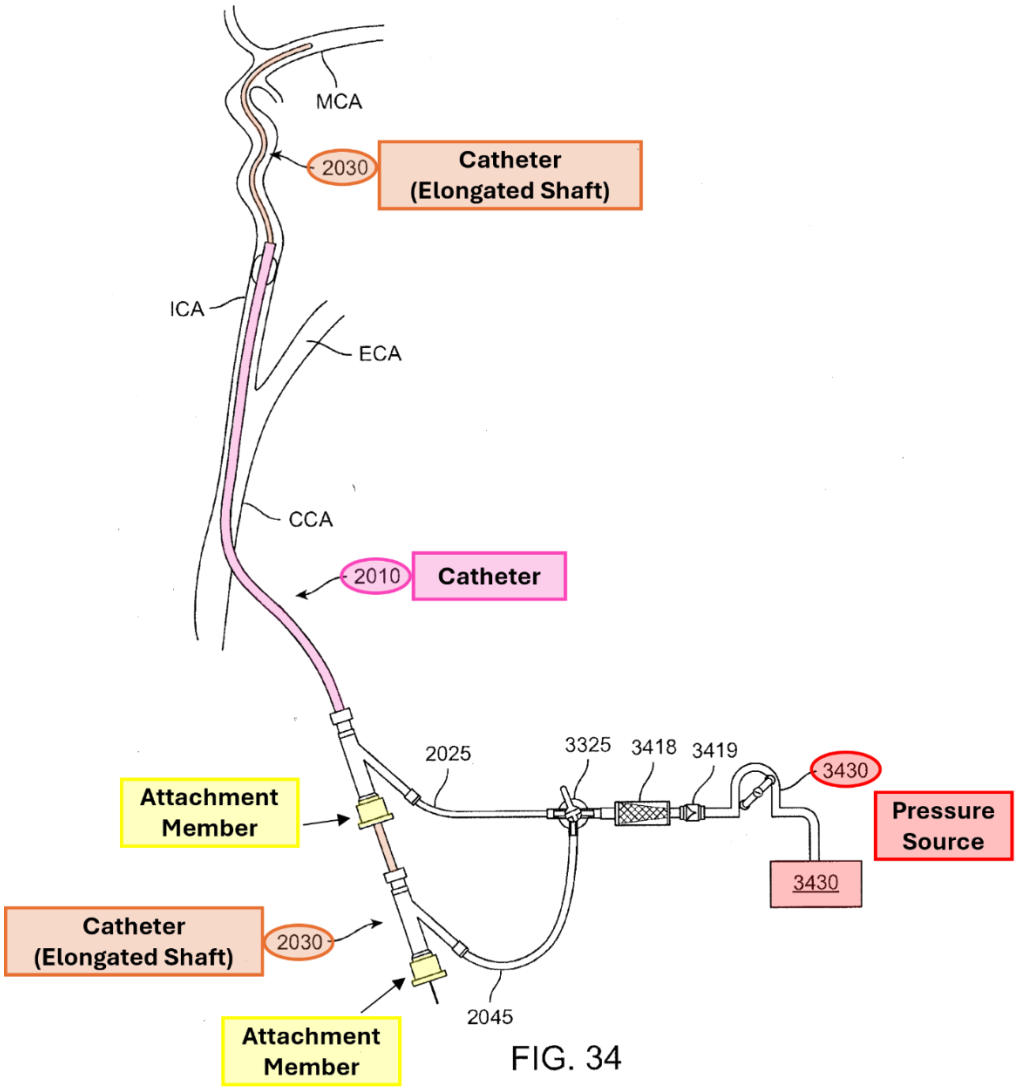

(Ex. 1006, Fig. 34.) Consistent with the illustration, Garrison provides exemplary catheter sizes for different embodiments where the inner diameter of the outer catheter closely approximates the outer diameter of the inner catheter. (*See id.,*

[0124] (describing outer catheter having inner diameter 0.086" to 0.088" and inner catheter having outer diameter of 0.083" to 0.086").) Garrison also explains that a mismatch in size between the telescoping catheters can cause "difficulty in advancing catheters through severe bends and across side branches[.]" (*Id.*, [0112].)

The hemostasis valve in the attachment member must open to a diameter at least as large as the catheter/device going through it. (Ex. 1003, ¶120.) If this did not happen, the catheter/device would not fit through the valve and/or the friction forces to advance the catheter/device would be unreasonably high. (*Id.*) Thus, Garrison inherently discloses opening the valve so that a lumen of the attachment member has a diameter that is about equal to an inner diameter of the elongated shaft (e.g., catheter 2030) because the catheter/device going through Garrison's valves approximate the inner diameter of the elongated shaft. (*Id.*)

Garrison also renders this limitation obvious. (*Id.*, ¶121.) Because the diameter of Garrison's inner catheters/devices approximate the diameters of the outer catheters, a POSITA would have found it obvious to open the valve so that a lumen of the attachment member has a diameter that is about equal to an inner diameter of the elongated shaft. (*Id.*) As explained above, if the valve were not opened to a diameter at least as large as the diameter of the catheter/device going through it, the catheter/device would not fit or would create unnecessarily high friction forces. (*Id.*) Thus, a POSITA would have been motivated to, and reasonably

expected success in, opening the valve so that a lumen of the attachment member has a diameter that is about equal to an inner diameter of the elongated shaft to ease insertion of devices through the valve. (*Id.*)

Additionally, Garrison combined with Schaffer or Hartley renders this claim obvious. (Ex. 1003, ¶¶122-123.) Schaffer illustrates a hemostasis valve where the diameter of the unsealed valve lumen is about equal to the inner diameter of the elongated shaft:

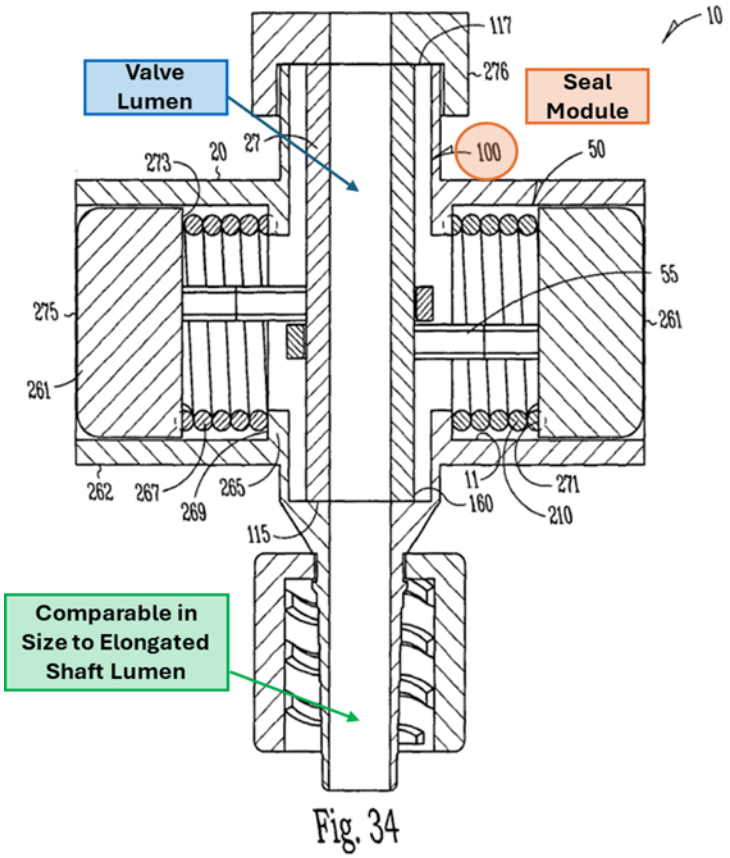

Fig. 34

(Ex. 1007, Fig. 34.) A POSITA would have been motivated to adopt a similar configuration when combining Schaffer with Garrison to ease insertion of devices through Schaffer's valve. (Ex. 1003, ¶122.)

Similarly, Hartley illustrates a hemostasis valve in which the unsealed cylindrical aperture (lumen) has a diameter that is about equal to an inner diameter of the elongated shaft:

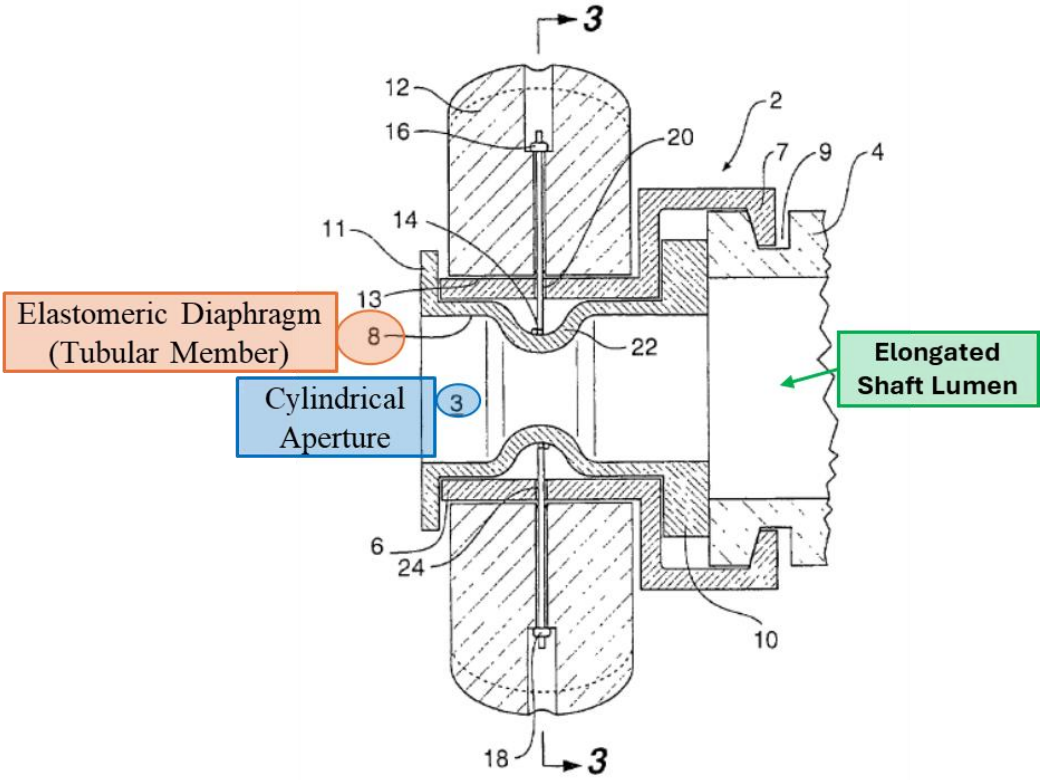

Fig 1

(Ex. 1008, Fig. 1.) A POSITA would have been motivated to adopt a similar configuration when combining Hartley with Garrison to ease insertion of devices through Hartley's valve. (Ex. 1003, ¶123.)

C. <u>Claim 6</u>

Claim 6 depends from Claim 1 and recites: "wherein unsealing the attachment member includes pressing one or more buttons on the attachment member." Garrison combined with Schaffer renders this claim obvious. (Ex. 1003, ¶¶124-

125.) Schaffer's valve includes two spring-loaded actuator buttons 261 "movable from a first position to a second position on opposing sides of the housing":

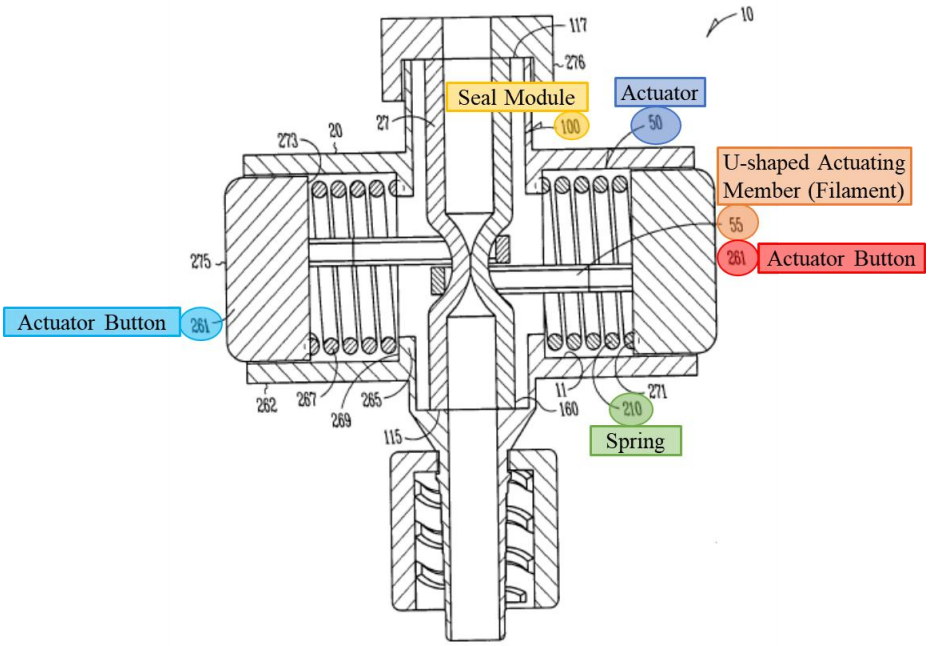

Fig. 32

(Ex. 1007, [0075]-[0076], Figs. 31-32.) When a user presses the buttons, Schaffer's valve moves from a sealed position to an unsealed position:

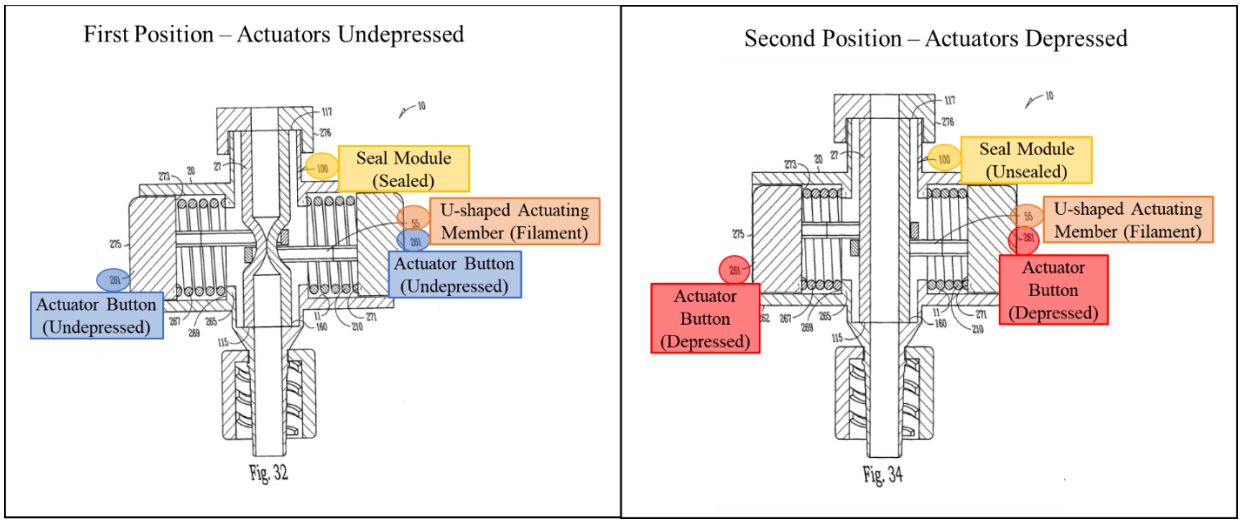

(*Id.*, [0077], Figs. 32, 34; Ex. 1003, ¶125.)

D. <u>Claim 9</u>

Claim 9 depends from Claim 1 and recites: "wherein fluidly connecting the pressure source to the elongated shaft to apply the pre-charged vacuum generates suction at the distal portion of the elongated shaft." Garrison discloses this limitation. (Ex. 1003, ¶¶126-127.)

Garrison describes an embodiment in which "a locking syringe (for example a VacLok Syringe) is attached to the flow controller and the plunger is pulled back into a locked position by the user ***while the connection to the flow line is closed*** prior to the thrombectomy step of the procedure." (Ex. 1006, [0134] (emphasis added).) Once the catheter is positioned near the thrombus, "the user may open the connection to the aspiration syringe" to "enable the maximum level of aspiration in a rapid fashion." (*Id.*) Because the clot is located at the distal end of the catheter (*see e.g., id.,* Figs. 2, 33), the pre-charged vacuum must generate suction at the distal portion of the elongate shaft, otherwise the system could not rapidly aspirate the clot. (Ex. 1003, ¶172.) Thus, Garrison discloses this limitation.

E. <u>Claim 11</u>

Claim 11 depends from Claim 1 and recites: "wherein the pressure source is fluidly coupled to the elongated shaft via a fluid control device, and wherein (a) opening of the fluid control device fluidly connects the pressure source to the elongated shaft and (b) closing of the fluid control device fluidly disconnects the

pressure source from the elongated shaft." Garrison discloses this limitation. (Ex. 1003, ¶¶128-130.)

The stopcock and flow controller discussed in connection with Garrison's Figure 34 are fluid control devices at least because they "control which device is connected to the pressure source." (Ex. 1006, [0132]; Ex. 1003, ¶129.) Garrison also explains that closing the stopcock or flow controller "may enable … neither [catheter] to be connected to the aspiration source at any given time." (Ex. 1006, [0132].)

As illustrated in Figure 34, the pressure source is fluidly coupled to the elongated shaft (catheter 2030) via the valve (fluid control device):

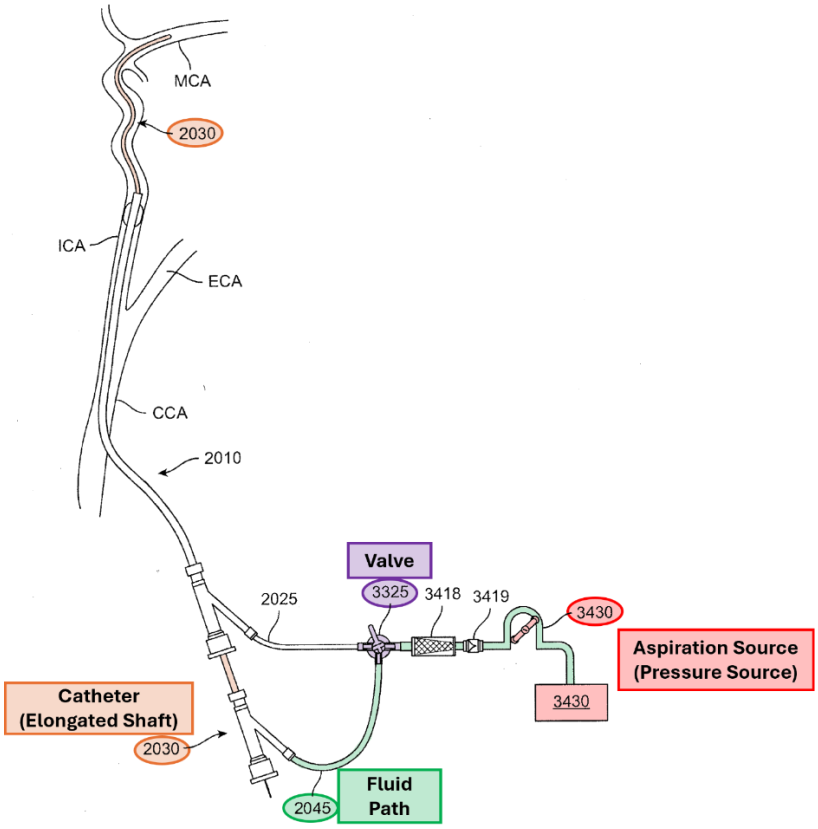

FIG. 34

(*Id.*, Fig. 34, [0131]-[0132].) Thus, Garrison discloses this limitation. (Ex. 1003, ¶130 *Supra* §§VI.A.4, VI.D.)

F. <u>Claim 12</u>

Claim 12 depends from Claim 11 and recites: "wherein pre-charging the vacuum in the pressure source includes activating the pressure source while the fluid control device is closed, and wherein fluidly connecting the pressure source to the elongated shaft includes opening the fluid control device." Garrison discloses these limitations for the reasons provided in Claims 1, 9, and 11. (*Supra* §§VI.A.3-5; §VI.D-E.)

G. <u>Claim 13</u>

Claim 13 depends from Claim 11 and recites: "wherein the fluid control device comprises a user-actuatable valve." Garrison's stopcock and flow controller are user-actuatable valves at least because the user must manipulate (e.g., twist or slide) the device to open and close the valve. (Ex. 1006, [0131]-[0134], Figs. 34-35; Ex. 1003, ¶132.)

H. <u>Claim 14</u>

Claim 14 depends from Claim 1 and recites: "wherein the attachment member comprises a hemostasis valve." Garrison discloses this limitation or renders it obvious alone or combined with Schaffer or Hartley for the reasons explained in Claim 1. (*Supra* §VI.A.5.)

I. Claim 15

Claim 15 depends from Claim 14 and recites: "wherein the hemostasis valve includes a tubular member, a button, and a filament coupled to the button and the tubular member, and wherein unsealing the hemostasis valve includes pressing the button to loosen the filament to allow the tubular member to expand." Garrison combined with Schaffer and optionally Hartley renders Claim 15 obvious. (Ex. 1003, ¶¶134-155.)

1. Tubular Member

Schaffer's hemostasis valve includes a "seal module 100" that comprises "a flexible, elongate tubular structure 101." (Ex. 1007, [0049], [0051], [0054], [0075].) The seal module 100 defines a lumen 193:

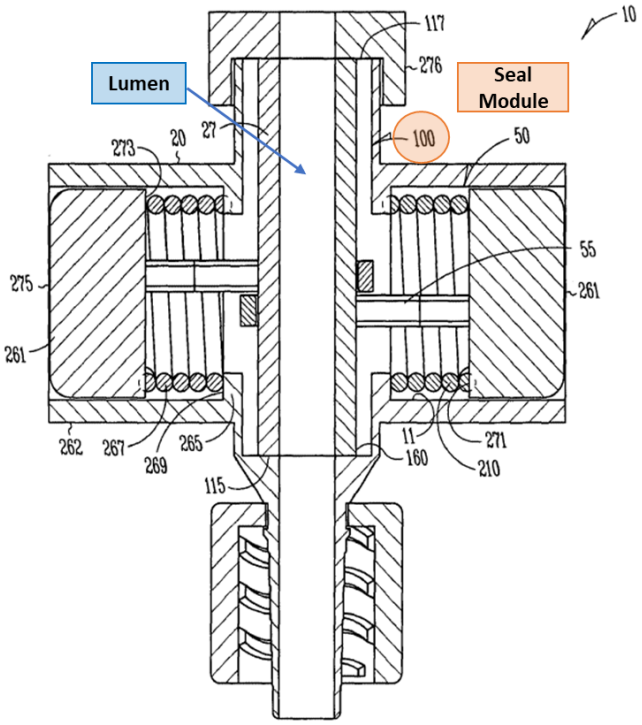

Fig. 34

(*Id.*, [0058], Figs. 12, 34.) Schaffer discloses that "a range of instruments [can be] used within the seal module," such as "a catheter, guidewire, needle, or fiber." (*Id.*, [0056].) Thus, Schaffer's seal module 100 is "a tubular member." (Ex. 1003, ¶135.)

2. <u>Filament</u>

a. <u>Schaffer</u>

Schaffer's valve includes two actuating members, which may be U-shaped, coupled to the actuator buttons:

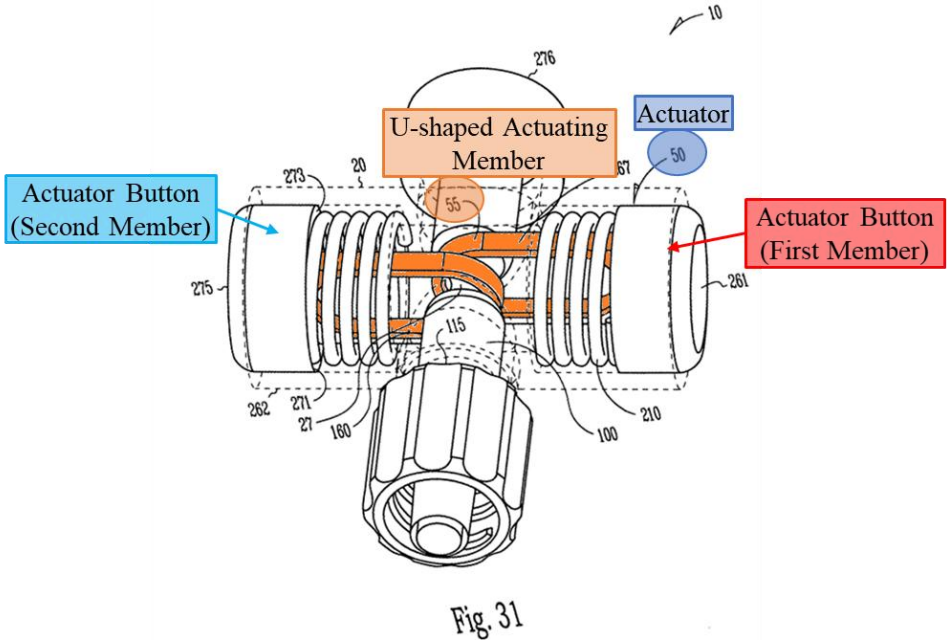

(Ex. 1007, [0076], Fig. 31.) Schaffer's actuating members are a "filament" as claimed in the '580 patent. (*Supra* §IV; Ex. 1003, ¶136.)

Schaffer's actuating members are formed from aluminum or plastic, and resemble a ribbon, flat wire, sheet, or tape. (Ex. 1007, [0081], Figs. 31-34; Ex. 1003, ¶137.) The '931 application states that the filament can be made from a polymer,

which includes Schaffer's plastic, or a metal, which includes Schaffer's aluminum. (*Supra* §IV.) Likewise, the '931 application states that a filament may be a ribbon, flat wire, sheet, or tape, which includes Schaffer's U-shaped actuating members. (*Id.*) In related proceedings, PO argued that Schaffer's actuating members are "rigid." *Imperative Care,* IPR2024-01157, Paper 5 at 28. However, Mr. Thornton explains why these arguments are inconsistent with Schaffer. (Ex. 1003, ¶¶138-140.)

Schaffer discloses that in a first position (below), the actuating members are "at least partially circumferentially disposed about the portion 108 of the seal module 100 depressing and at least partially collapsing a portion 108 of the containment structure 160 by a compressive force 67 (e.g. by a spring 210)":

First Position – Actuator Buttons Undepressed

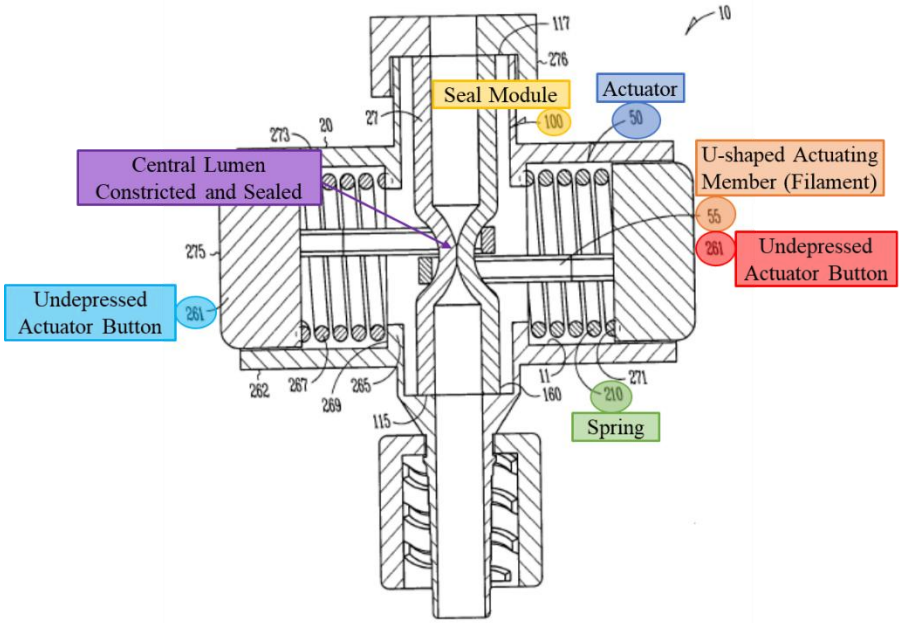

Fig. 32

(Ex. 1007, [0077], Fig. 32.) In a second position (below), the actuator buttons are pressed inwardly, compressing the springs to loosen the actuating members, allowing the seal module 100 to return to its uncollapsed/unsealed configuration so fluid can pass:

Second Position – Actuator Buttons Depressed

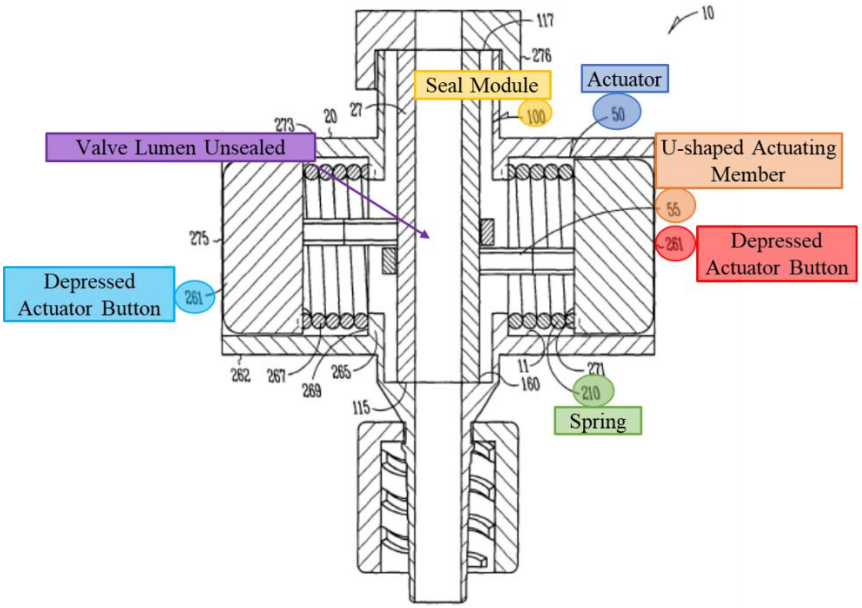

Fig. 34

(*Id*., [0077], Fig. 34.) Thus, Garrison combined with Schaffer renders this limitation obvious. (Ex. 1003, ¶142.)

b. <u>Schaffer and Hartley</u>

If Schaffer does not disclose a "filament," Hartley does. (Ex. 1003, ¶¶143-153.) Hartley describes a hemostasis valve having a "cylindrical elastomeric diaphragm," and a rotary actuator mounted to the housing:

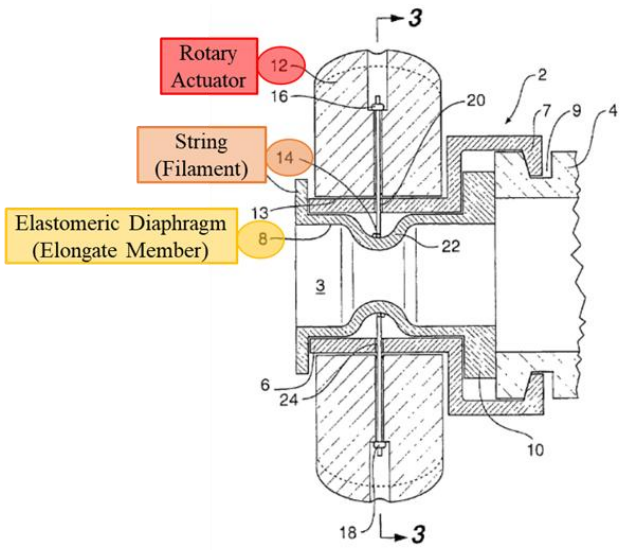

Fig 1

(Ex. 1008, [0031], Fig. 1.) Hartley's valve includes a "string 14 … mounted into the rotary actuator." (*Id.*) Hartley's string 14 is a "filament" because the string is made of at least one or more threads, lines, or cords. (Ex. 1003, ¶143.)

Hartley's string is secured to the rotary actuator via knots 16 at the ends of the filament and "is wound preferably twice around the cylindrical diaphragm 8":

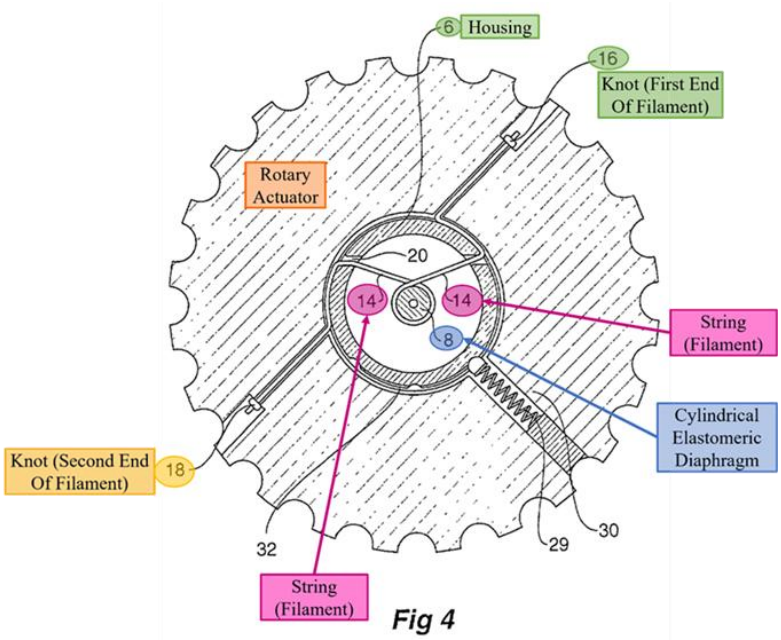

Fig 4

(Ex. 1008, [0031], Fig. 4.)

Hartley discloses that "[r]otation of the rotary actuator 12 with respect to the cylindrical housing 6 will cause the string 14 to be pulled in both directions at once and hence the cylindrical diaphragm 8 to be constricted." (Ex. 1008, [0031], [0034], Fig. 4.) Hartley further discloses the valve "will close over a range of diameters of devices passed through the valve or can close completely down to be self-sealing." (*Id.*, [0037].) Hartley also discloses that rotation of the valve in the opposite direction "will cause the sutures to loosen again so that the resilient cylindrical diaphragm will retain its original shape." (*Id.*, [0034].)

POSITAs would have found it obvious to substitute Hartley's string for Schaffer's actuating members in Schaffer's valve. (Ex. 1003, ¶¶146-153.) The combination of Hartley's string and Schaffer's valve merely entailed substitution of one known element (Hartley's string) for another (Schaffer's actuating members) to yield the predictable result of sealing Schaffer's valve. *KSR*, 550 U.S. at 416.

Hartley's disclosure that its string can "close over a range of diameters of devices passed through the valve or can close completely down to be self-sealing" would have further motivated POSITAs to substitute Hartley's string for Shaffer's actuating members. (Ex. 1008, [0037]; Ex. 1003, ¶147.) POSITAs would have recognized that Hartley's string may seal more effectively across a wider range of tool diameters and shapes than Schaffer's U-shaped actuating members. (Ex. 1003,

¶147.) Depending on the inserted tool, Schaffer's actuating members may form small gaps between the valve's seal module and the tool's outer surface:

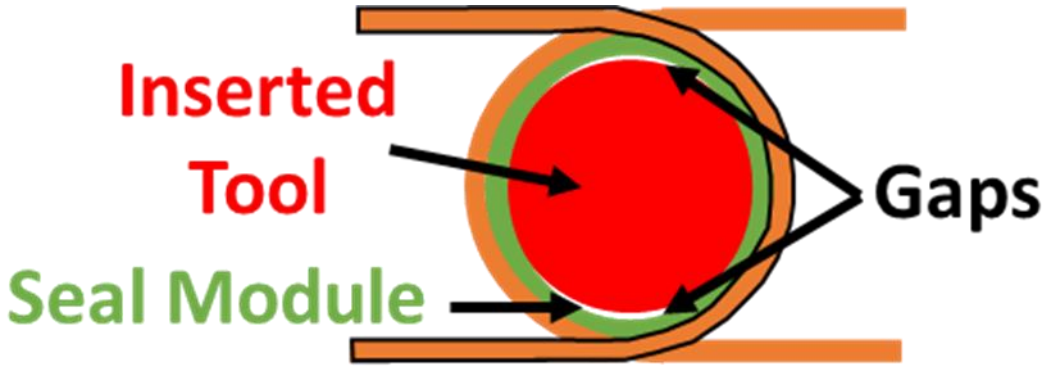

(*Id*.) Hartley's string would mitigate this potential issue because the string more precisely conforms to the tool diameters. (*Id*.) In related proceedings, PO argued that Schaffer's valve would not create gaps. *Imperative Care,* IPR2024-01157, Paper 5 at 28-29. However, Mr. Thornton explains why the portions of Schaffer cited by PO do not support PO's argument. (Ex. 1003, ¶148.)

POSITAs also had a finite number of materials to select from to constrict a tubular member in a hemostasis valve in January 2018. (*Id.*, ¶149.) Hartley and Schaffer disclose two such materials: Hartley's string and Schaffer's actuating members (which can be plastic or metal). (*Id.*) A POSITA would have found it obvious to select from these finite, predictable materials. (*Id.*); *KSR,* 550 U.S. at 421.

Likewise, POSITA's would have had a finite number of filament configurations to select from to constrict a tubular member in a hemostasis valve in

January 2018. (Ex. 1003, ¶150.) Hartley discloses a single string that wraps around the tubular member, while Schaffer discloses two u-shaped members that collective wrap around the tubular member. (*Id.*) A POSITA would have found it obvious to select either of these finite, predictable configurations. (*Id.*); *KSR,* 550 U.S. at 421.

POSITAs would have reasonably expected success in substituting Hartley's string for Schaffer's actuating members. (Ex. 1003, ¶¶146-153.) Hartley uses simple knots to attach the string to the rotary actuator. (Ex. 1008, [0031].) POSITAs would have reasonably expected that similar knots would secure Hartley's string to Schaffer's actuator buttons. (Ex. 1003, ¶151.) For example, each end of Hartley's string could be threaded through small holes in Schaffer's buttons and knotted on the other side. (*Id.*) This simple modification would have been within a POSITA's skills:

Demonstrative Illustration
Schaffer + Hartley's String

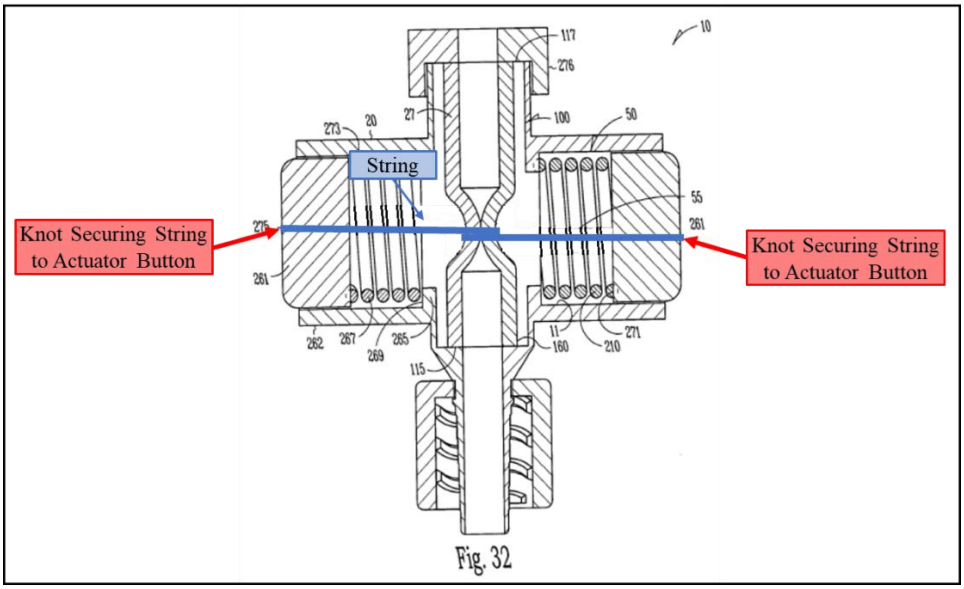

(*Id.*)[2]

Also, POSITAs would have recognized that Hartley's string and Schaffer's actuating members function similarly and, therefore, no other modifications to Schaffer's valve would have been necessary. (*Id.*, ¶152.) Both Hartley and Schaffer collapse a valve lumen by pulling the ends of the actuating members/string in opposite directions. (Ex. 1007, [0077]; Ex. 1008, [0031].) Thus, if Hartley's string were incorporated into Schaffer's valve, a POSITA would have reasonably expected Schaffer's buttons/springs to pull the string in opposite directions to constrict Schaffer's seal module. (*Id.*; Ex. 1003, ¶152.)

Likewise, POSITAs would have also reasonably expected that pressing Schaffer's buttons inwardly would release the tension on the string, allowing the lumen to open. (*See* Ex. 1007, [0077]; Ex. 1008, [0034]; Ex. 1003, ¶153.) Schaffer's seal module is formed from a "highly deformable, non-compressible material 166 (e.g., plastic)" and is "configured to maintain an open lumen 193 when no compressive force 67 is applied." (Ex. 1007, [0054].) Thus, Schaffer's seal module has the resilience to open when the tension on the string is released. Moreover, if the resiliency of Schaffer's lumen required adjustment to function with Hartley's string, a POSITA would have possessed the skills and knowledge to select an

[2] This image is a demonstrative prepared by Petitioner.

appropriate material with the proper resiliency. (Ex. 1003, ¶153.) Schaffer discloses various materials for the seal module. (Ex. 1007, [0081].)

Further, Hartley discloses that looping the string around the central lumen forms an effective seal. (Ex. 1008, [0031], [0037].) Thus, when replacing Schaffer's actuating members with Hartley's string, POSITAs would have been motivated to similarly loop Hartley's string around Schaffer's seal module. (Ex. 1003, ¶154.) POSITAs would have reasonably expected success in using this configuration because Hartley teaches the configuration forms an effective seal. (*Id.*)

3. Button

Schaffer discloses "pressing the button to loosen the filament to allow the tubular member to expand" as discussed in Claim 6. (*Supra* §VI.C.) Further, as discussed above, a POSITA would have reasonably expected that pressing Schaffer's buttons would loosen Hartley's string if it were substituted for Schaffer's actuating members. (*Supra* §VI.I.2.b.)

J. Claim 16

Claim 16 depends from Claim 15 and recites: "wherein the method further comprises, after at least partially advancing the interventional device distally through the hemostasis valve, releasing the button to tighten the filament to allow the tubular member to collapse and seal about a portion of the interventional device."

Garrison with Schaffer and optionally Hartley renders Claim 16 obvious. (Ex. 1003, ¶¶156-159.)

Schaffer's valve "blocks the flow of gas or fluid completely and immediately with or without an instrument in place within the gas/fluid path." (Ex. 1007, [0008].) Schaffer discloses that pressing the buttons loosens the actuating members to allow the seal module to expand and releasing the buttons constricts the seal module. (*Id.*, [0075]-[0077].) Thus, Schaffer discloses releasing the buttons to tighten the filament to allow the tubular member to collapse and seal about a portion of the interventional device. (Ex. 1003, ¶157.)

If Schaffer does not disclose this limitation, a POSITA would have found it obvious to release the buttons to tight the filament to allow the tubular member to collapse and seal about a portion of the interventional device. (Ex. 1003, ¶¶158-159.) Schaffer's valve is intended to prevent the flow of gas or fluid through the valve. (Ex. 1007, [0008].) Once an interventional device is positioned through the valve, a POSITA would have been motivated to release the buttons to close the valve tightly around the device to prevent leaks. (Ex. 1003, ¶158.) Additionally, a POSITA would have been motivated to release the buttons to free up the user's hands for other parts of the procedure. (*Id.*) A POSITA would have reasonably expected success in releasing the buttons because that is how Schaffer's valve is intended to operate. (*Id.*)

Hartley's valve is also designed to seal around an instrument inserted through the valve. (Ex. 1008, [0003].) Hartley discloses that the valve "can be constricted around the device to prevent loss of blood or inflation gas from within a body cavity during operation of the device." (*Id.*, [0011]; *see also id.,* [0012] (describing closure of device).) If Hartley's string were substituted for the actuating members in Schaffer's valve, a POSITA would have been motivated to release the buttons to close the valve after insertion of an interventional device "to prevent loss of blood" as disclosed in Hartley. (Ex. 1003, ¶159.)

K. <u>Claim 17</u>

Claim 17 depends from Claim 16 and recites: "wherein the hemostasis valve further includes a spring, and wherein releasing the button to tighten the filament includes driving the button with the spring to tighten the filament." Garrison with Schaffer and optionally Hartley renders Claim 17 obvious. (Ex. 1003, ¶¶160-162.)

Schaffer's valve includes two springs that drive the buttons to pull on the actuating members to close the valve. (Ex. 1003, ¶161.) In a first position (below), the actuating members are "at least partially circumferencially [sic] disposed about the portion 108 of the seal module 100 depressing and at least partially collapsing a portion 108 of the containment structure 160 by a compressive force 67 (e.g. by a spring 210)":

First Position – Actuator Buttons Undepressed

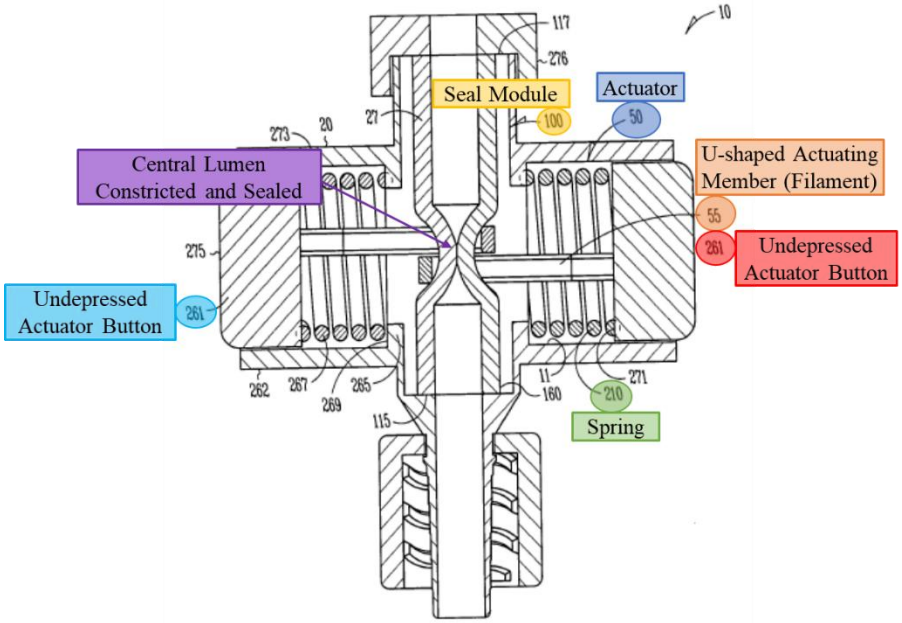

Fig. 32

(Ex. 1007, [0077], Fig. 32.)

If Schaffer's actuating members were replaced with Hartley's string, a POSITA would have reasonably expected the buttons and springs to operate in the same way. (*Supra* §VI.I.2.b.)

L. <u>Claim 18</u>

Claim 18 depends from Claim 1 and recites: "wherein the method further comprises collecting at least some of the first portion of the clot material within a filter chamber fluidly coupled between the pressure source and the elongated shaft." Garrison anticipates this claim or renders it obvious alone or in combination with Goff. (Ex. 1003, ¶¶163-169.)

Garrison's clot treatment system includes a filter 3418 [brown] that is fluidly coupled between the pressure source 3430 [red] and the elongated shaft (catheter 2030) [orange] by flow line 2045 [green]:

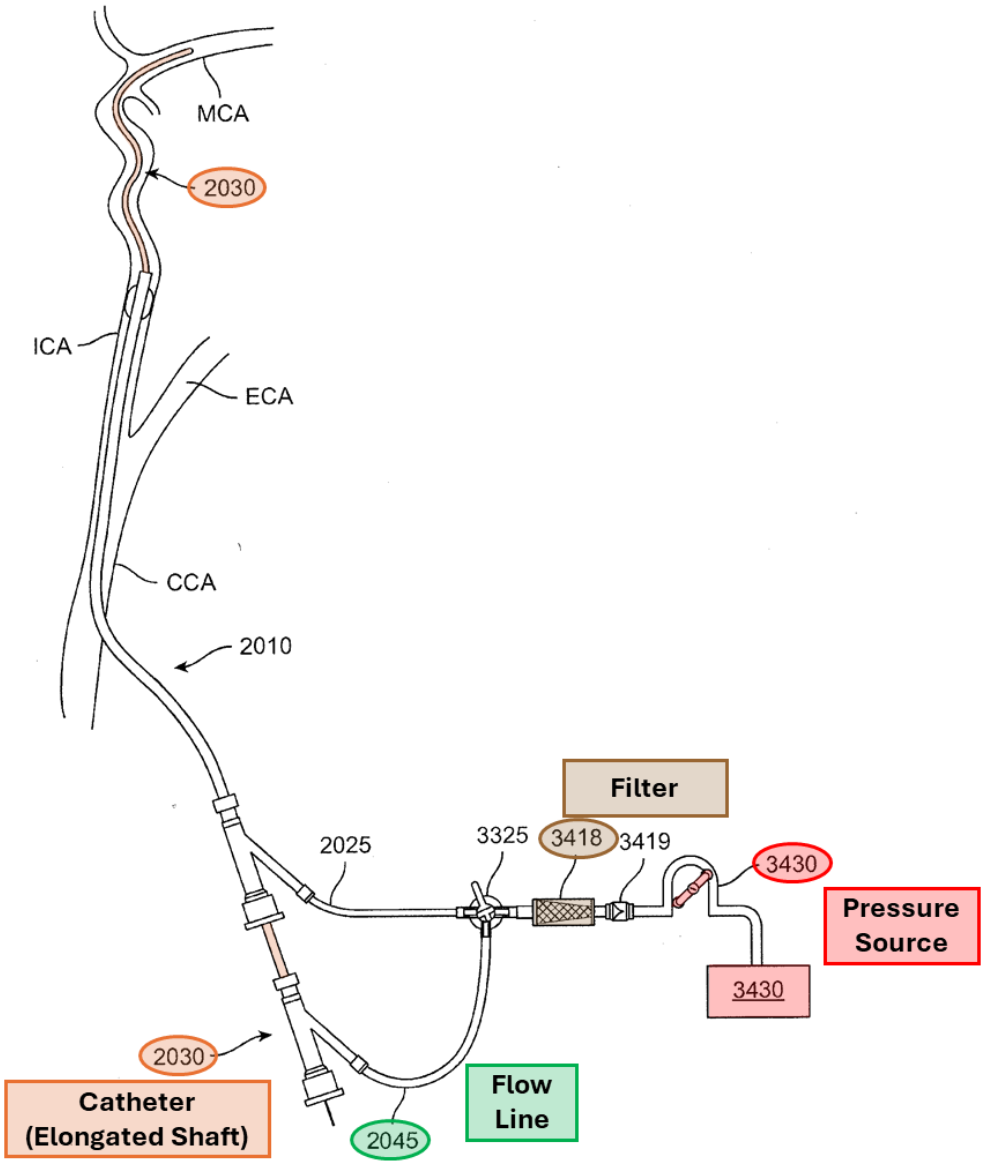

FIG. 34

(Ex. 1006, Fig. 34.) As illustrated in the enlarged excerpt of Figure 34 (below), a filter chamber [blue] surrounds the filter [brown]:

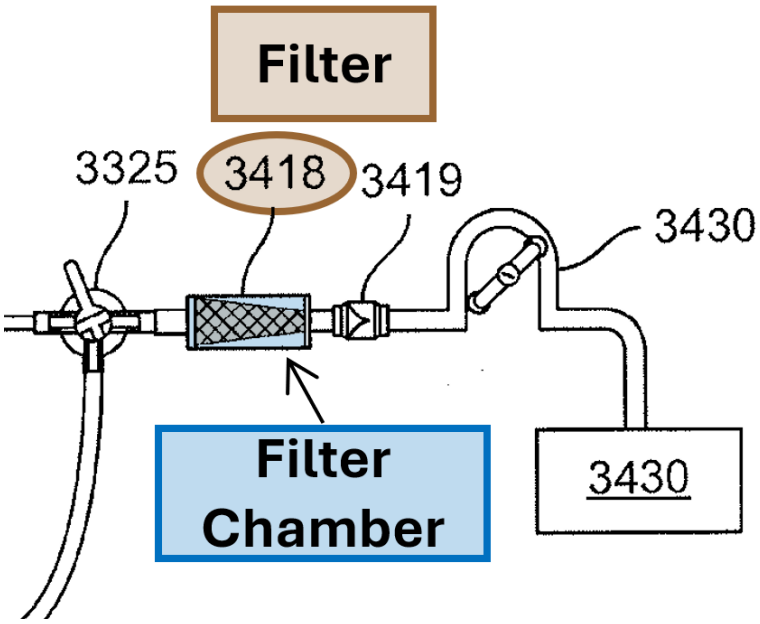

(*Id.* (excerpt).) The chamber that surrounds the filter is necessary to prevent the blood from leaking out of the system and to maintain pressure across the system. (Ex. 1003, ¶164.)

Garrison's filter chamber captures clot material and separates it from the aspirated blood. (*See* Ex. 1006, [0142] ("If desired, the blood could be filtered and subsequently returned to the patient."); Ex. 1003, ¶165.) Similar filters were commonly used with prior-art aspiration systems to separate clot material from the aspirated blood. (*See* Ex. 1005, [0025], Fig. 2; Ex. 1003, ¶165.) Thus, use of Garrison's systems includes collecting at least some of the first portion of the clot material within a filter chamber fluidly coupled between the pressure source and the elongated shaft. (Ex. 1003, ¶165.)

Garrison combined with Goff also renders this claim obvious. (Ex. 1003, ¶¶166-170.) Goff discloses "methods and systems for filtering aspirated materials." (Ex. 1005, Title.) Goff's aspiration system includes a filter housing 18 between the aspiration catheter 12 and the vacuum source (i.e., pressure source):

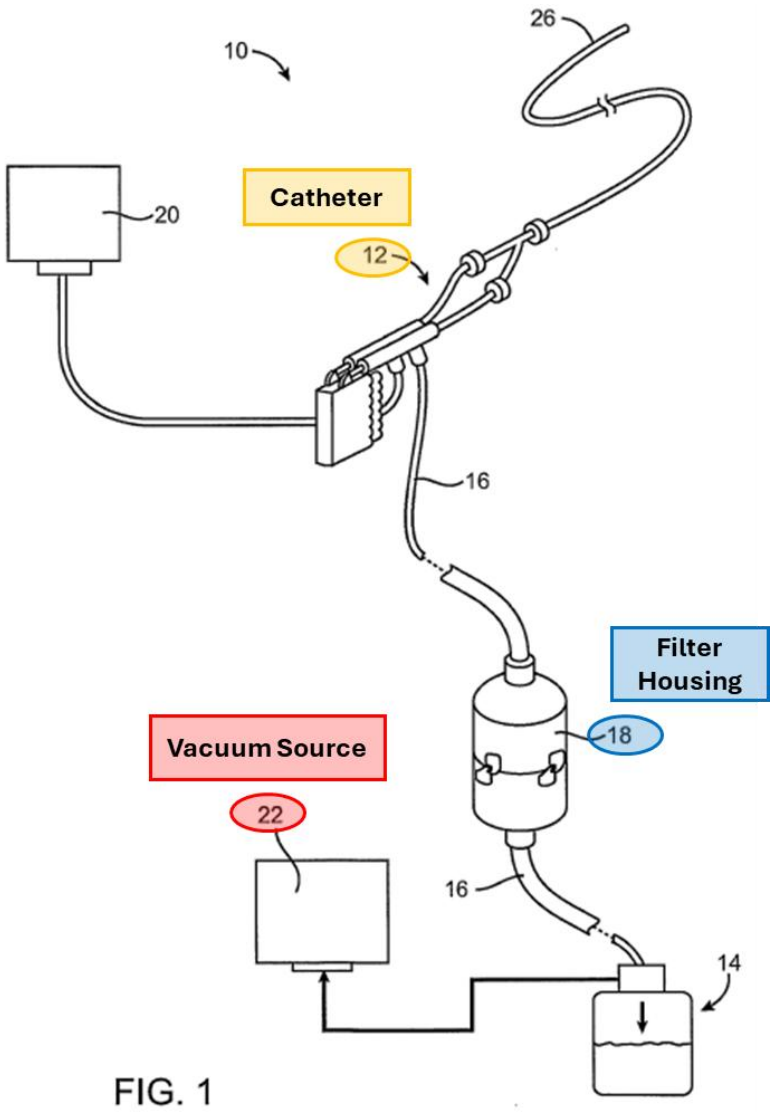

(*Id.*, [0023]-[0025], Fig. 1.)

Goff's "filter assembly 18 typically comprises an upper shell 30 [blue], a lower shell 32 [blue], and a filter element 34 [brown] which may be disposed within the interior of the shells":

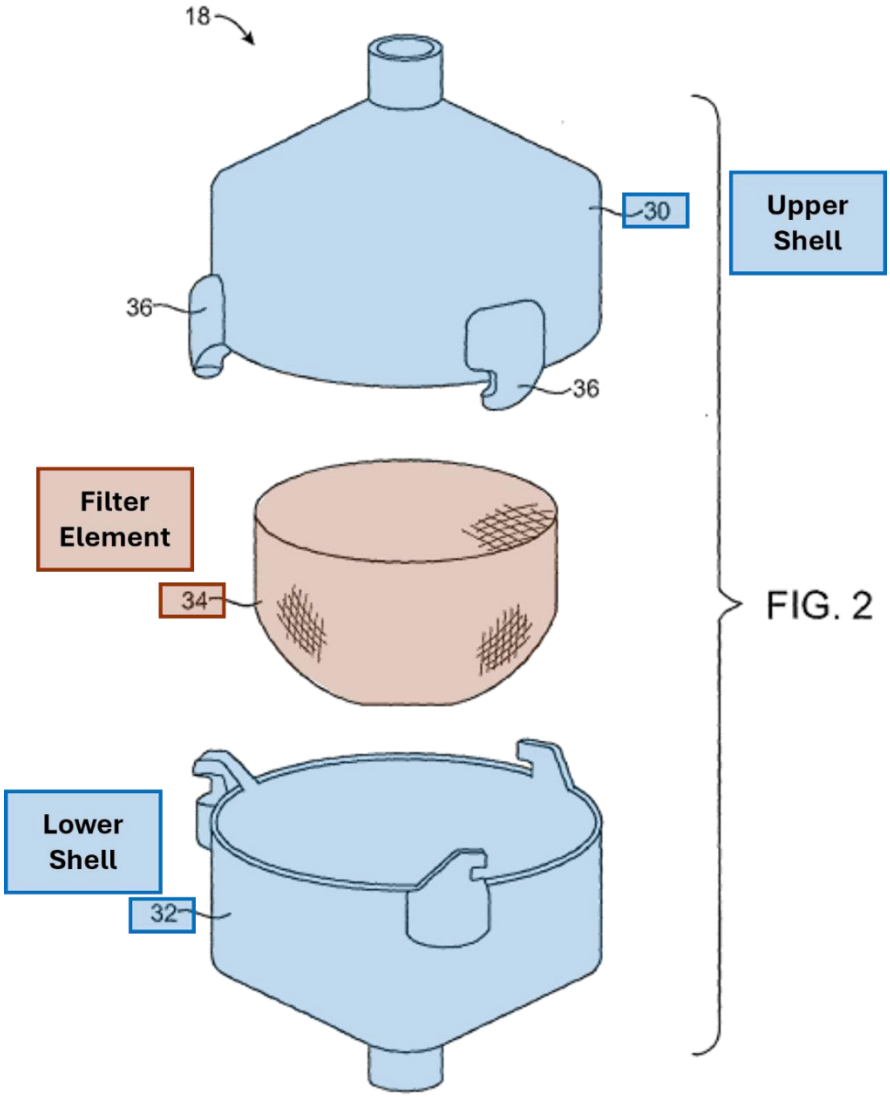

(*Id.*, [0025], Fig. 2; *see also id.*, [0015].)

Goff discloses that its filter forms a structure where "the separated solid materials be in a convenient structure or assembly to permit easy removal and

observation." (*Id.*, [0005].) Thus, Goff discloses collecting at least some of the first portion of the clot material within a filter chamber. (Ex. 1003, ¶168.)

A POSITA would have been motivated to use Goff's removable filter in Garrison's aspiration system. (Ex. 1003, ¶¶169-170.) Goff's filter is used for the same purpose as Garrison's filter – filtering clots from aspirated blood. (Ex. 1005, [0001].) Goff's filter is also positioned between the aspiration catheter and pressure source. (*Id.*, [0025].) Thus, combining Goff's filter with Garrison's system would have merely entailed the combination of known elements (filter and Garrison's system) according to known methods (conventional medical connectors) to yield the predictable result of filtering aspirated blood. *KSR*, 550 U.S. at 416; (Ex. 1003, ¶169.) Moreover, a POSITA would have reasonably expected success in incorporating Goff's filter into Garrison's system due to the similarities between the filters. (Ex. 1003, ¶170.) For example, Goff discloses that its "filter element will have a pore size or screen size selected to separate solid particles at a desired particle size cutoff," the same requirement for Garrison's filter. (Ex. 1005, [0011].)

M. <u>Claim 19</u>

Claim 19 depends from Claim 18 and recites: "wherein the method further comprises removing a filter from within the filter chamber to provide access to the at least some of the first portion of the clot material." Garrison combined with Goff renders this claim obvious. (Ex. 1003, ¶¶171-176.)

Garrison explains that the "filter 3418 and/or a check valve 3419 may also be coupled with the flow line 2045," implying that the filter can be removed from the system. (Ex. 1006, [0131].) Further, in January 2018, a POSITA would have found it obvious to include a removable filter in Garrison's system based on Goff. (Ex. 1003, ¶¶172-176.) As discussed previously, Goff discloses "methods and systems for filtering aspirated materials." (Ex. 1005, Title; *supra* §VI.L.) Goff's filter forms a structure where "the separated solid materials be in a convenient structure or assembly to permit easy removal and observation." (Ex. 1005, [0005].)

Goff would have motivated POSITAs to include a removable filter in Garrison so that the physician could retrieve samples, empty the housing, and clean or replace the filter. (Ex. 1003, ¶¶173-174.) If the filter of Garrison were not already openable, Goff would have motivated a POSITA to configure the filter chamber so that it could be opened to permit this removal or cleaning. (*Id.*) Filter chambers that could be unscrewed (left) or unclasped (right) were well known:

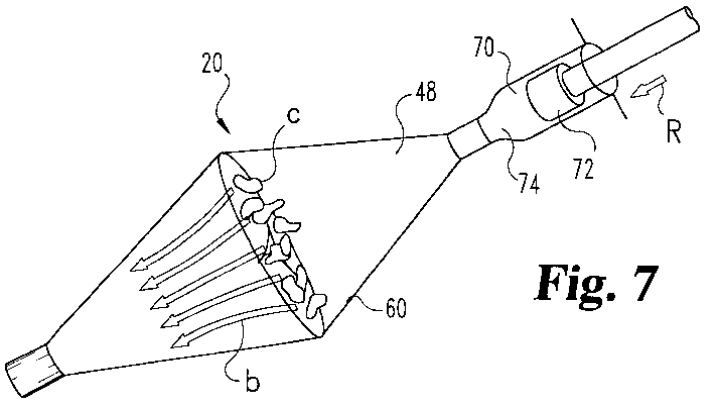

Fig. 7

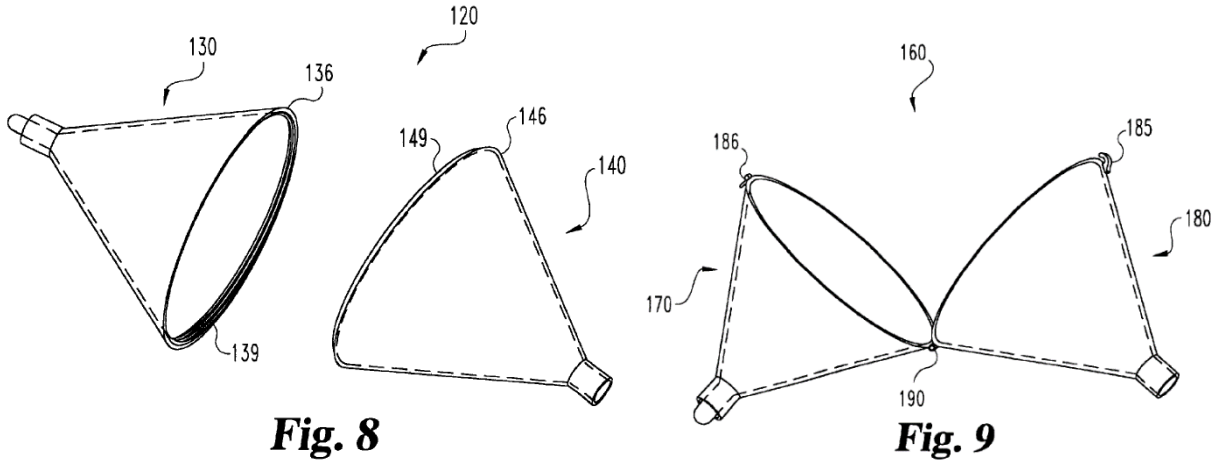

Fig. 8 **Fig. 9**

(Ex. 1013, 5:65-6:10, Figs. 7-9.) A POSITA would have reasonably expected success in arranging Garrison to include a removable filter because the parts needed to form such a filter (e.g., hinge, clip, interlocking tabs, or screw threads) were simple, predictable, and well understood. (Ex. 1003, ¶173.)

Additionally, POSITAs would have been motivated to include a removable filter chamber in Garrison's system so the physician could empty the chamber and clean the filter. (*Id.*, ¶174.) Garrison describes removing multiple occlusions with the aspiration system. (Ex. 1006, [0166].) A POSITA would have recognized that multiple occlusions could clog the filter or fill the chamber, thereby motivating a POSITA to incorporate a removable filter that could be cleaned and replaced. (Ex. 1003, ¶174.)

Alternatively, a POSITA would have been motivated to simply substitute Goff's removable filter for Garrison's filter, and reasonably expected success in doing so, for the reasons previously provided. (*Supra* §VI.L; *id.*, ¶¶175-176.)

N. Claim 20

Claim 20 depends from Claim 19 and recites: "wherein the filter includes a plurality of pores sized to inhibit the clot material from flowing therethrough and to permit blood to flow therethrough." Garrison combined with Goff renders this claim obvious. (Ex. 1003, ¶¶177-180.)

Goff discloses that the "filter element may be any conventional filter element, such as paper, polymer, a woven filter membrane, a screen, or other porous member, or the like." (Ex. 1005, [0011].) Goff further explains, "The filter element will have a pore size or screen size selected to separate solid particles at a desired particle size cutoff." (*Id.*) Goff provides examples of suitable pore sizes (e.g., "1 μm to 1000 μm"). (*Id.*)

A POSITA would have been motivated to use Goff's pore sizes for Garrison's filter, or use Goff's filter in Garrison, because Goff's pore sizes are suitable to "separate solid particles at a desired particle size cutoff" and "will allow the separated solid materials to collect on an exposed surface so that the solid materials will be easily removed and/or absorbed." (*Id.*; Ex. 1003, ¶¶179-180; *see also supra* §§VI.L-M (describing motivation to combine and reasonable expectation of success).)

O. Claim 21

Claim 21 depends from Claim 18 and recites: "wherein the filter chamber is fluidly coupled to the elongated shaft via a first fluid path, wherein the attachment member is fluidly coupled to the elongated shaft along a second fluid path, and wherein the first fluid path branches from the second fluid path." Garrison discloses this limitation. (Ex. 1003, ¶¶181-183.)

Garrison discloses "first fluid path" fluidly coupling the filter chamber [blue] and an elongated shaft [orange] along flow line 2045, as indicated by the green dashed line:

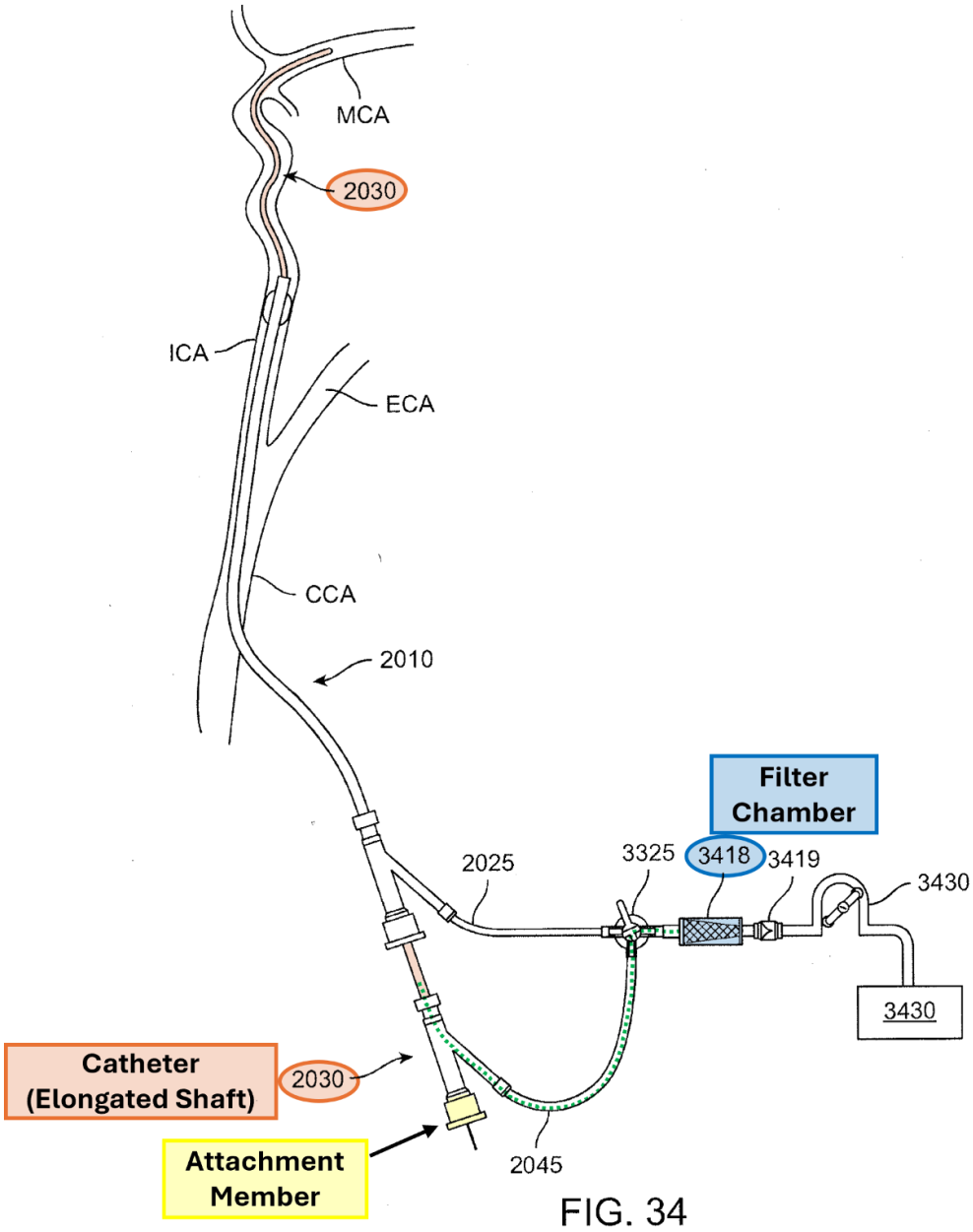

(Ex. 1006, Fig. 34, [0131]; *Supra* §VI.A.1.)

Garrison discloses a "second fluid path" fluidly coupling the attachment member (hemostasis valve) [yellow] to the elongated shaft (catheter) [orange], as illustrated by the dashed red line below:

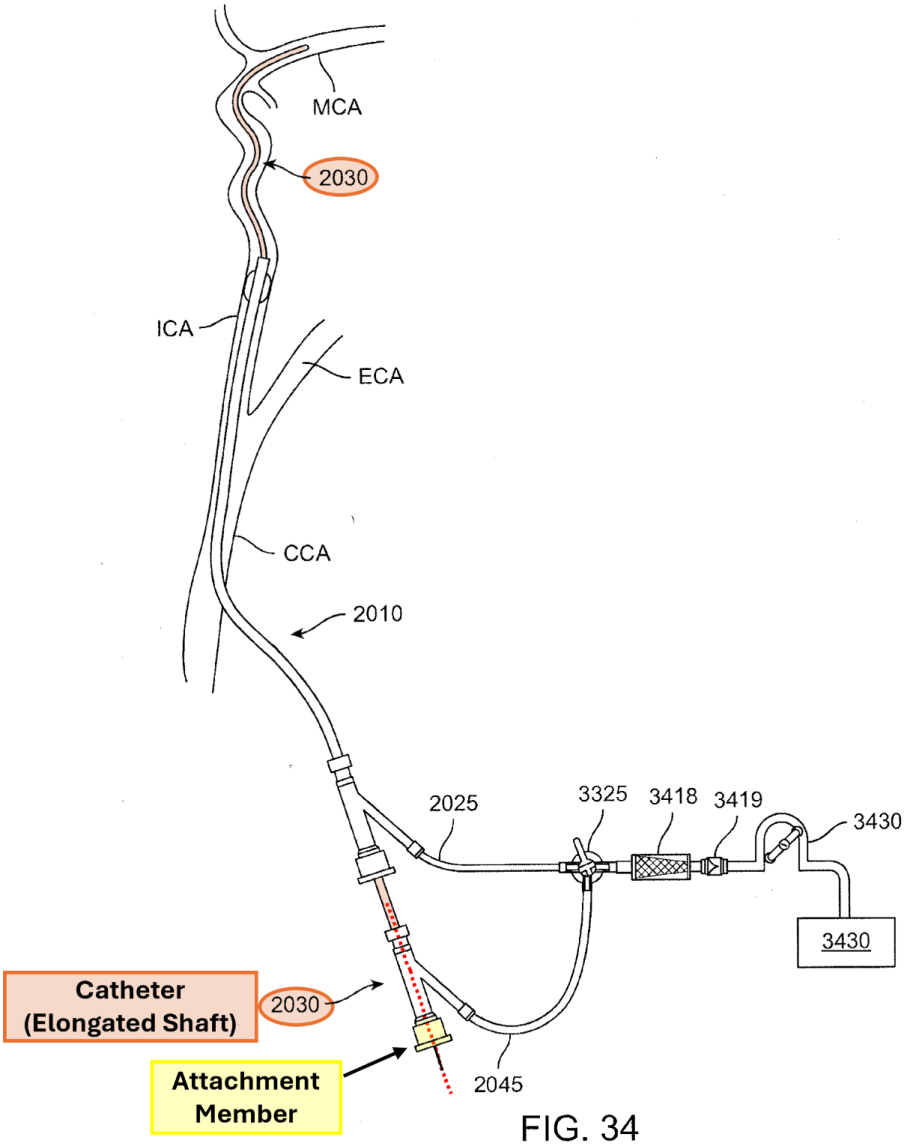

FIG. 34

(Ex. 1006, Fig. 34, [0059], [0131]-[0134] (describing figures); *supra* §VI.A.1; Ex. 1003, ¶183.) Moreover, Garrison's first fluid path [green] branches from the second fluid path [red]:

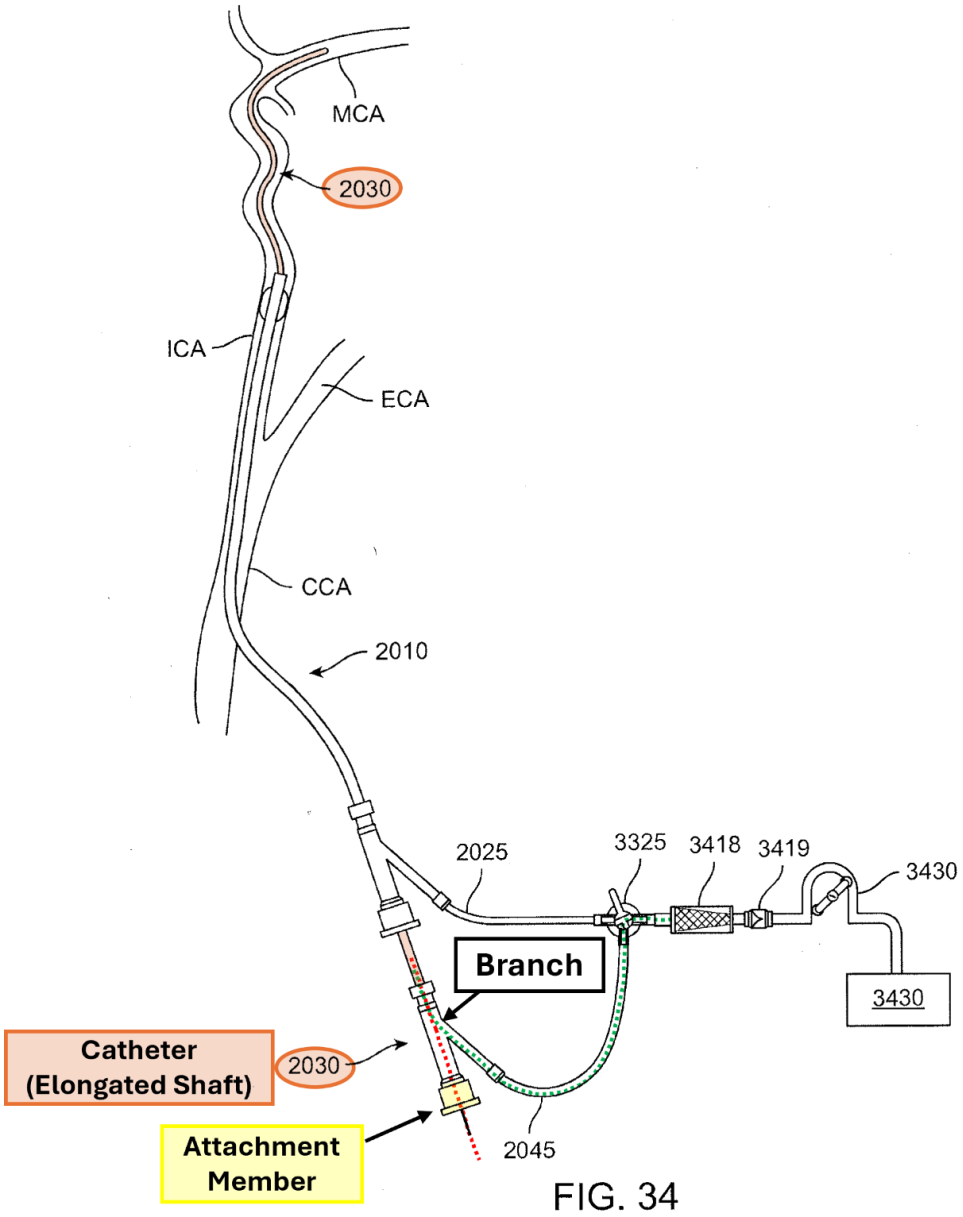

(Ex. 1006, Fig. 34; Ex. 1003, ¶183.) Thus, Garrison discloses this limitation.

P. <u>Claim 22</u>

Claim 22 depends from Claim 21 and recites: "wherein the attachment member is a hemostasis valve." Garrison anticipates this claim or renders it obvious alone or combined with Schaffer or Hartley and optionally Goff for the reasons prrovided in Claims 1, 5-6, and 15. (*Supra* §§VI.A.5, VI.B-C, VI.I.))

Q. Claim 23

Claim 23 depends from Claim 22 and recites: "wherein unsealing the hemostasis valve includes actuating at least one button of the hemostasis valve." Garrison combined with Schaffer and optionally Goff renders this claim obvious for the reasons provided in Claim 6. (*Supra* §VI.C.)

R. Claim 24

Claim 24 depends from Claim 18 and recites: "wherein the filter chamber is spaced apart from the pressure source and connected to the pressure source via at least one tube." Garrison alone or combined with Goff discloses this limitation for the reasons provided in Claim 18. (*Supra* §VI.L.)

S. Claim 25

Claim 25 depends from Claim 18 and first recites: "wherein the filter chamber comprises a housing and a filter within the housing, and wherein the housing includes – a port configured to be fluidly coupled to the elongated shaft via at least one first tube; and a fluid connector configured to be coupled to the pressure source via at least one second tube." Garrison alone or combined with Goff discloses this limitation. (Ex. 1003, ¶¶187-196.)

1. Garrison

As shown in Figure 34 below, Garrison's filter is surrounded by a housing that forms a filter chamber. (Ex. 1006, Fig. 34; *supra* §VI.L.) Garrison's filter

housing is fluidly coupled to the elongated shaft (catheter) by a first tube, and to the pressure source by a second tube:

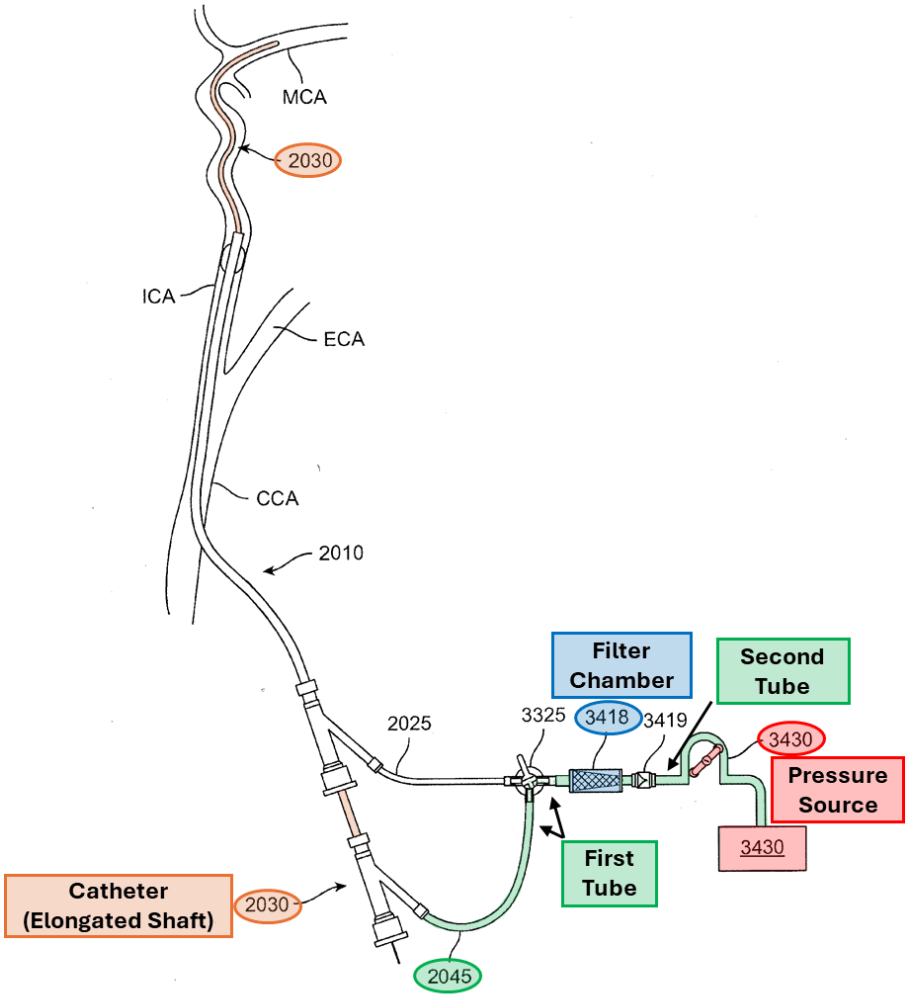

FIG. 34

(Ex. 1006, [0131]-[0134], Fig. 34; Ex. 1003, ¶188.)

In January 2018, a POSITA would have found it obvious to couple the filter to the tubing using conventional, removable ports and fluid connectors, such as Luer-type connectors (e.g., Luer slip and Luer lock) and barb connectors. (Ex. 1003, ¶189; *see also* Ex. 1006, [0062], [0065], Fig. 11 (illustrating stopcock with standard female connector); Ex. 1013, 4:29-40 (describing Luer type connectors for aspiration

catheters). In fact, Garrison incorporates by reference references that describe attaching catheter components using "a conventional luer fitting" or improvements to such fittings. (Ex. 1010, [0130]; *see also* Ex. 1014, 8:45, 8:63 (describing an "auxiliary Luer port"); Ex. 1015, [0056]-[0059] (describing improvements to "standardized … locking Luer taper design").) Each standard connector, such as a Luer-type connector, is a "fluid connector" because it has a lumen to facilitate the passage of fluid, and a "port" because it includes an opening in the connector to facilitate the passage of fluid. (Ex. 1003, ¶189.)

A POSITA would have been motivated to use conventional connectors, such as Luer type connectors, to connect Garrison's filter to the system for several reasons. First, conventional connectors, such as Luer type connectors, allowed physicians to add off-the-shelf tubing and related components simply and quickly. (Ex. 1003, ¶190.) Physicians preferred this flexibility because different procedures may require fewer or additional components, as suggested by Garrison's many embodiments. (*Id.*) Physicians would have been motivated to avoid using unnecessary components due to the additional cost and complexity and would have preferred components that could be easily attached and removed. (*Id.*)

Second, the conventional connectors came in standard sizes that made them compatible with other catheter-based medical components, such as tubing and valves. (*Id.*, ¶191.) Physicians preferred this compatibility because it increased the

options available to the physician during a procedure and, thus, POSITAs were motivated to include these connectors with medical devices. (*Id.*)

Third, physicians were familiar with the conventional connectors. (*Id.*, ¶192.) This familiarity meant physicians preferred the standard connectors, such as Luer type connectors, because they reduced the risk of complications and increased the speed for assembling the systems. (*Id.*) The user preference would have motivated POSITAs to use conventional connectors. Moreover, POSITAs would have reasonably expected success in using these conventional, removable connectors with Garrison's filter because the connectors were simple, widely used, and predictable. (*Id.*) If Garrison's filter included these conventional connectors, then the device would have a fluid connector and port. (*Id.*)

Fourth, combining conventional, removable connectors with Garrison's filter would have merely entailed the combination of known elements (conventional connectors and filter) according to known methods (coupling medical components with conventional connectors) to yield the predictable result of connecting medical components. *KSR*, 550 U.S. at 416; (Ex. 1003, ¶193.)

2. <u>Garrison and Goff</u>

Goff would have further motivated a POSITA to use conventional ports and fluid connectors to join Garrison's filter to the tubing system. (Ex. 1003, ¶¶194-

196.) Goff's "filter assembly 18 typically comprises an upper shell 30, a lower shell 32, and a filter element 34 which may be disposed within the interior of the shells":

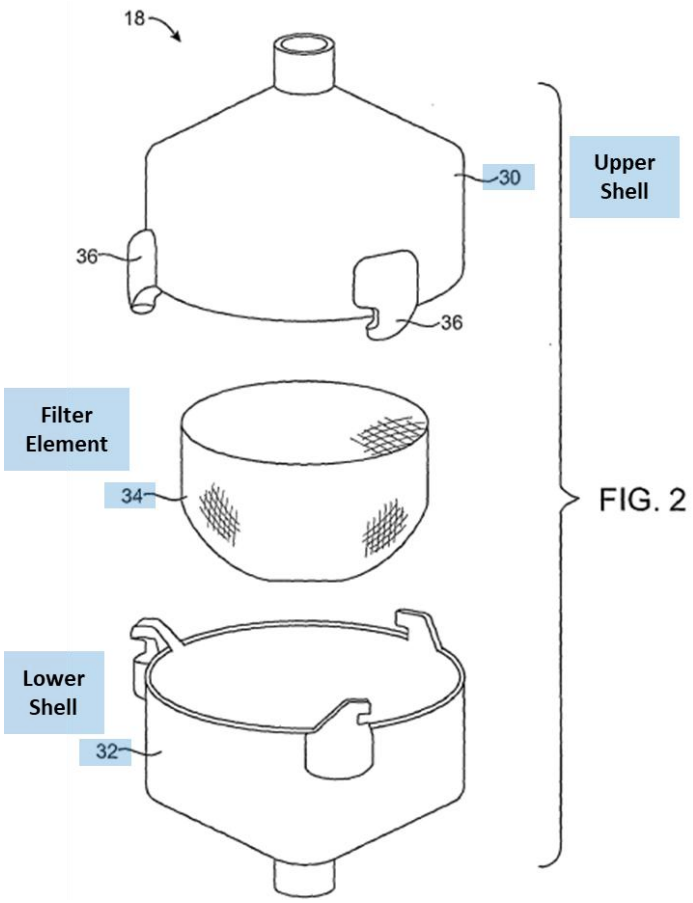

(Ex. 1005, [0025], [0015], Fig. 2.) As shown below, Goff includes ports and/or fluid connectors at both ends of the filter housing:

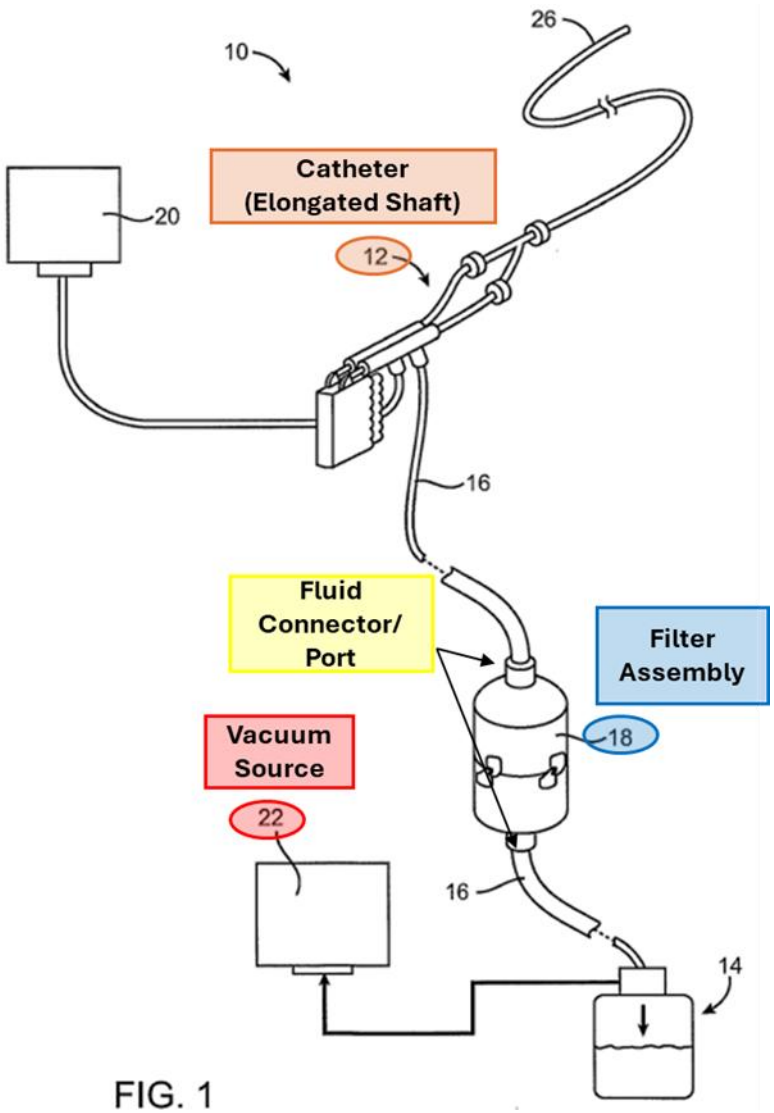

(*Id.*, Fig. 1; Ex. 1003, ¶194.)

Goff discloses, "The housing will further have ***conventional connectors*** to permit connection at an upper end to the aspiration catheter and at a lower end to the aspirate receptacle." (Ex. 1005, [0015] (emphasis added).) As discussed above, conventional connectors in January 2018 included, for example, Luer-type connectors and barb connectors that comprised a fluid connector and a port. (Ex. 1003, ¶195.) Moreover, Goff discloses that its filter forms a structure where "the

separated solid materials be in a convenient structure or assembly to permit easy removal and observation." (Ex. 1005, [0005].) Thus, Goff would have motivated POSITAs to couple Garrison's filter to the system with standard ports and fluid connectors so that the filter could be removed, and the clot material removed and/or observed. (Ex. 1003, ¶195.)

Alternatively, POSITAs would have been motivated to use Goff's removable filter in Garrison's system for the reasons previously provided. (*Supra* §§VI.L-N; Ex. 1003, ¶196.)

T. <u>Claim 26</u>

Claim 26 depends from Claim 25 and recites: "wherein the elongated shaft is fluidly coupled to the pressure source via the filter chamber along a first fluid path." Garrison discloses this limitation alone or combined with Goff for the reasons provided in Claim 18 and Claim 21. (*Supra* §VI.L, §VI.O.)

U. <u>Claim 27</u>

Claim 27 depends from Claim 26 and recites: "wherein the attachment member is fluidly coupled to the elongated shaft along a second fluid path at least partially different than the first fluid path." Garrison discloses this limitation alone or combined with Goff for the reasons provided in Claim 18 and Claim 21. (*Supra* §VI.L, §VI.O.)

V. Claim 28

Claim 28 depends from Claim 27 and recites: "wherein the attachment member comprises a hemostasis valve." Garrison discloses this limitation or renders it obvious alone or combined with Schaffer or Hartley and optionally Goff for the reasons explained in Claims 1, 5-6, and 15. (*Supra* §§VI.A.5, VI.B-C, VI.I.)

W. Claim 29

Claim 29 depends from Claim 28 and recites: "wherein unsealing the hemostasis valve includes actuating at least one button of the hemostasis valve." Garrison combined with Schaffer and optionally Goff renders this claim obvious for the reasons provided in Claim 6. (*Supra* §VI.C.)

X. Claim 30

Claim 30 depends from Claim 1 and recites: "wherein engaging the interventional device with the second portion of the clot material remaining within the blood vessel includes translating the interventional device relative to the elongated shaft." Garrison discloses this limitation or renders it obvious. (Ex. 1003, ¶¶201-203.)

As described in Claim 1, Garrison discloses many interventional devices. (*Supra* §VI.A.6-7.) For example, Garrison describes an expandable member 3905 that can be delivered to the second clot portion with a microcatheter. (Ex. 1006, [0143], Fig. 39.)

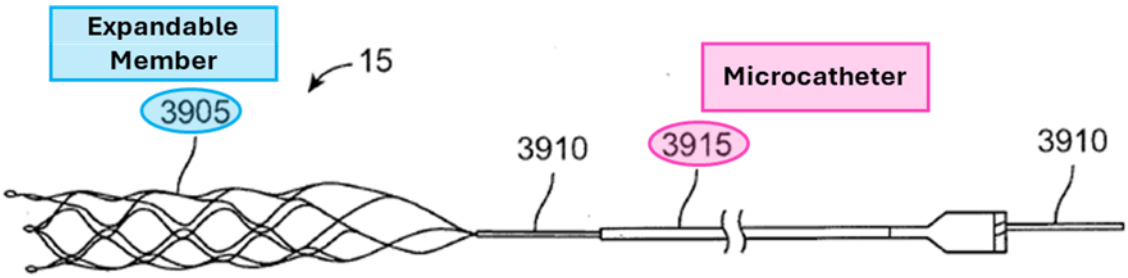

FIG. 39

The expandable member 3095 is expanded at the occlusion and "may capture some or all of the thrombus while being withdrawn into the sheath." (*Id.*) If the microcatheter were delivered to the clot through catheter 2030, as described by Garrison, the expandable member 3095 is translated relative to the elongate shaft at least when it is withdrawn into catheter 2030. (*Supra* §VI.A.6-7; Ex. 1003, ¶202.)

Garrison describes another interventional device inserted through a catheter, like catheter 2030, "for morcellating the thrombotic occlusion as it is being aspirated into the catheter." (Ex 1006, [0125].) Once aspiration is started, the interventional device is "translated back and forth" to break up the clot. (*Id.*) Thus, Garrison discloses at least two examples of interventional devices that are translated with respect to the elongated shaft. (Ex. 1003, ¶203.) Garrison describes using these devices with catheter 2030 and, if it does not, it would have been obvious to do so for the reasons provided in Claim 1. (*Supra* §VI.A.6-7.)

Y. Claim 33

Claim 33 depends from Claim 1 and recites: "wherein the pressure source is coupled to the elongated shaft via at least one tube and wherein the method further comprises flushing the at least one tube with a fluid after aspirating the first portion of the clot material into the elongated shaft and/or after engaging the interventional device with the second portion of the clot material." Garrison discloses this limitation. (Ex. 1003, ¶¶204-206.)

As explained in Claim 21, Garrison's pressure source is coupled to the elongated shaft via at least one tube. (*Supra* §VI.O.) Garrison further discloses that the thrombectomy devices 4100, like those discussed in Claim 30, "may include clot disruption elements such as fluid vortices, ultrasound or laser energy elements, balloons, or the like, ***coupled with flushing*** and aspiration to remove the thrombus." (Ex. 1006, [0144] (emphasis added).)

Likewise, Garrison describes inserting a perfusion catheter through catheter 2030 to treat a clot. (*Id.*, [0170].) Garrison explains that the "perfusion catheter may also be connected to a flush source to perfuse proximal to the occlusion ballon via proximal ports in the perfusion catheter." (*Id.; see also id.*, [0146]-[0157] (describing "Exemplary Embodiments of Perfusion Devices").) Garrison also explains that the perfusion may be used "during the procedure," which means that it can be used to remove the second clot portion. (*Id.*, [0165]-[0166]; Ex. 1003, ¶206.)

If Garrison does not disclose this limitation, a POSITA would have found it obvious to use the flushing-enabled interventional devices after removal of first clot portion for the reasons provided in Claim 1. (*Supra* §§VI.A.6-7.)

Z. Claim 34

Claim 34 depends from Claim 33 and recites: "wherein the fluid is saline." Garrison discloses this limitation. (Ex. 1003, ¶207.) Garrison discloses "flushing of the sheath with ***saline*** or contrast solution." (Ex. 1006, [0066] (emphasis added).) Moreover, a POSITA would have understood saline to be an obvious and conventional fluid for flushing a tube used in an intervascular procedure. (Ex. 1003, ¶207.)

VII. GROUNDS 9-14: GARRISON, SCHAFFER, HARTLEY AND/OR GOFF COMBINED WITH AKLOG AND/OR LAUB RENDERS CLAIM 10 UNPATENTABLE

A. Claim 10

Claim 10 depends from Claim 1 and recites: "wherein the blood vessel is a pulmonary blood vessel." Garrison discloses this limitation or renders the limitation obvious in combination with Aklog or Laub. (Ex. 1003, ¶¶208-228.)

While Garrison focuses on the "treatment of cerebral occlusions," POSITAs would have found it obvious to use and optimize Garrison's clot treatment system for PE based on Laub or Aklog. (Ex. 1006, [0002]; Ex. 1003, ¶¶209-228.) Like Garrison, Laub discloses "a system for removing thrombi and other unwanted

material from the body of a patient, particularly from the patient's vasculature." (Ex. 1012, [0005].) Laub discloses that its system may be used "to remove clots from patients suffering from or at risk of pulmonary embolisms." (*Id.*)

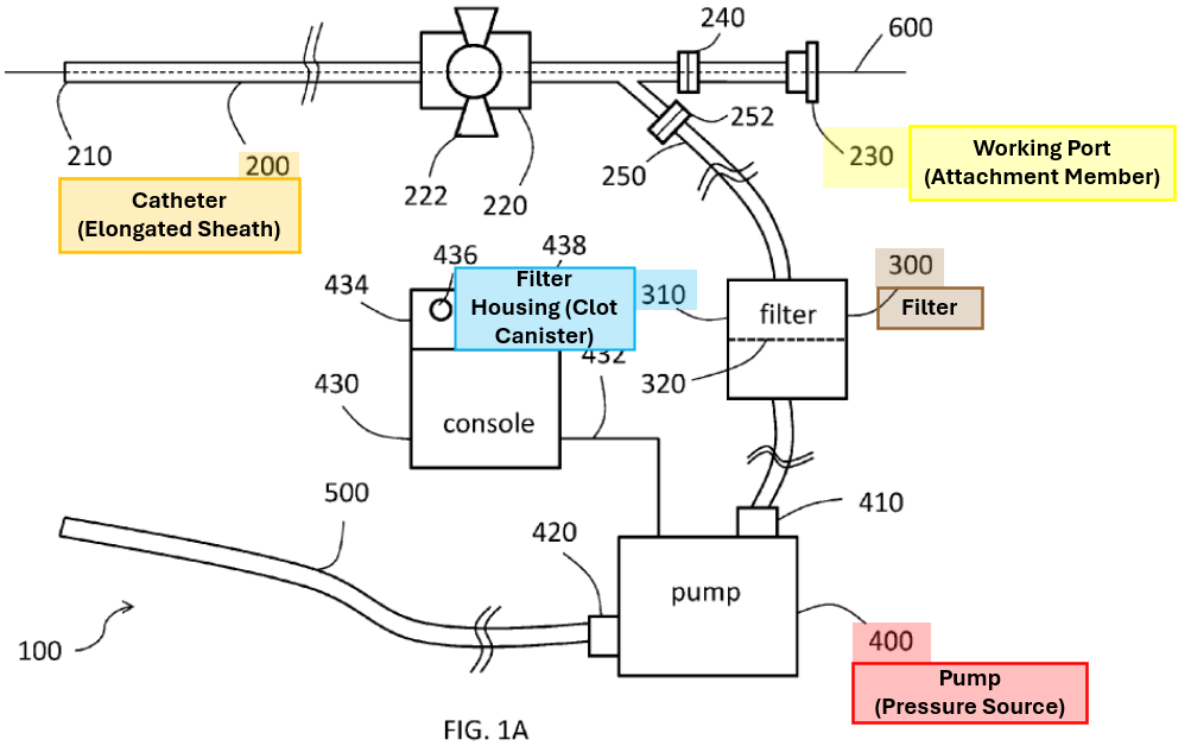

(*Id.*, Fig. 1A.)

Similarly, Aklog discloses systems and methods for removing clot material from "the pulmonary circulation (e.g., pulmonary arteries), systemic venous circulation (e.g., vena cavae, pelvic veins, leg veins, neck and arm veins) or arterial circulation (e.g., aorta or its large and medium branches)." (Ex. 1011, 7:32-38; *see also id.*, 1:17-24, 5:11-19, 5:28-41, Figs. 1, 6-7.) Aklog further explains that an

obstruction of the pulmonary arteries is "known as pulmonary embolism." (*Id.*, 2:20-32, 15:27-53.)

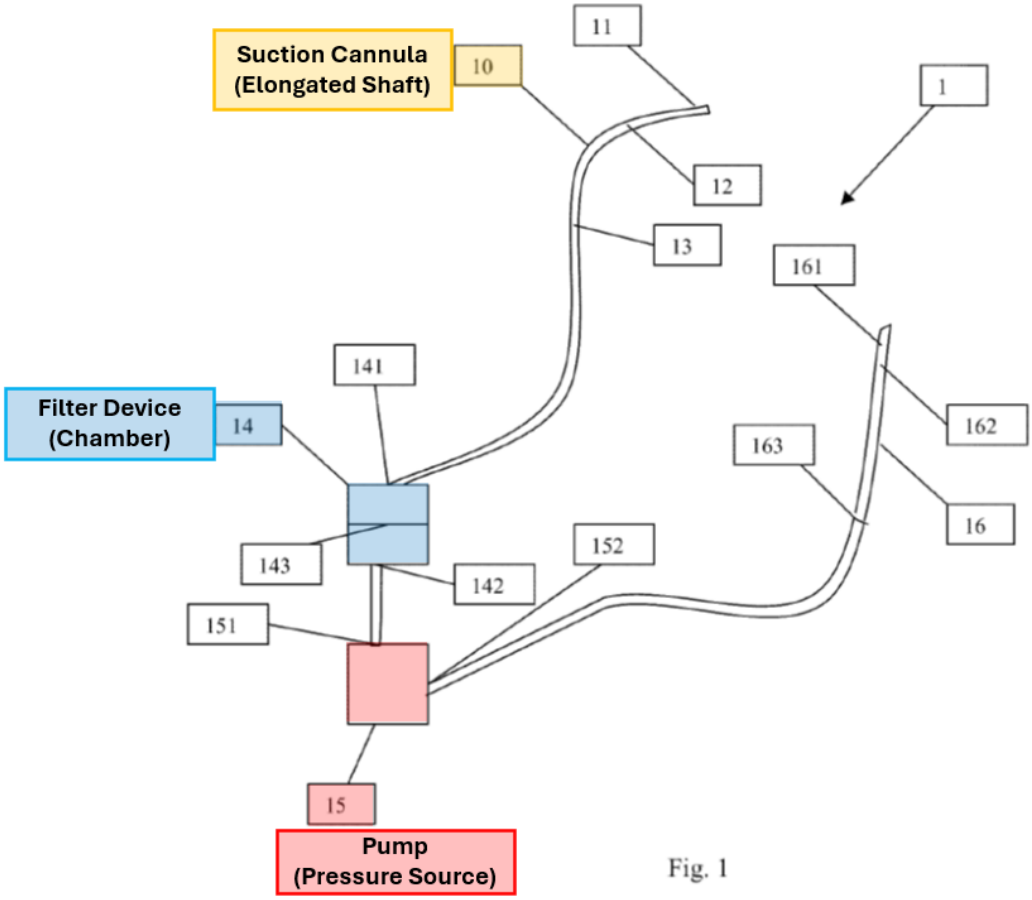

(Ex. 1011, Fig. 1.)

A POSITA would have been motivated to use and optimize Garrison's system to treat PE based on Aklog and Laub because "[t]he general procedure for aspirating a blood clot from a blood vessel is similar regardless of whether the physician is removing the clot from the brain, lungs, legs, or any other party of the body." (Ex. 1022, ¶21; Ex. 1003, ¶¶209-228.) "Generally, a physician inserts an aspiration catheter into the patient's vasculature through a small incision in the skin." (Ex.

1022, ¶21.) Garrison, Laub, and Aklog, for example, all disclose inserting the catheter system through a small incision in the leg to access the transfemoral vein or artery. (*See* Ex. 1006, [0048]; Ex. 1012, [0024]-[0026]; Ex. 1011, 15:30-34.

The physician then initiates aspiration (i.e., suction) by withdrawing a syringe or turning on the pump. (Ex. 1022, ¶22.) Garrison, Laub, and Aklog all disclose using a syringe or pump to generate suction. (Ex. 1011, 5:37-41; Ex. 1006, [0134]; Ex. 1012, abstract.) These references also confirm that aspiration systems for the brain and other body parts, including the lungs (PE), use the same general components. In each reference, the aspiration system includes a pressure source connected by medical tubing to a filter, which is then connected to an aspiration catheter. (Ex. 1011, Figs. 6-7; Ex. 1006, Figs. 33-34; Ex. 1012, Fig. 1A; Ex. 1022, ¶24.)

The similarities between the systems would have further motivated a POSITA to use Garrison's system to treat PEs and given the POSITA a reasonable expectation of success. (Ex. 1003, ¶¶211-228.) In fact, using Garrison's system to treat PEs would have been nothing more than the predictable use of prior art elements according to their established functions. *KSR,* 550 U.S. at 416.

Not surprisingly, POSITAs routinely used aspiration catheters designed for one part of the vasculature to treat different parts of the vasculature. (*See* Ex. 1022, ¶25.) And the prior art patents confirm that using the same aspiration catheter

system across many parts of the vasculature was common practice. (*See* Ex. 1003, ¶¶216-220.)

Further, prior to 2018, POSITAs routinely upsized catheter systems initially intended for one part of the vasculature for another. (Ex. 1022, ¶¶26-37; Ex. 1003, ¶¶212.) For example, Penumbra, a thrombectomy market leader, and Petitioner both adapted their aspiration catheters for removing cerebral clots to treat other types of clots, including PE, by simply increasing the size of the catheters and making routine catheter modifications (e.g., adjusting flexibility). (Ex. 1022, ¶¶26-37.)

In fact, even the '580 patent acknowledges that aspiration systems could be used across different parts of the vasculature, stating "Although many of the embodiments are described below with respect to devices, systems, and methods for treating a ***pulmonary embolism***, other applications and other embodiments in addition to those described herein are within the scope of the technology (e.g., […] ***intravascular procedures for treating cerebral embolism***, etc.)" (Ex. 1001, 3:64-4:3 (emphasis added).) The '580 patent does not identify any reasons why its aspiration catheters can be used across the vasculature while other aspiration catheters could not. This common and successful practice of using the same aspiration system across the vasculature would have given POSITAs additional comfort that Garrison's system could be used and optimized to treat PE. (Ex. 1003, ¶¶210-228.)

A POSITA would have also been motivated to use and optimize Garrison's clot treatment system to treat PEs, and reasonably expected success in doing so, based on the similarities between cerebral clots and clots in other parts of the body. (Ex. 1022, ¶¶38-41; Ex. 1003, ¶215.) The references cited herein illustrate the close relationship between clots and embolisms across the vasculature.

For example, Aklog explains, "DVT causes harm by (1) obstructing drainage of venous blood from the legs … and (2) serving as a reservoir for blood clot to travel to other parts of the body including the heart, lungs (***pulmonary embolism***) and across a opening between the chambers of the heart (patent foramen ovale) to the ***brain (stroke)***, abdominal organs or extremities." (Ex. 1011, 2:13-19 (emphasis added).) Thus, a DVT can become a PE or cerebral embolism. (*See also* Ex. 1022, ¶¶38-41 (describing similarity of clots).) Consequently, POSITAs developing treatments for clots in one body part naturally consulted and borrowed from innovations for treating clots in other body parts. Laub and Aklog explain that PEs are harmful clots that can block blood flow to the lungs and cause death. (Ex. 1012, [0004]; Ex. 1011, 2:20-32.) Given the known danger of PE, POSITAs would have found it obvious to try using Garrison's system to treat PEs and, to the extent necessary, would have found it obvious to optimize the system to treat PEs by, for example, including the slightly larger catheters disclosed in Laub and Aklog. (Ex. 1003, ¶¶210-228.)

Moreover, Garrison's catheters are appropriately sized to treat PE without modification. Garrison describes catheters ranging from 6-10F. (Ex. 1006, [0063].) Penumbra, one of the current market leaders in aspiration thrombectomy, sells aspiration catheters of 7F and 12F for removing PEs and DVTs. (Ex. 1022, ¶39.) Likewise, Petitioner sells its Prodigy Thrombectomy system in sizes ranging from 5F-8F to treat the peripheral vasculature. (*Id.*)

Further, Garrison explains that cerebral occlusions are more difficult to treat than clots in larger vessels due to "special access challenges." (Ex. 1006, [0042]; *see also* Ex. 1022, ¶¶33-37 (describing challenges of treating neurovascular clots).) Garrison explains that the "access route is long, often tortuous and may contain stenosis plaque material in the aortic arch and carotid and brachiocephalic vessel origins, presenting a risk of embolic complications during the access portion of the procedure." (*Id.*) Additionally, "the cerebral vessels are usually more delicate and prone to perforation than coronary or other peripheral vasculature." (*Id.*)

To address these challenges, Garrison describes additional catheters with smaller diameters and enhanced flexibility. (*Id.*; *see also id.*, [0109].) Accordingly, while an aspiration catheter designed to treat PEs may not have the size and flexibility to reach a cerebral clot, a catheter designed to treat cerebral clots ***can*** reach and treat PEs. (Ex. 1022, ¶¶33-37.) For these additional reasons, POSITAs

would have been motivated to use, and found it obvious to try, Garrison's system to treat PE, and reasonably expected success in doing so. (*Id.*)

Further, if Garrison's system required some optimization to more effectively treat PEs, POSITAs would have possessed the necessary skills to perform such optimizations. (Ex. 1003, ¶¶211-212.) These optimizations could have included upsizing Garrison's aspiration catheters (and related components), such as by using Laub's catheters measuring 16F or 20F, optimizing the catheter's flexibility and torque characteristics, and potentially adjusting the suction force. (*Id.*) Such optimizations were routine tasks a POSITA would perform on any catheter project. (*Id.*)

Aklog confirms that POSITAs possessed the knowledge to make these routine optimizations. While Aklog primarily describes treatments for medium and large vessels, Aklog explains "that the systems and methods, hereinafter disclosed, can be scaled and adapted for use within smaller vessels within the body, if desired." (Ex. 1011, 7:43-46.) Thus, Aklog presumes that POSITAs possessed the requisite knowledge to make these simple optimizations. (Ex. 1003, ¶¶212.)

Garrison also discloses several sheath and catheter sizes, further demonstrating that optimizing catheter size was routine. (Ex. 1006, [0063]; [0070].) POSITAs would have reasonably expected success in incorporating some of the larger catheters described in Laub and Aklog into Garrison's system because this

type of routine upsizing was common and because Laub and Aklog describe such catheters as being effective for treating PE. (Ex. 1003, ¶¶210-228; Ex. 1022, ¶¶30-37 (describing real-world upsizing of neuro catheters for PE).)

Further, Garrison specifically suggests combining its aspiration system with components from aspiration systems for other parts of the vasculature, such as the coronary, cerebral, cardiac, and peripheral vasculature. (Ex. 1006, [0070], [0144] (citing Exs. 1014, 1018); Ex. 1003, ¶¶216-217.) The combination of Garrison's catheter system with Laub or Aklog's larger catheter components would have involved the simple substitution of one known element (Garrison's catheter) for another (Laub's or Aklog's catheters) to obtain the predictable result of aspirating blood clots. *KSR,* 550 U.S. at 416. Further, if other components in Garrison's system required upsizing, like the valves, such upsizing was routine. Thus, the specific teachings in Garrison would have further motivated POSITAs to use or optimize Garrison's system to treat PE and would have given POSITAs a reasonable expectation of success in doing so. (Ex. 1003, ¶¶210-228.)

Finally, Garrison already accounts for one challenge POSITAs encountered when using larger aspiration catheters – a larger catheter "may aspirate an unacceptable volume of blood, resulting in excessive fluid loss and/or shock in the patient." (Ex. 1011, 7:23-26.) Aklog explains that the solution to using larger catheters is to reinfuse the "fluid removed (i.e., suctioned or aspirated) from the site

of interest back into a patient, in order to minimize fluid loss within the patient." (*Id.,* 7:47-52.) Garrison addresses this challenge by including an "aspiration pump device 3250 which is configured not to harm blood cells and which may be configured to return blood to the central venous system in real time during the procedure, so there is no reservoir in which the blood remains static." (Ex. 1006, [0135]; *see also id.*, [0136], [0140], Fig. 38 (describing blood return variations).) This blood return solution would have reinforced a POSITA's reasonable expectation of success in upsizing Garrisons' catheters to aspirate PEs. (Ex. 1003, ¶¶214-215; *see also* Ex. 1022, ¶41 (describing blood-loss solutions).)

For all of these reasons, a POSITA would have found it obvious to use, or optimize, Garrison's aspiration system treat PE based on Laub and/or Aklog and would have reasonably expected success in doing so. (Ex. 1003, ¶¶210-228.)

VIII. SECONDARY CONSIDERATIONS

Petitioner is not aware of any evidence of secondary considerations. (Ex. 1003, ¶¶229-230.) If PO identifies evidence of secondary considerations, Petitioner respectfully requests an opportunity to respond.

IX. *SOTERA* STIPULATION

Petitioner hereby stipulates that if the Board institutes this IPR based on the grounds and claims raised in the Petition, Petitioner will not pursue in district court the grounds asserted in the Petition or any other ground that could have been

reasonably raised in this IPR. Thus, there will be no "overlap between issues raised in the petition and in the parallel proceeding[.]" *Apple v. Fintiv*, IPR2020-00019, Paper 11 at 6 (PTAB Mar. 20, 2020) (precedential).

X. MANDATORY NOTICES, GROUNDS FOR STANDING, AND FEE PAYMENT

A. Real Parties-In-Interest (37 C.F.R. §42.8(b)(1))

Imperative Care, Inc. is the real parties in interest for Petitioner.

B. Related Matters (37 C.F.R. §42.8(b)(2))

In the Litigation, PO filed a Third Amended Complaint alleging that Petitioner's Symphony system infringes the '580 patent, as well as U.S. Patent Nos. 11,969,333; 11,554,005; 11,744,691; 11,697,012; 11,844,921, 11,865,291, 11,974,910; 12,109,384; 12,156,669; and 12,239,333. *Inari Medical, Inc. v. Imperative Care, Inc.*, No. 24-cv-3117 (N.D. Cal., filed May 22, 2024). In its Second Amended Complaint, Petitioner also dropped its infringement allegations regarding U.S. Patent No. 11,697,011, which is the subject of an instituted IPR. (Ex. 1031.) The Court recently vacated the claim construction schedule and stated that it would revisit scheduling after a hearing on Petitioner's Motion to Stay the Litigation pending resolution of the IPRs. (Ex. 1040.) The court has not set a trial date in the Litigation. (Ex. 1038.) Petitioner's Motion to Stay the Litigation pending resolution of the IPRs is scheduled for hearing on July 16, 2025. (Ex. 1039-1040.)

Petitioner has filed eight IPRs against patents asserted by PO in the Litigation: (1) *Imperative Care, Inc. v. Inari Medical, Inc.,* IPR2024-01157 requesting review of U.S. Patent No. 11,697,011 (Filed July 8, 2024); (2) *Imperative Care, Inc. v. Inari Medical, Inc.*, IPR2024-01257 requesting review of U.S. Patent No. 11,744,691 (Filed August 12, 2024); (3) *Imperative Care, Inc. v. Inari Medical, Inc.,* IPR2025-00156 requesting review of U.S. Patent No. 11,697,012 (Filed November 8, 2024); (4) *Imperative Care, Inc. v. Inari Medical, Inc.,* IPR2025-00289 requesting review of U.S. Patent No. 11,554,005 (Filed December 13, 2024); (5) *Imperative Care, Inc. v. Inari Medical, Inc.,* IPR2025-00728 requesting review of U.S. Patent No. 11,844,921 (Filed March 13, 2025); (6) *Imperative Care, Inc. v. Inari Medical, Inc.,* IPR2025-00989 requesting review of U.S. Patent No. 11,865,291 (Filed May 9, 2025); (7) *Imperative Care, Inc. v. Inari Medical, Inc.,* IPR2025-01021 requesting review of U.S. Patent No. 11,969,333 (Filed May 19, 2025). (8) *Imperative Care, Inc. v. Inari Medical, Inc.,* IPR2025-01025 requesting review of U.S. Patent No. 11,974,910 (Filed May 20, 2025). The Board granted institution of the ’011, ’012, and ’005 patent IPRs. The Board denied institution of the ’691 patent IPR on grounds unrelated to this IPR.

C. <u>Lead and Backup Counsel (37 C.F.R. §42.8(b)(3))</u>

Petitioner provides the following designation of counsel, all of whom are included in Customer No. 20,995 identified in Petitioner’s Power of Attorney.

Lead Counsel	**Back-up Counsel**
Joshua J. Stowell (Reg. No. 64,096) 2jys@knobbe.com BoxImperative580@knobbe.com Knobbe, Martens, Olson, & Bear, LLP Postal and Hand-Delivery Address: 2040 Main St., 14th Floor Irvine, CA 92614 Telephone: 949-760-0404 Facsimile: 949-760-9502	Joseph R. Re (Reg. No. 31,291) 2jrr@knobbe.com Brian C. Barnes (Reg. No. 75,805) 2bcb@knobbe.com Knobbe, Martens, Olson, & Bear, LLP Postal and Hand-Delivery Address: 2040 Main St., 14th Floor Irvine, CA 92614 Telephone: 949-760-0404 Facsimile: 949-760-9502

D. Service Information (37 C.F.R. §42.8(b)(4))

Please direct all correspondence to lead counsel and back-up counsel at the addresses shown above. Petitioner also consents to electronic service by email to BoxImperative580@knobbe.com.

E. Grounds for Standing (37 C.F.R. §42.104)

Petitioner certifies that the ’580 patent is available for IPR and that Petitioner is not barred or estopped from requesting IPR on the identified grounds. This Petition is being filed within one year of service of the First Amended Complaint in the Litigation, which was the first complaint to include the ’580 Patent.

F. Payment of Fees (37 C.F.R. §42.15(a))

The fee for this petition has been paid. Additional fees may be charged to Deposit Account 11-1410.

XI. CONCLUSION

For the reasons above, Petitioner has established a reasonable likelihood of prevailing in showing that at least one or more claims are unpatentable as anticipated or obvious and, therefore, requests that the Board institute this IPR.

Dated: July 8, 2025

By: */Joshua J. Stowell/*

Joshua J. Stowell (Reg. No. 64,096)
Joseph R. Re (Reg. No. 31,291)
Brian C. Barnes (Reg. No. 75,805)

KNOBBE MARTENS OLSON & BEAR, LLP

Attorneys for Petitioner Imperative Care, Inc.

CERTIFICATE OF COMPLIANCE

Pursuant to 37 C.F.R. § 42.24(d), the undersigned certifies that this PETITION FOR *INTER PARTES* REVIEW OF U.S. PATENT NO. 12,016,580 contains 13,855 words according to the word-processing program used to prepare this paper. The foregoing word count complies with the 14,000-word type-volume limit specified by 37 C.F.R. § 42.24(a)(1).

Dated: July 8, 2025 By: */Joshua J. Stowell/*
Joshua J. Stowell (Reg. No. 64,096)
KNOBBE MARTENS OLSON & BEAR, LLP

CERTIFICATE OF SERVICE

The undersigned hereby certifies that on the date below a copy of this PETITION FOR *INTER PARTES* REVIEW OF U.S. PATENT NO. 12,016,580, PETITIONER'S POWER OF ATTORNEY, AND EXHIBITS 1001-1040, were served by Priority Mail Express on the Patent Owner at the correspondence address of record for the subject patent as follows:

25096 - PERKINS COIE LLP - SEA General
PATENT-SEA
P.O. BOX 1247
SEATTLE, WA 98111-1247
UNITED STATES

A courtesy copy has been sent by email on this day to Patent Owner's counsel of record in the Litigation as follows:

Amanda Tessar Perkins Coie LLP 1900 Sixteenth Street, Suite 1400 Denver, CO 80202 Telephone: 303.291.2357 Email: atessar@perkinscoie.com	Ramsey M. Al-Salam Perkins Coie LLP 1201 Third Avenue, Suite 4000 Seattle, WA 98101-3099 Telephone: 206.359.8000 Email: ralsalam@perkinscoie.com
Daniel T. Keese Perkins Coie LLP 1120 NW Couch Street, 10th Floor Portland, Oregon 97209-4128 Telephone: 503.757.2000 Email: DKeese@perkinscoie.com	Ruben Tyler Kendrick Perkins Coie LLP 1201 Third Ave., Suite 4900 Seattle, WA 98101 Telephone: 206.359.8375 Email: rkendrick@perkinscoie.com
Trevor Jonathan Bervik Perkins Coie LLP 1900 Sixteenth Street, Suite No. 1400 Denver, CO 80202 Telephone: 303.291.2390 Email: tbervik@perkinscoie.com	

Dated: July 8, 2025 By: */Joshua J. Stowell/*
Joshua J. Stowell (Reg. No. 64,096)
KNOBBE MARTENS OLSON & BEAR, LLP