Trials@uspto.gov
571-272-7822

Paper: 35
Date: January 16, 2026

UNITED STATES PATENT AND TRADEMARK OFFICE

BEFORE THE PATENT TRIAL AND APPEAL BOARD

IMPERATIVE CARE, INC.,
Petitioner,

v.

INARI MEDICAL, INC.,
Patent Owner.

IPR2024-01157
Patent 11,697,011 B2

Before JEFFREY N. FREDMAN, ERIC C. JESCHKE, and TIMOTHY G. MAJORS, *Administrative Patent Judges.*

MAJORS, *Administrative Patent Judge*.

JUDGMENT
Final Written Decision
Determining All Challenged Claims Unpatentable
35 U.S.C. § 318(a)
Denying Patent Owner's Motion to Exclude
37 C.F.R. § 42.64(c)

Imperative Care v. Inari Medical
IPR2025-01264
Imperative Care Ex. 1087

I. INTRODUCTION

Imperative Care, Inc. ("Petitioner") filed a Petition (Paper 1, "Pet.") requesting *inter partes* review of claims 1–9 of U.S. Patent No. 11,697,011 B2 (Ex. 1001, "the '011 patent"). Pet. 1, 15. Inari Medical, Inc. ("Patent Owner") filed a Preliminary Response (Paper 5, "Prelim. Resp.").

We instituted trial on January 23, 2025. Paper 7 ("Inst. Dec."). During trial, Patent Owner filed a Patent Owner Response. Paper 13 ("PO Resp."). Petitioner filed a Reply (Paper 18 ("Pet. Reply")) and Patent Owner filed a Sur-reply (Paper 21 ("PO Sur-reply")). We held an oral hearing on October 29, 2025, and a transcript of that hearing is of record. Paper 34 ("Tr.").

Patent Owner's Motion to Exclude (Paper 28) remains pending. We address that motion in Section V below.

We have jurisdiction under 35 U.S.C. § 6(b). After considering the full record developed through trial, we determine that Petitioner has proved by a preponderance of the evidence that the challenged claims are unpatentable. *See* 35 U.S.C. § 316(e). Our reasoning is explained below, and we issue this Final Written Decision under 35 U.S.C. § 318(a).

II. BACKGROUND

A. Real Parties-in-Interest

Petitioner identifies itself as the real party-in-interest. Pet. 86. Patent Owner identifies itself as the real party-in-interest and further states that it is a wholly-owned subsidiary of Stryker Corporation. Paper 15, 2.

B. Related Matters

The parties identify the following lawsuit involving assertion of the ’011 patent (and additional patents): *Inari Medical Inc. v. Imperative Care, Inc.*, No. 24-cv-3117 (N.D. Cal.).[1] Pet. 86; Paper 15, 2.

In the above-referenced lawsuit, the district court denied Patent Owner’s motion for a preliminary injunction based on two asserted patents, including one—the ’921 patent—in the same family as the ’011 patent. Ex. 1020 (Sept. 29, 2025, order denying motion).[2] In opposing that motion, defendant Imperative Care (i.e., Petitioner) argued that the ’921 patent’s claims are invalid as anticipated by Schaffer and/or obvious over Schaffer in combination with other prior art, including Hartley. *Id.* at 14–16. In its order, the court found that Petitioner had raised “a substantial question of validity” of the ’921 patent’s claims based on alleged anticipation and obviousness. Ex. 1020, 15–17 (finding merit in Petitioner’s anticipation and obviousness challenges “alone” sufficient to preclude Patent Owner from prevailing on its motion for a preliminary injunction).

In the present IPR, Petitioner raises similar patentability challenges against similar claims of the ’011 patent. Ex. 1020, 16 (“Inari does not dispute the similarities between the ’011 Patent claims analyzed by the PTAB [(in the Institution Decision)] and claim 1 of the ’921 Patent.”); *see*

---

[1] Patent Owner further states that *Inari Medical, Inc. v. Inquis Medical, Inc.*, No. 24-1023-CFC (D. Del.) “may involve related issues.” Paper 15, 2.

[2] Patent Owner moved for a preliminary injunction on U.S. Patent No. 11,844,921 (“the ’921 patent”) and U.S. Patent No. 11,974,910 (“the ’910 patent”). Ex. 1020, 3 (explaining that, “[a]lthough Inari asserts many more patents in this case, for purposes of this motion,” Inari asserted infringement of only the ’921 and ’910 patents). The ’921 and ’910 patents are challenged, respectively, in IPR2025-00728 and IPR2025-01025.

infra Section II.E. (table of grounds including, *inter alia*, anticipation by Schaffer and obviousness over Schaffer and Hartley). We see no inconsistency in the court's analysis of the obviousness issue as part of its order and our determination on the obviousness of the claims over Schaffer and Hartley as discussed in detail below. *Inergy Tech., Inc. v. Force MOS Tech. Co., Ltd.*, IPR2024-00094, Paper 44 at 2–3 (Director Nov. 25, 2025) ("If the Board reaches a different outcome than a district court, the Board must explain why the different outcome is warranted.").[3] Although the court's discussion about alleged anticipation by Schaffer may differ from our conclusion on the anticipation issue here, we note that the court did not address any claim construction dispute or expressly construe the claims of the related '921 patent.[4] Tr. 7:23–8:1 (counsel representing that "[t]here's been no claim construction" and the lawsuit is now stayed). As we discuss in detail below, based on our construction of the recited "filament" term and the record developed through trial, we find that Schaffer does not anticipate the challenged claims. *See infra* Sections III.C., III.E.

---

[3] *See* Memorandum from Coke Stewart to Members of the PTAB (Sept. 16, 2025), *available at* https://www.uspto.gov/sites/default/files/documents/Memo_re_prior_findings_of_fact_and_conclusions_of_law_9_16_25.pdf.

[4] In related proceedings, Petitioner argues the court's denial of Patent Owner's preliminary injunction motion confirms the merits of Petitioner's challenges to related patents undergoing IPR, while Patent Owner argues the order is irrelevant because it is based on different evidence under a different standard. *See, e.g.*, IPR2025-01021, Paper 13, 1–2 and Paper 14, 1–2. We have considered the court's order but, ultimately, this Final Written Decision is based on the argument and record before us in this proceeding.

C. The ’011 Patent (Ex. 1001)

The ’011 is titled “Hemostasis Valves and Methods of Use.” Ex. 1001, code (54). The ’011 patent issued July 11, 2023, from an application filed March 25, 2022. *Id.* at codes (22), (45). The patent claims the priority benefit of earlier non-provisional applications and a provisional application that was filed September 6, 2017. *Id.* at code (60), (63).

According to the ’011 patent, “the desire for improved patient outcomes has led to the development of hemostasis valves that facilitate minimally invasive surgery.” *Id.* at 1:27–29. “In minimally invasive surgery, small incisions are created through a blood vessel [into] which one or several catheters are inserted.” *Id.* at 1:30–32. “These catheters are moved to a position proximate to tissue, nerves, or other body structures targeted by the surgery, and then tools for performing the procedure are inserted through the lumens of some or all of these catheters.” *Id.* at 1:33–37. “To minimize blood loss, prevent delivery of air into the vasculature, and to facilitate maintenance of sterility within the patient’s body . . . , these catheters are equipped with hemostasis valves.” *Id.* at 1:38–41. The patent cites a desire for “new and improved” hemostasis valves and aims to describe such a valve. *Id.* at 1:56; *see also id.* at 1:61–5:19 (“Summary”).

The ’011 patent discloses that “[t]he valve can include a tubular [elongate] member that can be constricted, collapsed, and/or sealed by one or several tensioning mechanisms.” *Id.* at 1:62–65. According to the patent, “[t]he tensioning mechanism can include at least one filament that extends around at least a portion of the tubular member,” and such “filament can interact with the tubular member to constrict, collapse, and/or seal the tubular member via manipulation of the tensioning mechanism(s).” *Id.* at 1:65–2:8 (disclosing that such valve, by action of the tensioning mechanism

and filament, "can seal around a wide range of tool sizes and shapes" that are passed through the tubular member). The patent further discloses that, in embodiments, the tensioning mechanism can include an actuator coupled to the filament, which actuator can be operated to control movement of the filament from a first position (where the central lumen is constricted and sealed) to a second position (where the central lumen is un-constricted and open). *Id.* at 2:47–60. Moreover, the patent explains, an actuator can be biased toward the first or second positions. *Id.* at 2:60–62.

We reproduce below the '011 patent's Figure 2 including annotations provided by Petitioner, with an additional annotation from the Board.

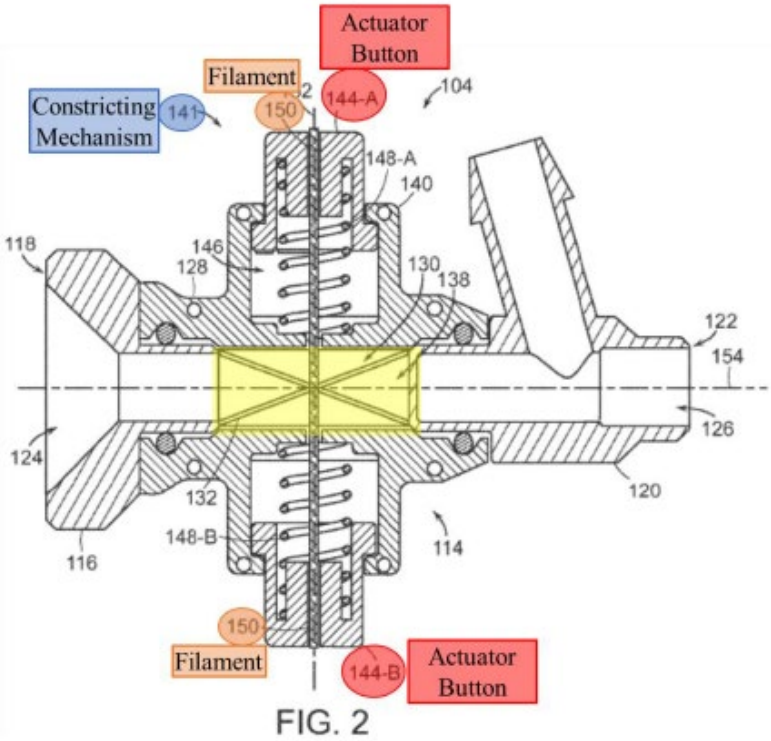

Pet. 8 (yellow highlight added by Board); Ex. 1001, 8:1–53, Fig. 2.

Figure 2, as shown above, is a side cross-sectional view of an embodiment of valve (104) described in the '011 patent. Ex. 1001, 5:25–26. The valve includes housing 128, elongate member 132 defining a central lumen 138 and having a central axis 154, constricting mechanism 141 (blue), filament

150 (orange), and oppositely disposed actuator buttons 144-A and 144-B (red). *Id.* at 8:1–9:25. In this embodiment, the filament is disposed around the elongate member and the opposing ends of the filament are coupled, respectively, to the opposing actuator buttons, which buttons are undepressed; the buttons are biased towards a first (i.e., closed) configuration by a bias feature (e.g., coil springs 148A, 148B) wherein the elongate member is collapsed and sealed in the region highlighted yellow (central lumen 138) by a tension applied to the filament by the spring-actuated buttons. *Id.* Although not shown in the figure above, when the actuator buttons are depressed, the constricting mechanism moves to a second (i.e., open) configuration where the filament is loosened, allowing expansion of the elongate member and unsealing of the central lumen. *Id.* at 9:51–59, Fig. 3 (showing open configuration).

According to the ’011 patent, the “filament 150 can be arranged in a variety of configurations.” Ex. 1001, 13:29–30. In embodiments, the filament can comprise a “single loop 604 that can extend around the elongate member 132 and/or through which the elongate member 132 can be received as shown in FIG. 6,” or a filament may be configured to form a “U-shaped section” or “bight” as depicted in Figures 8 and 9. *Id.* at 13:30–54 (disclosing that “filament 150 can be configured to form a bight 800, which bight 800 can be a single bight or multiple bights” and “[a]s used herein, a ‘bight’ refers to a U-shaped section between the two ends of the filament 150”). The patent further discloses that the “filament can be made from a variety of materials including, for example, a polymer, a synthetic, and/or a metal.” *Id.* at 9:10–13.

Figures 6–9 of the ’011 patent are reproduced below and depict multiple filament configurations.

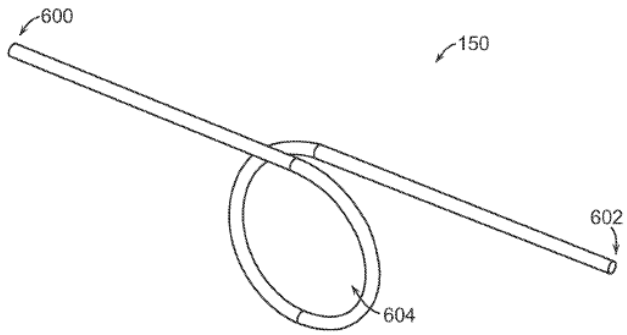

FIG. 6

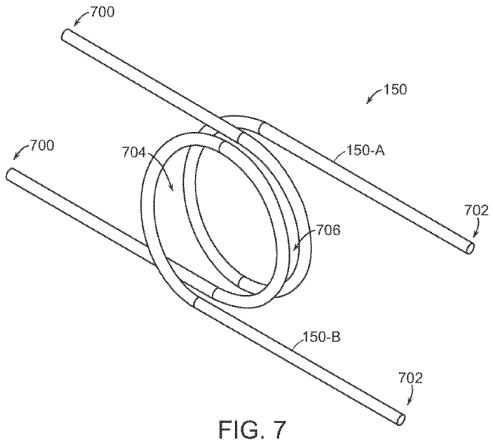

FIG. 7

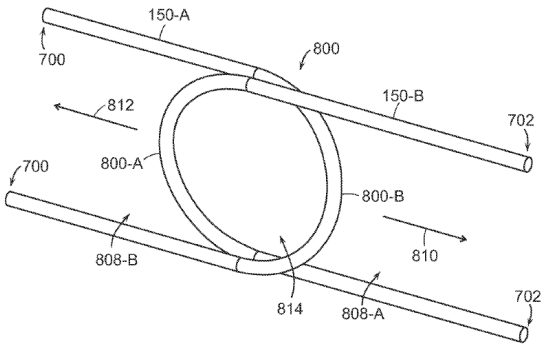

FIG. 8

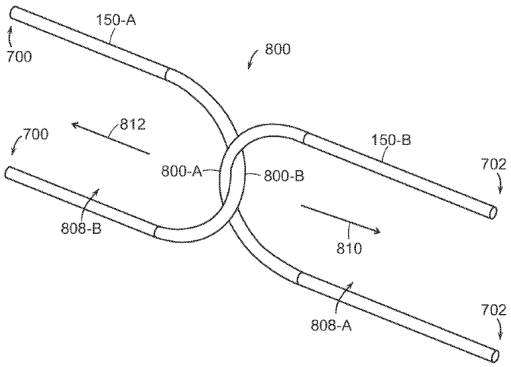

FIG. 9

Ex. 1001, Figs. 6–9. Figures 6–9 above show a variety of filament configurations, including a single loop (Fig. 6), or "the filament 150 can comprise multiple filaments . . . as shown in FIGS. 7 through 9." *Id.* at 13:6–8, 13:29–36 (describing "single loop 604" and "multiple loops" (704, 706) embodiments as depicted in Figs. 6 and 7, respectively). As the patent explains, "a diameter or size of the loop 604, or of the loops 704, 706 can decrease when the constricting mechanism 141 is moved from the second configuration to the first configuration." *Id.* at 13:38–41. Figures 8 and 9 depict a filament comprising first and second interlocking "bights" 800A, 800B for extending around respective portions of an elongate member. *Id.* at 13:42–63 (disclosing that the first and second bights can "interlock" or be "non-interlocking"). According to the patent, bights 800A and 800B define

an "encircled area 814" into which the elongate member can be received; movement of bights 800A and 800B in the directions indicated by arrows 812 and 810 "decreases the size of the encircled area 814 and constricts, collapses, and/or seals the elongate member 132 extending through the encircled area." *Id.* at 13:55–14:17.

D. Illustrative Claims

Petitioner challenges claims 1–9. Claim 1 is the only independent claim. It reads:

> 1. A valve, comprising:
>
> a tubular member defining a lumen configured to slidably receive a catheter;
>
> a constricting mechanism including at least one filament and an actuator coupled to the filament, the filament comprising a first portion extending around at least a portion of the tubular member and a second portion having a first end extending from the first portion in one direction and a second end extending from the first portion in another direction, and the actuator comprises a first member coupled to the first end of the filament and a second member coupled to the second end of the filament, wherein the first member and the second member of the actuator are moveable between (a) a first position wherein the filament circumferentially constricts the lumen to create a seal and (b) a second position wherein the filament is moved to at least partially open the lumen; and
>
> a biasing system configured to bias the first member and the second member to the first position.

Ex. 1001, 22:20–39. To illustrate the subject matter of some of the dependent claims, claims 2 and 3 depend from claim 1 and, respectively, add that "the tubular member is pliable" and "the first portion of the filament extends in a loop completely around the tubular member." *Id.* at 22:40–44.

E. Prior Art and Asserted Grounds

Petitioner asserts that claims 1–9 are unpatentable based on the following grounds:

Grounds	Claims Challenged	35 U.S.C. §[5]	Reference(s)/Basis
1	1–9	102	Schaffer[6]
2	1–9	103	Schaffer
3	1–9	103	Schaffer, Hartley[7]
4	1–9	103	Schaffer, Eller[8]
5	1–3, 5, 6, 9	103	Hartley, Eller

Petitioner also relies on testimony from Troy L. Thornton in support of its challenge. Ex. 1003; Ex. 1014. In response, Patent Owner relies on testimony from Paul J. Zalesky, Ph.D. Ex. 2008.

[5] The Leahy-Smith America Invents Act ("AIA"), Pub. L. No. 112–29, 125 Stat. 284, 285–88 (2011), revised 35 U.S.C. §§ 102, 103 effective March 16, 2013. Based on the uncontested assertion that September 6, 2017, is the earliest possible priority date for the '011 patent, we apply the AIA versions of §§ 102 and 103 in this Decision. Pet. 12–13.

[6] Schaffer et al., US 2003/0225379 A1, published Dec. 4, 2003 (Ex. 1005 ("Schaffer")).

[7] Hartley, US 2003/0116731 A1, published June 26, 2003 (Ex. 1006 ("Hartley")).

[8] Eller, US 9,980,813 B2, issued May 29, 2018 (Ex. 1007 ("Eller")). Petitioner notes that Eller published October 29, 2015. Pet. 15; *see* Ex. 1007, code (65).

Deposition testimony from Mr. Thornton and Dr. Zalesky is also of record. Ex. 1015 ("Zalesky Tr."); Exs. 2005, 2007, 2010, 2011 (Thornton transcripts).

III. ANALYSIS

A. Legal Standards

"In an [*inter partes* review], the petitioner has the burden from the onset to show with particularity why the patent it challenges is unpatentable." *Harmonic Inc. v. Avid Tech., Inc.*, 815 F.3d 1356, 1363 (Fed. Cir. 2016) (citing 35 U.S.C. § 312(a)(3)).

"[T]he dispositive question regarding anticipation [i]s whether one skilled in the art would reasonably understand or infer from the [prior art reference's] teaching that every claim element was disclosed in that single reference." *Dayco Prods., Inc. v. Total Containment, Inc.*, 329 F.3d 1358, 1368 (Fed. Cir. 2003) (quoting *In re Baxter Travenol Labs.*, 952 F.2d 388, 390 (Fed. Cir. 1991)) (emphasis omitted). "Because the hallmark of anticipation is prior invention, the prior art reference—in order to anticipate under 35 U.S.C. § 102—must not only disclose all elements of the claim within the four corners of the document, but must also disclose those elements arranged as in the claim." *Net MoneyIN, Inc. v. VeriSign, Inc.*, 545 F.3d 1359, 1369 (Fed. Cir. 2008) (internal quotation marks omitted).

A claim is unpatentable under 35 U.S.C. § 103 if the differences between the claimed invention and the prior art are such that the claimed invention as a whole would have been obvious at the time the invention was made[9] to a person having ordinary skill in the relevant art. *KSR Int'l Co. v.*

---

[9] The AIA revised § 103 such that obviousness is assessed "before the effective filing date of the claimed invention," but *KSR* and other

Teleflex Inc., 550 U.S. 398, 406 (2007). The question of obviousness is resolved on the basis of underlying factual determinations including: (1) the scope and content of the prior art; (2) any differences between the claimed subject matter and the prior art; (3) the level of ordinary skill in the art; and (4) secondary considerations (i.e., objective indicia) of nonobviousness when presented.[10] *Graham v. John Deere Co.*, 383 U.S. 1, 17–18 (1966). "An obviousness determination [also] requires finding both that a skilled artisan would have been motivated to combine the teachings of the prior art references to achieve the claimed invention, and that the skilled artisan would have had a reasonable expectation of success in doing so." *CRFD Rsch., Inc. v. Matal*, 876 F.3d 1330, 1340 (Fed. Cir. 2017) (internal quotation marks omitted).

B. Level of Ordinary Skill in the Art

Petitioner proposes that the person of ordinary skill in the art ("POSA") in September 2017 "would have had an undergraduate degree in mechanical engineering or a related engineering discipline and 2–4 years of product design or engineering experience." Pet. 13 (citing Ex. 1003 ¶ 35).

Patent Owner counters that a POSA "would have had an undergraduate degree in mechanical engineering or a related engineering discipline and 2 to 4 years of product design or engineering experience designing medical devices in the field of the '011 Patent." PO Resp. 22

---

obviousness precedents cited herein remain applicable despite this change in the timing of the obviousness inquiry.

[10] Petitioner states that it is not aware of any objective indicia of nonobviousness (Pet. 84) and Patent Owner does not provide argument about any objective indicia. *See generally* PO Resp.; Ex. 2008 ¶ 197 (indicating no "opinions on secondary considerations").

(citing Ex. 2008 ¶¶ 68–69). Patent Owner critiques Petitioner's proposed POSA level as lacking specificity because it "omits any experience in designing medical devices at all, let alone in the field of the '011 Patent." *Id.* Patent Owner urges that "experience in the field of the invention," which Patent Owner contends is hemostasis valves for use in intravascular procedures, "is critical." *Id.* According to Patent Owner, Petitioner's arguments relying on a declaration from Mr. Thornton based on an allegedly "incomplete perspective" should be given little weight. *Id.* at 23.

The parties propose essentially the same formal educational background for the POSA, but we agree with Patent Owner that Petitioner's proposed POSA definition lacks some specificity concerning the POSA's work experience. That definition, if interpreted generically, could mean that a person qualifies as a POSA if they had, for example, a B.S. in mechanical engineering and only two years of experience designing *any type of product in any field*. That is too broad.

We find that a POSA would have had the agreed-upon educational credentials—an undergraduate degree in mechanical engineering or a related engineering discipline. Ex. 1003 ¶ 35; Ex. 2008 ¶ 68.

We also find that a POSA would have had 2–4 years of design or engineering experience related to products in the field of the invention, which involves endovascular devices and the surgical procedures that use such devices. Ex. 1001, 1:21–57 (background of the invention). Such devices include, but are not necessarily limited to, hemostasis valves and catheters for minimally-invasive vascular surgeries. *Id.* And, consistent with the testimony of the parties' experts, the POSA need not have had firsthand experience *designing* hemostasis valves. *See, e.g.*, Ex. 1015 (Zalesky Tr.), 72:11–73:7 (testifying direct experience "designing"

hemostasis valves or aspiration catheters is not necessary, but "general experience with vascular devices and procedures" is required); Ex. 2007 (Thornton Tr.), 180:13–19. Further, as Dr. Zalesky testified, the POSA's experience related to such devices "could be as simple as bench testing and looking at clinical data." Ex. 1015, 74:5–75:1. Lastly, a POSA would have had an understanding of such devices' design requirements as determined by the needs of the physician, patient, and procedure, which understanding may be informed by work experience and/or study. Ex. 2007, 24:5–21.

The parties' declarants both possess at least the qualifications of a POSA and each is capable of credibly testifying about the issues in dispute from the POSA's standpoint as defined above. Ex. 1003 ¶¶ 5–14 (describing background and qualifications); Ex. 2008 ¶¶ 8–20 (same). Although Patent Owner argues Mr. Thornton opines about anticipation and obviousness by applying a proposed POSA level that is lower (i.e., invoking more general engineering experience or principles), allegedly entitling Mr. Thornton's testimony to less weight, we have considered Patent Owner's argument when weighing the experts' competing opinions.

C. Claim Construction

In *inter partes* review, we construe claims using the same claim construction standard used to construe claims in a civil action before the courts under 35 U.S.C. § 282(b), including construing claim language in accordance with its ordinary and customary meaning as understood by the POSA, in view of the patent's specification and considering the patent's prosecution history. 37 C.F.R. § 42.100(b). We need only construe terms where the parties dispute the terms' meanings and only to the extent needed to resolve the controversy. *Realtime Data, LLC v. Iancu*, 912 F.3d 1368, 1375 (Fed. Cir. 2019).

The parties dispute the meaning of the term "filament," which appears in each of the challenged claims. Pet. 13–14 (proposing a construction for the term "filament" and stating "[n]o other terms of the '011 patent require construction"); PO Resp. 24–35. Petitioner argues that a filament "mean[s] at least 'one or more threads, lines, cords, ropes, ribbons, flat wires, sheets, or tapes.'" Pet. 14. In response, Patent Owner contends that the claimed filament "should be accorded its plain and ordinary meaning, 'a thin, flexible length of material formed by one or more strands of material." PO Resp. 24.

As we discuss in more detail below, the core claim construction dispute is whether the filament must be flexible. This dispute is especially relevant to Grounds 1 and 2, where Schaffer is the only asserted reference. *See supra* Section II.E. According to Patent Owner, because a filament is flexible, Schaffer's "rigid" actuating members are not a filament and, thus, Petitioner has not shown that Schaffer discloses all elements of the claimed valves. *See, e.g.*, PO Resp. 39–45. Conversely, for Grounds 3–5 there is no dispute that a "filament" is disclosed in the art supporting those grounds, for example, Schaffer combined with Hartley (Ground 3). Pet. 33–36 (citing Hartley's "string" as the alleged filament (Ex. 1006 ¶ 31, Fig. 3 (depicting string 14)); Ex. 1006 ¶ 17 ("The flexible member may be a string, suture or band or other suitable material.")).

Claim 1 is directed to a valve and recites, in part, "a constricting mechanism including at least one ***filament*** and an actuator coupled to the filament." Ex. 1001, 22:23–24 (emphasis added). As required by other parts of the claim, one portion of the filament extends at least partially around the tubular member and the filament's end portions are coupled, respectively, to first and second members of the actuator (e.g., opposing spring-actuated buttons), which actuator members are moveable from a first

to a second position. *Id.* at 22:20–39. The valve is designed such that, in operation, when the valve's actuator members are in the first position, those members place the filament under tension, pulling the filament's ends, such that "the filament circumferentially constricts the lumen [of the tubular member] to create a seal." *Id.*[11]

According to Petitioner, the '011 patent "is using the term 'filament' more broadly than the plain and ordinary meaning." Pet. 13. Petitioner cites the Specification's disclosure that "[t]he filament can be made from a variety of materials including, for example, a polymer, a synthetic, and/or a metal," that "the filament can comprise a single strand . . . [or] a plurality of strands that can be, for example, twisted, woven, grouped, and/or fused to form the filament," and that "the filament 150 can comprise one or several threads, lines, cords, rope, ribbon, flat wire, sheet, or tape." *Id.* at 14 (citing Ex. 1001, 9:10–20). From those disclosures, Petitioner argues the "filament" should be construed to mean "one or more threads, lines, cords, ropes, ribbons, flat wires, sheets, or tapes." *Id.*

Patent Owner does not dispute that the claimed "filament" may comprise the structures listed in Petitioner's proposed construction (one or more threads, wires, etc.). PO Resp. 24–25. Patent Owner contends, however, that "the plain meaning of the term filament requires flexibility."

---

[11] The '011 patent uses "tensioning mechanism" and "constricting mechanism" interchangeably. *See, e.g.*, Ex. 1001, 2:20–24 ("[T]he tensioning mechanism is moveable between a first configuration in which the central lumen is constricted and sealed and a second configuration in which the central lumen is open."), 6:13–20 ("The constricting mechanism can be moved from a first configuration to a second configuration, and the constricting mechanism can collapse and/or seal the central lumen when the constricting mechanism is in the first configuration.").

Id. (citing, e.g., Ex. 2005 (Thornton Tr.), 122:17–21, 123:1–3 (agreeing the plain meaning of a filament is something thin and flexible)).

Patent Owner contends that the intrinsic and extrinsic evidence supports its interpretation that filaments are characteristically flexible. PO Resp. 27–29 (citing, e.g., Ex. 1001, 9:56–59 (disclosing "the filament 150 is ***loosened***, thereby allowing expansion of the elongate member"); Ex. 2008 ¶ 77 (testifying a POSA "would understand that when the filament is 'loosened,' the filament slackens and relaxes as tension is decreased")), 32–33 (citing, e.g., Ex. 2002, 467 (dictionary defining a "filament" as "a thin flexible threadlike object, process, or appendage")). Patent Owner argues that each of the '011 patent's examples and illustrative structures (e.g., threads, rope, wire) is consistent with a plain and ordinary meaning where a filament requires flexibility. *Id.* at 26–30 (citing, e.g., Ex. 1001, Figs. 6–8; Ex. 2007 (Thornton Tr.), 131:16–132:12 (admitting each of the disclosed structures could be used as filaments and "be sufficiently flexible" to function in the hemostasis valve)).

Against this backdrop, Patent Owner argues that Petitioner fails to show the '011 patent's inventors acted as their own lexicographer to redefine the term "filament" such that it would read on rigid, inflexible materials. PO Resp. 24–25 (citing law for the proposition that lexicography is an exacting standard that "requires clear and unambiguous disclosure sufficient to depart from the plain and ordinary meaning").

As an initial matter, we agree with Petitioner that a "filament" as claimed encompasses one or more threads, lines, cords, rope, ribbon, flat wire, sheet, or tape. The '011 patent lists those as example structures. Ex. 1001, 9:19–20 ("In some embodiments, the filament 150 can comprise one or several threads, lines cords, rope, ribbon, flat wire, sheet, or tape.").

That does not, however, resolve the dispute about "flexibility." On that issue, after considering the full record developed through trial, we agree with Patent Owner that a "filament" as claimed is flexible.

On balance, the evidence supports Patent Owner's interpretation. Patent Owner cites the claim language, including the recitation that "the filament *circumferentially constricts* the lumen to create a seal," which Dr. Zalesky opines a POSA would have understood as implying a flexible structure. PO Resp. 25–26; Ex. 2008 ¶¶ 71–76 (testifying, *inter alia*, that "[t]o 'circumferentially constrict,' the filament must be flexible and extend circumferentially about the lumen" such that "the filament will adapt to the shape of the lumen as the lumen is constricted and thus 'circumferentially constrict' the lumen as recited in Claim 1").[12] The Specification also describes the filament as being selectively "tightened" and "loosened" about the elongate member. Ex. 1001, 9:37–40, 9:55–59 (teaching "the filament 150 is tightened" when the actuator is released and "the filament 150 is loosened" when the actuator is pressed to open the valve)). Dr. Zalesky opines that a POSA would have understood the patent's description of

[12] The filament is part of claim 1's recited "constricting mechanism," which phrase the '011 patent uses interchangeably with "tensioning mechanism." Ex. 1001, 7:61–62 (describing "a constricting mechanism 141, also referred to herein as a tensioning mechanism 141"). As we noted when construing the claims of the '011 patent's parent in related proceedings, "tensioning" is more consistent with the view that the filament is flexible. Ex. 1021 (Institution Decision in IPR2025-00728), 15; *see SightSound Techs., LLC v. Apple Inc.*, 809 F.3d 1307, 1316 (Fed. Cir. 2015) ("Where multiple patents derive from the same parent application and share many common terms, we must interpret the claims consistently across all asserted patents.") (internal quotation marks omitted). The '011 patent issued from a child application to the application that issued as the '921 patent challenged in the 728 IPR.

loosening the filament as meaning that the "filament slackens and relaxes as tension is decreased and the elongate member expands against the filament as it loosens" (citing Ex. 2009 (Merriam-Webster's Collegiate Dictionary), 735 (defining "loose" as "not tightly drawn or stretched: slack" and "being flexible or relaxed")). This evidence is more consistent with an interpretation where the filament is characteristically flexible, not rigid.

Petitioner, in reply, argues that to "loosen" can also mean to "release from restraint" and that "inflexible items can be loosened," including screws and bolts. Pet. Reply 18–19 (citing Ex. 2009). According to Petitioner, Patent Owner's expert agrees that some inflexible materials can be loosened. *Id.* (citing Ex. 1015, 116:12–17).

As context is key, Petitioner's counterargument is unpersuasive. Although Dr. Zalesky testified that "I guess you could loosen a nut from a bolt," he continued that such action relies on "[v]ery different mechanisms" from what the patent describes related to a filament. Ex. 1015, 116:12–17. He further explained that, even if "you could apply [the word] 'loosened' to a rigid nut and bolt, . . . that's a dramatically different context than a hemostasis context." *Id.* at 116:18–117:7. The '011 patent uses the word "loosen" in conjunction with the action of a *filament*, which Petitioner's expert admits has "flexibility" according to the term's ordinary meaning and that the patent discloses may be comprised of exemplary and ordinarily flexible structures like thread, wire, or ribbon. Ex. 2005, 123:1–3 ("Q. Does a filament have to be flexible? A. I think in the ordinary meaning of filament, it has flexibility."). Petitioner directs us to nothing in the patent plainly describing *inflexible* structures as a "filament" or that is otherwise sufficient to clearly and unambiguously redefine the plain and ordinary meaning of that term to cover such structures.

Additional disclosures in the ’011 patent further support Patent Owner’s interpretation. The patent’s “loop” embodiments, where the filament forms one or more loops like described with Figure 6 and Figure 7, *necessarily* require a flexible structure. Ex. 1001, Figs. 6–7 (filament 150, with sub-filaments 150-A and 150-B); Ex. 2008 ¶ 79 (testifying Figure 6’s filament “could not work as intended” if it was inflexible). That is, if the filament of Figures 6 or 7 were somehow rigid, applying a force that seeks to pull the respective ends of the filament in opposing directions would not decrease the size of the loop—the loop would stay the same size and the filament would not circumferentially constrict and seal the elongate member’s lumen as described in the patent. Ex. 1001, 13:38–41.

Whether the filament in the patent’s “bight” embodiments (e.g., as shown in Figures 8 and 9) must be flexible is less clear. *See* Ex. 1001, Figs. 8–9 (similar to the loop embodiments, depicting structures 150-A and 150-B forming sub-filaments of the bight(s)). Patent Owner and Dr. Zalesky say that a POSA would have understood that the bights are flexible. Ex. 2008 ¶ 80 (testifying that, when those filaments loosen, slack would be induced in each bight (citing Ex. 2009, 120 (defining a bight as a “slack part or loop in a rope”)); PO Sur-reply 10 (arguing that, if the bights were inflexible, they would need to be rotated in opposite directions when pulled, which the patent does not describe or show). And there is a dearth of persuasive evidence from Petitioner to show why a POSA would have understood the bights as encompassing rigid structures. Pet. Reply 15–16 (arguing that the patent does not show or state that the bights slacken). It is true that neither Figure 8 nor Figure 9 show any “slackening” of the filament forming the bights. Pet. Reply 15–16 (citing Ex. 1001, Figs. 8–9). But Figures 8 and 9 do not show the bights interacting with additional structures,

such as the elongate member, so it is difficult to conclude from those stand-alone figures (or related description) that rigid bights are described. Also, as Mr. Thornton admits, that a filament could be made from certain materials described in the patent (e.g., synthetics or metals) does not, absent more information, lead to a conclusion that a filament is rigid. Ex. 2007, 125:2–126:17 (testifying "the relative stiffness or rigidity is not clear from those . . . materials without knowing much more information"), 131:25–132:12 (testifying "you would need to know more details about the material and the dimensions and the construction of those materials to be able to quantify or compare relative flexibility of one element versus another"). There is little on this record beyond conjecture to suggest that "inflexible" filaments are embraced by the bight embodiments of the '011 patent. Critically, the patent does not describe any inflexible filament structures in any detail (even if a rigid bight was theoretically possible) or unambiguously redefine the term filament to have a broader meaning that would read on inflexible structures.

The extrinsic evidence supports Patent Owner's interpretation of a "filament" as requiring flexibility. Both parties' experts testify that a filament is, according to its plain and ordinary meaning, flexible. Ex. 2008 ¶ 72 (testifying the "plain and ordinary meaning" is "a 'thin, flexible length of material formed by one or more strands of material"); Ex. 2005, 123:1–3 (Mr. Thornton, conceding at deposition in related court proceedings that, "in the ordinary meaning of filament, it has flexibility"). Patent Owner cites dictionaries defining a filament as "a single thread or a thin flexible threadlike object, process, or appendage" and "a slender threadlike object or fiber." PO Resp. 32 (citing Ex. 2002 (Merriam-Webster Collegiate Dictionary), 467; Ex. 2003 (New Oxford American Dictionary), 644). And Mr. Thornton's own patent related to an endoluminal prosthesis for vascular

procedures equates a "filament" with a "thread-like element" that can be "laced or threaded" through other structures. *Id.* at 32–33 (citing Ex. 2006 (Thornton patent), Fig. 1 (showing coupling member 104), 8:7–9 ("coupling member 104 is shown as a filament or thread-like element"), 8:53–54, 9:18–22 (disclosing the threadlike coupling member/filament can be made of synthetics (e.g., polyaramids such as KEVLAR) or metals (e.g., metal wire comprising nitinol or stainless steel)).

Petitioner criticizes Patent Owner's reliance on dictionary definitions and contends that such definitions do not justify Patent Owner's proposed construction. Pet. Reply 18 (arguing one definition (Ex. 2003) does not mention "flexibility" and the other (Ex. 2002) excludes structures in the '011 patent, like ribbon and tape). But this criticism is unavailing. A "slender threadlike object or fiber" suggests flexibility without expressly stating it. Ex. 2003, 644. We also see no adequate evidentiary basis to conclude that a POSA would have interpreted the structures (e.g., ribbon, wire, or tape) allegedly excluded from another dictionary definition as comprising rigid structures. Patent Owner's cited dictionary definitions are consistent with an interpretation of filament that requires flexibility and Petitioner provides no persuasive evidence to the contrary.

Petitioner's argument in reply that the '011 patent never expressly uses the word "flexible" to describe the filament is true but not decisive. Pet. Reply 14. Neither does the patent use the words "rigid," "inflexible," or the like to describe a filament. And Petitioner does not account persuasively for the intrinsic and extrinsic evidence discussed above, which would require flexibility or is at least more indicative that, in its plain and ordinary meaning, a filament is flexible.

Lastly, Petitioner argues that Patent Owner's proposed construction requiring that the filament be flexible injects ambiguity into the claims (as a relative term) and, thus, should be rejected. Pet. Reply 14–18 (citing the Board's reluctance at the institution stage (Inst. Dec. 15) to adopt Patent Owner's interpretation citing a potential for ambiguity); *see also id.* (citing Ex. 1015 (Zalesky Tr.), 108:9–11 ("I don't believe that '011 [patent] teaches a very specific measurement of the tensile properties."), 107:7–108:14 (testifying on "qualitative," "trial and error" means to determine if a material had flexibility sufficient to function as the claimed filament)).

The evidence developed through trial indicates, however, that a POSA would have reasonably understood the flexibility needed for the claimed valves to work as described. *See, e.g.*, Ex. 2008 ¶ 84 (testifying the filament would be flexible to the degree needed to loosen or slacken when the actuator is depressed). Indeed, Mr. Thornton admitted that a POSA would have had the skill needed to determine an appropriate level of flexibility for the filament (along with the material properties for the other components):

> Q . . . So that level of flexibility, in this context of a hemostasis valve for an aspiration catheter, one skilled in the art would be able to determine what the level of flexibility is, wouldn't they?
>
> THE WITNESS: I think a person skilled in the art would be able to engineer the right balance of material properties for the filament, the compression tube, or tubular sidewall, the springs, et cetera, in order to make the design work well.

Ex. 2010 (Thornton Tr.), 38:22–39:7 (objection omitted); *see also id.* at 44:14–20 (testifying, in response to the question "a person of ordinary skill in the art in 2017 would [have] understood what that level of flexibility would be, wouldn't they?" that "I think they could figure it out").

For the reasons above, we conclude that the evidence supports Patent Owner's position and a POSA would have understood the plain and ordinary meaning of a "filament" as a flexible length of material (e.g., one or more string(s), wire(s), tape(s)).[13]

D. Asserted References

Petitioner asserts, and Patent Owner does not dispute, that Schaffer, Hartley, and Eller are each prior art under 35 U.S.C. § 102(a)(1). Pet. 15.

1. Schaffer (Ex. 1005)

Schaffer is a U.S. patent application that published December 4, 2003. Ex. 1005, code (43). Schaffer is titled "Composite Stasis Valve" and describes a "valve for blocking the flow of gas or fluid with or without an instrument in place within the gas/fluid path." *Id.* at Abstr.; *see also id.* ¶¶ 2–3 (disclosing that Schaffer "relates to catheters, in particular to composite fluid-stasis valves for use with catheters" and "[f]luid stasis mechanisms are commonly used to prevent loss of fluids from the insertion site of a catheter").

An embodiment of Schaffer's fluid-stasis valve, including Petitioner's uncontested annotations, is shown below.

[13] We need not adopt Patent Owner's inclusion of the words "thin" or "strands" in its proposed construction to resolve the controversy before us. PO Resp. 24.

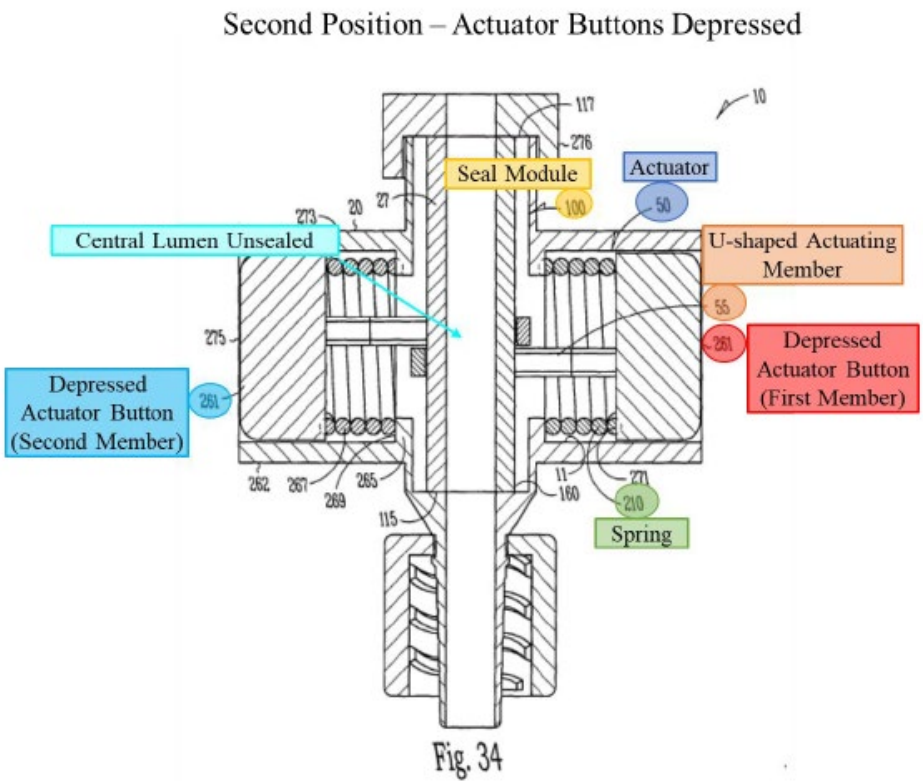

Pet. 25 (Ex. 1008, Fig. 34[14] (annotated)); Ex. 1005, Fig. 34, ¶ 75 ("FIGS. 30–34 illustrate one embodiment of the stasis valve 10 including a seal module 100 having a lumen sized to allow the passage of fluids or gases."); Ex. 1008, 15–19 (Figs. 30–34). Schaffer's Figure 34, above, is a cross-sectional view of a stasis valve 10, where actuator buttons 261 (red and blue highlights) are depressed, causing seal module 100 (yellow highlight) to take on an "uncollapsed configuration" such that a central lumen (teal highlight) is unsealed. Ex. 1005, Fig. 34, ¶¶ 75–77; Ex. 1008, 19. Schaffer discloses that actuator 50 (dark blue highlight) "include[s] an actuating member 55 which, in one option, is U-shaped" (orange highlight). Ex. 1005 ¶ 76; *see also* Ex. 1008, 18 (perspective view of valve 10, showing U-shaped actuating members 55). Schaffer teaches that the actuating members may

[14] Petitioner cites drawings from Schaffer submitted during prosecution of that application due to those drawings' improved clarity. Ex. 1008.

comprise aluminum or plastic. Ex. 1005 ¶¶ 81, 82 (actuating members and buttons may, for example, be machined from aluminum).

Although not shown in Figure 34 reproduced above, when the actuator buttons of Schaffer's illustrative embodiment are released, the stasis valve is in a closed or sealed configuration. Ex. 1005 ¶ 77, Fig. 32 (showing the valve in a closed configuration where a central portion of containment structure 160 is collapsed by U-shaped actuating members moving in opposing directions under the force of springs 210). Schaffer discloses that, in the first/closed position, the actuating members 55 "are, in one option, disposed at least partially circumferencially [*sic*] disposed about" the seal module "depressing and at least partially collapsing a portion 108 of the containment structure 160 by a compressive force 67 (e.g., by a spring 210)." *Id.* ¶ 77 ("The lumen 193 of the third seal member 165 is at least partially collapsed by the compressive force 67").

2. Hartley (Ex. 1006)

Hartley is a U.S. patent application that published June 26, 2003. Ex. 1006, code (43). Hartley is titled "Access Valve" and, in general, relates to an access valve for laparoscopic or intralumenal deployment devices. *Id.* at Abstr., code (54); *see also id.* ¶ 3 ("The invention will be discussed in . . . relation to fluid flow prevention and access valves in medical applications for instance where it is desired to seal around a catheter or other instrument . . . to prevent loss of blood or other fluid.").

Hartley's Figure 5 is reproduced below.

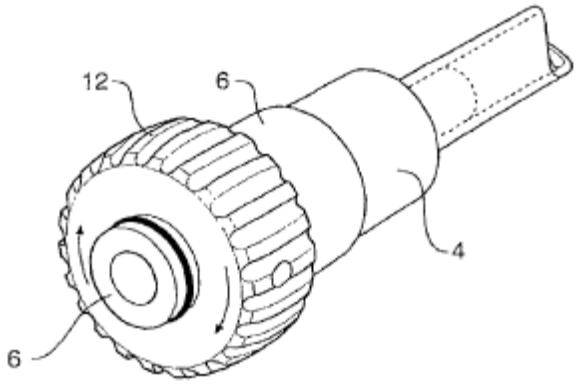

Fig 5

Ex. 1006, Fig. 5. Figure 5 above is a perspective view of an illustrative delivery catheter and constriction valve described in Hartley. *Id.* ¶ 29. The valve includes, *inter alia*, catheter body 4, cylindrical housing 6, and rotary actuator 12. *Id.* ¶ 31.

The action of Hartley's valve is more clearly seen in Figures 3 and 4, reproduced side-by-side below.

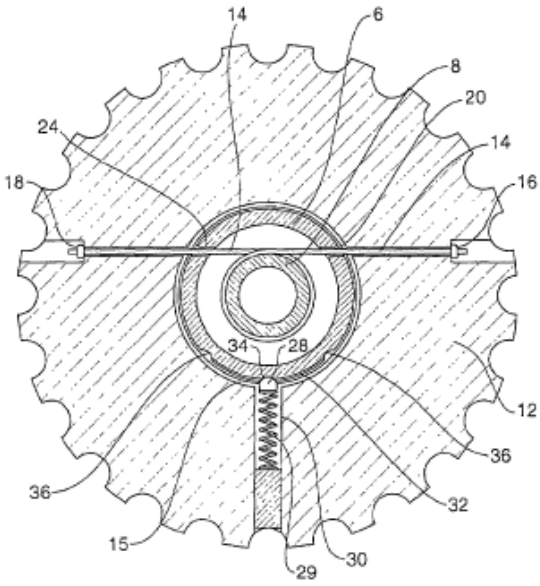

Fig 3

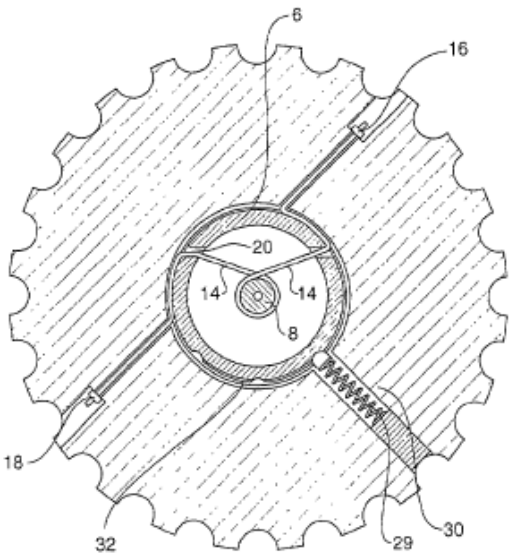

Fig 4

Ex. 1006, Figs. 3–4. Figures 3 and 4 of Hartley are top, cross-sectional views of a constriction valve, showing, respectively, the valve in an open and closed configuration. *Id.* ¶¶ 27–28, 31–34. In the open configuration (above left), rotary actuator 12 is mounted to cylindrical housing 6, and a string 14 mounted to portions of rotary actuator with knots 16, 18. *Id.* ¶ 31. String 14 (or another suitable flexible member) is wound around a cylindrical elastomeric diaphragm 8. *Id.*; *see also id.* ¶¶ 16–17 ("The flexible member may be a string, suture or band or other suitable material").

Hartley teaches that "[r]otation of the rotary actuator 12 with respect to the cylindrical housing 6 will cause the string 14 to be pulled in both directions at once and hence the cylindrical diaphragm 8 to be constricted" and sealed as shown in Figure 4 (above right). *Id.* ¶¶ 31, 34. According to Hartley, its invention provides "an access or constriction valve arrangement which will close over a range of diameters of devices passed through the valve or can close completely down to be self[-]sealing." *Id.* ¶ 37.

3. Eller (Ex. 1007)

Eller is a U.S. patent that issued May 29, 2018, and indicates a publication date of October 29, 2015. Ex. 1007, codes (45), (65). Eller relates, in general, to "[s]elective fluid barrier valve devices" and methods of treatment using such medical devices. *Id.* at Abstr., 1:13–16.

Eller discloses that "[a]n embodiment of a selective fluid barrier device comprises a housing, an actuator, a sleeve, a wire member, and a connector." *Id.* at Abstr. "The sleeve defines a passageway that extends through the [valve]" and [t]he actuator is movable between a first position and a second position" where the first position allows fluid to pass through the sleeve and, in the second position, fluid is prevented from passing. *Id.*

An embodiment of Eller's selective fluid barrier valve device is shown in Figure 15 below.

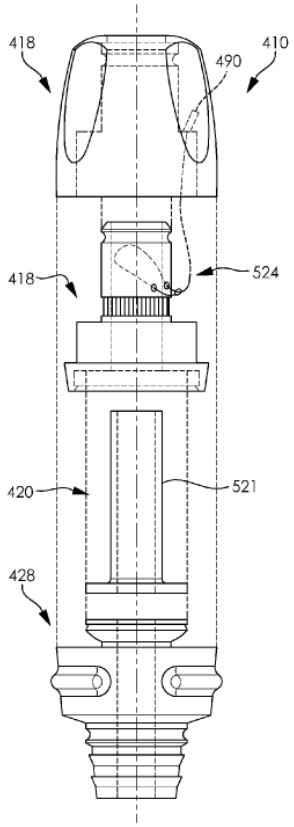

FIG. 15

Ex. 1007, Fig. 15; *see also id.* Figs. 1–2 (perspective and exploded views of similar valve device). Figure 15, reproduced above, is an exploded view of an illustrative selective fluid barrier valve of Eller. The valve device 410 includes, among other features, actuator 418, sleeve 420, and a wire member 422 (not labeled) with a first end 524 attached to actuator 418 within cavity 490. *Id.* at 21:37–22:24 ("wire member can be positioned such that it extends at least one full revolution around the outer surface of the sleeve"); *see also id.* at Figs. 16–17 (showing wire 422 looped around sleeve 420 within housing 416). As disclosed in Eller, movement (e.g., rotation) of the actuator from its first position to its second position pulls the wire member to constrict and close sleeve 420. *See, e.g.*, *id.* at 22:25–31, 1:55–2:6

(disclosing that, in the second configuration, "the sleeve passageway is closed and prevents fluid from passing"). Eller further teaches that the valve device can "be biased to the second [(closed)] configuration" by, for example, using a spring. *Id.* at 19:22–30.

Eller teaches that its disclosure can be applied to many types of actuators and is not limited to rotary actuators. *Id.* at 8:27–44. According to Eller, "while a rotatable member 29 has been illustrated, a selective fluid barrier valve device can include any suitable actuator capable of moving . . . between a first configuration and a second configuration. Skilled artisans will be able to select a suitable actuator" and "[e]xample actuators . . . include rotatable actuators, linear actuators, slidable actuators . . . and any other actuator considered suitable for a particular embodiment." *Id.*

Eller discloses that a "wire member . . . can have any suitable structure and comprise any suitable number of strands and/or fibers that are twisted, or otherwise interconnected to one another." *Id.* at 15:61–16:6 (teaching "wire member can comprise a suture or a cable"). Eller further discloses that "[a]ttachment between a wire member and a housing and/or an actuator can be accomplished using any suitable method or technique" including, for example, "adhesives, welding, [or] fusing." *Id.* at 14:37–53.

E. Ground 1: Anticipation by Schaffer

1. Petitioner's Contentions

Petitioner contends that Schaffer describes a valve having all the elements of claims 1–9, and, thus, anticipates those claims. Pet. 16–32 (claim 1, preamble, tubular member, and the constricting mechanism and "filament" limitations), 49–50 (biasing system), 51–70 (dependent claims); Ex. 1003 ¶¶ 54, 57–59, 62–74, 101–103 (Thornton analysis for claim 1's

limitations). We focus on claim 1 below, noting again that all the challenged claims require a valve comprising, among other features, a "filament."

According to Petitioner, Schaffer discloses a hemostasis valve with the "same components, in the same arrangement, as the valve claimed in the '011 patent." Pet. 16–17. Petitioner provides a side-by-side comparison of illustrative valves of the '011 patent and Schaffer as shown below.

'011 Patent | Schaffer

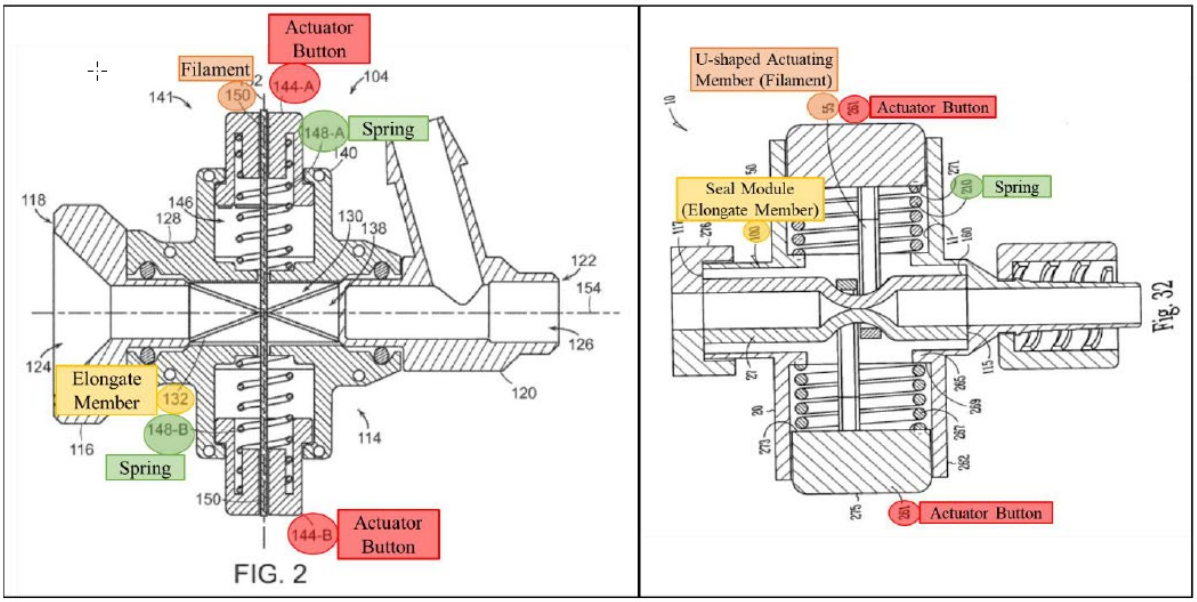

Id. (Petitioner's annotated versions of Fig. 2 of the '011 patent and Schaffer's Fig. 32).[15] The image above includes cross-sectional views of

[15] Petitioner, throughout its analysis, uses a version of the Schaffer drawings (Ex. 1008) filed during prosecution of the published Schaffer application (Ex. 1005) "because [those] drawings are clearer than the drawings in the published application." Pet. 17 n.2 (asserting "[t]he drawings [in Ex. 1008] became publicly available when Schaffer was published on December 4, 2003"); *compare* Ex. 1005, Fig. 32, *with* Ex. 1008, Fig. 32. Notwithstanding Patent Owner's motion to exclude Exhibit 1008, we also use the clearer drawings from Exhibit 1008 and assume, for this analysis, that such drawings are usable to support a ground based on anticipation by Schaffer. Paper 28, 8–9 (arguing "Exhibit 1008 should be excluded . . . because it is not part of the Schaffer Publication").

two valves—the valve of Figure 2 of the ’011 patent (above left) compared to the valve in Schaffer’s Figure 32 (above right), with Petitioner’s highlighting of the alleged elongate/tubular member (yellow), filament (orange), actuator buttons (red), and springs (green) in the respective valves.

Petitioner argues that Schaffer’s valve as shown in Figure 32 above meets claim 1’s preamble (if limiting) and “tubular member” limitations. Pet. 19–21 (citing Ex. 1005 ¶¶ 2, 46, 49, 51, 54–55, 75, Figs. 12, 32, 34 (showing, e.g., valve 10 comprising seal module 100 that defines a central lumen); Ex. 1003 ¶¶ 58–63). Petitioner also argues that Schaffer discloses a “biasing system” as in claim 1, citing Schaffer’s resilient members/springs that bias the respective actuator buttons toward a first (i.e., closed) position to seal fluid flow through the valve. *Id.* at 49–50 (citing Ex. 1005 ¶¶ 76–77, Fig. 31, Fig. 32 (annotated); Ex. 1003 ¶¶ 101–103). Patent Owner does not dispute that Schaffer discloses the preamble, tubular member, or biasing system limitations of claim 1.[16]

Petitioner also contends that Schaffer describes claim 1’s “constricting mechanism,” including the recited “filament.” Pet. 21–32 (addressing the constricting mechanism limitations, including “at least one filament,” and actuator “member[s]” coupled to ends of the alleged filament). Petitioner argues the “filament” is met by Schaffer’s two U-shaped actuating members, which “collectively” form a filament with first and second ends coupled to opposing actuator buttons (alleged first and second actuator members). *Id.*

[16] The record supports that Schaffer discloses the preamble language, whether or not the preamble limits the claims.

Petitioner's annotations to Schaffer's Figures 31 and 32, reproduced below, better illustrate Petitioner's position related to the claimed filament, its first and second ends, and coupling of the ends to the actuator buttons.

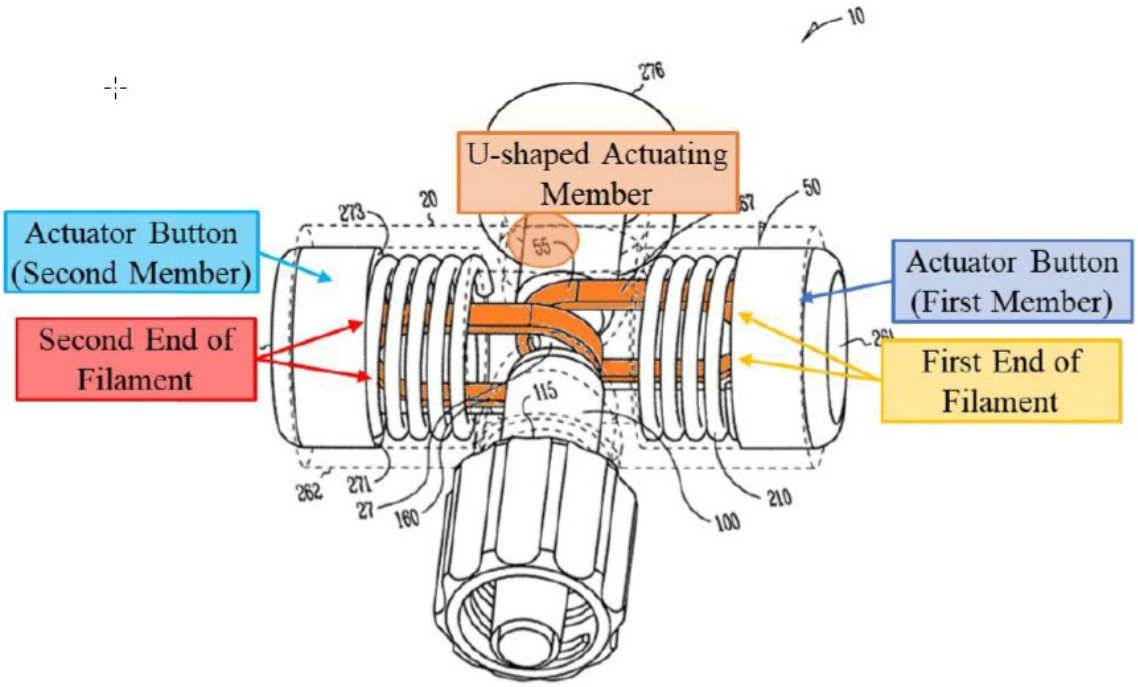

Fig. 31

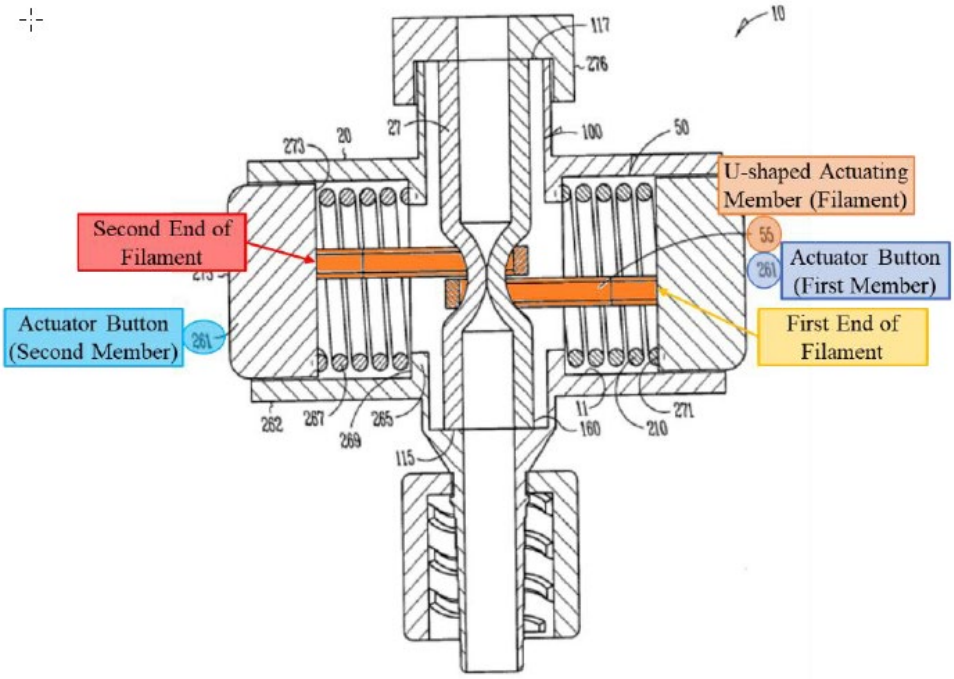

Fig. 32

Pet. 30–32 (citing, e.g., Ex. 1005, Figs. 31–32, ¶¶ 76–77). Figure 31 above is a perspective view of a valve described in Schaffer in a closed/sealed configuration, and Figure 32 is a cross-sectional view of that same valve. Ex. 1005 ¶ 41. Petitioner highlights in orange the two U-shaped actuating members 55, which are alleged to meet the claimed "filament" having a first end (yellow) coupled to a first actuator member/button (dark blue), and a second end (red) coupled to a second actuator member/button (light blue). Ex. 1003 ¶¶ 71–74. According to Petitioner, Schaffer's U-shaped actuating members can be formed of aluminum or plastic and "resemble" a ribbon, flat wire, sheet, or tape (i.e., structures listed in the '011 patent), which extend at least partially circumferentially around the tubular member (i.e., outer wall 27 of seal module 100). Pet. 27 (Ex. 1005 ¶¶ 76, 81; Ex. 1003 ¶¶ 71, 73).

2. Patent Owner's Counterargument

Patent Owner counters that Schaffer fails to disclose a "filament" as claimed and, therefore, Schaffer cannot anticipate claim 1 (or its dependent claims). PO Resp. 35, 39–45. Patent Owner argues Petitioner's challenge falls on its own terms—where Schaffer's actuating members are alleged to "resemble" a ribbon, flat wire, or tape, because "'[r]esembling' a claimed structure is insufficient to anticipate the claim limitation." PO Resp. 39–40 (citing Pet. 27). Further, Patent Owner argues, a POSA would have understood that Schaffer's actuating members are not flexible and, thus, not a "filament," properly construed. *Id.* at 41–44 (arguing "Schaffer's actuating members are expressly designed to be rigid and not to conform to the shape of the seal module as the actuating members apply compression" (citing, e.g., Ex. 1005 ¶ 77; Ex. 2008 ¶¶ 94–95, 97, 132–136, 159–169)); *see also id.* at 11–19 (analyzing Schaffer's disclosures). According to Patent Owner,

"Petitioner provides no basis for its assertion that Schaffer's U-shaped actuating members are 'thin and flexible.'" *Id.* at 45; PO Sur-reply 12.

3. Analysis

Petitioner does not persuasively establish that Schaffer discloses a "filament" as claimed. We construe the required filament as "a flexible length of material (e.g., one or more string(s), wire(s), tape(s))." *See supra* Section III.C. As explained below, Petitioner has not shown that Schaffer's valve includes such a feature with its cited U-shaped actuating members.

Petitioner implicitly admits that Schaffer's actuating members would more likely be understood by a POSA as rigid insofar as Petitioner argues that those members form gaps for fluid leakage around tools inserted through the central lumen when in use compared to the use of a flexible string or wire (like described in Hartley or Eller). *See, e.g.*, Pet. 36 (arguing, in support of alleged obviousness, that "Schaffer's U-shaped actuating members may form small gaps between the valve's lumen and the outer surface of the [inserted] device" while "Hartley's flexible string would not suffer from this potential issue because the string encircles the central lumen and precisely conforms to the diameter of the inserted devices" (citing Ex. 1003 ¶ 81)). Indeed, Mr. Thornton's opinion initially given in support of Petitioner, that, "if a tool did not ***fit the size*** of Schaffer's U-shaped members, small gaps could form," is more consistent with a determination that those members are inflexible and, thus, unable to dynamically change their size or shape to conform to the dimensions of an inserted tool when actuated. Ex. 1003 ¶ 81 (emphasis added).

We also credit Dr. Zalesky's interpretation of Schaffer over that urged by Mr. Thornton on whether the POSA would have understood Schaffer as describing *rigid* actuating members. Dr. Zalesky testifies, for example, that

a POSA would have understood from Schaffer's disclosures about the actuating members being "machined" from metal or plastic, that such actuating members would be rigid. Ex. 2008 ¶ 97 (explaining "machining is a manufacturing process in which the desired part . . . is created using the controlled removal of bulk material"); Ex. 1005 ¶ 82 ("The actuating member 55 and the actuating button 261 is machined from aluminum" and "[i]n another example, the actuating member 55 and the actuating button 261 are machined from plastic"); Ex. 2008 ¶¶ 98–99 (testifying that a disclosed valve assembly technique in Schaffer (Ex. 1005 ¶ 83) also indicates that "rigid" actuating members are used). In contrast, Mr. Thornton opines (without citation to a persuasive supporting disclosure) that a POSA "would have understood that Schaffer's U-shaped actuating members would have preferably been formed from a thin, flexible material." Ex. 1003 ¶ 71. But, at deposition, Mr. Thornton conceded that machined plastics and aluminum, like expressly described in Schaffer, are rigid. Ex. 2005, 168:2–6 ("Q. And you said that plastic that would be machined would be rigid, correct? A. I think that's a fair statement."); Ex. 2007, 152:8–10. Although Mr. Thornton opines that Schaffer's actuating members would "preferably" have been flexible, he cites no disclosure or example in Schaffer—preferred or unpreferred—where that is plainly shown.

In its Reply, Petitioner argues that Schaffer's manufacturing and assembly techniques are just examples and that other methods were available and would have allowed the POSA to make flexible metallic or polymeric materials. Pet. Reply 24–25 (citing Ex. 1014 ¶ 24). The challenge here is based on alleged anticipation. That a POSA might have employed other known techniques (not described in Schaffer) to make flexible lengths of metallic or polymeric material for hypothetical use as

actuating members in Schaffer's valves invokes, at best, obviousness-based reasoning. *Net MoneyIN*, 545 F.3d at 1371 ("[D]ifferences between the prior art reference and a claimed invention, however slight, invoke the question of obviousness, not anticipation.").

Petitioner also argues that the U-shaped actuating members in Schaffer's Figures 31 and 32 "would be flexible" because those actuating members "hav[e] a thickness substantially less than their length." Pet. Reply 19–21 (citing Ex. 1005, Figs. 31, 32; Ex. 1014 ¶¶ 17–27). Petitioner's argument is unavailing. A steel beam or a plastic broom handle are longer than they are wide and yet conventionally rigid. And, specific to the subject matter here, as Mr. Thornton admits, machining the valve's actuating members from plastic or metal, which Schaffer actually describes, would produce rigid members. Ex. 2005, 168:2–6; Ex. 2007, 152:8–10. Moreover, considering the cited drawings of Schaffer—Figure 32, in particular—does not show the actuating members changing shape or dynamically conforming to the outer surface of the seal module that those members are compressing, which, had that been shown, might indicate flexibility. Maybe the absence of any dynamic conformance of the surface of the actuating members is an unintended limitation or artifact of the drawing. Or maybe not, and what is shown is a rigid structure consistent with Schaffer's other disclosures as already explained. But we decline to find anticipation where Schaffer does not, with sufficient clarity and detail, describe a valve with a "filament" as claimed in the '011 patent.[17]

---

[17] *Wasica Fin. GmbH v. Cont'l Auto. Sys., Inc.*, 853 F.3d 1272, 1284 (Fed. Cir. 2017) ("Anticipation requires that a single reference describe the claimed invention with *sufficient precision and detail* to establish that the

Ultimately, on whether Schaffer describes rigid or flexible U-shaped actuating members, Dr. Zalesky's interpretation of the reference is more plausible and we find greater evidentiary support for Patent Owner's position on this issue. Notwithstanding Mr. Thornton's testimony that a POSA reading Schaffer would understand that flexible actuating members are described (*see* Ex. 1014 ¶¶ 21–22), on cross-examination, Mr. Thornton admitted "[i]t's not clear" whether Schaffer's U-shaped actuating members are flexible or rigid. Ex. 2007, 115:16–23 (testifying "[t]he material properties of the U-shaped actuating members are not clearly defined in the Shafer [*sic*] application"). Dr. Zalesky, in contrast, has consistently testified that a POSA would understand that Schaffer describes inflexible actuating members. *See, e.g.*, Ex. 2008 ¶¶ 91–102 (citing, *inter alia*, Schaffer's illustrations of the valve in operation, and the disclosed exemplary manufacturing and assembly methods as indicating that "the actuating members 55 are rigid rather than flexible"). On the record before us, Petitioner does not persuade us that Schaffer's U-shaped actuating members satisfy claim 1's "filament" limitation.

For the foregoing reasons, Petitioner has not shown by a preponderance of the evidence that Schaffer describes a valve with a "filament" as recited in claim 1 (or dependent claims 2–9). Accordingly, Petitioner does not prevail on its anticipation challenge.

F. Ground 2: Obviousness over Schaffer

Petitioner argues that claims 1–9 would have been obvious over Schaffer alone. Pet. 16–32 (claim 1, preamble, tubular member, and

---

subject matter existed in the prior art.") (emphasis added and internal quotation marks omitted); *see also id.* ("[I]t has long been understood that ambiguous references do not, as a matter of law, anticipate a claim.").

constricting mechanism and "filament" limitations), 49–50 (biasing system), 51–70 (dependent claims).

Petitioner, in a footnote, cites the well-settled principle that an anticipatory disclosure also renders the anticipated claims invalid under § 103 because "anticipation is the epitome of obviousness." Pet. 19 n.3. That principle does not apply here because, as discussed above, Petitioner has not shown that Schaffer anticipates claims 1–9. *See supra* Section III.E.

Continuing, even if Schaffer's U-shaped actuating members do not meet claim 1's recitation that the "filament circumferentially constricts the lumen to create a seal," Petitioner argues that it would have been obvious to modify Schaffer's U-shaped actuating members. Pet. 32–33. According to Petitioner, a POSA would have been motivated to modify those members "to closely conform to the seal module . . . so [as] to form a better seal and avoid potential gaps [as] discussed in the following section [of the Petition (i.e., addressing alleged obviousness based on combining Schaffer and Hartley)]." *Id.* at 32. Petitioner contends that a POSA "could have selected a thin, flexible sheet or flat ribbon of aluminum or plastic to form the actuating members." *Id.* (citing Ex. 1003 ¶ 75).

Petitioner's analysis and evidence for Ground 2 is unpersuasive. As discussed above, we find on this record that Schaffer's U-shaped actuating members are rigid, not flexible. *See supra* Section III.E. The notion that a POSA would, from Schaffer alone, have simply selected flexible sheets or flat ribbons for the actuating members evokes a hindsight bias. Petitioner

cites no disclosure of such flexible sheets or ribbons representing the claimed "filament" in any reference to support its Ground 2 allegations.[18]

Moreover, inasmuch as Petitioner is suggesting that it would have been obvious to, for example, use two flat, flexible ribbons in place of Schaffer's two U-shaped actuating members to provide a better seal and "avoid potential gaps" (Pet. 32), Petitioner appears to contradict itself. In its Reply, Petitioner argues gaps would form whether Schaffer's two actuating members were rigid or flexible if each member was attached to each button at two fixed, spaced-apart points. Pet. Reply 22–23 ("Gaps will form if the members are rigid, but they will also form if the members are flexible"). If Petitioner is suggesting some other means of attachment or modification of Schaffer based on an addition of hypothetical flexible flat sheets or ribbons, we are left to guess what that might be.[19]

For the reasons above, we determine Petitioner has not established by a preponderance of the evidence on this record that claims 1–9 would have been obvious over Schaffer alone.

---

[18] Although not the basis for our decision here given the Petition's filing date (before September 1, 2025), the Office's updated policy on enforcement of Rule 104(b)(4) is plain—"general knowledge" comprising expert testimony, common sense, or other evidence that is not prior art patents or publications "may not be used to supply a missing claim limitation" in IPR proceedings. Enforcement and Non-Waiver of 37 C.F.R. § 42.104(B)(4) and Permissible Uses of General Knowledge in Inter Partes Reviews, issued July 31, 2025, *available at* www.uspto.gov/sites/default/files/documents/ aapa_memo_final__signed.pdf.

[19] To the extent Petitioner alludes to its analysis on the formation of gaps as a reason to substitute Schaffer's two U-shaped actuating for a single flexible string (of Hartley) or wire (of Eller), that is addressed below for Grounds 3 and 4, where Petitioner provides more developed argument and evidence to support of those grounds compared to Ground 2. Pet. 32.

G. Grounds 3 & 4: Obviousness over Schaffer and Hartley, or Schaffer and Eller

Petitioner argues that claims 1–9 would have been obvious over the combinations of Schaffer with Hartley (Ground 3) and Schaffer with Eller (Ground 4). Pet. 33–40 (modification of Schaffer in view of Hartley), 40–49 (modification of Schaffer in view of Eller), 51–70 (dependent claims).

Because of the overlap in Petitioner's arguments for Grounds 3 and 4, as well as the overlap in Patent Owner's rebuttal arguments for those grounds, our discussion below addresses both grounds together, and we focus on claim 1 as illustrative. In general, the parties' remaining dispute for Grounds 3 and 4 centers on whether a POSA would have had sufficient reasons for combining the teachings of Schaffer with Hartley or Eller in the manner proposed. *See* PO Resp. 45–68 (arguing, *inter alia*, no motivation to modify Schaffer because no problem is solved and arguing that the modification is not a simple substitution).

1. Petitioner's Contentions

Grounds 3 and 4 propose substituting the U-shaped actuating members used with valves disclosed in Schaffer with another structural sealing feature used in the hemostasis valves of Hartley or Eller. More specifically, Petitioner proposes replacing the two actuating members with a flexible string (as described in Hartley) or a flexible wire member (as described in Eller) and, thereby, arriving at a valve with all of claim 1's limitations, including the recited "filament." *See generally* Pet. 33–49.[20]

[20] Grounds 3 and 4 rely on Schaffer's undisputed disclosures, discussed above under Ground 1, as meeting claim 1's preamble, tubular member, actuator members, and biasing system limitations. Pet. 19–26, 49–50.

For Ground 3, Petitioner contends that a skilled artisan "would have found it obvious to substitute Hartley's string for Schaffer's U-shaped actuating members," arguing, *inter alia*, that such modification "merely entail[s] substitution of one known element (Hartley's string) for another (Schaffer's U-shaped actuating members) to yield the predictable results of constricting the central lumen of Schaffer's valve to form a seal." *Id.* at 34–36 (arguing a POSA would have recognized Hartley's "flexible string . . . encircles the central lumen and precisely conforms to the diameter" of "inserted devices (e.g., other catheters or tools)" and, thus, may seal more effectively across a wider range of diameters for such inserted devices compared to Schaffer's U-shaped members and avoid formation of small gaps between the valve's lumen and the outer surface of the inserted devices); Ex. 1003 ¶¶ 80–81; Ex. 1006 ¶¶ 31, 37, Figs. 1–4.

Furthermore, Petitioner contends, POSAs had "a finite number of materials to select from to constrict a lumen of a tubular member in a hemostasis valve in 2017." Pet. 36 (citing Ex. 1003 ¶ 83). According to Petitioner, Hartley and Schaffer disclose two such options: Hartley's string and Schaffer's aluminum or plastic U-shaped actuating members. *Id.* And, Petitioner contends, "Eller discloses a third option: one or more wire members." *Id.* Petitioner contends that a POSA "would have found it obvious to select from these finite, predictable options" and done so with a reasonable expectation of success. *Id.*; *see also id.* at 37–40 (explaining the design and operation of the modified valve and arguing that a POSA would have reasonably expected success in such modification to arrive at the claimed subject matter); Ex. 1003 ¶¶ 84–88.

The image below illustrates Petitioner's proposed combination of Schaffer and Hartley.

Demonstrative Illustration
Schaffer + Hartley's String

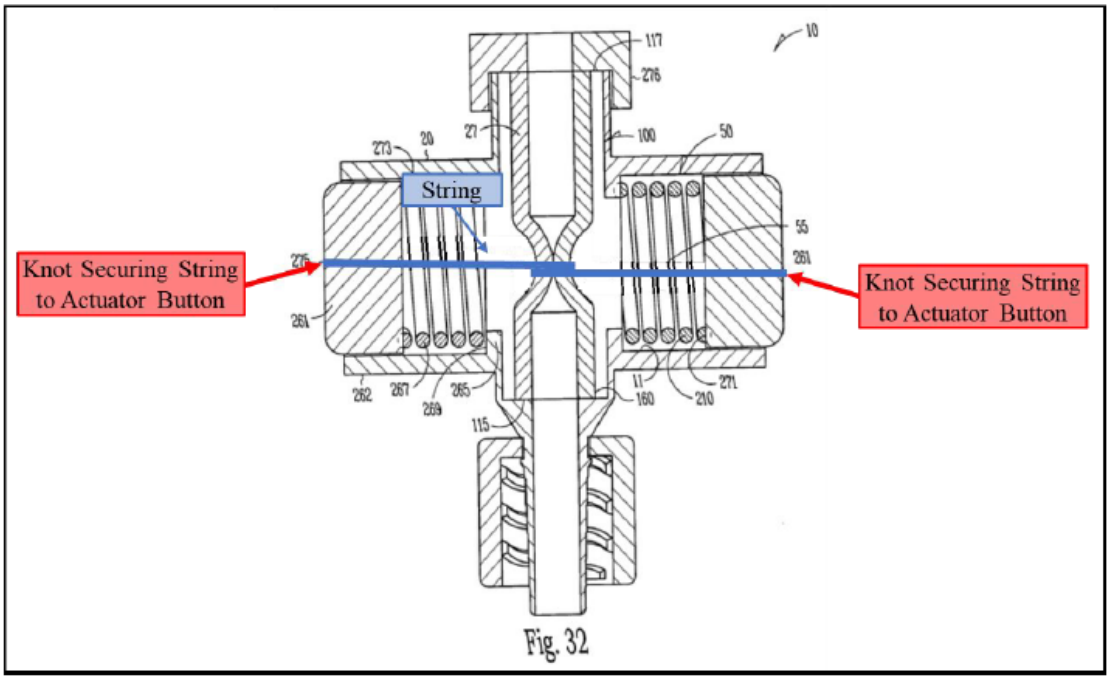

Pet. 37–38. The above image is a demonstrative that shows Schaffer's valve (from Schaffer's Figure 32) modified to substitute the two U-shaped actuating members for Hartley's single continuous string (blue highlight), which string loops around an outer wall 27 of seal module 100 and is secured at the string's ends (e.g., by knots) to the respective actuator buttons (red highlights). *Id.* (citing Ex. 1003 ¶¶ 84–88). Petitioner contends the skilled artisan would have reasonably expected success in this modification because, for example, Hartley's string would function in a similar way to Schaffer's U-shaped actuating member—constricting and collapsing the central lumen due to a biasing force applied by the opposing springs and actuator buttons. *Id.* at 38–40 (citing, e.g., Ex. 1005 ¶ 77; Ex. 1006 ¶ 31; Ex. 1003 ¶ 85).

As noted, Petitioner contends that a skilled artisan would have recognized that, depending on the diameter and shape of the tool inserted

into the valve's central lumen during surgical procedures, Hartley's string may provide a more effective seal than Schaffer's U-shaped actuating members. Pet. 35–36 (citing Ex. 1003 ¶ 81). The graphic below helps illustrate Petitioner's reasoning.

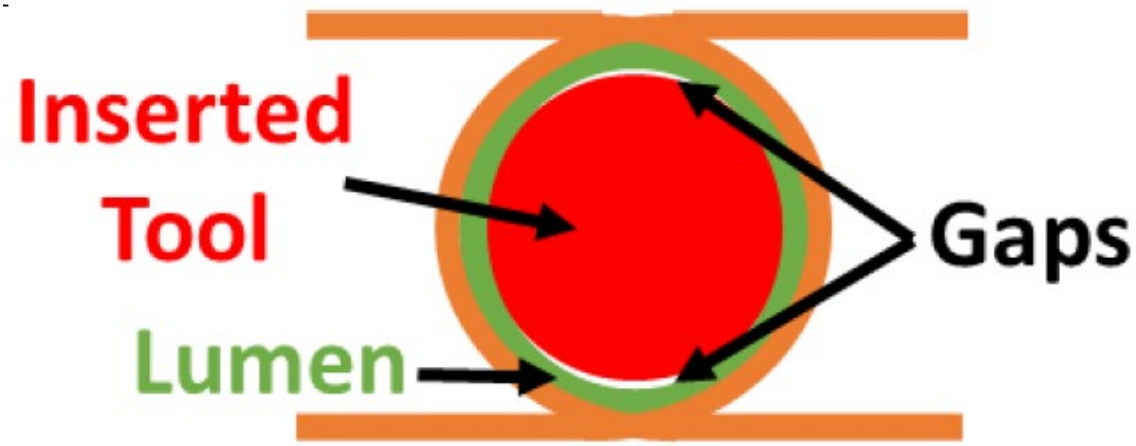

Id. The above graphic shows a longitudinal view of a tubular member defining a lumen (green) with a tool/device (red) with a circular diameter inserted through that lumen. *Id.* The graphic shows two opposing and overlapping U-shaped features (orange) that represent Schaffer's U-shaped actuating members as they are being pulled against the outer walls of the tubular member (e.g., seal module) to form a fluid seal in the lumen. *Id.* But, as Petitioner argues and the graphic shows, "small gaps" (white space labeled "Gaps") may form "between the valve's lumen and the outer surface of the [inserted] device" in this arrangement, possibly allowing fluid/blood to leak through such gaps. *Id.* According to Petitioner and Mr. Thornton, "Hartley's flexible string would not suffer from this potential issue because the string encircles the central lumen and precisely conforms to the diameter of the inserted devices" when its ends are pulled in opposite directions and the string placed under tension. *Id.* (citing Ex. 1006 ¶ 37 (teaching Hartley's string "will close over a range of diameters of devices passed through the

valve or can close completely down to be self[-]sealing")); Ex. 1003 ¶¶ 80–81 (testifying a POSA "would have known that multiple tools of varying sizes could be required for a medical procedure, so Hartley's ability to seal around a range of diameters would have been beneficial" and "Hartley's flexible string may better conform to varying diameters than Schaffer's U-shaped members").

Petitioner's proposed combination of Schaffer and Eller (Ground 4) is similar, but uses Eller's flexible "wire member" as the alleged "filament" in essentially the same way as Hartley's string is used and depicted above in the modified Schaffer valve. Pet. 40–49. The stated reasons for making the wire member substitution and reasonable expectation of success echo the Schaffer-Hartley combination discussed above. *Id.* at 44–49 (citing, e.g., Ex. 1007, 8:27–39, 14:37–49, 15:21–40, 17:47–18:3; Ex. 1003 ¶¶ 93–100). Further, Petitioner points out, Eller teaches that any suitable wire-attachment technique (e.g., welding, friction fit, adhesives) can be used, and that Eller's disclosures can be applied with any suitable actuator including rotatable actuators or linear actuators like Schaffer. *Id.*; *see, e.g.*, Ex. 1007: 8:27–39.

2. Patent Owner's Counterargument

Patent Owner argues that Petitioner's reasoning for modifying Schaffer's valve based on the alleged formation of small gaps (potential leak paths for fluid) is contradicted by Schaffer and positions taken by Petitioner. PO Resp. 46–52. According to Patent Owner, Schaffer teaches that its valve forms a complete fluid seal with or without instruments in place, and Petitioner and Mr. Thornton have acknowledged the same when addressing some of the challenged dependent claims. *Id.* (citing, e.g., Ex. 2008 ¶¶ 154–158 (Dr. Zalesky's analysis of Schaffer and Petitioner's contentions)). Patent Owner points to Schaffer's disclosure related to a "a durable stasis

valve that blocks the flow of gas or fluid completely and immediately with or without an instrument in place within the gas/fluid path," which Petitioner cited in support of its anticipation challenge to dependent claim 5. Ex. 1005 ¶ 8; PO Resp. 47–49 (citing Pet. 56–58; Ex. 1003 ¶ 120). If Schaffer's valve provided a complete seal, Patent Owner reasons, there would have been no need to make any changes based on Hartley's string or Eller's wire. PO Resp. 46–49. In support, Patent Owner cites Mr. Thornton's admission that "[i]f it [(Schaffer's valve)] worked perfectly for all the ranges of tools, then there probably wouldn't be a need to make adjustments and move to a string-type member." *Id.* (quoting Ex. 2007, 116:18–117:2).

Patent Owner argues that, in fact, Schaffer's valve "does form a complete seal with or without instruments inserted." PO Resp. 49–52. According to Patent Owner, Schaffer, through the use of rigid U-shaped members and inclusion of a third seal member (165) having extremely compliant seal-member material that can be compared to a sticky or gelatinous substance, produces a complete fluid seal. *Id.* (citing, e.g., Ex. 1005 ¶¶ 58 (disclosing valve creates "nearly fluid/gas tight seal under very light compression" using material that "can be compared to a gelatinous substance"), 68 (disclosing "seal member 165 is so compliant that it forms a seal around [multiple] instruments 260 even if the instruments are irregularly shaped"), Figs. 16–19). In contrast, Patent Owner argues, Petitioner's proposed combination "would actually seal less effectively around multiple instruments" if, for example, "two circular instruments were inserted side-by-side through Schaffer's seal module." *Id.* at 51–52 (depicting a hypothetical two-instrument scenario and illustrating "Gaps" even if Hartley's string or Eller's wire were used); Ex. 2008 ¶ 136; PO Sur-reply 13–19 (arguing the "alleged problem" Petitioner's combinations purport to

solve is created by Petitioner by omitting Schaffer's highly compliant third seal member material).

Patent Owner also argues that there would have been no motivation to modify Schaffer as proposed because doing so would change Schaffer's principle of operation. PO Resp. 52–62. According to Patent Owner, Schaffer uses "rigid" U-shaped actuating members and replacing those members with a string or wire would "prevent forcible disengagement" from the seal module as described in Schaffer. *Id.* at 54–55 (arguing Hartley's string "would never disengage" Schaffer's seal module); Ex. 1005 ¶ 77 (disclosing that depressing the two buttons in Schaffer's valve, such as shown in Figs. 30–34, "allows each engaged actuating member 55 to forcibly disengage outer walls 27 of the seal module 100 allowing the portion 108 of the containment structure 160 to retract to an uncollapsed configuration where gases and fluids can pass therethrough"). Furthermore, Patent Owner argues, Petitioner's proposed change would make manufacturing the valve more difficult and undermine the valve's durability. PO Resp. 55–60 (citing Ex. 2008 ¶¶ 159–169). Patent Owner cites Schaffer's exemplary manufacturing (e.g., machining) and assembly techniques that produce, or benefit from use of, rigid actuating members. *Id.* (citing Ex. 1005 ¶¶ 82–83). And, Patent Owner argues, "Schaffer's construction enables the valve to endure operational demands and maintain its performance and structural integrity over time." *Id.* at 60 (arguing "Hartley's string or Eller's wire member could weaken the valve's durability given the flexible nature of these components") (citing Ex. 2008 ¶ 169).

Patent Owner further argues that, even if a POSA would have understood that Schaffer's valve could form gaps for fluid leakage, simpler alternatives existed that would have improved Schaffer's seal and solved the

problem. PO Resp. 60–62. Patent Owner contends that "simple modifications" would address any sealing issue, including adjusting the spring strength to apply additional force or adjusting the resilience or compressibility of the seal module. *Id.* at 60–62 (citing Ex. 2008 ¶¶ 173–175; Ex. 1003 ¶ 122); PO Sur-reply 22–24 (arguing such changes are "more plausible" and would not have departed from Schaffer's principles of operation including forcible disengagement, ease of manufacturing, and durability). Thus, Patent Owner argues, a POSA would have understood that "simple properties of Schaffer's existing valve" could have been modified without resort to wholesale substitution of Schaffer's actuating members for a string or wire. PO Resp. 60–62.

Lastly, Patent Owner argues that Petitioner's proposed modification of Schaffer to include a flexible string or wire is "not a simple substitution" of one known element for another. PO Resp. 63–68; PO Sur-reply 20–26. Patent Owner argues that, in Schaffer, each U-shaped actuator is attached to a single actuator button. PO Resp. 63–64. In Hartley and Eller, however, Patent Owner contends the string and wire are not attached to two independently controllable actuators. *Id.* at 64–66 (explaining that Hartley's string is wound around a diaphragm/lumen and its ends are attached to a single rotary actuator that places tension on the string; explaining that Eller's wire is disposed around a collapsible sleeve and has one end attached to a stationary point (e.g., a valve housing) and the other end attached to a movable (e.g., rotatable) actuator). According to Patent Owner, "Petitioner's arrangement including a string/wire member having both ends attached to two separate actuators" is not known in the art and, thus, the modification proposed by Petitioner is not simple. *Id.* at 67–68 (arguing "controlling a string or wire with two independently movable actuators . . .

would increase the complexity and variability of Schaffer's valve");
Ex. 2008 ¶¶ 127–128.

3. Analysis

a) Teaching or Suggestion of All Limitations

Petitioner provides evidence-backed and essentially uncontested argument to explain where each of claim 1's limitations is taught or suggested in the combination of Schaffer and Hartley. *See supra* Section III.E. (discussing Schaffer's undisputed disclosure of claim 1's preamble, tubular member, and biasing system). Pet. 19–21, 49–50; Ex. 1003 ¶¶ 58–63, 101–103; *see also* Pet. 21–26 (addressing Schaffer's actuator and actuator buttons as meeting claim 1's "actuator" and "first member" and "second member" limitations), 33–35 (addressing Hartley's flexible string as the claimed "filament"); Ex. 1006 ¶¶ 5, 17 ("flexible member may be a string, suture or band or other suitable material"), 31, Figs. 1–4; Ex. 1003 ¶¶ 76–88; Pet. Reply 1 ("PO ***does not*** dispute that Hartley and Eller disclose 'filaments,' even under PO's restrictive construction").

Petitioner likewise provides evidentiary support showing where each of claim 1's limitations is taught or suggested in the proposed combination of Schaffer and Eller. Pet. 40–44 (citing Eller's flexible wire member as the "filament"); Ex. 1007, 15:41–60 (wire members "can be formed of any suitable material . . . and skilled artisans will be able to select a suitable material" appropriate to the embodiment, including "metals such as steel, stainless steel, titanium" and "polymers" such as "polypropylene" and "Nylon"), 15:61–16:6 (a "wire member . . . can have any suitable structure and comprise any suitable number of strands and/or fibers that are twisted, or otherwise interconnected to one another"); Ex. 1003 ¶¶ 89–92 (citing,

inter alia, Eller's teachings that, when the wire member is pulled and placed in a tensioned state, the sleeve moves from a relaxed to a constricted state).

Petitioner persuades us that the subject matter of claim 1 is taught or suggested in the combined disclosures of Schaffer and Hartley, as well as in Schaffer and Eller, based on the argument and evidence set forth in the Petition, as summarized above. Patent Owner never explicitly argues that any limitation in claim 1 is missing in the combined disclosures of Schaffer and Hartley or Schaffer and Eller. And, even if Patent Owner's argument against the reasons for combining Schaffer with Hartley or Eller is that the combinations are not "simple" because no asserted prior art shows a single string or wire attached to two separate actuators was construed as an argument that a limitation is missing, such argument would be unavailing. PO Resp. 63–68. When obviousness is the issue, the question is whether each limitation is taught or suggested in the prior art *as combined*. *See Fleming v. Cirrus Design Corp.*, 28 F.4th 1214, 1222 (Fed. Cir. 2022); *Bradium Techs. LLC v. Iancu*, 923 F.3d 1032, 1050 (Fed. Cir. 2019) (finding patentee's arguments on an alleged absence of a limitation "lack merit because they attack the disclosures of the two references individually").

We have also considered Petitioner's argument and evidence in support of the challenge to dependent claims 2–9 under Grounds 3 and 4. Pet. 51–69; Ex. 1003 ¶¶ 105–142. That argument and evidence is persuasive in establishing by a preponderance of the evidence that the subject matter of claims 2–9 is taught or suggested in the combined teachings of Schaffer and Hartley, or Schaffer and Eller. The only dependent claim for which Patent Owner provides any counterargument is claim 3, which we address below.

Claim 3 depends from claim 1 and recites: "wherein the first portion of the filament extends in a loop completely around the tubular member."

Ex. 1001, 22:42–44. Patent Owner argues that claim 3 is not "rendered obvious by the combination of Schaffer, Hartley, and Eller." PO Resp. 73–74. But Patent Owner's only argument is that "Schaffer fails to disclose this feature" because the "side-by-side" configuration of Schaffer's U-shaped actuating members "do not form a loop." *Id.* This argument fails to deal with Petitioner's evidence showing that claim 3's limitation would have been obvious over, for example, Hartley's teachings. Pet. 53; Ex. 1006 ¶ 31 (teaching that the flexible string is "wound preferably twice" around cylindrical diaphragm and has its ends mounted to opposing portions of a rotary actuator with knots), Fig. 3 (showing Hartley's string wound at least once completely around the central diaphragm); Pet. 54 (citing Ex. 1007, 22:18–24 (disclosing that the wire member can be disposed "around more than 100% of the outer surface of the sleeve" and "at least one full revolution around the outer surface of the sleeve")); Ex. 1003 ¶¶ 113–114 (explaining why Eller's wire would form a loop as claimed).

b) Reasons for Combining the Art & Reasonable Expectation of Success

We agree with Petitioner that a POSA would have had reasons for combining the teachings of Schaffer and Hartley (or Eller) in the manner proposed, and with a reasonable expectation of success in producing valves as recited in claims 1–9.

We find, on balance, that a POSA would have considered the modification of Schaffer's valve to include Hartley's string or Eller's wire to involve little more than combining known prior art features according to those features' known functions to yield a predictable result. Hartley's string and Eller's wire were known in the art and used for a similar purpose to Schaffer's U-shaped actuating members—to constrict and collapse a

tubular member/lumen and provide a fluid seal in hemostasis valves. *See, e.g.*, Ex. 1005 ¶ 77 (disclosing U-shaped actuators are "at least partially circumferencially [*sic*] disposed about the portion 108 of the seal module 100 depressing and at least partially collapsing" that portion of the seal module); Ex. 1006 ¶¶ 5 ("flexible member [is] passed circumferentially around the cylindrical diaphragm and extending radially and/or tangentially therefrom and an extension arrangement to pull the flexible member . . . to constrict the diaphragm to at least partially close off the longitudinal aperture"), 17 ("The flexible member may be a string, suture or band or other suitable material"), 37 (describing a "constriction valve arrangement which will close over a range of diameters of devices passed through the valve or can close down completely to be self[-]sealing"), Figs. 3–4 (showing flexible member constricting central diaphragm/lumen); Ex. 1003 ¶¶ 80–82 (testifying use of Hartley's string for its known purpose would have yielded the predictable result of constricting the central lumen of Schaffer's valve to form a seal), 93–95 (similar testimony on Eller's wire).

That Hartley and Eller contemplate use of their respective string and wire for constricting a lumen and providing a seal against leakage of bodily fluids during surgical procedures also suggests that the disclosed strings and wires would have been regarded as suitable and sufficiently durable for medical devices—and hemostasis valves, in particular. *See, e.g.*, Ex. 1007, 1:13–16, 15:41–56 (listing suitable biocompatible materials for the wire member, such as polypropylene, stainless steel, and titanium).

We further agree with Petitioner that a POSA would have considered the proposed modification to be relatively straightforward, and within the ordinary capabilities of the skilled artisan. For example, as proposed by Petitioner, the ends of Hartley's string or Eller's wire could have been (and

predictably would have been) attached to Schaffer's opposing actuator buttons according to known techniques, such as knotting or welding. Ex. 1003 ¶ 84 (proposing a "simple" knotting attachment); Ex. 1006 ¶ 31 ("string 14 is mounted into the rotary actuator with a knot 16"), Fig. 3 (showing string 14 connected to actuator at both ends with knots); *see also* Ex. 1007, 14:37–54 (disclosing "skilled artisans will be able to select any suitable method or technique" for attaching a flexible wire to an actuator of a fluid stasis valve; describing use of "adhesives, welding, fusing, [and] providing a friction fit" for attaching a wire to an actuator). That a POSA would have likely recognized that Hartley's string or Eller's wire could be used more broadly including with valves of the type described in Schaffer—and not limited to rotary valves—is supported by at least Eller's teachings. Ex. 1007, 8:27–44 (disclosing "[s]killed artisans will be able to select any suitable actuator to include on a selective fluid barrier device" and identifying "rotatable actuators, ***linear actuators***, slidable actuators, [and] pivotable actuators" among others) (emphasis added). As Mr. Thornton explains, a POSA "would have understood that Schaffer's actuator is an example of a linear actuator" and Eller's disclosure regarding the range of actuators suitable for use with its wire member "would have reinforced" the reasonable expectation that such wire member could be successfully combined with Schaffer's linear actuator buttons. Ex. 1003 ¶ 98.

Petitioner also persuades us that the proposed modification of Schaffer's valve to include a single flexible string or wire that replaces the two U-shaped actuating members would have been seen by the POSA as potentially advantageous—giving further reason for the POSA to have made that change. Pet. 35–36. We credit Mr. Thornton's testimony that a POSA would have understood that Schaffer's U-shaped actuating members may

form small gaps for fluid leakage around the exterior of certain tools inserted into the lumen. Ex. 1003 ¶ 81. On the other hand, a POSA would have recognized that a single flexible string or wire that is looped completely around the exterior of the seal module/lumen would provide more uniform constriction and compression around the outer diameter of some commonly-used tools and including tools with diverse shapes and sizes. Ex. 1003 ¶¶ 80–88, 93–100. We observed this same reason for modifying the art at institution and, after considering the full trial record, our view has not changed. Inst. Dec. 37 (preliminarily finding that a POSA would have considered Hartley's string or Eller's wire "as providing expected benefits insofar as such a filament may more precisely and uniformly constrict a lumen against inserted tools of different sizes and shapes").

Patent Owner's expert, Dr. Zalesky, does not disagree that a flexible string or wire would have carried this advantage. Ex. 2008 ¶ 75 (testifying a "filament changes shape dynamically, allowing for better adaptability to the contours of the valve lumen as it is constricted");[21] Ex. 1015 (Zalesky Tr.), 86:19–87:4 (testifying that POSAs in 2017 would have recognized that the "cinching" effect provided by a filament would have been more effective for large-bore catheters based on "simple mechanical engineering and physics"). And, at the oral hearing, Patent Owner agreed that using Hartley's string in Schaffer would help eliminate potential fluid gaps; but Patent Owner qualified its answer that such a benefit would allegedly only have arisen if "the highly-compliant" seal member material in Schaffer was removed,

[21] Dr. Zalesky similarly testified, pre-institution, that a "filament, which is flexible, can change shape dynamically, allowing for better adaptability to the surface contours of the object as it is constricted." Ex. 2001 ¶¶ 62–63.

which material Patent Owner argues is required in Schaffer and, thus, would not be omitted. Tr. 51:20–25 ("JUDGE JESCHKE: Counsel, wouldn't the use of Hartley's string in Schaffer lead to more uniform compression around the tube of Schaffer and thereby eliminate some of the gaps[?] . . . [Patent Owner's counsel]: If the non-compliant – or the highly-compliant seal member is removed or not included."). We address Patent Owner's argument about the highly-compliant seal member further below.

Petitioner also argued what amounts to an obvious-to-try rationale for modifying Schaffer's valve as proposed to include Hartley's string or Eller's wire. Pet. 36, 45 (arguing a POSA had "a finite number of materials to select from to constrict a lumen in a hemostasis valve in 2017" and identifying materials, including Schaffer's U-shaped members, Hartley's string, and Eller's wire) (citing Ex. 1003 ¶¶ 83, 96). Patent Owner, in its Patent Owner Response, did not specifically address this rationale. *See generally* PO Resp.; Pet. Reply 3 ("PO also does not dispute that there were a finite number of predictable materials to select from to constrict the lumen of a tubular member in a hemostasis valve in 2017.").

In its Sur-reply, Patent Owner argued for the first time that Petitioner's "obvious-to-try" rationale should be rejected because the options for constricting a valve lumen have not been established as "finite, identified, and known." PO Sur-reply 26–28. Patent Owner does not explain why it was late in raising this counterargument. But, even on the merits, Patent Owner's argument is flawed. Through trial in this matter, we find essentially four known options for constricting a hemostasis valve lumen: the U-shaped members of Schaffer; the string or wire of Hartley and Eller; a pressure-assisted collapse valve; and pinch or clamp-type valves like described in references like Wong and Kees (and some other Schaffer

embodiments).[22] *Id.* at 27–28; Tr. 19:14–19 (Petitioner arguing "the evidence here shows that there's four ways at maximum: pinching, Schaffer, Hartley, and Eller" and "it's a finite number"), 41:5–24 (Patent Owner arguing "there are many ways" in Schaffer and "[e]ssentially, all of these are pinching. . . . They squeeze the valve."). Mr. Thornton's admission at deposition in a related matter that he did not know how many other ways might exist for compressing a tube does somewhat weaken Petitioner's rationale. PO Sur-reply 27–28 (citing Ex. 1010, 107:2–13). Nonetheless, Patent Owner's suggestion that there are innumerable, unknown ways to constrict a lumen of a hemostasis valve appears, on this record, to be exaggerated. In any case, even if we rejected Petitioner's obvious-to-try rationale, we are persuaded that the other reasons given by Petitioner support the proposed modification of Schaffer to include Hartley's string or Eller's wire.

In sum, we find that the reasons given by Petitioner, collectively and individually, support Petitioner's rationale for modifying Schaffer to include Hartley's flexible string or Eller's flexible wire, and that such modification would have been made with a reasonable expectation of success in arriving at the subject matter of the challenged claims. We address Patent Owner's counterarguments in more detail below, explaining why those arguments are insufficient to undermine Petitioner's challenge.

---

[22] As cited by Patent Owner, Mr. Thornton discussed the other techniques, like the pressure-assisted approach and the pinch/clamp valves described in Wong and Kees during cross-examination in a related proceeding. *See* PO Sur-reply 27 (citing, e.g., Ex. 2010, 105:24–106:19, 108:14–20, 110:7–19, 112:5–114:24).

Patent Owner argues that Schaffer's *unmodified* valve produces a complete seal and, thus, there is allegedly no reason to change it. PO Resp. 46–52. We disagree. The cited portion of Schaffer related to an alleged "complete" seal appears in Schaffer's "Background," from which Schaffer cites a *need* for a hemostasis valve that completely blocks fluid flow. Ex. 1005 ¶ 8 ("Accordingly, what is needed is a durable stasis valve that blocks the flow of gas or fluid completely and immediately with or without an instrument in place within the gas/fluid path."). Regardless, assuming Schaffer is interpreted as describing valves aimed at addressing such need—and that at least some embodiments do so—that does not mean that a POSA would forego efforts to improve on Schaffer's teachings. *Pro-Mold & Tool Co., Inc. v. Great Lakes Plastics, Inc.*, 75 F.3d 1568, 1573 (Fed. Cir. 1996) ("We start from the self-evident proposition that mankind, in particular, inventors, strive to improve that which already exists."). Indeed, even in Schaffer's preferred embodiments that use a highly-compliant, "sticky" or "gelatinous" material that "exhibits a 'self[-]closing' nature" for the third seal member, Schaffer teaches that such embodiments are capable of "forming a *nearly* fluid/gas tight seal." Ex. 1005 ¶ 59 (emphasis added). Schaffer does not, thus, teach that its valves provide a perfect seal in all embodiments and under all circumstances. And Mr. Thornton's testimony that, if Schaffer's valve was hypothetically perfect, there would be no reason to modify it, does not materially undercut Petitioner's challenge. PO Sur-reply 18–19 (citing Ex. 2007, 116:18–117:2).

As discussed above, Petitioner and Mr. Thornton present scenarios (that we find persuasive) where Schaffer's valves may not seal completely or perfectly, suggesting such valves would have been ready for improvement. *See, e.g.*, Pet. 36; Ex. 1003 ¶ 81 (addressing formation of potential gaps with

Schaffer's U-shaped actuating members around certain tools). The improvement, as explained above, is the substitution of a flexible string or wire that would completely surround the tubular member and provide more precise and uniform constriction.

Patent Owner suggests that any improvement would only arise if one assumes Schaffer's highly-compliant third central seal member material was not used in Schaffer's valves. PO Resp. 49–51; PO Sur-reply 13–15 (arguing Schaffer's valve already "seals completely via the highly compliant seal member 165" (citing Ex. 2008 ¶¶ 134–135)). And Patent Owner argues that Schaffer requires the highly-compliant third central seal member material and omitting it is unreasonable. PO Sur-reply 13–15 (citing testimony that Patent Owner argues confirms third seal member 165 is included in every illustrated embodiment in Schaffer, including Figures 30–34 (e.g., Ex. 2010, 69:12–70:3, 70:5–71:23, 73:13–77:3)).

We disagree with Patent Owner's argument because, when obviousness is the issue, the prior art's teachings are not limited to the art's examples and preferred embodiments. *Merck & Co., Inc. v. Biocraft Labs., Inc.*, 874 F.2d 804, 807 (Fed. Cir. 1989). The third central seal member comprising a highly-compliant material is preferred, but not required, in Schaffer. *See, e.g.*, Ex. 1005 ¶ 59 ("In one embodiment, the third central seal member 165 includes material 166 that is highly elastic, deformable, compliant and yet virtually non-compressible," and "in one option" such material "is extremely soft and compliant and intrinsically 'sticky'"); *see also id.* (describing the highly-compliant material forming the third central seal member "[f]or illustrative purposes only"). Moreover, in introducing the embodiment of Figures 30–34, Schaffer discloses that the valve's "seal module 100 is formed of *one or more seal members*" and "[i]n another

option, *the seal module 100 and/or any of its respective seal members can be formed of one or more materials*, including their relative properties, as discussed above." *Id.* ¶ 75 (emphasis added). We find that Schaffer suggests that the third central seal member with its highly compliant seal member material is optional (even if preferred). Ex. 1003 ¶ 88 (testifying that, according to Schaffer (Ex. 1005 ¶ 81), the seal module may be made of various materials, including modified vinyl, silicone, polyurethane, and combinations or modifications thereof); Ex. 1014 ¶ 32 (testifying the highly-compliant materials for the third seal member are optional and, according to Schaffer, the same portion of the valve could be made from, e.g., silicone or polyurethane that would lack such characteristics (citing Ex. 1005 ¶¶ 59, 81))[23]; Ex. 1015 (Zalesky Tr.), 163:7–13 ("Q. Is it your opinion that Schaffer's seal member must be made from a sticky or gelatinous substance? . . . A. My understanding is a gelatinous material is one embodiment but not necessary.").

---

[23] Mr. Thornton also credibly testifies that a POSA would have recognized potential downsides to using a highly-compliant sticky material for the seal member. Pet. Reply 6 (citing Ex. 1014 ¶ 33 (testifying that a sticky material would also have disadvantages insofar as it could impede the lumen from retracting to an uncollapsed configuration when the constricting force is released as intended in Schaffer (Ex. 1005 ¶¶ 54, 77)); Ex. 1005 ¶ 59 (describing "material 166" for a third seal member 165 that "sticks occlusively to itself"). Moreover, as we noted at institution, Schaffer's broader listing of materials that may be used to form the seal module overlaps with materials used for the similar collapsible elongate members in other asserted art and in the '011 patent; Inst. Dec. 37–38; Ex. 1006 ¶ 16 ("cylindrical diaphragm of the valve may be constructed from a[n] elastomeric material such as silicone rubber"); Ex. 1001, 7:19–27 ("elongate member . . . can comprise an elastic, resilient material that may comprise silicone, urethane, ethylene-vinyl acetate, natural or synthetic rubbers or other elastomers known in the art").

Patent Owner's argument that Petitioner's proposed modification could provide a less effective seal in certain scenarios is also unavailing. PO Resp. 51–52 (showing alleged "Gaps" when a string is used and two instruments are inserted side-by-side). First, obviousness does not require that a proposed modification of the prior art provide superior performance in all possible circumstances in which the modified device might be used. Combinations that "may be inferior for certain purposes" may still be obvious. *In re Mouttet*, 686 F.3d 1322, 1334 (Fed. Cir. 2012) ("This court has further explained that just because better alternatives exist in the prior art does not mean that an inferior combination is inapt for obviousness purposes"); *In re Fulton*, 391 F.3d 1195, 1200 (Fed. Cir. 2004) ("[O]ur case law does not require that a particular combination must be the preferred, or the most desirable, combination described in the prior art in order to provide motivation for the current invention.").

Second, Patent Owner's suggestion that Schaffer's valve could provide a better seal in the illustrated two-instrument example presumes that Schaffer's valve includes the highly compliant seal module material that is capable of deforming to fill in those interstices between the two instruments. *Id.* (citing Ex. 1005 ¶ 68). That material is optional, as discussed above. Without that material, it is not evident that Schaffer's two U-shaped actuating members would outperform Hartley's string or Eller's wire in the hypothetical two-instrument scenario. Ex. 1014 ¶ 35 (testifying "Patent Owner does not explain how the illustration would be any different if the string/wire were replaced with two U-shaped actuating members" and

"[b]ecause of the non-compliant seal depicted in the illustration, the same gaps would exist with U-shaped actuating members").[24]

Patent Owner's related contention that Petitioner agrees gaps will form whether rigid U-shaped actuating members or a string/wire is used misunderstands Petitioner's argument in support of obviousness based on the combination of Schaffer with Hartley or Eller. PO Sur-reply 16–17 (citing Ex. 1014 ¶ 35). Petitioner was addressing gaps that might remain if Schaffer's U-shaped members were somehow made flexible and yet each member otherwise remained fixed to their respective actuator button at two points of attachment. *See* Pet. Reply 23–24 (arguing the two fixed attachment points for each actuator "can prevent the U-shaped actuating members from completely conforming to the exterior of a tool" in some cases (e.g., tool with smaller diameter than the distance between the points of attachment)). That is not germane to the modification being proposed for Grounds 3 and 4, where Hartley's string or Eller's wire is looped at least one time around the central lumen and the opposing ends of that string/wire are attached at one point to opposing actuator buttons. *See, e.g.*, Pet. 37–38 (demonstrative illustrating the combination); Ex. 1003 ¶¶ 84–88 (testifying how this modification would be made and why the POSA would have

[24] The '011 patent, with the use of its filament (e.g., one or more strings or wires), discloses that it provides a "robust" seal around a wide range of tool sizes and shapes, "as well as around multiple tools of differing sizes simultaneously." *See, e.g.*, Ex. 1001, 2:4–10. We do not see why the proposed modification of Schaffer to include a flexible string/wire would provide a seal any less effective than what the patent purports to describe when single or multiple tools are used. Any suggestion by Patent Owner that a flexible string or wire would be unable to provide at least a suitable seal in these circumstances is, thus, also at odds with its own patent.

reasonably expected success with it). For reasons already explained above, we find that the proposed modification would have provided a potential improvement insofar as the string or wire can more precisely and uniformly constrict the lumen around its entire circumference against various tools, such as a large-bore, round cross-sectioned catheter.

We also find unpersuasive Patent Owner's argument that the proposed modification of Schaffer changes its principle of operation. PO Resp. 52–60. As an initial matter, Patent Owner never clearly defines what it regards as Schaffer's principle of operation. Patent Owner addresses Schaffer's disclosures related to "forcible disengagement" and further references "durability" and "ease of manufacturing," but does not explain persuasively why those considerations constitute Schaffer's principle of operation. *Id.*; Pet. Reply 8 ("PO presumes that forcible disengagement, easy assembly, and durability define Schaffer's 'principle of operation'" but "PO identifies no part of Schaffer that supports this presumption and none exists"). For reasons discussed below, we define Schaffer's principle of operation differently and, in any event, find that the proposed modification of Schaffer is not materially at odds with the considerations noted by Patent Owner: durability; forcible disengagement; and easy manufacture/assembly.

We generally agree with Petitioner's articulation of Schaffer's principle of operation. Pet. Reply 8–9. As Petitioner notes, Schaffer's abstract and background explain that Schaffer describes valves intended to seal with or without an instrument in place. *Id.* (citing Ex. 1005, Abstract, ¶ 8). The valves do so by applying a constricting or compressing force on a tube to seal against the passage of fluid or gas. *See, e.g.*, Ex. 1005 ¶¶ 75–77 (describing aspects of the embodiment in Figs. 30–34). Some embodiments use, for example, spring-actuated buttons to apply that force to the tube, with

that force being transferred to the tube by U-shaped actuating members. *Id.* Other embodiments use, for example, a separate tool such as a "clamp" or "forceps" to provide an occlusive side force or "squeezing" on the seal module to provide a seal. *See, e.g.*, *id.* ¶ 74, Fig. 27 (showing clamp 300). Schaffer explains that the compressed tube can "retract to an uncollapsed configuration" when the force is released, thereby reestablishing fluid flow. *See, e.g.*, *id.* ¶ 77. Thus, we find that Schaffer's principle of operation is to use spring-actuated buttons (or another modality, such as a clamp) to apply a constricting or compressing force (e.g., via U-shaped members like shown in Figs. 30–34) to selectively collapse and release the tube, thereby selectively closing and opening the valve to fluid flow. Ex. 1014 ¶ 38–39. This principle of operation is materially unchanged if Hartley's string or Eller's wire is substituted for Schaffer's U-shaped actuating members. Ex. 1003 ¶¶ 82–87; Ex. 1014 ¶¶ 38–39.

Turning to the three considerations raised by Patent Owner, we start with "durability." As we discussed above, Schaffer discloses a need for a "durable" stasis valve. Ex. 1005 ¶ 8. Beyond this background mention, it is not clear that durability defines Schaffer's principle of operation. But assuming it did, there is insufficient evidence here to suggest that the proposed modification of Schaffer would lack durability. Ex. 2008 ¶ 169. The evidence, on balance, supports the opposite conclusion. Eller, for instance, teaches that its flexible wire can be comprised of braided materials, polypropylene, polyurethane, stainless steel, or titanium. Ex. 1007, 15:41–56. Materials such as these would have been considered extremely durable. *See, e.g.*, Ex. 1014 ¶ 48 (testifying a POSA in 2017 would have known of many durable materials usable for forming a string or wire in a medical device, "such as polypropylene or other suture material"); Ex. 1015 (Zalesky

Tr.), 169:16–170:11 (testifying that "polypropylene, polyurethane, suture catgut are amazingly durable" as well as "small-braid" wire, and a POSA would have had access to those materials before 2017).

Turning to "forcible disengagement," this phrase (or a derivative thereof) is, by our count, mentioned only twice in Schaffer. Ex. 1005 ¶¶ 77 ("Such movement allows each engaged actuating member 55 to *forcibly disengage* opposing outer walls 27 of seal module 100 allowing the portion 108 of the containment structure 160 to retract to an uncollapsed configuration.") (emphasis added), 80 (substantially the same disclosure). We are skeptical that this phrase, which appears scarcely and without any special emphasis in Schaffer, somehow defines the principle of operation.

Regardless, we are unpersuaded that Hartley's string or Eller's wire—in the modified valve of Schaffer—would not "forcibly disengage" the seal module. When the buttons are pressed, a force is applied that releases the actuating members (or the string/wire in the case of the modification) to disengage the seal module, allowing it to return to an open configuration. Ex. 1014 ¶ 41. Patent Owner appears to interpret "forcibly disengage" as meaning that the actuating members must physically separate and come out of contact with the seal module. PO Resp. 55 (stating that, if Schaffer's seal module expands against Hartley's string when tension is released, the string would never forcibly disengage the seal module). Schaffer never shows that. As Petitioner points out, "Schaffer always depicts the actuating members in contact with the seal module," whether the valve is open or closed. Pet. Reply 9; Ex. 1005, Figs. 32–34; Ex. 1008, Figs. 32–34. And, even if "forcible disengagement" or other disclosure in Schaffer tends to show that the actuating members are rigid, Petitioner persuades us that a POSA would have understood the substitution of flexible structures—Hartley's string or

Eller's wire—as potentially beneficial, rendering the *claimed subject matter* obvious. *Axonics, Inc. v. Medtronic, Inc.*, 73 F.4th 950, 957 (Fed. Cir. 2023) (noting the "inquiry is not whether a relevant artisan would combine a first reference's feature with a second reference's feature to meet requirements of the first reference that are not requirements of the claims at issue"); *Intel Corp. v. Qualcomm Inc.*, 21 F.4th 784, 800 (Fed. Cir. 2021) (holding "the intended purpose of [the prior art] does not control" the § 103 inquiry).

Patent Owner's further contention that Schaffer's "seal module could stick to and retain Hartley's string or Eller's wire in the closed position," rendering the modified valve inoperable, misinterprets Schaffer's teachings. PO Resp. 55. This argument presumes that Schaffer requires the use of "sticky" material for forming the seal module. It does not, as we explained above. Moreover, as shown in Figures 32 and 34, Schaffer's valve includes a containment structure 160 that surrounds the seal member(s) that form the seal module 100. Ex. 1008, Fig. 32, 34. The U-shaped actuating members (or the string/wire in the modified valve) need not directly contact the material forming any seal member, but instead would directly contact the containment structure. *See, e.g.*, Ex. 1005 ¶¶ 55, 58, 60, 75, 77 (illustrative disclosure related to containment structure 160), Figs. 12–15, Figs. 30–34.

Turning to the last consideration offered by Patent Owner that allegedly defines Schaffer's principle of operation, easier manufacture and assembly, we disagree that such a consideration undermines Petitioner's challenge in Grounds 3 and 4. The manufacture and assembly techniques cited by Patent Owner are only examples in Schaffer. Ex. 1005 ¶¶ 82–83 (describing "valve 10, *in one option*, is made from machining pre-existing amounts of metals and/or plastics"; describing, "[i]n an example where the stasis valve 10 includes two actuators" that actuator buttons may be

completely compressed and held while a seal module is inserted through the valve's housing). We are unpersuaded that such optional manufacturing or assembly techniques translate into a definition of Schaffer's principle of operation for its valves.

Patent Owner contends that substituting Hartley's string or Eller's wire would make valve assembly more challenging. PO Resp. 57–59 (citing Ex. 2008 ¶¶ 162–168). We credit Mr. Thornton's testimony, however, that a skilled artisan would have been aware of other manufacturing and assembly methods that could have been employed to substitute a flexible string or wire without much difficulty. Ex. 1014 ¶¶ 45–47 (testifying, *inter alia*, that a tapered fixture could have been used to introduce the seal module through the looped string/wire already attached to the buttons, or Schaffer's housing could be formed in two pieces that are assembled and closed after the internal components (springs, string, etc.) are configured). Moreover, as discussed above, Hartley and Eller disclose that many ways were known for attaching the ends of the string or wire to an actuator (knotting, welding, friction fit, adhesives) in a hemostasis valve, and Eller suggests that such teachings are not limited to rotary actuators like exemplified in Hartley or Eller. Ex. 1006, Figs. 3–4; Ex. 1007, 8:27–44, 14:37–53. We find that the preponderance of the evidence supports Petitioner and that the engineering techniques needed to implement the proposed modifications would have been routine and straightforward.

Patent Owner's argument that the modifications proposed by Petitioner under Grounds 3 and 4 are not "simple" because no single prior art reference shows a hemostasis valve with a flexible string or wire attached to two actuators is unavailing. Patent Owner's argument is tantamount to a complaint that none of Schaffer, Hartley, or Eller is anticipating. The

challenge is obviousness and "it suffices . . . that a person of ordinary skill in the art would have been motivated to combine the prior art in a way such that the combination discloses the claim limitation." *Masimo Corp. v. Apple Inc.*, No. 2022-1894, 2024 WL 111647 at *3 (Fed. Cir. Jan. 10, 2024) (internal quotation marks omitted); *Fleming*, 28 F.4th at 1222. As explained above, we find that a POSA would have been motivated to make the proposed changes and that the implementation details needed to effectuate those changes would have drawn on known techniques (e.g., knotting, etc.), obviously extended to a linear actuator valve like shown in Schaffer. Altogether, we find that Petitioner's proposed modification would require no more than ordinary skill, and we credit Mr. Thornton's testimony on that issue. *See, e.g.*, Ex. 1003 ¶¶ 84–88, 97–100. Further, even assuming the modifications made some aspects of manufacturing more challenging as argued by Patent Owner, the tradeoff is a valve that would have been expected to more precisely constrict the lumen around at least some types of inserted surgical tools—yielding a worthwhile benefit as discussed above.

Finally, Patent Owner's argument that "more plausible" changes would have been made if there was a sealing problem with Schaffer's valve is flawed and fails to undermine Petitioner's challenge. PO Resp. 60–62 (arguing a POSA could have more simply adjusted Schaffer's spring force or the properties of the seal module). That a POSA might have considered the alternative changes to Schaffer's valve suggested by Patent Owner—or even considered those changes to be superior to those proposed by Petitioner—does not negate a showing of obviousness. Indeed, obviousness is not limited to the best or simplest solution. *Intel*, 21 F.4th at 800 ("[It is] not necessary to show that a combination is the *best* option, only that it be a *suitable* option.") (internal quotation marks omitted). For the reasons

explained by Petitioner and Mr. Thornton, which we discussed above, we find the POSA would have had reasons to modify Schaffer's valve as proposed and reasonably expected the modified valve would be, not only suitable, but likely improved.

c) Conclusion

Upon considering all arguments and evidence presented through trial, we determine that Petitioner has shown by a preponderance of the evidence that claims 1–9 would have been obvious under Grounds 3 and 4.

H. Ground 5: Obviousness over Hartley and Eller

Petitioner contends that claims 1–3, 5, 6, and 9 would have been obvious over a combination of Hartley and Eller. Pet. 70–84; Ex. 1003 ¶¶ 144–181. Petitioner contends that Hartley discloses all the limitations of independent claim 1 except for the "biasing system," which Petitioner argues is disclosed by Eller and would have been obvious to add to Hartley's valve to ensure a quick seal during surgery. Pet. 70–79.

We find Petitioner's Ground 5 challenge unpersuasive. We agree with Patent Owner that Petitioner has not established that the modification of Hartley in view of Eller includes an actuator with a "first member" and a "second member" as claimed. PO Resp. 68–70. The alleged "first member" and "second member" cited by Petitioner (Pet. 73) are simply opposite sides of one unitary rotary actuator in Hartley. *Id.* (citing Ex. 2008 ¶¶ 181–182 (citing, e.g., Ex. 1006, Fig. 3 (single rotary actuator 12)). Petitioner has not shown that the "first member" and "second member" of claim 1 (or the challenged dependent claims) read on Hartley's single, unitary actuator or

portions of that actuator where the string is knotted. Pet. 72 (citing Ex. 1006, Fig. 1, ¶ 31; Ex. 1003 ¶¶ 152–153).[25]

IV. PATENT OWNER'S OBJECTION

Patent Owner objected to slide 44 of Petitioner's Demonstratives (Ex. 1023) for Oral Argument. Paper 33. Patent Owner contends that slide 44 "includes both arguments and evidence not found in the record" inasmuch as slide 44 refers to claims of the '384 patent (Ex. 1018). *Id.* at 1.

Demonstratives are not evidence. But neither are demonstratives a vehicle for a party to advance new argument or new evidence at the final oral hearing. Paper 25 (Hearing Order), 3–5 (noting the "strict prohibition against presentation of new evidence or arguments at a hearing" and recommending each demonstrative cite to papers in the record to show that argument or evidence referenced in a demonstrative was already developed in the existing record). Petitioner's slide 44 includes no citation to any paper (e.g., Petition, Petitioner's Reply) where any argument about the '384 patent was raised in this case. Although Petitioner's slide 44 cites to paragraph 11 of Mr. Thornton's supplemental declaration (Ex. 1014), we see no instance where Petitioner cited to or developed any argument based on that portion of Mr. Thornton's testimony in any paper. Patent Owner's objection is, therefore, sustained.

---

[25] We explained at institution, based on similar reasoning, that Petitioner was unlikely to prevail under Ground 5. Inst. Dec. 42. Petitioner did not address the Board's reasoning or provide any further argument on Ground 5 during trial. *See generally* Pet. Reply; PO Sur-reply 4 ("Petitioner did not address ground 5 in the reply to the POR").

V. PATENT OWNER'S MOTION TO EXCLUDE

Patent Owner moves to "exclude Exhibits 1003 and 1014" (the declarations of Mr. Thornton) "in their entirety, or in the alternative," the paragraphs of those declarations related to Schaffer (Ex. 1005) based on Mr. Thornton's allegedly improper reliance on Exhibit 1008 "to fill in the gaps in the Schaffer Publication." Paper 28 ("Motion" or "Mot."), 2 (listing paragraphs), 6 (stating "Exhibit 1008 consists of replacement drawings submitted to the USPTO during prosecution of Schaffer and include features not visible in the Schaffer Publication's figures"). Patent Owner also moves to exclude Exhibit 1008 "in its entirety because it is not part of the Schaffer publication." *Id.* at 8–9. Petitioner opposes. Paper 29 ("Opposition" or "Opp."); Paper 30 ("Mot. Reply").

Patent Owner's Motion is *denied*. We explain below.

1. Exhibits 1003 and 1014

Patent Owner moves to exclude Mr. Thornton's declaration testimony in its entirety because Mr. Thornton's opinions are allegedly based on an "Incorrect" POSA Definition. Mot. 2–5. According to Patent Owner, Mr. Thornton's definition of the POSA level is too low insofar as it does not require direct experience designing hemostasis valves. *Id.*

Patent Owner waived any evidentiary objection to the testimony in Exhibits 1003 and 1014 based on an allegedly "incorrect" POSA definition. The Office's rules require objections be timely and they "must identify the grounds for the objection with sufficient particularity to allow correction." 37 C.F.R. § 42.64(b)(1). Although Patent Owner timely objected to Mr. Thornton's testimony in Exhibits 1003 and 1014, nowhere did Patent Owner reference any issue with the POSA definition as the basis for the objection. Paper 9, 1–2; Paper 19, 1–2. To the contrary, Patent Owner cited

an allegedly "incorrect interpretation of the challenged claims" and "an incomplete and incorrect understanding and interpretation" of Schaffer. *See, e.g.*, Paper 9, 1–2. Even accepting the dubious proposition that disagreeing with an expert's interpretation of the claims or prior art could qualify as a meritorious objection, Patent Owner's objections here lacked the particularity needed to put Petitioner on notice about any alleged defect related to the POSA definition.

We also addressed Patent Owner's criticisms of Petitioner's and Mr. Thornton's proposed POSA level above. *See supra* Section III.B. As we explained, Mr. Thornton is qualified as at least a POSA under either party's proposed definition and, thus, may offer reliable and probative testimony in this case. *Kyocera Senco Indus. Tools Inc. v. Int'l Trade Comm'n*, 22 F.4th 1369, 1376–77 (Fed. Cir. 2022) (holding, "[t]o offer testimony from the perspective of a skilled artisan in a patent case . . . a witness must at least have ordinary skill in the art. Without that skill, the witness' opinions are neither relevant nor reliable"); Opp. 2 (arguing that Patent Owner does not dispute that Mr. Thornton qualifies as a POSA and citing Dr. Zalesky's testimony (Ex. 1015, 12:3–5) agreeing Mr. Thornton has expertise in hemostasis valves and catheters). Patent Owner argues that, "[l]ike the testimony of an expert lacking the experience of a POSA, testimony from the perspective of an individual lacking the experience of a POSA should also be excluded." Mot. 3. But Patent Owner cites no authority that directly supports the relief it seeks and that would justify the extraordinary result of excluding the entirety of Mr. Thornton's testimony.

We deny Patent Owner's motion to exclude Exhibits 1003 and 1014 in their entirety. To the extent Patent Owner further objects and moves to

exclude certain paragraphs of Mr. Thornton's declarations that rely on Exhibit 1008, we address that issue in the following section.

2. Exhibit 1008

Patent Owner moves to exclude Exhibit 1008 and those paragraphs of Mr. Thornton's declarations that rely on Exhibit 1008. Mot. 5–9. Patent Owner argues this evidence should be excluded under F.R.E. 702 and 703 (as allegedly not the result of reliable principles, and not the type of evidence reasonably relied upon by experts in the field), and F.R.E. 401, 402, and 403 (as allegedly irrelevant, prejudicial, and confusing). At its core, Patent Owner's objection is that Petitioner's Grounds 1–4 are based on Schaffer (Exhibit 1005) and the Schaffer prosecution drawings (Exhibit 1008) are not officially part of Schaffer. *Id.*

Concerning the anticipation challenge (Ground 1), Petitioner's challenge fails on this record whether the clearer prosecution drawings in Exhibit 1008 are considered in the analysis of anticipation by Schaffer, or not. Whether those prosecution drawings are considered "extrinsic evidence" to Schaffer (as argued by Patent Owner) or publicly-available "intrinsic evidence" with respect to Schaffer (as Petitioner argues) does not change our Decision on Ground 1. Opp. 10–11; Mot. Reply, 3–5. Patent Owner's motion is, therefore, moot as to Ground 1.

For the obviousness grounds (Grounds 2–4), we see no valid basis to exclude Exhibit 1008. It is undisputed that Exhibit 1008 provides clearer versions of substantially the same drawings found in Schaffer. *Compare* Ex. 1005, Fig. 32 (valve with dark shading), *with* Ex. 1008, Fig. 32 (clear version of valve). Nor does Patent Owner dispute that Exhibit 1008 is itself prior art and that the subject drawings were publicly available once Schaffer published. Pet. 17 n.2 (noting the drawings became publicly available on

December 4, 2003 under 37 C.F.R. § 1.11); Opp. 10–11 (citing Ex. 1013 (certified file history of Schaffer), 66–84 (drawings as found in Ex. 1008)). In this proceeding, both parties' experts rely on the supplemental drawings in Exhibit 1008 and we find no merit in the position that a POSA would not consider those drawings relevant to better understanding what is shown in Schaffer (Ex. 1005). *See, e.g.*, Ex. 1003 ¶ 54 (reproducing various drawings in Ex. 1008 and explaining why those clearer versions are used); Ex. 2008 ¶¶ 61, 63–64 (using clearer drawings from Exhibit 1008 when summarizing Schaffer's teachings).

Patent Owner argues that Exhibit 1008 "cannot be used to fill in gaps in the Schaffer publication." Mot. Reply, 3–4; Mot. 5–6, 8–9. Yet the precedents Patent Owner cites restrict the use of external "gap" filling when the alleged basis of unpatentability is *anticipation*—not obviousness. *See e.g., Wilson v. Martin*, 789 F. Appx. 861, 869 (Fed. Cir. 2019) (holding the "purpose of extrinsic evidence *in an anticipation analysis* is to educate the decision-maker to what the reference meant . . ., not to fill gaps in the reference" (emphasis added) (internal quotation marks omitted); *In re Baxter Travenol Labs.*, 952 F.2d at 390 (remarking, when analyzing "the *anticipatory* teaching of a reference," that extrinsic evidence may be "used to explain, but not expand, the meaning of a reference") (emphasis added).

Patent Owner cites no authority that supports excluding the allegedly "extrinsic" Schaffer drawings in Exhibit 1008 as part of an obviousness analysis. Nor is there any undue prejudice or confusion here that would substantially outweigh the relevance of Exhibit 1008 because it has been clear since the start of this proceeding that Petitioner was relying on the clearer versions of the Schaffer drawings to support its grounds. *See, e.g.*, Pet. 4, 17, 21, 23, 25–27, 29–30, 38, 46, 50 (using various drawings from

Ex. 1008 and annotations thereof); *see also id.* at 17 n.2 (explaining why the drawings in Ex. 1008 are used); Inst. Dec. 23, 29–31 (citing and reproducing annotated versions of drawings from Ex. 1008); Prelim. Resp. 34 (providing annotated version of Fig. 34 from Ex. 1008).

For the reasons above, we deny Patent Owner's motion to exclude Exhibit 1008 or the paragraphs of Mr. Thornton's declarations that rely on it.

VI. CONCLUSION[26]

Petitioner has shown by a preponderance of the evidence that the challenged claims are unpatentable as summarized in the table below.

Claims	**35 U.S.C. §**	**Reference(s)/Basis**	**Claims Shown Unpatentable**	**Claims Not shown Unpatentable**
1–9	102	Schaffer		1–9
1–9	103	Schaffer		1–9
1–9	103	Schaffer, Hartley	1–9	
1–9	102	Schaffer, Eller	1–9	
1–3, 5, 6, 9	103	Hartley, Eller		1–3, 5, 6, 9
Overall Outcome			1–9	

[26] Should Patent Owner wish to pursue amendment of the challenged claims in a reissue or reexamination proceeding subsequent to the issuance of this decision, we draw Patent Owner's attention to the April 2019 *Notice Regarding Options for Amendments by Patent Owner Through Reissue or Reexamination During a Pending AIA Trial Proceeding*. *See* 84 Fed. Reg. 16,654 (Apr. 22, 2019). If Patent Owner chooses to file a reissue application or a request for reexamination of the challenged patent, we remind Patent Owner of its continuing obligation to notify the Board of any such related matters in updated mandatory notices. *See* 37 C.F.R. § 42.8(a)(3), (b)(2).

VII. ORDER

In consideration of the foregoing, it is hereby:

ORDERED that Petitioner has proved by a preponderance of the evidence that claims 1–9 are unpatentable;

FURTHER ORDERED that Patent Owner's Motion to Exclude (Paper 28) is *denied*; and

FURTHER ORDERED that, because this is a Final Written Decision, parties to the proceeding seeking judicial review of the decision must comply with the notice and service requirements of 37 C.F.R. § 90.2.

FOR PETITIONER:

Joshua J. Stowell
Joseph R. Re
Brian C. Barnes
KNOBBE, MARTENS, OLSON & BEAR, LLP
Joshua.Stowell@knobbe.com
Joe.Re@knobbe.com
Brian.Barnes@knobbe.com

FOR PATENT OWNER:

Joseph Hamilton
Paul Parker
PERKINS COIE LLP
hamilton-ptab@perkinscoie.com
parker-ptab@perkinscoie.com