Exhibit H-03

Invalidity of U.S. Patent No. 11,840,970 ("the '970 Patent") in view of Kubota DF972 Workshop Manual Gasoline, LPG, Natural Gas Engine, WG972-E2, DF972-E2, DG972-E2 ("Kubota DF972 Workshop Manual")

Kubota DF972-E2 Workshop Manual ("Kubota DF972 Workshop Manual") was first publicly available in June 2009. Kubota DF972 Workshop Manual anticipates asserted claims 1, 2, 11, 20–23, and 33 of U.S. Patent No. 11,840,970 ("the '970 Patent") under 35 U.S.C. § 102. Kubota DF972 Workshop Manual also renders obvious asserted claims 1, 2, 11, 20–23, and 33 of the '970 Patent under 35 U.S.C. § 103, alone based on the state of the art.

To the extent Champion alleges that Kubota DF972 Workshop Manual does not disclose any particular limitation of the asserted claims 1, 2, 11, 20–23, and 33 in the '970 Patent, either expressly or inherently, it would have been obvious to a person of ordinary skill in the art as of the priority date of the '970 Patent to modify Kubota DF972 Workshop Manual and/or to combine the teachings of Kubota DF972 Workshop Manual with their knowledge of the state of the art in a manner that would render the asserted claims of these patents invalid as obvious.

Any disclosures identified for each limitation of this patent in the aforementioned Exhibits or in the Invalidity Contentions Cover Pleading may be combined with the disclosures of Kubota DF972 Workshop Manual identified below for the same limitation to render that limitation obvious. A POSA would have found such a combination/modification obvious for the reasons discussed herein and in the Invalidity Contentions Cover Pleading.

The citations to portions of any reference in this chart are exemplary only. For example, a citation that refers to or discusses a figure or figure item should be understood to also incorporate by reference that figure and any additional descriptions of that figure as if set forth fully therein. Generac reserves the right to rely on the entirety of the references cited in this chart to show that the asserted claims of the '970 Patent are invalid. Citations presented for one claim limitation are expressly incorporated by reference into all other limitations for that claim as well as all limitations of all claims on which that claim depends. Generac also reserves the right to rely on additional citations or sources of evidence that also may be applicable, or that may become applicable in light of claim construction, changes in Champion's infringement contentions, and/or information obtained during discovery as the case progresses.

Claim Element	Evidence
1. (Preamble) A dual fuel generator and fuel delivery system comprising:	Kubota DF972 Workshop Manual discloses a dual fuel generator and fuel delivery system comprising: *See e.g.*: Kubota DF972 Workshop Manual at 1: Workshop Manual Gasoline, LPG, Natural Gas Engine WG972-E2, DF972-E2, DG972-E2. Kubota DF972 Workshop Manual at 8: **2. SPECIFICATIONS** Model: WG972-E2 / DF972-E2 Number of Cylinder: 3 Type: WG972-E2: Vertical, water cooled, 4-cycle Gasoline engine; DF972-E2: Vertical, water cooled, 4-cycle Dual Fuel (Gasoline / LPG) engine — Gasoline fuel / LPG fuel

Claim Element	Evidence
	Kubota DF972 Workshop Manual at 65: 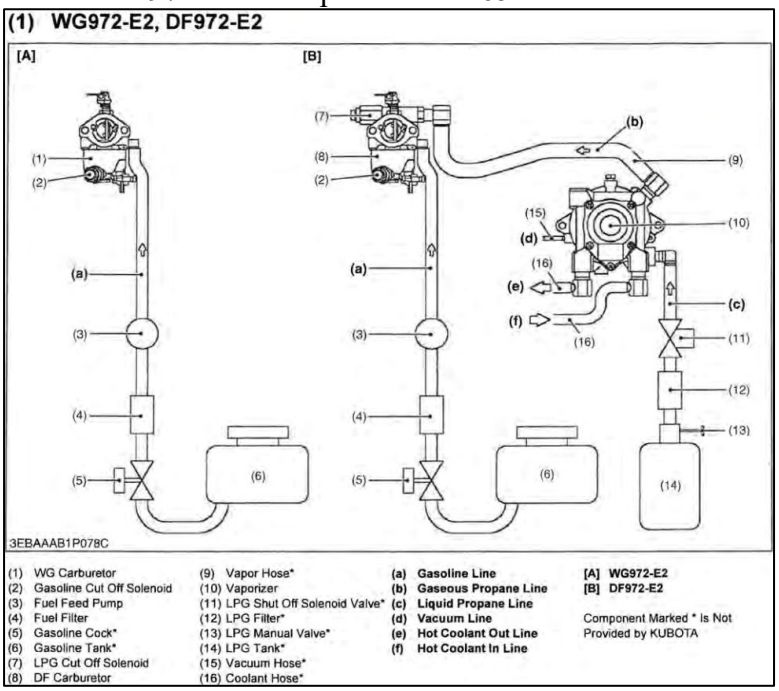 Kubota DF972 Workshop Manual at 77: 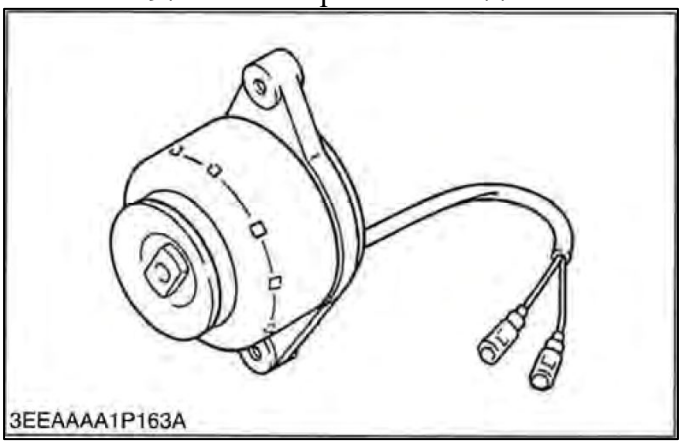 This alternator is an 8-8 pole, rotating magnet type generator. It is simple in construction, consisting of a stator and rotor. The rotor is made up of eight permanent magnet pole pieces assembled on a shaft and rotates on the center of the stator around which eight electromagnetic coils are provided for. This alternator produces higher voltage ln slow speed rotation, and charges electric current to the battery during engine idling.

Claim Element	Evidence
	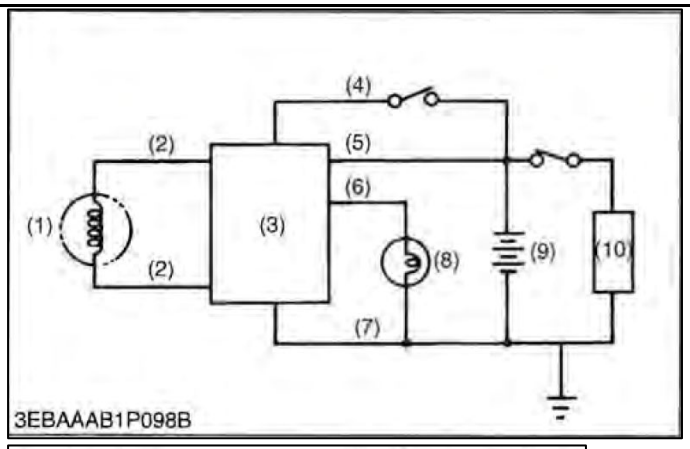 (1) Alternator (2) Blue Lead Wire (3) Regulator (4) Yellow Lead Wire (5) Red Lead Wire (6) Overrunning Clutch (7) Black Lead Wire (8) Charge Lamp (9) Battery (10) Load The regulator performs rectification and voltage regulation. The regulator converts AC into DC which flows through the power consuming circuits and the battery, and also charges the battery. If however, the battery voltage exceeds a certain level. The DC current is cut off from the charging circuit to prevent overcharging.
(a) a dual fuel generator comprising:	Kubota DF972 Workshop Manual discloses a dual fuel generator comprising: *See e.g.*: Kubota DF972 Workshop Manual at 1: Workshop Manual Gasoline, LPG, Natural Gas Engine WG972-E2, DF972-E2, DG972-E2. Kubota DF972 Workshop Manual at 8: **2. SPECIFICATIONS** Model: WG972-E2 / DF972-E2 Number of Cylinder: 3 Type: WG972-E2 — Vertical, water cooled, 4-cycle Gasoline engine; DF972-E2 — Vertical, water cooled, 4-cycle Dual Fuel (Gasoline / LPG) engine (Gasoline fuel / LPG fuel) Kubota DF972 Workshop Manual at 77:

<table>
<tr><th>Claim Element</th><th>Evidence</th></tr>
<tr><td></td><td>
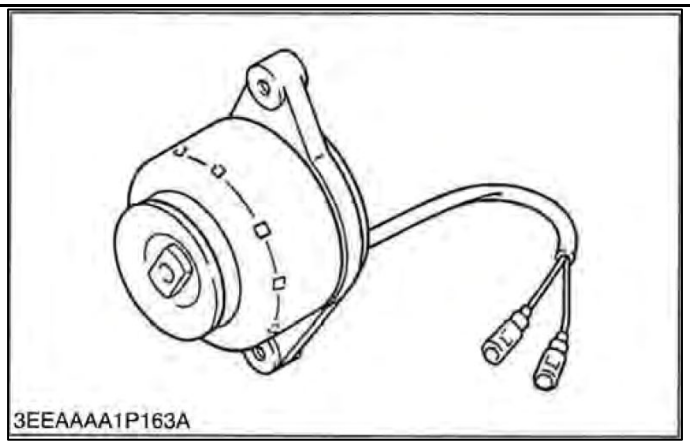

This alternator is an 8-8 pole, rotating magnet type generator. It is simple in construction, consisting of a stator and rotor. The rotor is made up of eight permanent magnet pole pieces assembled on a shaft and rotates on the center of the stator around which eight electromagnetic coils are provided for. This alternator produces higher voltage ln slow speed rotation, and charges electric current to the battery during engine idling.
</td></tr>
<tr><td>(a)(1) an engine configured to operate on a liquid fuel supplied from a liquid fuel source through a liquid fuel line and a gaseous fuel supplied from a pressurized fuel source through a gaseous fuel line, and</td><td>
Kubota DF972 Workshop Manual discloses an engine configured to operate on a liquid fuel supplied from a liquid fuel source through a liquid fuel line and a gaseous fuel supplied from a pressurized fuel source through a gaseous fuel line, See e.g.:

Kubota DF972 Workshop Manual at 1: Workshop Manual Gasoline, LPG, Natural Gas Engine WG972-E2, DF972-E2, DG972-E2.

Kubota DF972 Workshop Manual at 8:

2. SPECIFICATIONS

<table>
<tr><th>Model</th><th>WG972-E2</th><th colspan="2">DF972-E2</th></tr>
<tr><td>Number of Cylinder</td><td colspan="3">3</td></tr>
<tr><td rowspan="2">Type</td><td rowspan="2">Vertical, water cooled, 4-cycle Gasoline engine</td><td colspan="2">Vertical, water cooled, 4-cycle Dual Fuel (Gasoline / LPG) engine</td></tr>
<tr><td>Gasoline fuel</td><td>LPG fuel</td></tr>
</table>

Kubota DF972 Workshop Manual at 65:
</td></tr>
</table>

Claim Element	Evidence
	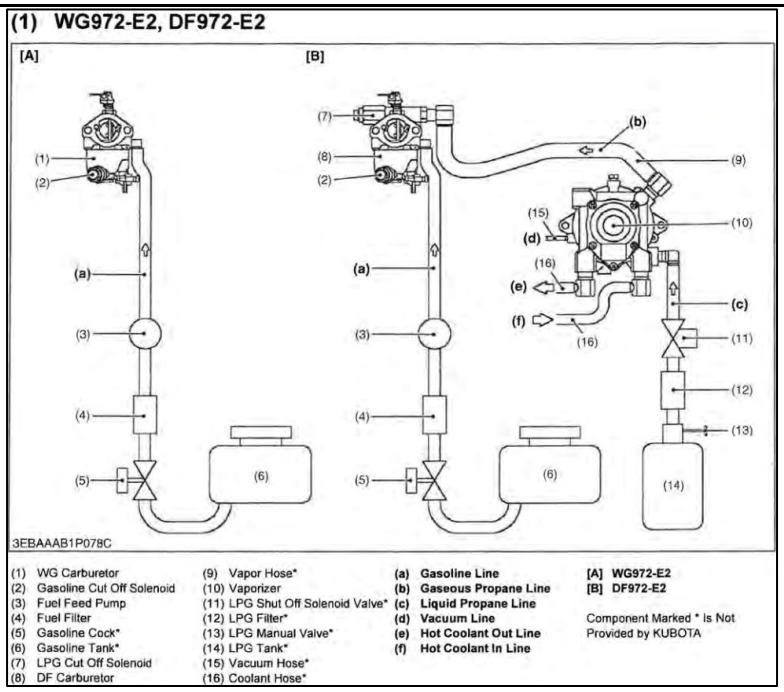 WG972-E2: The fuel is fed from the gasoline tank (6) through the fuel filter (4) to the WG carburetor (1) by the fuel feed pump (3). DF972-E2: This fuel system has 2 ways. Gasoline fuel is the same as WG972-E2. For LPG fuel, the liquid fuel stored in the LPG tank (14) is sent to vaporizer (10) by pressure in the gaseous phase in the tank through the LPG filter (12) and LPG shut off solenoid valve (11). The liquid fuel is evaporated in vaporizer and is sent to the DF carburetor (8) as a gaseous fuel of gas pressure near the atmospheric pressure. The DF carburetor (8) mixes the gas and air is supplied in the cylinder.
(a)(2) a carburetor attached to an intake of the engine to mix air and fuel and connect the liquid fuel line to the intake;	Kubota DF972 Workshop Manual discloses a carburetor attached to an intake of the engine to mix air and fuel and connect the liquid fuel line to the intake; *See e.g.*: Kubota DF972 Workshop Manual at 65:

Claim Element	Evidence
	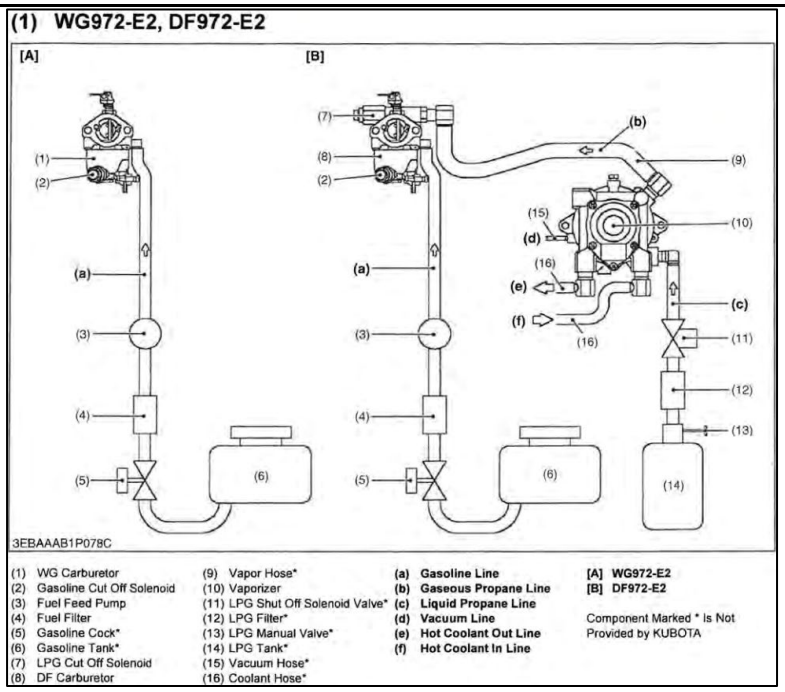 WG972-E2: The fuel is fed from the gasoline tank (6) through the fuel filter (4) to the WG carburetor (1) by the fuel feed pump (3). DF972-E2: This fuel system has 2 ways. Gasoline fuel is the same as WG972-E2. The liquid fuel is evaporated in vaporizer and is sent to the DF carburetor (8) as a gaseous fuel of gas pressure near the atmospheric pressure. The DF carburetor (8) mixes the gas and air is supplied in the cylinder. Kubota DF972 Workshop Manual at 68:

Claim Element	Evidence
	(2) Carburetor (DF972-E2) 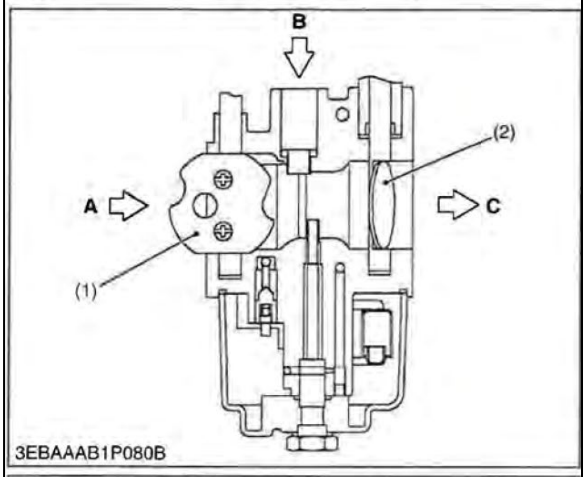 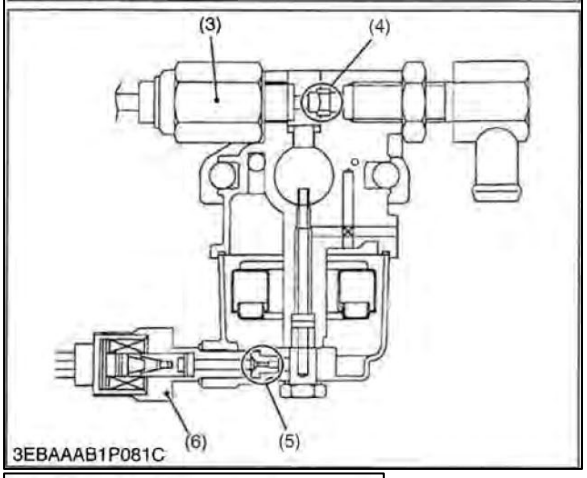 (1) Choke Valve (2) Throttle Valve (3) LPG Cut Off Solenoid (4) LPG Main Jet (5) Gasoline Main Jet (6) Gasoline Cut Off Solenoid (7) Main Switch (8) Fuel Select Switch (9) LPG Shut Off Solenoid Valve The mixer meters both fuel and air, and procedures an air/fuel mixture that has the proper ratio as required by the engine. When the engine starts, the LPG fuel flows out from main jet (4) to venture a constant amount and is mixed with air quantity corresponding to the opening of the throttle valve (1) and is supplied to the cylinder. Kubota DF972 Workshop Manual at 115:

Claim Element	Evidence
	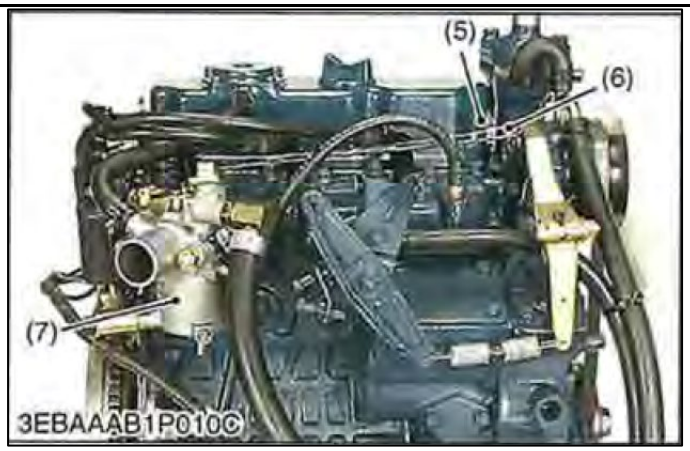 (1) Breather Hose (2) Air Cleaner Flange (3) Gasoline Solenoid Connector (4) LPG Solenoid Connector (5) Governor Rod spring (6) Governor Rod (7) Carburetor 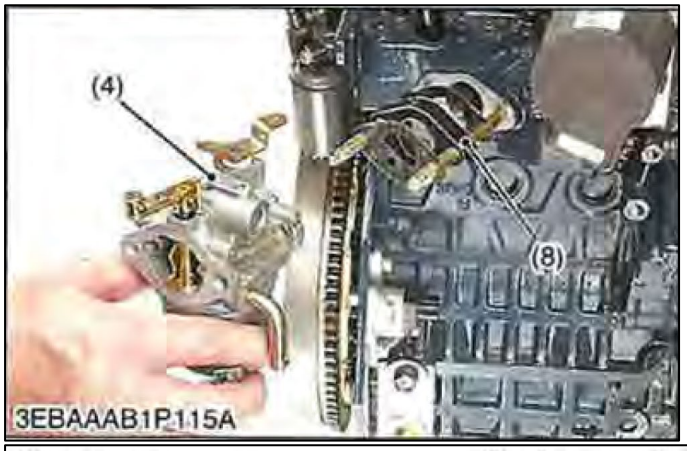 (1) Actuator (2) Air Cleaner Flange (3) Breather Hose (4) Carburetor (5) Governor Rod (6) Governor Rod Spring (7) Governor Lever (8) Carburetor Flange Kubota DF972 Workshop Manual at 119:

Claim Element	Evidence
(b) a fuel regulator system located off board the dual fuel generator, the fuel regulator system comprising:	Kubota DF972 Workshop Manual teaches a fuel regulator system located off board the dual fuel generator, including a "vaporizer 10" located off board the generator comprising a primary chamber and a secondary chamber. Kubota DF972 Workshop Manual at 65: 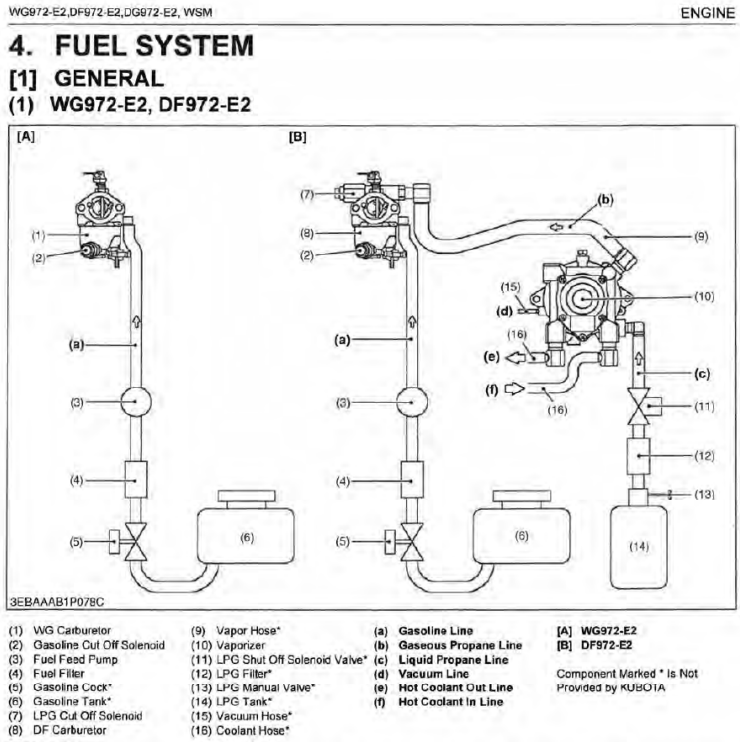 Kubota DF972 Workshop Manual at 10: **[3] LPG REGULATOR WITH VAPORIZER (DF972-E2)** When operating DF972-E2 on LPG, only a KUBOTA GENUINE LPG REGULATOR KIT can be used. 9Y1210318INI0005US0

Claim Element	Evidence
	[5] LENGTH OF THE LPG VAPOR HOSE (DF972-E2) The length of the LPG vapor hose between the LPG carburetor and LPG vaporizer must be within 280 to 320 mm (11.1 to 12.5 in.) The incorrect use of the hose may not conform to EPA and CARB EMISSION REGULATIONS. 9Y1210318INI0007US0 Kubota DF972 Workshop Manual at 65. **[3] VAPORIZER (DF972-E2)** 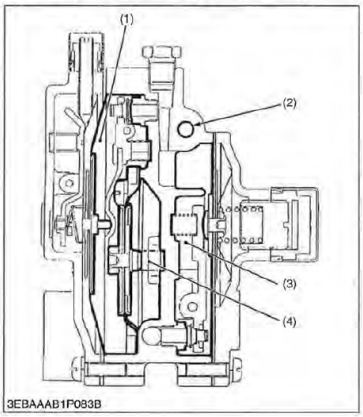 3EBAAAB1F083B Vaporizer is a device which converts the liquid fuel into the gaseous fuel and the following structures and functions are possessed. ■ **Primary Chamber** The liquid fuel is decompressed (the first decompression) and it is evaporated. ■ **Secondary Chamber** The fuel which flows in is decompressed from the primary chamber to the vicinity of the atmospheric pressure further (the second decompression). ■ **Water Passage** The coolant of the engine is made to circulate as a heat source to evaporate the LPG. ■ **Vacuum Lock Chamber** When the engine stops, the fuel from primary chamber is prevented from flowing out. (1) Secondary Chamber (3) Primary Chamber (2) Water Passage (4) Vacuum Lock Chamber 9Y1210318ENM0033US0 Kubota DF972 Workshop Manual at 69. WG972-E2,DF972-E2,DG972-E2, WSM ENGINE 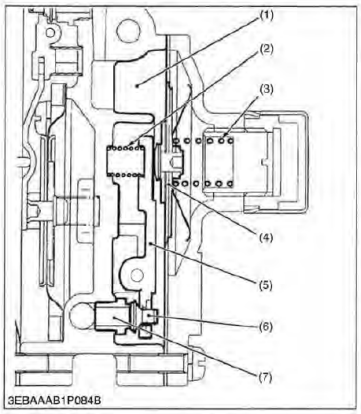 3EBAAAB1P084B **Primary Chamber** The liquid fuel which pushes the primary valve (6) open passes between the valve and the valve seat (7), enters primary chamber (1), and decompresses and is evaporated. When the inflow of the fuel continues and the primary chamber pressure rises more than the specified pressure 32.7 kPa (0.3 kgf/cm^2, 4.3 psi), the tension in the diaphragm spring (3) is overcome and do the push up of primary diaphragm (4). At this time, do the push up of primary valve lever spring (2) of primary valve lever (5), primary valve (6) is shut, and the inflow of the fuel is intercepted. The tension in the diaphragm spring (3) grows more than the primary chamber pressure when the fuel is consumed and the primary chamber pressure lowers more than a regulated value and a primary diaphragm is depressed below. The primary valve lever (5) is depressed at the same time. A primary valve opens and the fuel flows in again. When the diaphragm tears by any chance and the fuel flows in the primary diaphragm spring side, the primary diaphragm spring side is connected with second chamber in the balance passage so that the fuel should not flow out outside. (1) Primary Chamber (5) Primary Valve Lever (2) Primary Valve Lever Spring (6) Primary Valve (3) Primary Diaphragm Spring (7) Valve Seat (4) Primary Diaphragm 9Y1210318ENM0034US0 Kubota DF972 Workshop Manual at 70.

Claim Element	Evidence
	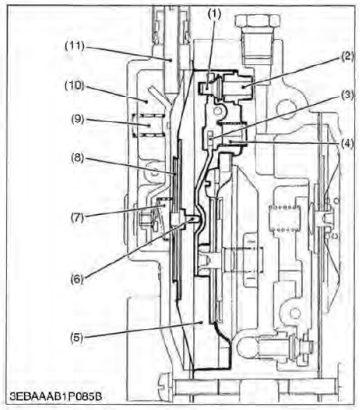 **Secondary Chamber** The fuel adjusted with primary chamber to the specified pressure enters secondary chamber (5) between secondary valve (1) and the valve seat (2) and is decompressed to the vicinity of the atmospheric pressure almost. A secondary valve is assembled to a part of the secondary valve lever (3) supported to body and is shut by the tension of the spring of a secondary valve spring (4). A secondary diaphragm pin (6) touches the edge besides this lever (3). The one side of secondary diaphragm (8) is faced in secondary chamber and the other side faces atmosphere chamber (10). When the engine stops, the atmospheric pressure is led in secondary chamber and a secondary valve is shut by the tension of a secondary valve spring. When the engine rotates, the negative pressure is generated in the venturi tube of the mixer. As for this negative pressure, working secondary diaphragm (8) is pulled to the second chamber side by the difference pressure with atmosphere chamber by second chamber. Kubota DF972 Workshop Manual at 71. 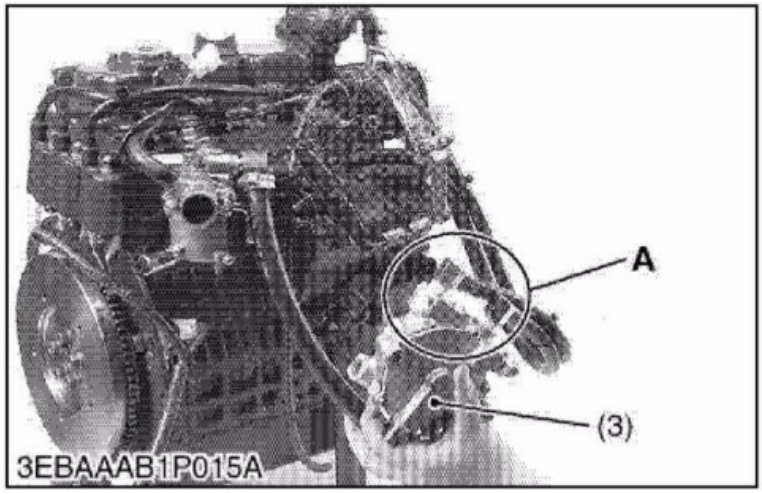 Kubota DF972 Workshop Manual at 106. The fuel regulator system is not mounted to the generator, it is therefore located off board (*i.e.* remotely).
(b)(1) a primary pressure regulator coupled to a service valve of the pressurized fuel source and configured to regulate the fuel supplied from the pressurized fuel source to a reduced pressure, and	Kubota DF972 Workshop Manual teaches a primary chamber that decompress and evaporate liquid LPG fuel supplied from "LPG tank 14" in the first stage.

Claim Element	Evidence
	WG972-E2,DF972-E2,DG972-E2, WSM ENGINE 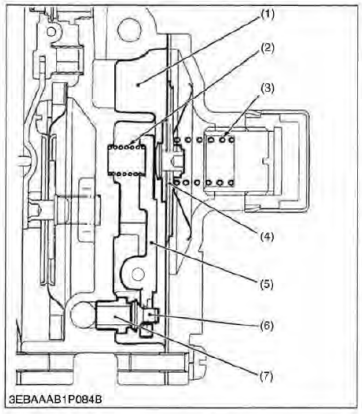 **Primary Chamber** The liquid fuel which pushes the primary valve (6) open passes between the valve and the valve seat (7), enters primary chamber (1), and decompresses and is evaporated. When the inflow of the fuel continues and the primary chamber pressure rises more than the specified pressure 32.7 kPa (0.3 kgf/cm^2, 4.3 psi), the tension in the diaphragm spring (3) is overcome and do the push up of primary diaphragm (4). At this time, do the push up of primary valve lever spring (2) of primary valve lever (5), primary valve (6) is shut, and the inflow of the fuel is intercepted. The tension in the diaphragm spring (3) grows more than the primary chamber pressure when the fuel is consumed and the primary chamber pressure lowers more than a regulated value and a primary diaphragm is depressed below. The primary valve lever (5) is depressed at the same time. A primary valve opens and the fuel flows in again. When the diaphragm tears by any chance and the fuel flows in the primary diaphragm spring side, the primary diaphragm spring side is connected with second chamber in the balance passage so that the fuel should not flow out outside. (1) Primary Chamber (5) Primary Valve Lever (2) Primary Valve Lever Spring (6) Primary Valve (3) Primary Diaphragm Spring (7) Valve Seat (4) Primary Diaphragm 9Y1210318ENN00340S0 Kubota DF972 Workshop Manual at 70. WG972-E2,DF972-E2,DG972-E2, WSM ENGINE **4. FUEL SYSTEM** **[1] GENERAL** **(1) WG972-E2, DF972-E2** 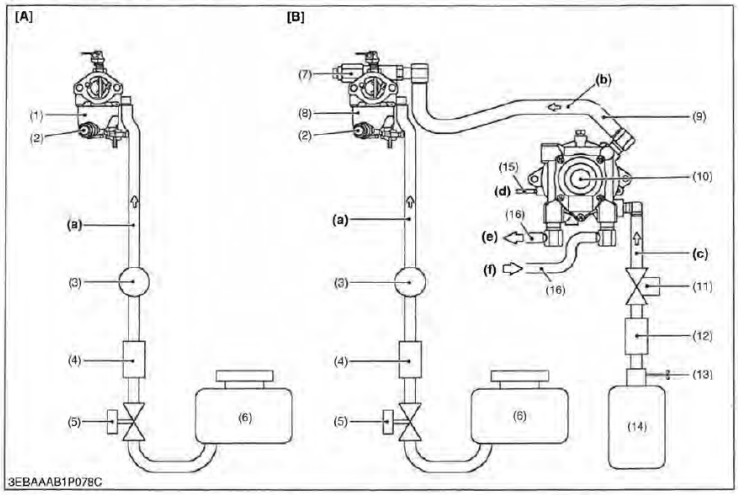 (1) WG Carburetor (2) Gasoline Cut Off Solenoid (3) Fuel Feed Pump (4) Fuel Filter (5) Gasoline Cock* (6) Gasoline Tank* (7) LPG Cut Off Solenoid (8) DF Carburetor (9) Vapor Hose* (10) Vaporizer (11) LPG Shut Off Solenoid Valve* (12) LPG Filter* (13) LPG Manual Valve* (14) LPG Tank* (15) Vacuum Hose* (16) Coolant Hose* (a) Gasoline Line (b) Gaseous Propane Line (c) Liquid Propane Line (d) Vacuum Line (e) Hot Coolant Out Line (f) Hot Coolant In Line [A] WG972-E2 [B] DF972-E2 Component Marked * Is Not Provided by KUBOTA Kubota DF972 Workshop Manual at 65.
(b)(2) a secondary pressure regulator coupled to the primary pressure regulator and configured to regulate the gaseous fuel supplied	Kubota DF972 Workshop Manual teaches a secondary chamber that is coupled to the primary chamber to further decompress the LPG fuel to the vicinity of the atmospheric pressure and deliver LPG through "gaseous propane line b" to operate the generator.

Claim Element	Evidence
from the primary pressure regulator to a desired pressure for delivery through the gaseous fuel line to operate the dual fuel generator; and	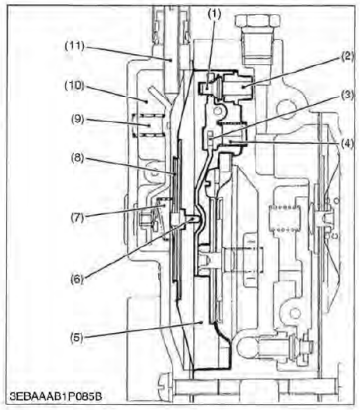 **Secondary Chamber** The fuel adjusted with primary chamber to the specified pressure enters secondary chamber (5) between secondary valve (1) and the valve seat (2) and is decompressed to the vicinity of the atmospheric pressure almost. A secondary valve is assembled to a part of the secondary valve lever (3) supported to body and is shut by the tension of the spring of a secondary valve spring (4). A secondary diaphragm pin (6) touches the edge besides this lever (3). The one side of secondary diaphragm (8) is faced in secondary chamber and the other side faces atmosphere chamber (10). When the engine stops, the atmospheric pressure is led in secondary chamber and a secondary valve is shut by the tension of a secondary valve spring. When the engine rotates, the negative pressure is generated in the venturi tube of the mixer. As for this negative pressure, working secondary diaphragm (8) is pulled to the second chamber side by the difference pressure with atmosphere chamber by second chamber. Kubota DF972 Workshop Manual at 71. WG972-E2,DF972-E2,DG972-E2, WSM ENGINE **4. FUEL SYSTEM** **[1] GENERAL** **(1) WG972-E2, DF972-E2** 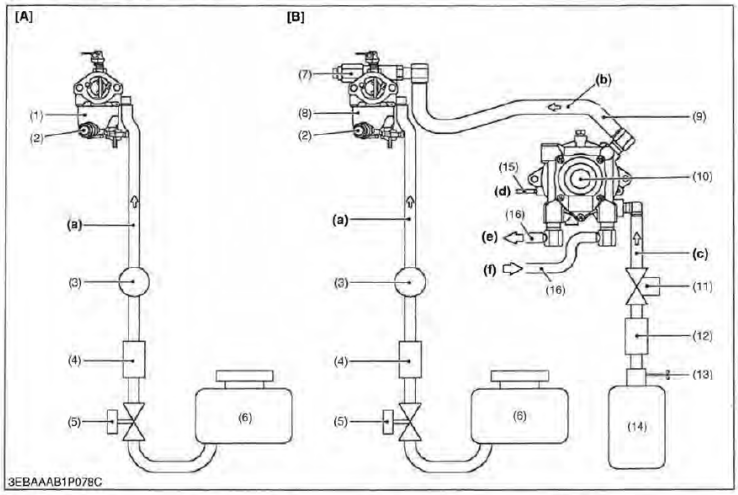 (1) WG Carburetor (2) Gasoline Cut Off Solenoid (3) Fuel Feed Pump (4) Fuel Filter (5) Gasoline Cock* (6) Gasoline Tank* (7) LPG Cut Off Solenoid (8) DF Carburetor (9) Vapor Hose* (10) Vaporizer (11) LPG Shut Off Solenoid Valve* (12) LPG Filter* (13) LPG Manual Valve* (14) LPG Tank* (15) Vacuum Hose* (16) Coolant Hose* (a) Gasoline Line (b) Gaseous Propane Line (c) Liquid Propane Line (d) Vacuum Line (e) Hot Coolant Out Line (f) Hot Coolant In Line [A] WG972-E2 [B] DF972-E2 Component Marked * Is Not Provided by KUBOTA Kubota DF972 Workshop Manual at 65.
(c) a mechanical fuel valve actuatable between a first position and a second position to selectively control fuel flow to the engine from the liquid fuel source through the liquid fuel line and the pressurized fuel source through the gaseous fuel line.	Kubota Workshop Manual discloses a mechanical fuel valve actuatable between a first position and a second position to selectively control fuel flow to the engine from the liquid fuel source through the liquid fuel line and the pressurized fuel source through the gaseous fuel line; *See e.g.*: Kubota Workshop Manual at 65:

Claim Element	Evidence
	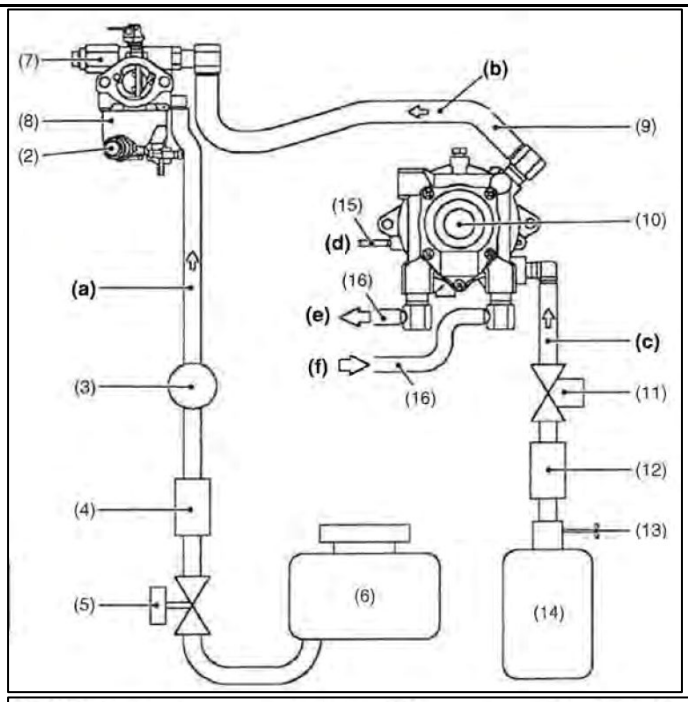 (1) WG Carburetor (2) Gasoline Cut Off Solenoid (3) Fuel Feed Pump (4) Fuel Filter (5) Gasoline Cock* (6) Gasoline Tank* (7) LPG Cut Off Solenoid (8) DF Carburetor (9) Vapor Hose* (10) Vaporizer (11) LPG Shut Off Solenoid Valve* (12) LPG Filter* (13) LPG Manual Valve* (14) LPG Tank* (15) Vacuum Hose* (16) Coolant Hose* **(a) Gasoline Line** **(b) Gaseous Propane Line** **(c) Liquid Propane Line** **(d) Vacuum Line** **(e) Hot Coolant Out Line** **(f) Hot Coolant In Line**
2. The dual fuel generator and fuel delivery system of claim 1 wherein the carburetor connects the gaseous fuel line to the intake.	Kubota DF972 Workshop Manual discloses the dual fuel generator and fuel delivery system of claim 1 wherein the carburetor connects the gaseous fuel line to the intake. *See e.g.*: *See supra* claim 1. Kubota DF972 Workshop Manual at 65:

Claim Element	Evidence
	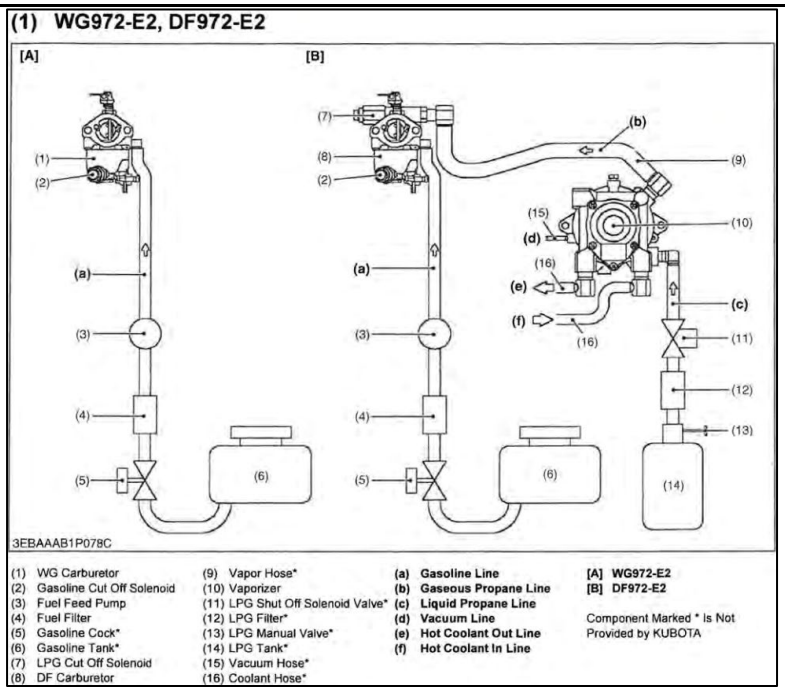 WG972-E2: The fuel is fed from the gasoline tank (6) through the fuel filter (4) to the WG carburetor (1) by the fuel feed pump (3). DF972-E2: This fuel system has 2 ways. Gasoline fuel is the same as WG972-E2. The liquid fuel is evaporated in vaporizer and is sent to the DF carburetor (8) as a gaseous fuel of gas pressure near the atmospheric pressure. The DF carburetor (8) mixes the gas and air is supplied in the cylinder. Kubota DF972 Workshop Manual at 68:

Claim Element	Evidence
	(2) Carburetor (DF972-E2) 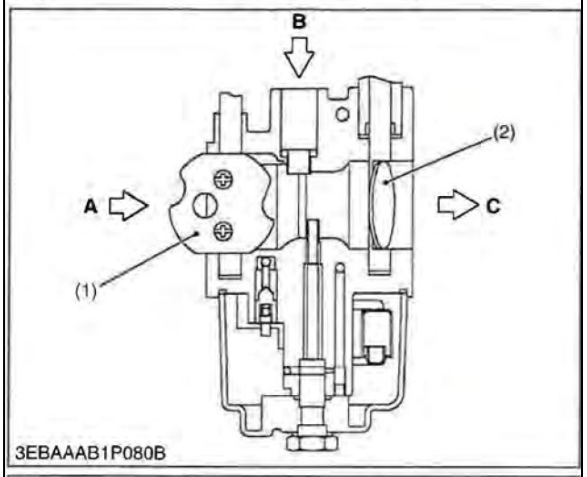 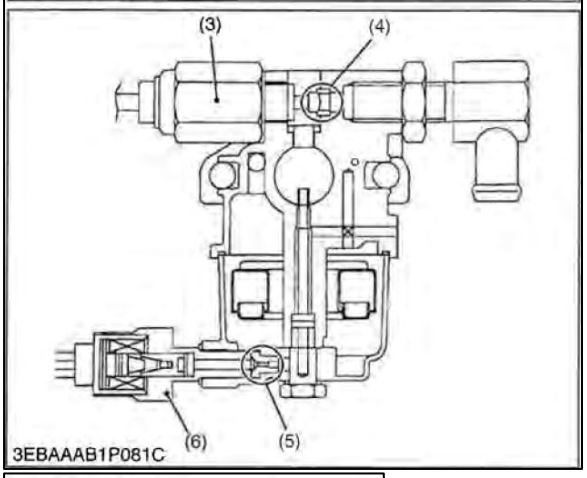 (1) Choke Valve (2) Throttle Valve (3) LPG Cut Off Solenoid (4) LPG Main Jet (5) Gasoline Main Jet (6) Gasoline Cut Off Solenoid (7) Main Switch (8) Fuel Select Switch (9) LPG Shut Off Solenoid Valve The mixer meters both fuel and air, and procedures an air/fuel mixture that has the proper ratio as required by the engine. When the engine starts, the LPG fuel flows out from main jet (4) to venture a constant amount and is mixed with air quantity corresponding to the opening of the throttle valve (1) and is supplied to the cylinder. Kubota DF972 Workshop Manual at 115:

Claim Element	Evidence
	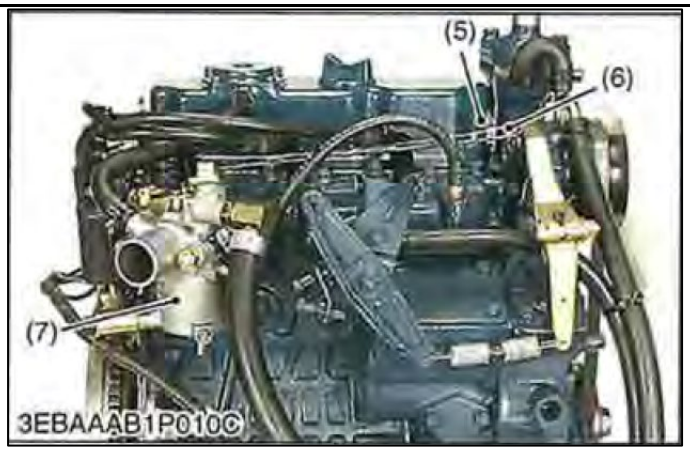 (1) Breather Hose (2) Air Cleaner Flange (3) Gasoline Solenoid Connector (4) LPG Solenoid Connector (5) Governor Rod spring (6) Governor Rod (7) Carburetor 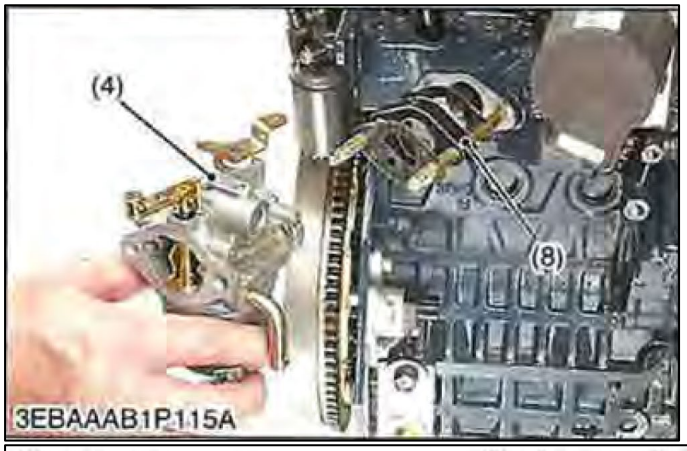 (1) Actuator (2) Air Cleaner Flange (3) Breather Hose (4) Carburetor (5) Governor Rod (6) Governor Rod Spring (7) Governor Lever (8) Carburetor Flange Kubota DF972 Workshop Manual at 119:

Claim Element	Evidence
11. The dual fuel generator and fuel delivery system of claim 1, wherein the primary and secondary pressure regulators are integral components of a dual stage pressure regulator.	Kubota DF972 Workshop Manual teaches a fuel regulator system wherein the primary and secondary pressure regulators are integral components of a dual stage pressure regulator. *See e.g.*, Kubota DF972 Workshop Manual at 65: WG972-E2,DF972-E2,DG972-E2, WSM ENGINE **4. FUEL SYSTEM** **[1] GENERAL** **(1) WG972-E2, DF972-E2** 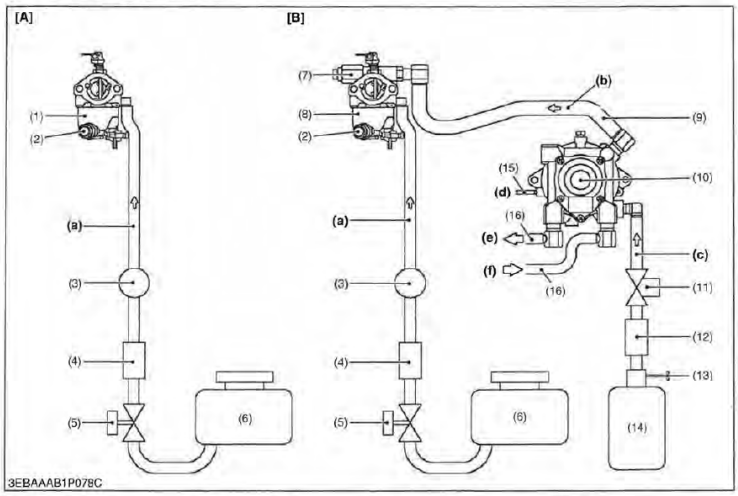 (1) WG Carburetor (2) Gasoline Cut Off Solenoid (3) Fuel Feed Pump (4) Fuel Filter (5) Gasoline Cock* (6) Gasoline Tank* (7) LPG Cut Off Solenoid (8) DF Carburetor (9) Vapor Hose* (10) Vaporizer (11) LPG Shut Off Solenoid Valve* (12) LPG Filter* (13) LPG Manual Valve* (14) LPG Tank* (15) Vacuum Hose* (16) Coolant Hose* (a) Gasoline Line (b) Gaseous Propane Line (c) Liquid Propane Line (d) Vacuum Line (e) Hot Coolant Out Line (f) Hot Coolant In Line [A] WG972-E2 [B] DF972-E2 Component Marked * Is Not Provided by KUBOTA Kubota DF972 Workshop Manual at 10: **[3] LPG REGULATOR WITH VAPORIZER (DF972-E2)** When operating DF972-E2 on LPG, only a KUBOTA GENUINE LPG REGULATOR KIT can be used. 9Y1210318INI0005US0 **[5] LENGTH OF THE LPG VAPOR HOSE (DF972-E2)** The length of the LPG vapor hose between the LPG carburetor and LPG vaporizer must be within 280 to 320 mm (11.1 to 12.5 in.) The incorrect use of the hose may not conform to EPA and CARB EMISSION REGULATIONS. 9Y1210318INI0007US0

Claim Element	Evidence
	Kubota DF972 Workshop Manual at 65. **[3] VAPORIZER (DF972-E2)** 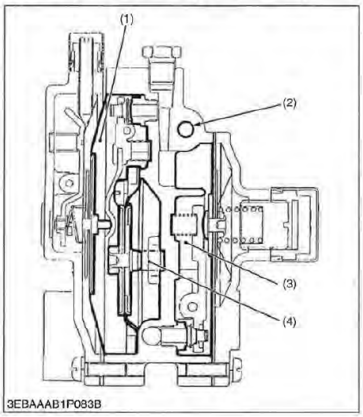 Vaporizer is a device which converts the liquid fuel into the gaseous fuel and the following structures and functions are possessed. ■ **Primary Chamber** The liquid fuel is decompressed (the first decompression) and it is evaporated. ■ **Secondary Chamber** The fuel which flows in is decompressed from the primary chamber to the vicinity of the atmospheric pressure further (the second decompression). ■ **Water Passage** The coolant of the engine is made to circulate as a heat source to evaporate the LPG. ■ **Vacuum Lock Chamber** When the engine stops, the fuel from primary chamber is prevented from flowing out. (1) Secondary Chamber (3) Primary Chamber (2) Water Passage (4) Vacuum Lock Chamber 9Y1210318ENM0033US0 Kubota DF972 Workshop Manual at 69. WG972-E2,DF972-E2,DG972-E2, WSM ENGINE 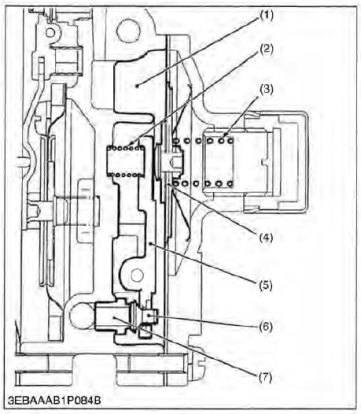 **Primary Chamber** The liquid fuel which pushes the primary valve (6) open passes between the valve and the valve seat (7), enters primary chamber (1), and decompresses and is evaporated. When the inflow of the fuel continues and the primary chamber pressure rises more than the specified pressure 32.7 kPa (0.3 kgf/cm^2, 4.3 psi), the tension in the diaphragm spring (3) is overcome and do the push up of primary diaphragm (4). At this time, do the push up of primary valve lever spring (2) of primary valve lever (5), primary valve (6) is shut, and the inflow of the fuel is intercepted. The tension in the diaphragm spring (3) grows more than the primary chamber pressure when the fuel is consumed and the primary chamber pressure lowers more than a regulated value and a primary diaphragm is depressed below. The primary valve lever (5) is depressed at the same time. A primary valve opens and the fuel flows in again. When the diaphragm tears by any chance and the fuel flows in the primary diaphragm spring side, the primary diaphragm spring side is connected with second chamber in the balance passage so that the fuel should not flow out outside. (1) Primary Chamber (5) Primary Valve Lever (2) Primary Valve Lever Spring (6) Primary Valve (3) Primary Diaphragm Spring (7) Valve Seat (4) Primary Diaphragm 9Y1210318ENM0034US0 Kubota DF972 Workshop Manual at 70.

Claim Element	Evidence
	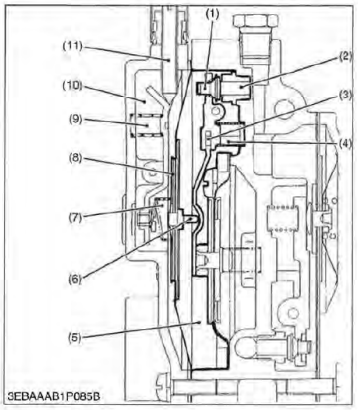 **Secondary Chamber** The fuel adjusted with primary chamber to the specified pressure enters secondary chamber (5) between secondary valve (1) and the valve seat (2) and is decompressed to the vicinity of the atmospheric pressure almost. A secondary valve is assembled to a part of the secondary valve lever (3) supported to body and is shut by the tension of the spring of a secondary valve spring (4). A secondary diaphragm pin (6) touches the edge besides this lever (3). The one side of secondary diaphragm (8) is faced in secondary chamber and the other side faces atmosphere chamber (10). When the engine stops, the atmospheric pressure is led in secondary chamber and a secondary valve is shut by the tension of a secondary valve spring. When the engine rotates, the negative pressure is generated in the venturi tube of the mixer. As for this negative pressure, working secondary diaphragm (8) is pulled to the second chamber side by the difference pressure with atmosphere chamber by second chamber. Kubota DF972 Workshop Manual at 71.
20. (Preamble) A dual fuel generator and fuel delivery system comprising:	To the extent the preamble is limiting, Kubota DF972 Workshop Manual discloses a dual fuel generator and fuel delivery system comprising: *See e.g.*: Kubota DF972 Workshop Manual at 1: Workshop Manual Gasoline, LPG, Natural Gas Engine WG972-E2, DF972-E2, DG972-E2. Kubota DF972 Workshop Manual at 8: **2. SPECIFICATIONS** Model: WG972-E2 / DF972-E2 Number of Cylinder: 3 Type: WG972-E2 — Vertical, water cooled, 4-cycle Gasoline engine; DF972-E2 — Vertical, water cooled, 4-cycle Dual Fuel (Gasoline / LPG) engine (Gasoline fuel / LPG fuel) Kubota DF972 Workshop Manual at 65:

Claim Element	Evidence
	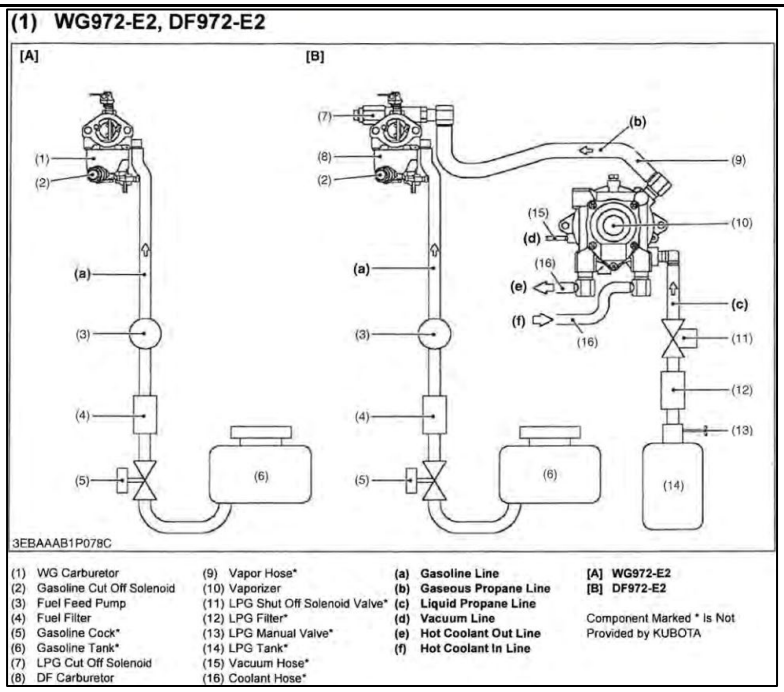 Kubota DF972 Workshop Manual at 77: 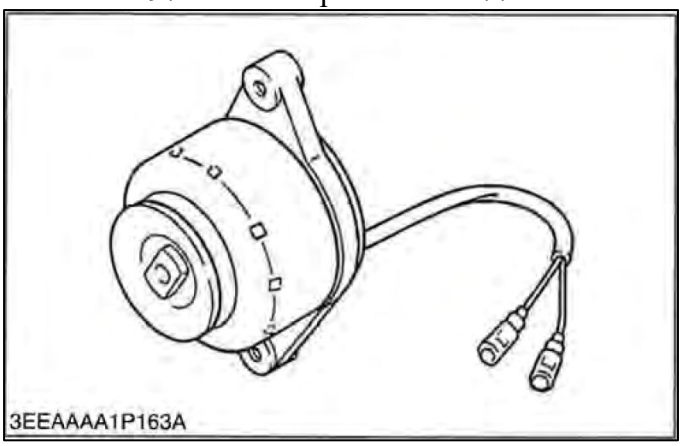 This alternator is an 8-8 pole, rotating magnet type generator. It is simple in construction, consisting of a stator and rotor. The rotor is made up of eight permanent magnet pole pieces assembled on a shaft and rotates on the center of the stator around which eight electromagnetic coils are provided for. This alternator produces higher voltage ln slow speed rotation, and charges electric current to the battery during engine idling.
(a) a dual fuel generator configured to operate on a liquid fuel supplied from a liquid fuel source through a	Kubota DF972 Workshop Manual discloses a dual fuel generator configured to operate on a liquid fuel supplied from a liquid fuel source through a liquid fuel line and a gaseous fuel supplied from

Claim Element	Evidence
liquid fuel line and a gaseous fuel supplied from a pressurized fuel source through a gaseous fuel line, the dual fuel generator comprising:	a pressurized fuel source through a gaseous fuel line, the dual fuel generator comprising: *See e.g.*: Kubota DF972 Workshop Manual at 65: 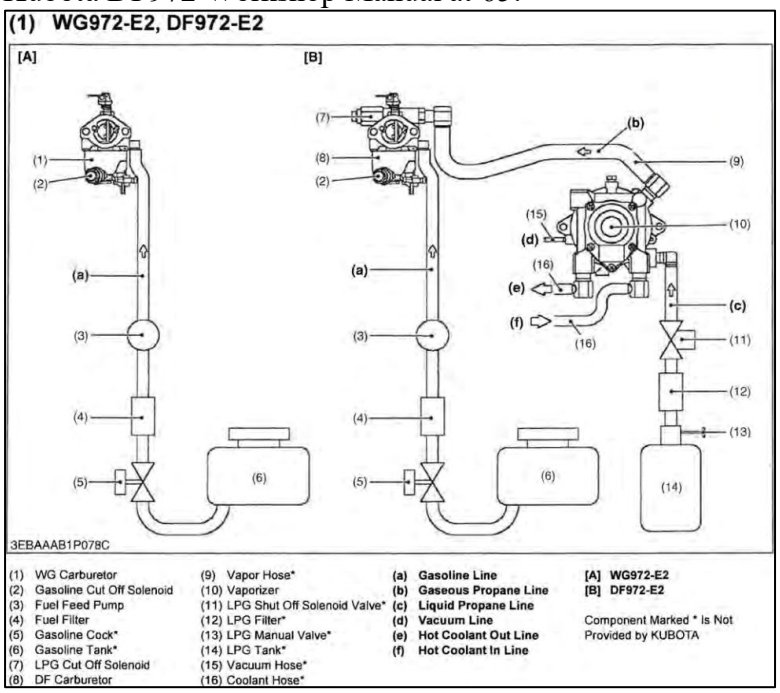 WG972-E2: The fuel is fed from the gasoline tank (6) through the fuel filter (4) to the WG carburetor (1) by the fuel feed pump (3). DF972-E2: This fuel system has 2 ways. Gasoline fuel is the same as WG972-E2. For LPG fuel, the liquid fuel stored in the LPG tank (14) is sent to vaporizer (10) by pressure in the gaseous phase in the tank through the LPG filter (12) and LPG shut off solenoid valve (11). The liquid fuel is evaporated in vaporizer and is sent to the DF carburetor (8) as a gaseous fuel of gas pressure near the atmospheric pressure. The DF carburetor (8) mixes the gas and air is supplied in the cylinder. Kubota DF972 Workshop Manual at 77:

Claim Element	Evidence
	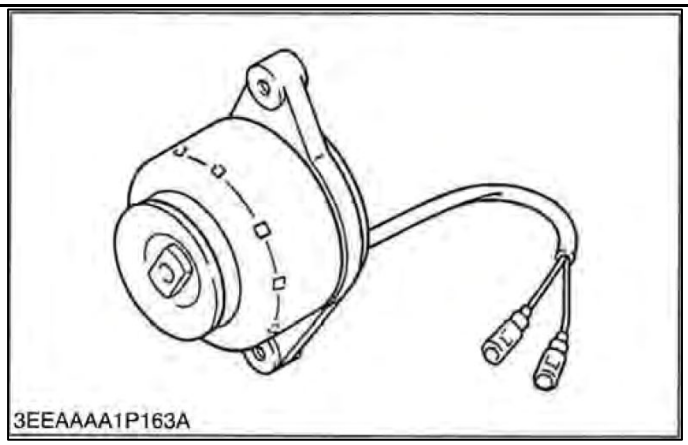 This alternator is an 8-8 pole, rotating magnet type generator. It is simple in construction, consisting of a stator and rotor. The rotor is made up of eight permanent magnet pole pieces assembled on a shaft and rotates on the center of the stator around which eight electromagnetic coils are provided for. This alternator produces higher voltage ln slow speed rotation, and charges electric current to the battery during engine idling. 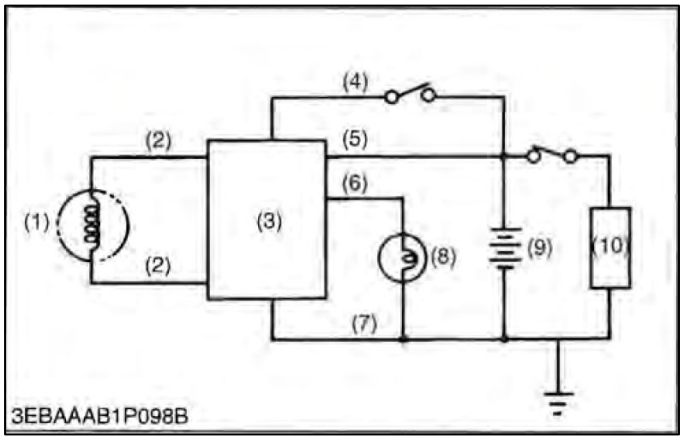 (1) Alternator (2) Blue Lead Wire (3) Regulator (4) Yellow Lead Wire (5) Red Lead Wire (6) Overrunning Clutch (7) Black Lead Wire (8) Charge Lamp (9) Battery (10) Load The regulator performs rectification and voltage regulation. The regulator converts AC into DC which flows through the power consuming circuits and the battery, and also charges the battery. If however, the battery voltage exceeds a certain level. The DC current is cut off from the charging circuit to prevent overcharging.

Claim Element	Evidence
(b) a gaseous fuel valve coupled to an inlet of the gaseous fuel line and connectable to the pressurized fuel source, and	Kubota DF972 Workshop Manual discloses a gaseous fuel valve coupled to an inlet of the gaseous fuel line and connectable to the pressurized fuel source, *See e.g.*: Kubota DF972 Workshop Manual at 65: 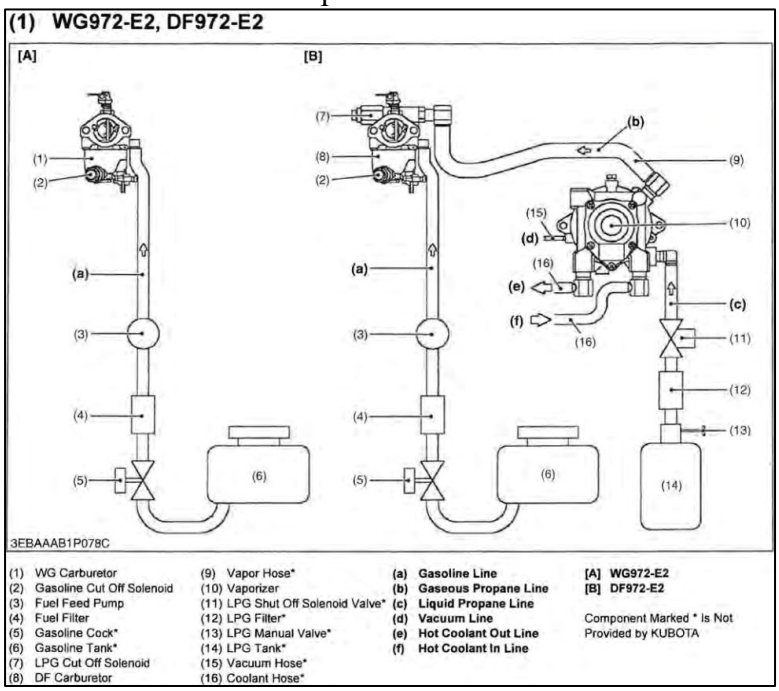 DF972-E2: This fuel system has 2 ways. Gasoline fuel is the same as WG972-E2. For LPG fuel, the liquid fuel stored in the LPG tank (14) is sent to vaporizer (10) by pressure in the gaseous phase in the tank through the LPG filter (12) and LPG shut off solenoid valve (11). The liquid fuel is evaporated in vaporizer and is sent to the DF carburetor (8) as a gaseous fuel of gas pressure near the atmospheric pressure. The DF carburetor (8) mixes the gas and air is supplied in the cylinder. Kubota DF972 Workshop Manual at 68:

Claim Element	Evidence
	(2) Carburetor (DF972-E2) 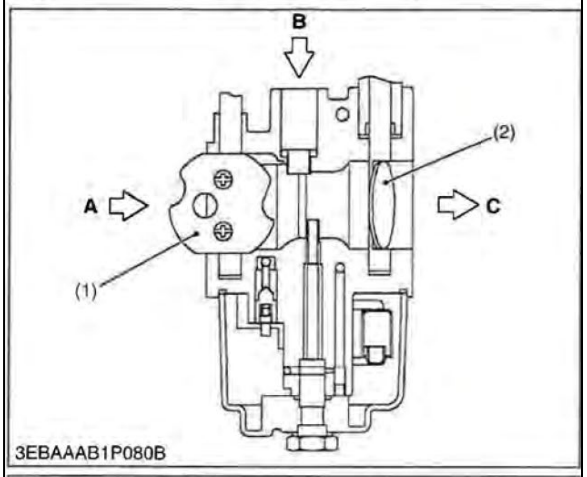 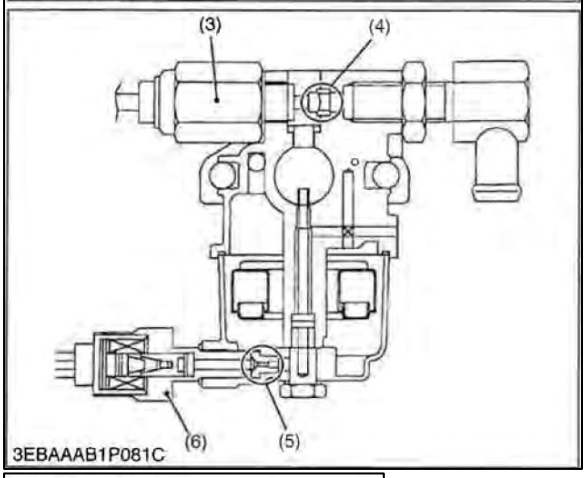 (1) Choke Valve (2) Throttle Valve (3) LPG Cut Off Solenoid (4) LPG Main Jet (5) Gasoline Main Jet (6) Gasoline Cut Off Solenoid (7) Main Switch (8) Fuel Select Switch (9) LPG Shut Off Solenoid Valve When the fuel select switch (8) is turned to the "LPG" position "E", the battery current stops to the gasoline cut off solenoid (6) and flows to the LPG cut off solenoid (3) and LPG shut off solenoid valve (9). Then, the gasoline fuel flow is shut and LPG fuel flows to the mixing chamber.
(c) a mechanical fuel valve actuatable between a first position and a second	Kubota Workshop Manual discloses a mechanical fuel valve actuatable between a first position and a second position to selectively control fuel flow to the engine from the liquid fuel

Claim Element	Evidence
position to selectively control fuel flow to the dual fuel generator from the liquid fuel source through the liquid fuel line and the pressurized fuel source through the gaseous fuel line; and	source through the liquid fuel line and the pressurized fuel source through the gaseous fuel line; *See e.g.*: Kubota Workshop Manual at 65: 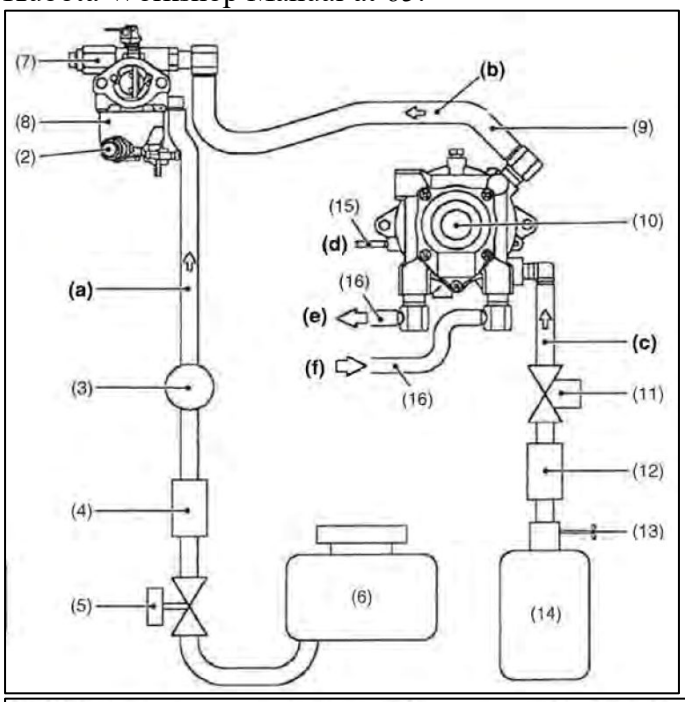 (1) WG Carburetor (2) Gasoline Cut Off Solenoid (3) Fuel Feed Pump (4) Fuel Filter (5) Gasoline Cock* (6) Gasoline Tank* (7) LPG Cut Off Solenoid (8) DF Carburetor (9) Vapor Hose* (10) Vaporizer (11) LPG Shut Off Solenoid Valve* (12) LPG Filter* (13) LPG Manual Valve* (14) LPG Tank* (15) Vacuum Hose* (16) Coolant Hose* **(a) Gasoline Line** **(b) Gaseous Propane Line** **(c) Liquid Propane Line** **(d) Vacuum Line** **(e) Hot Coolant Out Line** **(f) Hot Coolant In Line**
(d) a fuel regulator system located off board the dual fuel generator, the fuel regulator system comprising:	Kubota DF972 Workshop Manual teaches a fuel regulator system located off board the dual fuel generator, including a "vaporizer 10" located off board the generator comprising a primary chamber and a secondary chamber. Kubota DF972 Workshop Manual at 65:

Claim Element	Evidence

WG972-E2,DF972-E2,DG972-E2, WSM — ENGINE

4. FUEL SYSTEM

[1] GENERAL

(1) WG972-E2, DF972-E2

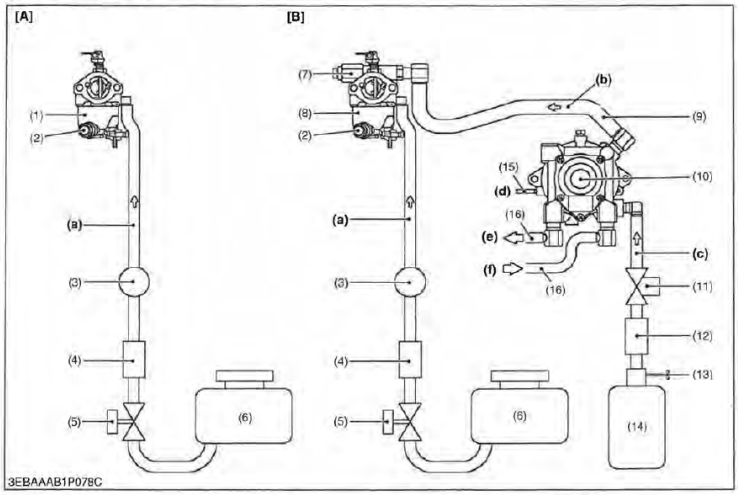

(1) WG Carburetor
(2) Gasoline Cut Off Solenoid
(3) Fuel Feed Pump
(4) Fuel Filter
(5) Gasoline Cock*
(6) Gasoline Tank*
(7) LPG Cut Off Solenoid
(8) DF Carburetor
(9) Vapor Hose*
(10) Vaporizer
(11) LPG Shut Off Solenoid Valve*
(12) LPG Filter*
(13) LPG Manual Valve*
(14) LPG Tank*
(15) Vacuum Hose*
(16) Coolant Hose*

(a) Gasoline Line
(b) Gaseous Propane Line
(c) Liquid Propane Line
(d) Vacuum Line
(e) Hot Coolant Out Line
(f) Hot Coolant In Line

[A] WG972-E2
[B] DF972-E2

Component Marked * Is Not Provided by KUBOTA

Kubota DF972 Workshop Manual at 10:

[3] LPG REGULATOR WITH VAPORIZER (DF972-E2)

When operating DF972-E2 on LPG, only a KUBOTA GENUINE LPG REGULATOR KIT can be used.

9Y1210318INI0005US0

[5] LENGTH OF THE LPG VAPOR HOSE (DF972-E2)

The length of the LPG vapor hose between the LPG carburetor and LPG vaporizer must be within 280 to 320 mm (11.1 to 12.5 in.)

The incorrect use of the hose may not conform to EPA and CARB EMISSION REGULATIONS.

9Y1210318INI0007US0

Kubota DF972 Workshop Manual at 65.

[3] VAPORIZER (DF972-E2)

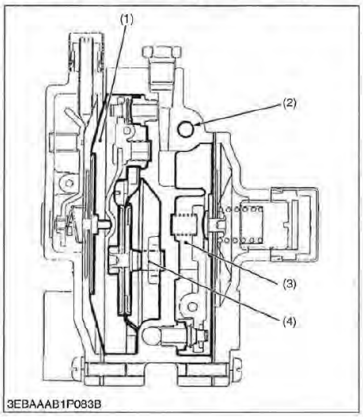

Vaporizer is a device which converts the liquid fuel into the gaseous fuel and the following structures and functions are possessed.

■ **Primary Chamber**

The liquid fuel is decompressed (the first decompression) and it is evaporated.

■ **Secondary Chamber**

The fuel which flows in is decompressed from the primary chamber to the vicinity of the atmospheric pressure further (the second decompression).

■ **Water Passage**

The coolant of the engine is made to circulate as a heat source to evaporate the LPG.

■ **Vacuum Lock Chamber**

When the engine stops, the fuel from primary chamber is prevented from flowing out.

(1) Secondary Chamber
(2) Water Passage
(3) Primary Chamber
(4) Vacuum Lock Chamber

9Y1210318EMM0033US0

Kubota DF972 Workshop Manual at 69.

Claim Element	Evidence

WG972-E2,DF972-E2,DG972-E2, WSM — ENGINE

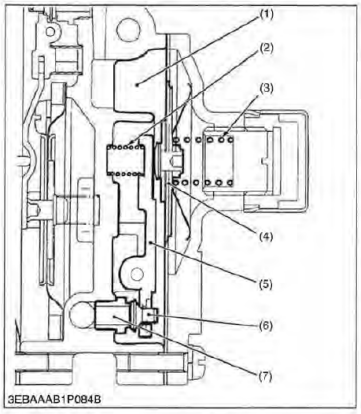

Primary Chamber

The liquid fuel which pushes the primary valve (6) open passes between the valve and the valve seat (7), enters primary chamber (1), and decompresses and is evaporated.

When the inflow of the fuel continues and the primary chamber pressure rises more than the specified pressure 32.7 kPa (0.3 kgf/cm^2, 4.3 psi), the tension in the diaphragm spring (3) is overcome and do the push up of primary diaphragm (4).

At this time, do the push up of primary valve lever spring (2) of primary valve lever (5), primary valve (6) is shut, and the inflow of the fuel is intercepted.

The tension in the diaphragm spring (3) grows more than the primary chamber pressure when the fuel is consumed and the primary chamber pressure lowers more than a regulated value and a primary diaphragm is depressed below.

The primary valve lever (5) is depressed at the same time.

A primary valve opens and the fuel flows in again.

When the diaphragm tears by any chance and the fuel flows in the primary diaphragm spring side, the primary diaphragm spring side is connected with second chamber in the balance passage so that the fuel should not flow out outside.

(1) Primary Chamber
(2) Primary Valve Lever Spring
(3) Primary Diaphragm Spring
(4) Primary Diaphragm
(5) Primary Valve Lever
(6) Primary Valve
(7) Valve Seat

9Y1210318ENM00340S0

Kubota DF972 Workshop Manual at 70.

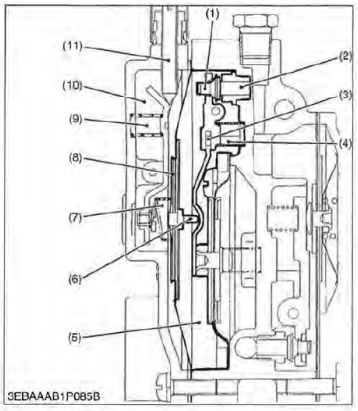

Secondary Chamber

The fuel adjusted with primary chamber to the specified pressure enters secondary chamber (5) between secondary valve (1) and the valve seat (2) and is decompressed to the vicinity of the atmospheric pressure almost.

A secondary valve is assembled to a part of the secondary valve lever (3) supported to body and is shut by the tension of the spring of a secondary valve spring (4).

A secondary diaphragm pin (6) touches the edge besides this lever (3).

The one side of secondary diaphragm (8) is faced in secondary chamber and the other side faces atmosphere chamber (10).

When the engine stops, the atmospheric pressure is led in secondary chamber and a secondary valve is shut by the tension of a secondary valve spring.

When the engine rotates, the negative pressure is generated in the venturi tube of the mixer.

As for this negative pressure, working secondary diaphragm (8) is pulled to the second chamber side by the difference pressure with atmosphere chamber by second chamber.

Kubota DF972 Workshop Manual at 71.

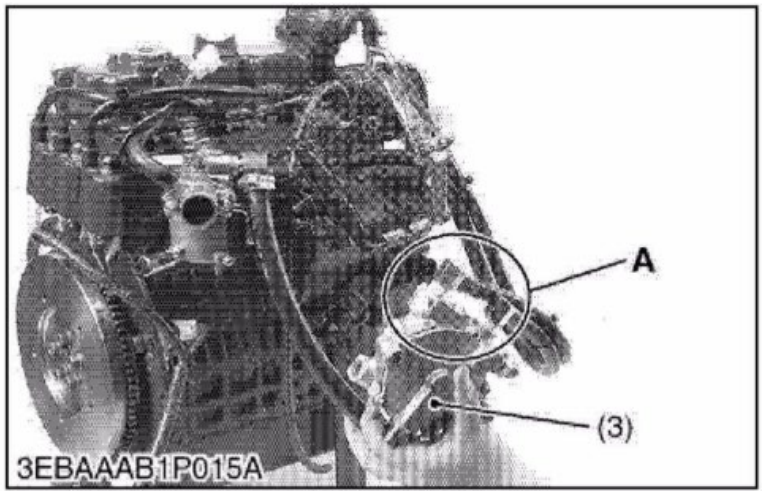

Kubota DF972 Workshop Manual at 106.

Claim Element	Evidence
	The fuel regulator system is not mounted to the generator, it is therefore located off board (*i.e.* remotely).
(d)(1) a primary pressure regulator connectable to a service valve of the pressurized fuel source and configured to regulate the fuel supplied from the pressurized fuel source to a reduced pressure, and	Kubota DF972 Workshop Manual teaches a primary chamber that decompress and evaporate liquid LPG fuel supplied from "LPG tank 14" in the first stage. WG972-E2,DF972-E2,DG972-E2, WSM ENGINE 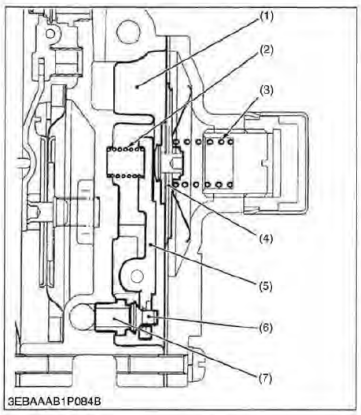 **Primary Chamber** The liquid fuel which pushes the primary valve (6) open passes between the valve and the valve seat (7), enters primary chamber (1), and decompresses and is evaporated. When the inflow of the fuel continues and the primary chamber pressure rises more than the specified pressure 32.7 kPa (0.3 kgf/cm^2, 4.3 psi), the tension in the diaphragm spring (3) is overcome and do the push up of primary diaphragm (4). At this time, do the push up of primary valve lever spring (2) of primary valve lever (5), primary valve (6) is shut, and the inflow of the fuel is intercepted. The tension in the diaphragm spring (3) grows more than the primary chamber pressure when the fuel is consumed and the primary chamber pressure lowers more than a regulated value and a primary diaphragm is depressed below. The primary valve lever (5) is depressed at the same time. A primary valve opens and the fuel flows in again. When the diaphragm tears by any chance and the fuel flows in the primary diaphragm spring side, the primary diaphragm spring side is connected with second chamber in the balance passage so that the fuel should not flow out outside. (1) Primary Chamber (5) Primary Valve Lever (2) Primary Valve Lever Spring (6) Primary Valve (3) Primary Diaphragm Spring (7) Valve Seat (4) Primary Diaphragm 9Y1210318ENM00340S0 Kubota DF972 Workshop Manual at 70. WG972-E2,DF972-E2,DG972-E2, WSM ENGINE **4. FUEL SYSTEM** **[1] GENERAL** **(1) WG972-E2, DF972-E2** 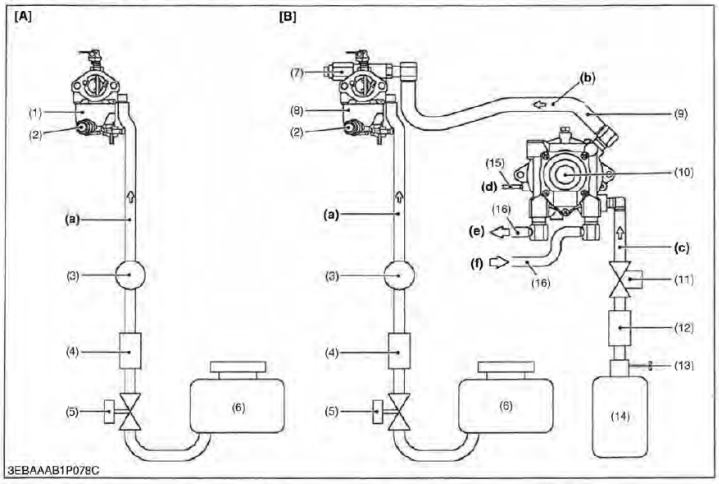 (1) WG Carburetor (9) Vapor Hose* (a) Gasoline Line [A] WG972-E2 (2) Gasoline Cut Off Solenoid (10) Vaporizer (b) Gaseous Propane Line [B] DF972-E2 (3) Fuel Feed Pump (11) LPG Shut Off Solenoid Valve* (c) Liquid Propane Line (4) Fuel Filter (12) LPG Filter* (d) Vacuum Line Component Marked * Is Not Provided by KUBOTA (5) Gasoline Cock* (13) LPG Manual Valve* (e) Hot Coolant Out Line (6) Gasoline Tank* (14) LPG Tank* (f) Hot Coolant In Line (7) LPG Cut Off Solenoid (15) Vacuum Hose* (8) DF Carburetor (16) Coolant Hose* Kubota DF972 Workshop Manual at 65.

Claim Element	Evidence
(d)(2) a secondary pressure regulator coupled to the primary pressure regulator and connectable to the gaseous fuel valve, the secondary pressure regulator configured to regulate the gaseous fuel supplied from the primary pressure regulator to a desired pressure for delivery through the gaseous fuel line to operate the dual fuel generator.	Kubota DF972 Workshop Manual teaches a secondary chamber that is coupled to the primary chamber to further decompress the LPG fuel to the vicinity of the atmospheric pressure and deliver LPG through "gaseous propane line b" to operate the generator. 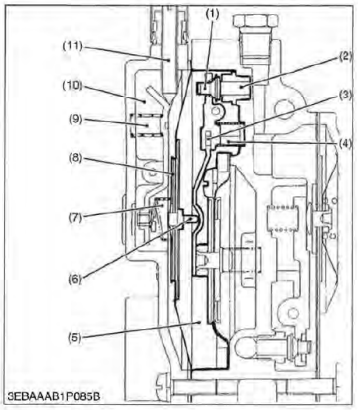 **Secondary Chamber** The fuel adjusted with primary chamber to the specified pressure enters secondary chamber (5) between secondary valve (1) and the valve seat (2) and is decompressed to the vicinity of the atmospheric pressure almost. A secondary valve is assembled to a part of the secondary valve lever (3) supported to body and is shut by the tension of the spring of a secondary valve spring (4). A secondary diaphragm pin (6) touches the edge besides this lever (3). The one side of secondary diaphragm (8) is faced in secondary chamber and the other side faces atmosphere chamber (10). When the engine stops, the atmospheric pressure is led in secondary chamber and a secondary valve is shut by the tension of a secondary valve spring. When the engine rotates, the negative pressure is generated in the venturi tube of the mixer. As for this negative pressure, working secondary diaphragm (8) is pulled to the second chamber side by the difference pressure with atmosphere chamber by second chamber. Kubota DF972 Workshop Manual at 71. 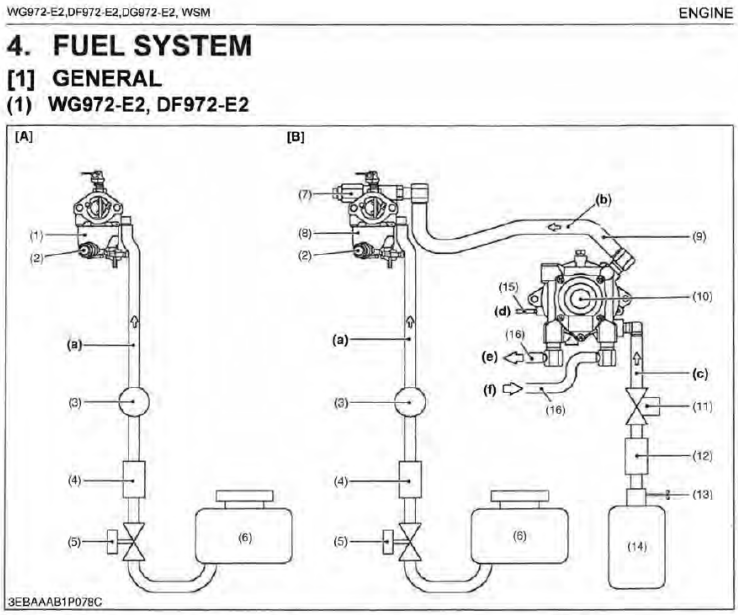 Kubota DF972 Workshop Manual at 65.
21. The dual fuel generator and fuel delivery system of claim 20 wherein the pressurized fuel source is independent and	Kubota DF972 Workshop Manual discloses the dual fuel generator and fuel delivery system of claim 20 wherein the pressurized fuel source is independent and disconnected from the dual fuel generator. *See e.g.*:

Claim Element	Evidence
disconnected from the dual fuel generator.	*See supra* Claim 20. Kubota DF972 Workshop Manual at 65: 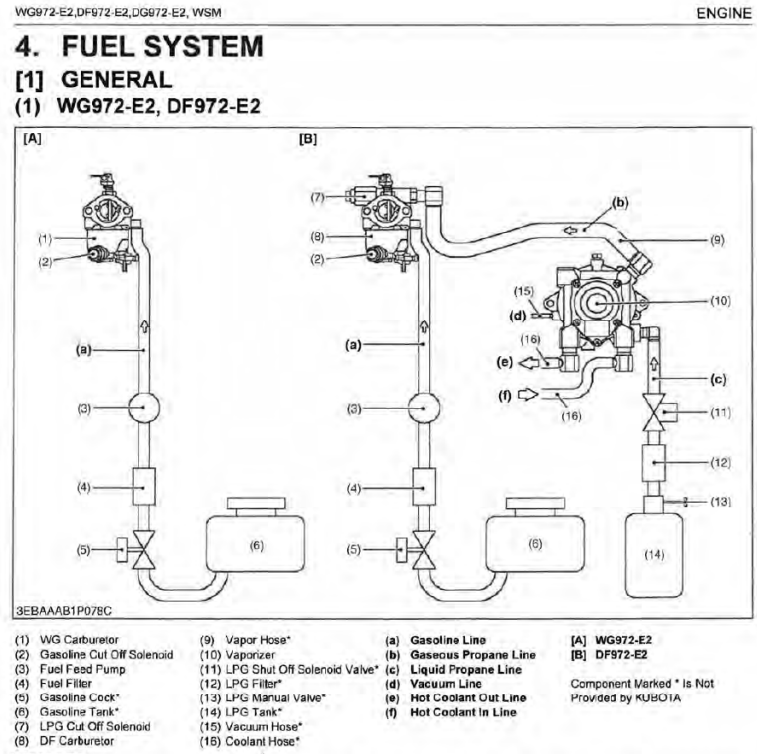 WG972-E2,DF972-E2,DG972-E2, WSM ENGINE **4. FUEL SYSTEM** **[1] GENERAL** **(1) WG972-E2, DF972-E2** 3EBAAAB1P078C (1) WG Carburetor (2) Gasoline Cut Off Solenoid (3) Fuel Feed Pump (4) Fuel Filter (5) Gasoline Cock* (6) Gasoline Tank* (7) LPG Cut Off Solenoid (8) DF Carburetor (9) Vapor Hose* (10) Vaporizer (11) LPG Shut Off Solenoid Valve* (12) LPG Filter* (13) LPG Manual Valve* (14) LPG Tank* (15) Vacuum Hose* (16) Coolant Hose* (a) Gasoline Line (b) Gaseous Propane Line (c) Liquid Propane Line (d) Vacuum Line (e) Hot Coolant Out Line (f) Hot Coolant In Line [A] WG972-E2 [B] DF972-E2 Component Marked * Is Not Provided by KUBOTA Kubota DF972 Workshop Manual at 10: **[3] LPG REGULATOR WITH VAPORIZER (DF972-E2)** When operating DF972-E2 on LPG, only a KUBOTA GENUINE LPG REGULATOR KIT can be used. 9Y1210318INI0005US0 **[5] LENGTH OF THE LPG VAPOR HOSE (DF972-E2)** The length of the LPG vapor hose between the LPG carburetor and LPG vaporizer must be within 280 to 320 mm (11.1 to 12.5 in.) The incorrect use of the hose may not conform to EPA and CARB EMISSION REGULATIONS. 9Y1210318INI0007US0 Kubota DF972 Workshop Manual at 65.

Claim Element	Evidence
	[3] VAPORIZER (DF972-E2) 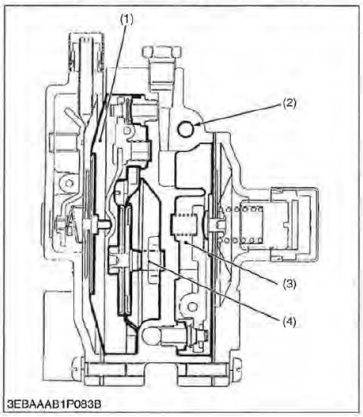 Vaporizer is a device which converts the liquid fuel into the gaseous fuel and the following structures and functions are possessed. ■ **Primary Chamber** The liquid fuel is decompressed (the first decompression) and it is evaporated. ■ **Secondary Chamber** The fuel which flows in is decompressed from the primary chamber to the vicinity of the atmospheric pressure further (the second decompression). ■ **Water Passage** The coolant of the engine is made to circulate as a heat source to evaporate the LPG. ■ **Vacuum Lock Chamber** When the engine stops, the fuel from primary chamber is prevented from flowing out. (1) Secondary Chamber (3) Primary Chamber (2) Water Passage (4) Vacuum Lock Chamber 9Y1210318EMN0033US0 Kubota DF972 Workshop Manual at 69. 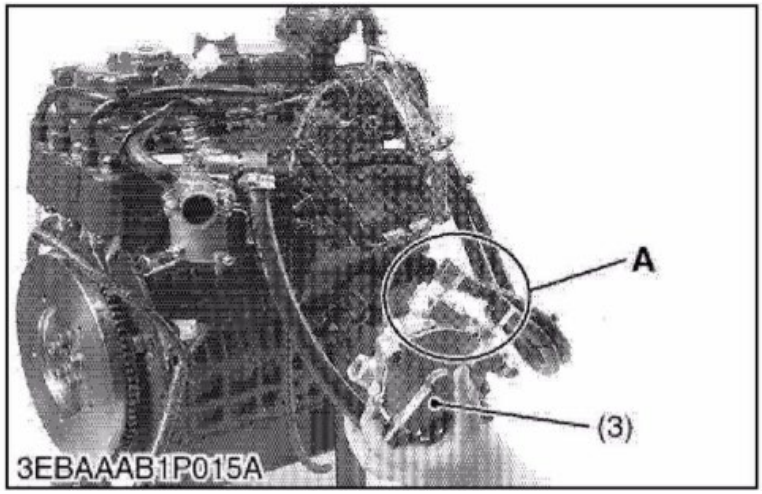 Kubota DF972 Workshop Manual at 106.
22. The dual fuel generator and fuel delivery system of claim 21 wherein the fuel regulator system is disconnected from the dual fuel generator.	Kubota DF972 Workshop Manual discloses the fuel regulator system is disconnected from the dual fuel generator: *See e.g.*: *See supra* Claim 21. Kubota DF972 Workshop Manual at 10: **[3] LPG REGULATOR WITH VAPORIZER (DF972-E2)** When operating DF972-E2 on LPG, only a KUBOTA GENUINE LPG REGULATOR KIT can be used. 9Y1210318INI0005US0
23. The dual fuel generator and fuel delivery system of claim 21 wherein the primary pressure regulator is disconnected from the pressurized fuel source.	Kubota DF972 Workshop Manual discloses the fuel regulator system is disconnected from the dual fuel generator: *See e.g.*: Kubota DF972 Workshop Manual at 10: **[3] LPG REGULATOR WITH VAPORIZER (DF972-E2)** When operating DF972-E2 on LPG, only a KUBOTA GENUINE LPG REGULATOR KIT can be used. 9Y1210318INI0005US0

Claim Element	Evidence
	Kubota DF972 Workshop Manual at 65:

WG972-E2,DF972-E2,DG972-E2, WSM — ENGINE

4. FUEL SYSTEM

[1] GENERAL

(1) WG972-E2, DF972-E2

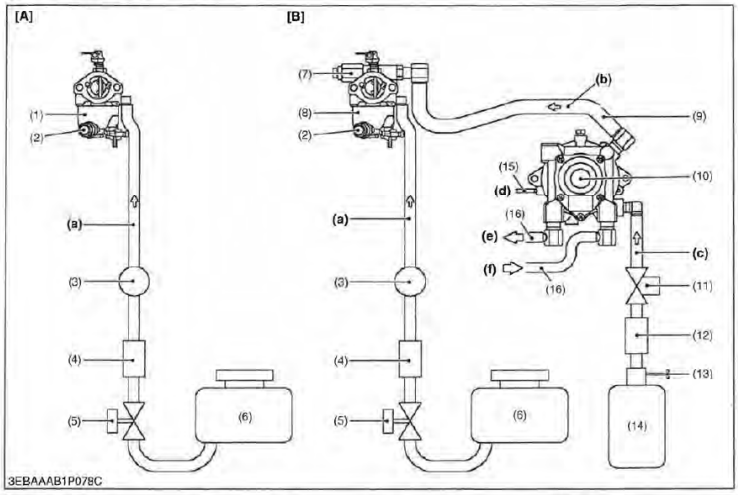

(1) WG Carburetor
(2) Gasoline Cut Off Solenoid
(3) Fuel Feed Pump
(4) Fuel Filter
(5) Gasoline Cock*
(6) Gasoline Tank*
(7) LPG Cut Off Solenoid
(8) DF Carburetor
(9) Vapor Hose*
(10) Vaporizer
(11) LPG Shut Off Solenoid Valve*
(12) LPG Filter*
(13) LPG Manual Valve*
(14) LPG Tank*
(15) Vacuum Hose*
(16) Coolant Hose*

(a) **Gasoline Line**
(b) **Gaseous Propane Line**
(c) **Liquid Propane Line**
(d) **Vacuum Line**
(e) **Hot Coolant Out Line**
(f) **Hot Coolant In Line**

[A] **WG972-E2**
[B] **DF972-E2**

Component Marked * Is Not Provided by KUBOTA

Kubota DF972 Workshop Manual at 10:

[3] LPG REGULATOR WITH VAPORIZER (DF972-E2)

When operating DF972-E2 on LPG, only a KUBOTA GENUINE LPG REGULATOR KIT can be used.

9Y1210318INI0005US0

[5] LENGTH OF THE LPG VAPOR HOSE (DF972-E2)

The length of the LPG vapor hose between the LPG carburetor and LPG vaporizer must be within 280 to 320 mm (11.1 to 12.5 in.)

The incorrect use of the hose may not conform to EPA and CARB EMISSION REGULATIONS.

9Y1210318INI0007US0

Kubota DF972 Workshop Manual at 65.

[3] VAPORIZER (DF972-E2)

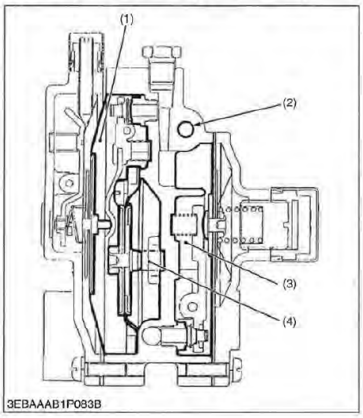

Vaporizer is a device which converts the liquid fuel into the gaseous fuel and the following structures and functions are possessed.

■ **Primary Chamber**
The liquid fuel is decompressed (the first decompression) and it is evaporated.

■ **Secondary Chamber**
The fuel which flows in is decompressed from the primary chamber to the vicinity of the atmospheric pressure further (the second decompression).

■ **Water Passage**
The coolant of the engine is made to circulate as a heat source to evaporate the LPG.

■ **Vacuum Lock Chamber**
When the engine stops, the fuel from primary chamber is prevented from flowing out.

(1) Secondary Chamber
(2) Water Passage
(3) Primary Chamber
(4) Vacuum Lock Chamber

9Y1210318EMN0033US0

Kubota DF972 Workshop Manual at 69.

Claim Element	Evidence

WG972-E2,DF972-E2,DG972-E2, WSM — ENGINE

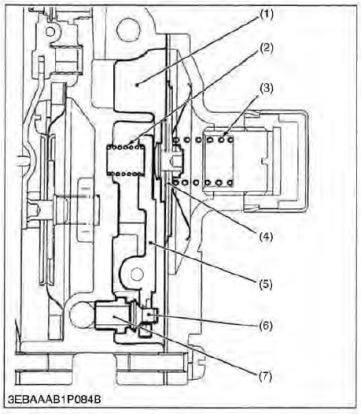

Primary Chamber

The liquid fuel which pushes the primary valve (6) open passes between the valve and the valve seat (7), enters primary chamber (1), and decompresses and is evaporated.

When the inflow of the fuel continues and the primary chamber pressure rises more than the specified pressure 32.7 kPa (0.3 kgf/cm^2, 4.3 psi), the tension in the diaphragm spring (3) is overcome and do the push up of primary diaphragm (4).

At this time, do the push up of primary valve lever spring (2) of primary valve lever (5), primary valve (6) is shut, and the inflow of the fuel is intercepted.

The tension in the diaphragm spring (3) grows more than the primary chamber pressure when the fuel is consumed and the primary chamber pressure lowers more than a regulated value and a primary diaphragm is depressed below.

The primary valve lever (5) is depressed at the same time.

A primary valve opens and the fuel flows in again.

When the diaphragm tears by any chance and the fuel flows in the primary diaphragm spring side, the primary diaphragm spring side is connected with second chamber in the balance passage so that the fuel should not flow out outside.

(1) Primary Chamber
(2) Primary Valve Lever Spring
(3) Primary Diaphragm Spring
(4) Primary Diaphragm
(5) Primary Valve Lever
(6) Primary Valve
(7) Valve Seat

9Y1210318ENM00340S0

Kubota DF972 Workshop Manual at 70.

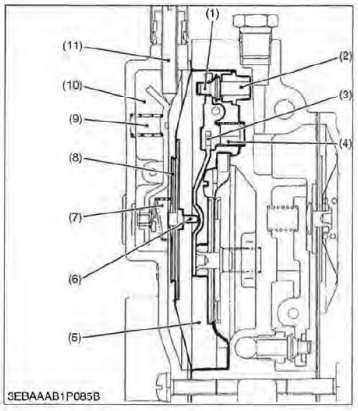

Secondary Chamber

The fuel adjusted with primary chamber to the specified pressure enters secondary chamber (5) between secondary valve (1) and the valve seat (2) and is decompressed to the vicinity of the atmospheric pressure almost.

A secondary valve is assembled to a part of the secondary valve lever (3) supported to body and is shut by the tension of the spring of a secondary valve spring (4).

A secondary diaphragm pin (6) touches the edge besides this lever (3).

The one side of secondary diaphragm (8) is faced in secondary chamber and the other side faces atmosphere chamber (10).

When the engine stops, the atmospheric pressure is led in secondary chamber and a secondary valve is shut by the tension of a secondary valve spring.

When the engine rotates, the negative pressure is generated in the venturi tube of the mixer.

As for this negative pressure, working secondary diaphragm (8) is pulled to the second chamber side by the difference pressure with atmosphere chamber by second chamber.

Kubota DF972 Workshop Manual at 71.

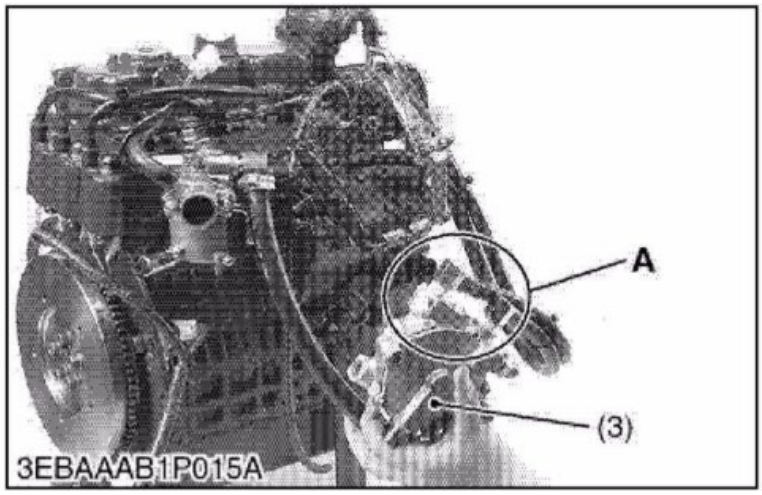

Kubota DF972 Workshop Manual at 106.

Claim Element	Evidence
33. The dual fuel generator and fuel delivery system of claim 20, wherein the primary and secondary pressure regulators are integral components of a dual stage pressure regulator.	Kubota DF972 Workshop Manual teaches a fuel regulator system wherein the primary and secondary pressure regulators are integral components of a dual stage pressure regulator. *See e.g.*, Kubota DF972 Workshop Manual at 65: 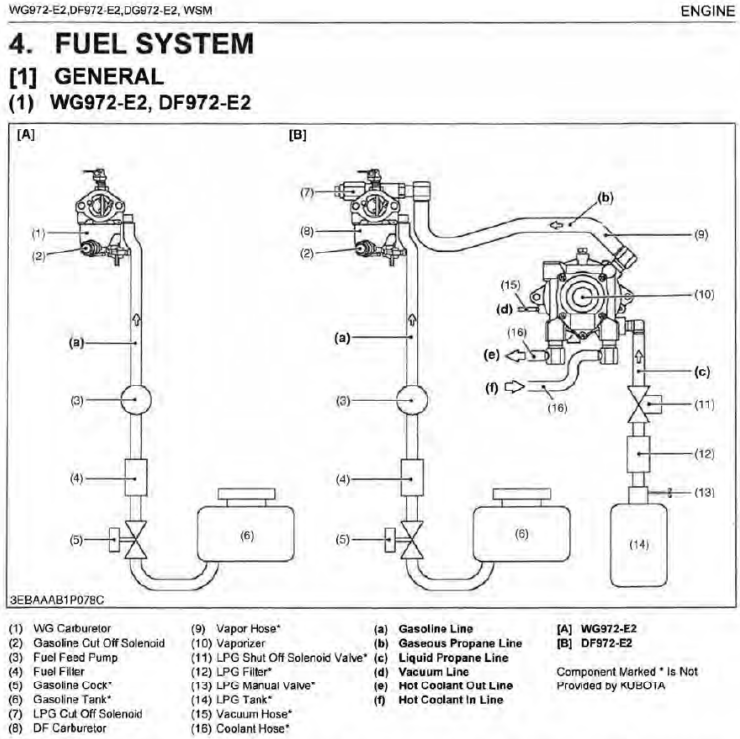 WG972-E2,DF972-E2,DG972-E2, WSM ENGINE **4. FUEL SYSTEM** **[1] GENERAL** **(1) WG972-E2, DF972-E2** [A] [B] 3EBAAAB1P078C (1) WG Carburetor (2) Gasoline Cut Off Solenoid (3) Fuel Feed Pump (4) Fuel Filter (5) Gasoline Cock* (6) Gasoline Tank* (7) LPG Cut Off Solenoid (8) DF Carburetor (9) Vapor Hose* (10) Vaporizer (11) LPG Shut Off Solenoid Valve* (12) LPG Filter* (13) LPG Manual Valve* (14) LPG Tank* (15) Vacuum Hose* (16) Coolant Hose* (a) Gasoline Line (b) Gaseous Propane Line (c) Liquid Propane Line (d) Vacuum Line (e) Hot Coolant Out Line (f) Hot Coolant In Line [A] WG972-E2 [B] DF972-E2 Component Marked * Is Not Provided by KUBOTA Kubota DF972 Workshop Manual at 10: **[3] LPG REGULATOR WITH VAPORIZER (DF972-E2)** When operating DF972-E2 on LPG, only a KUBOTA GENUINE LPG REGULATOR KIT can be used. 9Y1210318INI0005US0 **[5] LENGTH OF THE LPG VAPOR HOSE (DF972-E2)** The length of the LPG vapor hose between the LPG carburetor and LPG vaporizer must be within 280 to 320 mm (11.1 to 12.5 in.) The incorrect use of the hose may not conform to EPA and CARB EMISSION REGULATIONS. 9Y1210318INI0007US0 Kubota DF972 Workshop Manual at 65.

Claim Element	Evidence
	[3] VAPORIZER (DF972-E2) 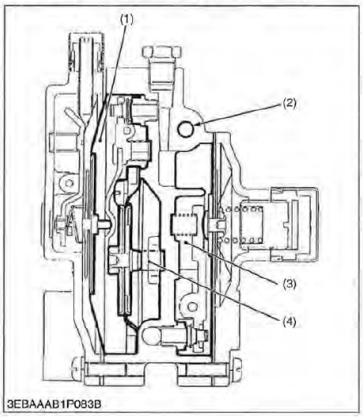 Vaporizer is a device which converts the liquid fuel into the gaseous fuel and the following structures and functions are possessed. ■ **Primary Chamber** The liquid fuel is decompressed (the first decompression) and it is evaporated. ■ **Secondary Chamber** The fuel which flows in is decompressed from the primary chamber to the vicinity of the atmospheric pressure further (the second decompression). ■ **Water Passage** The coolant of the engine is made to circulate as a heat source to evaporate the LPG. ■ **Vacuum Lock Chamber** When the engine stops, the fuel from primary chamber is prevented from flowing out. (1) Secondary Chamber (3) Primary Chamber (2) Water Passage (4) Vacuum Lock Chamber 9Y1210318ENM0033US0 Kubota DF972 Workshop Manual at 69. WG972-E2,DF972-E2,DG972-E2, WSM ENGINE 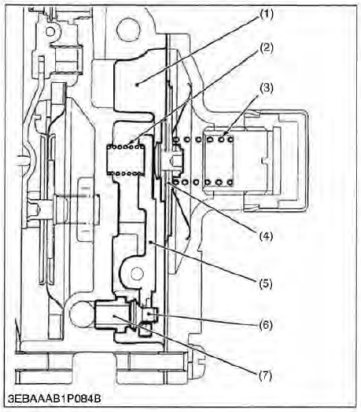 **Primary Chamber** The liquid fuel which pushes the primary valve (6) open passes between the valve and the valve seat (7), enters primary chamber (1), and decompresses and is evaporated. When the inflow of the fuel continues and the primary chamber pressure rises more than the specified pressure 32.7 kPa (0.3 kgf/cm^2, 4.3 psi), the tension in the diaphragm spring (3) is overcome and do the push up of primary diaphragm (4). At this time, do the push up of primary valve lever spring (2) of primary valve lever (5), primary valve (6) is shut, and the inflow of the fuel is intercepted. The tension in the diaphragm spring (3) grows more than the primary chamber pressure when the fuel is consumed and the primary chamber pressure lowers more than a regulated value and a primary diaphragm is depressed below. The primary valve lever (5) is depressed at the same time. A primary valve opens and the fuel flows in again. When the diaphragm tears by any chance and the fuel flows in the primary diaphragm spring side, the primary diaphragm spring side is connected with second chamber in the balance passage so that the fuel should not flow out outside. (1) Primary Chamber (5) Primary Valve Lever (2) Primary Valve Lever Spring (6) Primary Valve (3) Primary Diaphragm Spring (7) Valve Seat (4) Primary Diaphragm 9Y1210318ENM0034US0 Kubota DF972 Workshop Manual at 70. 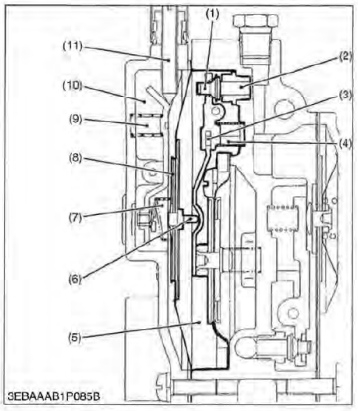 **Secondary Chamber** The fuel adjusted with primary chamber to the specified pressure enters secondary chamber (5) between secondary valve (1) and the valve seat (2) and is decompressed to the vicinity of the atmospheric pressure almost. A secondary valve is assembled to a part of the secondary valve lever (3) supported to body and is shut by the tension of the spring of a secondary valve spring (4). A secondary diaphragm pin (6) touches the edge besides this lever (3). The one side of secondary diaphragm (8) is faced in secondary chamber and the other side faces atmosphere chamber (10). When the engine stops, the atmospheric pressure is led in secondary chamber and a secondary valve is shut by the tension of a secondary valve spring. When the engine rotates, the negative pressure is generated in the venturi tube of the mixer. As for this negative pressure, working secondary diaphragm (8) is pulled to the second chamber side by the difference pressure with atmosphere chamber by second chamber. Kubota DF972 Workshop Manual at 71.