Sept. 9, 1969 J. R. HARKNESS ET AL 3,465,740

PULL ROPE TYPE STARTER FOR VERTICAL SHAFT ENGINES

Filed Feb. 13, 1968 5 Sheets-Sheet 1

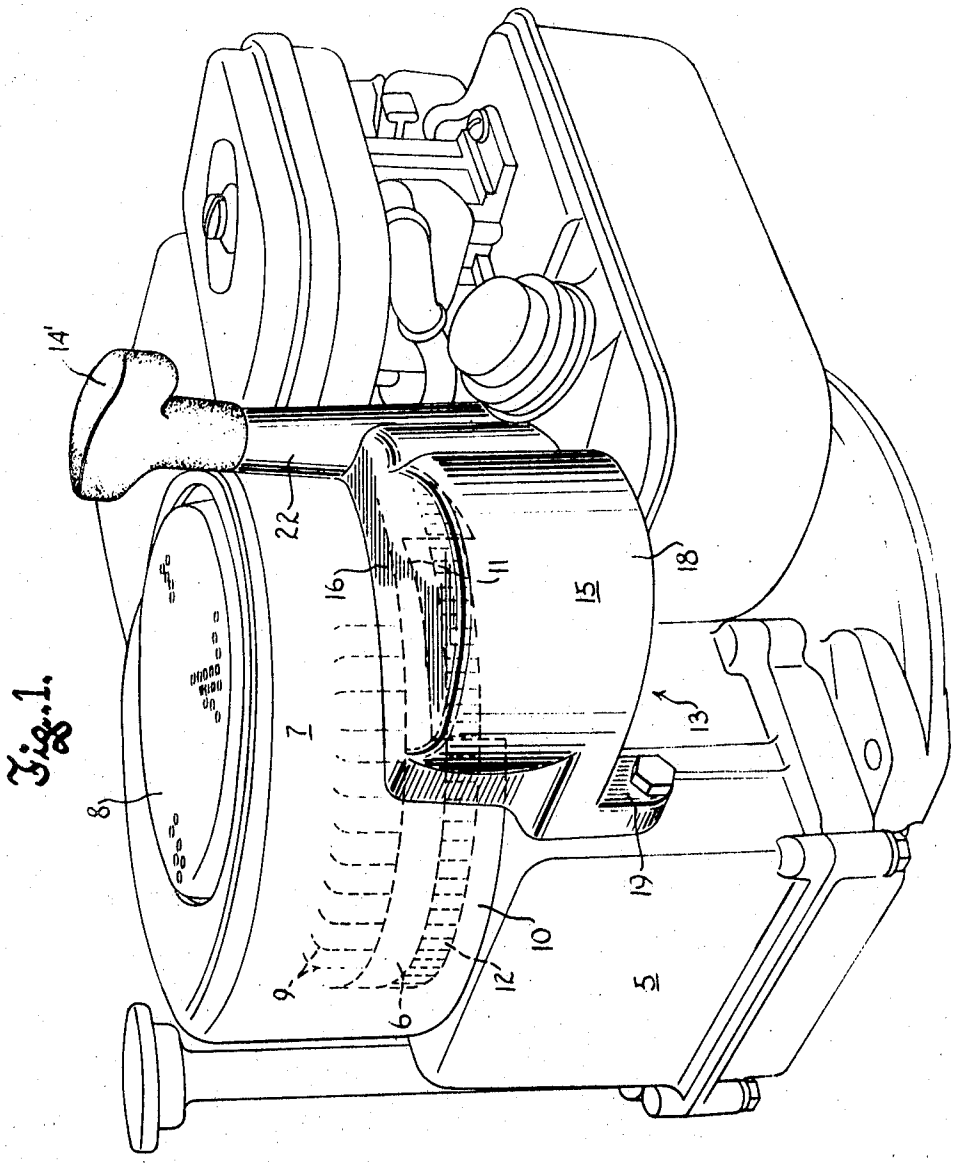

Fig. 1.

Inventors
Joseph R. Harkness
Leo J. Lechtenberg
By Ira Milton Jones
A. Harney

PULL ROPE TYPE STARTER FOR VERTICAL SHAFT ENGINES

Filed Feb. 13, 1968 5 Sheets-Sheet 2

Fig. 2.

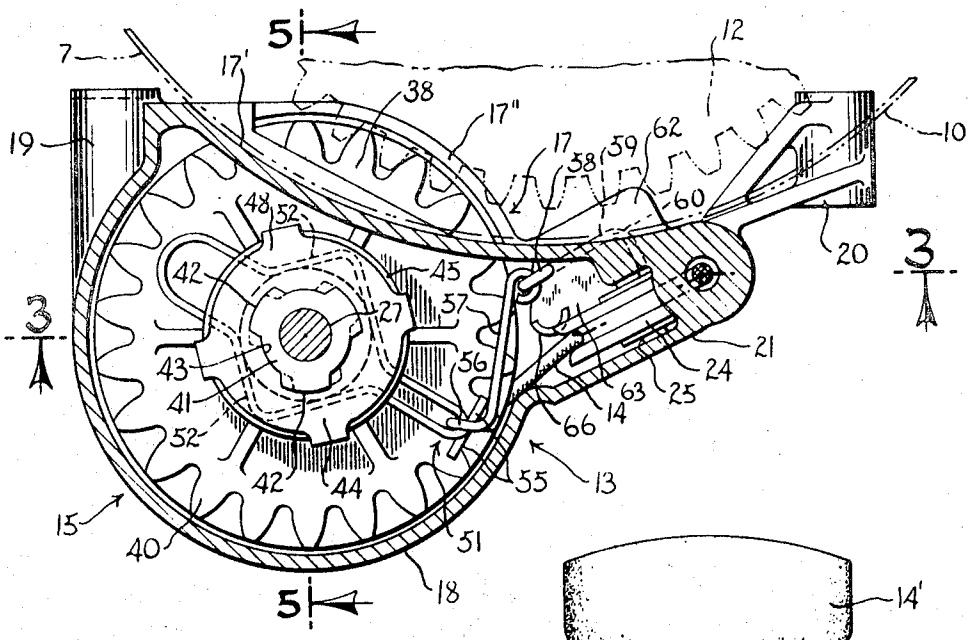

Fig. 3.

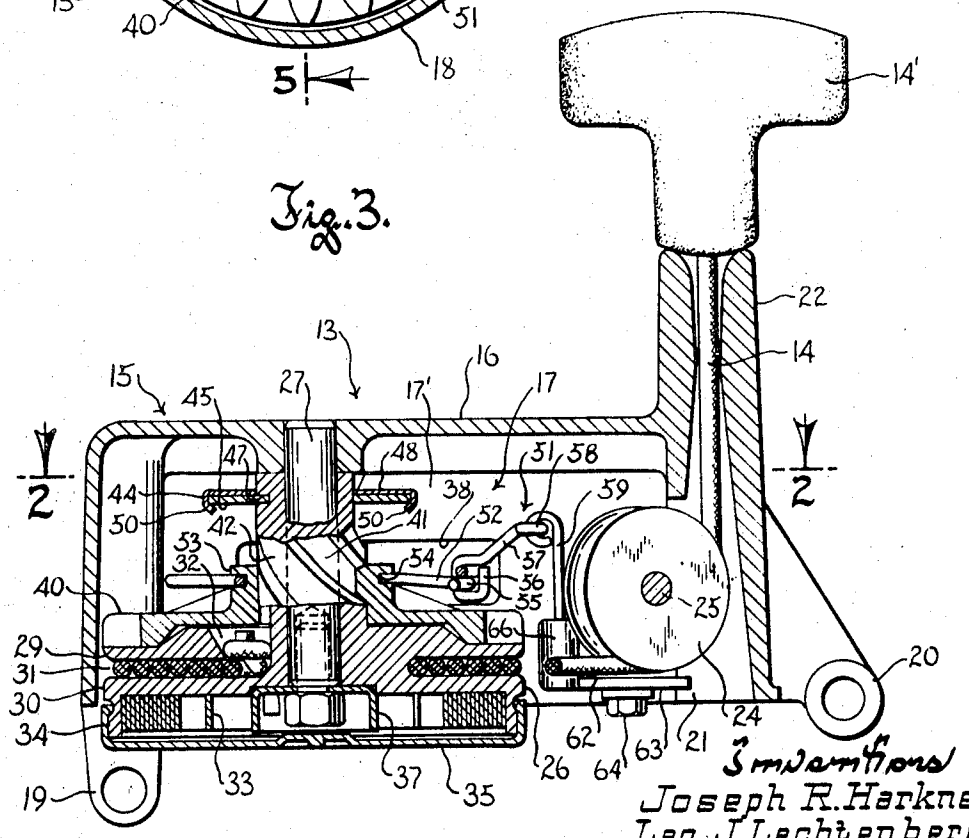

Inventors
Joseph R. Harkness
Leo J. Lechtenberg
By
Attorneys

PULL ROPE TYPE STARTER FOR VERTICAL SHAFT ENGINES

Filed Feb. 13, 1968 5 Sheets-Sheet 3

Fig. 4.

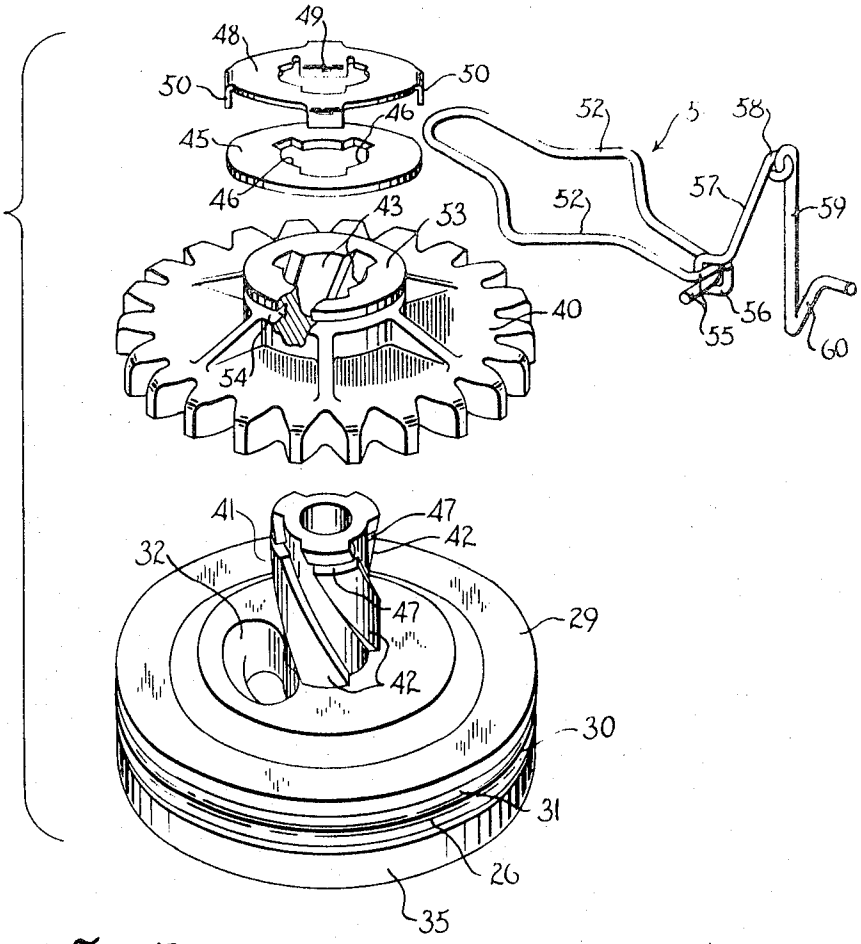

Fig. 5.

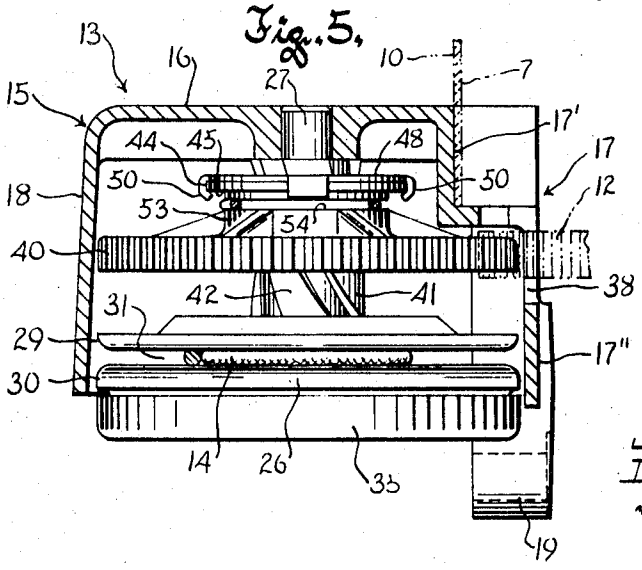

Inventors
Joseph R. Harkness
Leo J. Lechtenberg
By Ira Milton Jones
R. Harney

PULL ROPE TYPE STARTER FOR VERTICAL SHAFT ENGINES

Filed Feb. 13, 1968 5 Sheets-Sheet 4

Fig. 6.

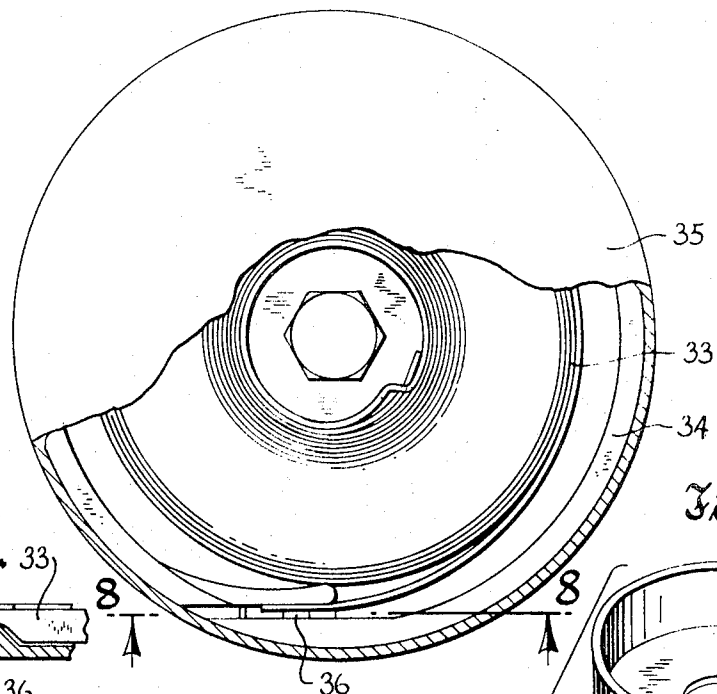

Fig. 8.

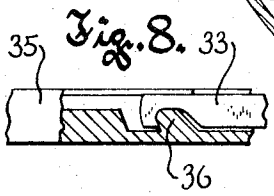

Fig. 7.

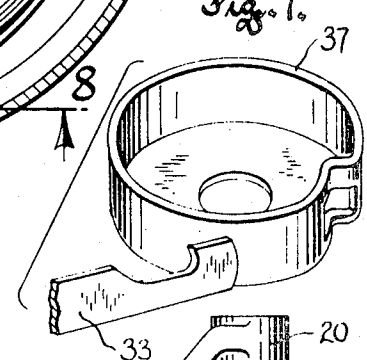

Fig. 10.

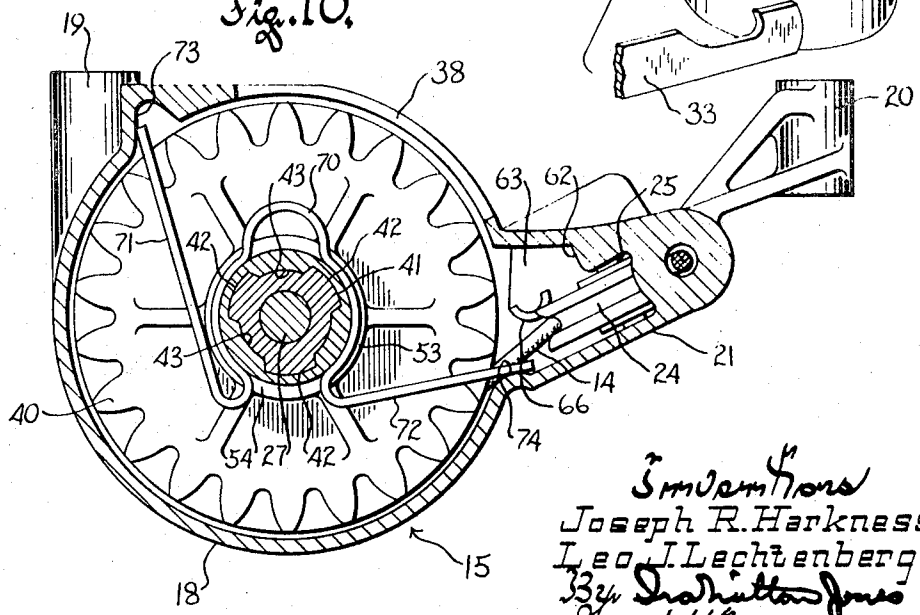

Inventors
Joseph R. Harkness
Leo J. Lechtenberg
By Ira Milton Jones
R. Harmsy

PULL ROPE TYPE STARTER FOR VERTICAL SHAFT ENGINES

Filed Feb. 13, 1968 5 Sheets-Sheet 5

Fig. 9.

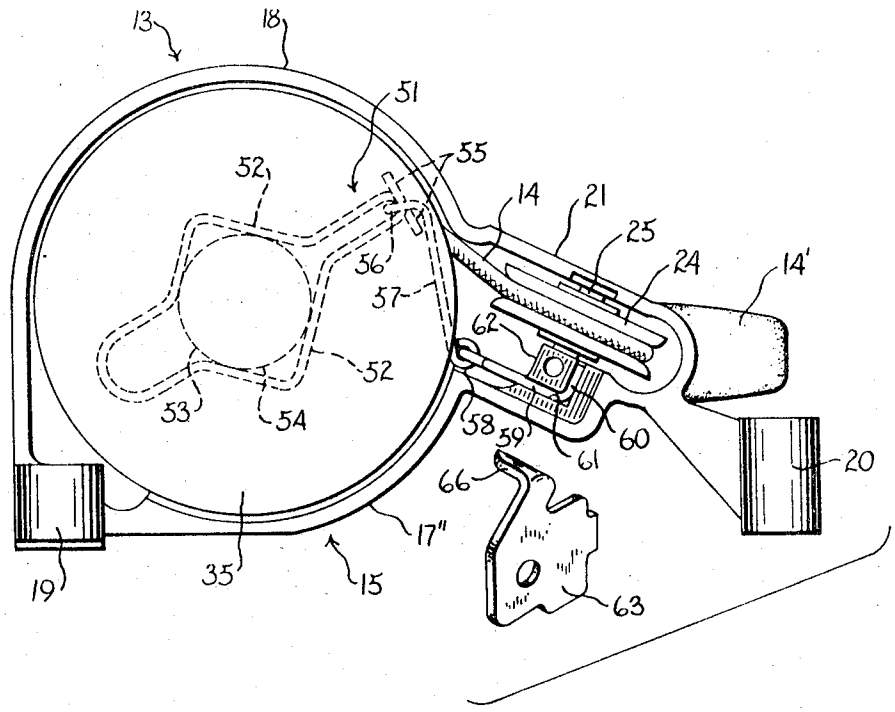

Inventors
Joseph R. Harkness
Leo J. Lechtenberg
By Ira Hutton Jones
Attorney

United States Patent Office

3,465,740

Patented Sept. 9, 1969

1

3,465,740
PULL ROPE TYPE STARTER FOR VERTICAL SHAFT ENGINES

Joseph R. Harkness, Germantown, and Leo J. Lechtenberg, Elm Grove, Wis., assignors to Briggs & Stratton Corporation, Milwaukee, Wis., a corporation of Delaware

Filed Feb. 13, 1968, Ser. No. 705,100
Int. Cl. F02m 1/00
U.S. Cl. 123—185 12 Claims

ABSTRACT OF THE DISCLOSURE

A single cylinder vertical shaft internal combustion engine with a ring gear on its flywheel has a rewind type pull rope starter mounted on the side thereof. The starter has a gear mounted on the hub of a spool that is journalled on a vertical spindle. A screw threaded connection between the hub of the spool and the gear propels the gear upwardly into mesh with the ring gear upon rotation of the spool in one direction by a pull on the starting rope which is wound on the spool. Continued rotation of the spool imparts engine-starting rotation to the gear and the ring gear with which it meshes. The entire starter mechanism is enclosed in a housing which is bolted to the side of the engine crankcase and which has a flat top wall from which the vertical spindle depends. A tubular boss projecting upwardly from the top wall of the housing has the free end portion of the starting rope extending therethrough, the handle attached to the end of the rope being seated on the top of the boss to facilitate its being grasped in preparation to applying a direct upward engine-starting pull of the rope.

This invention relates to engine starters and refers particularly to rewind type pull-rope starters for small internal combustion engines such as those commonly employed to power lawn mowers, garden tractors, snow blowers and the like.

Moreover, the invention is primarily concerned with starters for engines in which the crankshaft rotates on a vertical axis.

Heretofore, it has been customary to mount the starters of vertical shaft engines at the very top thereof, and if they were of the pull-rope variety, the pull on the rope had to be applied horizontally. This usually necessitated stooping over, and incurred the danger of accidentally tipping over the machine powered by the engine. The obvious disadvantages of this earlier adaptation of the pull rope starter to vertical shaft engines led to the development of so-called side mounted starters, of which the Hamman Patent No. 3,024,870, is an example.

In those side mounted starters, rotation of the spool or pulley upon which the starting rope is wound was imparted in some way to a screw upon which a gear was mounted for limited axial motion with respect thereto, and for rotation therewith. During initial rotation of the spool or pulley the gear was propelled into mesh with a ring gear on the engine flywheel, and then when further axial movement of the gear was stopped, engine-starting rotation was imparted to the gear. Broadly, that was a modified adaptation of the well known Bendix starter.

However, prior starters of this type have left much to be desired, and it is therefore the purpose of this invention to provide a more efficient, smoother operating side mounted starter, and one which blends well into the overall design of the engine upon which it is mounted.

One of the requirements of a starter that employs the Bendix type screw principle to effect driving engagement between the driving gear and the flywheel ring gear, is the provision of some means for impositively restraining

2

the driving gear from rotating with the screw upon which it is mounted, to assure prompt propulsion of the gear into mesh with the ring gear. This restraint is conveniently accomplished with a friction brake that acts upon the driving gear, and with a view towards assuring continued smooth operation of the starter, the brake employed in the starter of this invention automatically adjusts itself to maintain a predetermined resistance to rotation of the driving gear despite inevitable accumulations of dirt on the contacting surfaces of the brake.

It is also an object of this invention to provide an engine starter of the character described in which the component parts—especially those which comprise the brake for resisting rotation of the driving gear, are so designed and constructed that wear is held to a minimum.

With these observations and objects in mind, the manner in which the invention achieves its purpose will be appreciated from the following description and the accompanying drawings. This disclosure is intended merely to exemplify the invention. The invention is not limited to the particular structure disclosed, and changes can be made therein which lie within the scope of the appended claims without departing from the invention.

The drawings illustrate two complete examples of the physical embodiment of the invention constructed according to the best modes so far devised for the practical application of the principles thereof, and in which:

FIGURE 1 is a perspective view of a vertical shaft single cylinder engine equipped with the starter of this invention;

FIGURE 2 is a horizontal cross sectional view through the starter mechanism, said view being taken on the plane of the line **2—2** in FIGURE 3;

FIGURE 3 is a vertical sectional view through FIGURE 2 on the plane of the line **3—3**;

FIGURE 4 is an exploded perspective view of the main elements of the starter;

FIGURE 5 is a vertical sectional view through the starter mechanism showing its driving gear in mesh with the flywheel ring gear, said view being taken essentially on the plane of the line **5—5** in FIGURE 2;

FIGURE 6 is a bottom view of the rotary elements of the starter;

FIGURE 7 is a perspective view of the stationary spring anchor and an end portion of the rewind spring;

FIGURE 8 is a detail sectional view on the plane of the line **8—8** in FIGURE 6;

FIGURE 9 is a bottom view of the entire starter with a part thereof removed; and

FIGURE 10 is a horizontal longitudinal sectional view through the starter, illustrating a modified form of friction brake to impositively restrain the driving gear of the starter against rotation.

Referring to the drawings in which like numerals indicate like parts throughout the several views, the numeral **5** designates the crankcase of a single cylinder gasoline engine, the crankshaft of which (not shown) is vertical in the normal operating position of the engine. The usual flywheel **6** is mounted on the upper end of the crankshaft and a blower shroud **7** encloses the flywheel to direct cooling air drawn through a screened inlet opening **8** by impeller blades **9** on the flywheel onto the hot surfaces of the engine. The shroud **7** has a side wall **10** with a cutout or aperture **11** at one side thereof to afford access to the adjacent peripheral portion of the flywheel, and more particularly to a ring gear **12** on the underside of the flywheel.

The engine starter of this invention, designated generally by the numeral **13**, is mounted on the engine in juxtaposition to the aperture **11** in the side wall of the blower housing. The starter is of the pull rope variety and hence has a starting rope **14** with a handle **14'** at its

free end by which a direct upward pull may be exerted on the rope to operate the starter and start the engine.

All of the mechanism of the starter is located in and supported by a housing **15**, preferably made as a diecasting. This housing has a flat top wall **16** and inner and outer side walls **17** and **18** depending from the marginal edges of the top wall. As best seen in FIGURES 2 and 5, the inner edge of the top wall and the upper portion **17'** of the inner side wall **17** are shaped to fit the blower shroud adjacent to its aperture **11**.

A pair of lugs **19** and **20** on the housing **15** provide for its securement to the crankcase of the engine by means of cap screws (one of which shows in FIGURE 1) with the top wall of the housing horizontal and at a level above the aperture **11**.

As best seen in FIGURE 9, which is a bottom view of the starter detached from the engine, the housing **15** has a substantially cylindrical main portion and a peninsular projection **21** extending therefrom. The mounting lug **20** is located on the extremity of this projection.

Also mounted on the outer end portion of the peninsular projection **20** is an upstanding tubular boss **22** rising from its top wall. The bore of this boss leads to the hollow interior of the projection and provides a guideway for the starting rope **14**, which passes down into the interior of the projection and around an idler pulley **24** freely rotatably mounted therein by a horizontal pin **25** fixed in the side walls of the projection. From the pulley **24** the rope extends to a spool or pulley **26** which is freely rotatably journaled on a vertical spindle **27** anchored in and depending from the flat top wall **16** of the housing coaxially with its cylindrical main portion.

The lower portion of the spool or pulley **26** comprises a pair of axially spaced upper and lower flanges **29** and **30** which, between them, define a deep annular groove **31** in which the rope is wound with its adjacent end knotted and seated in a pocket **32** in the upper flange. A spiral recoil or rewind spring **33** normally keeps the rope wound up on the spool or pulley. This spring is contained in a shallow cylindrical enclosure formed at the underside of the lower flange **30** by a short circular skirt **34** depending from the periphery of the lower flange and a cover or cap **35** snapped onto the skirt. The outer end of the spring **33** is attached to the skirt by being hooked onto a lug **36** integral therewith (see FIGURE 8) and the inner end of the spring is hooked onto the side wall of a cup-shaped washer **37** which is fixed to the bottom end of the spindle and coacts with a boss on the underside of the housing top wall **16** to confine the spool or pulley against axial movement.

It will be noted that the spool or pulley **26** is so positioned that the plane of its rope receiving groove **31** is substantially tangent to the periphery of the idler pulley **24**. Such tangency also exists between the idler pulley and the bore of the tubular boss **22**. Hence, the pulley **24** defines a right angular bend in the path to which the starting rope is constrained. The rope is held taut by the rewind spring by virtue of the handle **14'** being seated on the boss **22**.

The flanges **29–30** which constitute the lower portion of the spool or pulley are but slightly smaller in diameter than the cylindrical main part of the housing **15**. Hence they substantially close the bottom of the housing and minimize the likelihood of dirt getting into the housing and fouling the starter mechanism. This objective is also furthered by having the lower portion **17''** of the side wall **17** concentrically embrace the adjacent part of the flanges **29–30**.

As shown in FIGURE 5, the upper portion **17'** of the inner side wall of the housing **15**, which is shaped to fit the side of the blower shroud above the aperture **11**, is spaced from the lower portion **17''** to provide an oblong opening **38** communicating the interior of the housing **15** with the interior of the blower shroud. This opening is so located and of such proportions that a gear **40** which is mounted on a hub **41** for limited axial movement thereon, will protrude through the opening into mesh with the ring gear **12** when the gear is at the upper limit of its permitted axial movement. As shown, the gear **40** is of the same diameter as the flanges **29–30**.

The hub **41** constitutes the upper portion of the spool or pulley **26** and has steeply pitched splines **42** thereon to mesh with mating splines **43** in the bore of the gear. Rotation of the spool or pulley with respect to the gear thus imparts axial movement of the gear along the hub.

In the normal position of the parts the gear is at its lowermost limit of axial movement, seated on the upper flange **29**. From this position, the gear will travel to its upper limit of motion meshing with the ring gear, upon rotation of the spool or pulley produced by a pull on the starting rope provided the gear is restrained against rotation. This upper position of the gear is defined by a stop abutment **44** on the hub **41**.

The stop abutment **44** consists of a stamped washer **45** having a castellated hole of a size and shape to fit the hub, positioned on the hub with the castellations **46** at the edge of its hole received in grooves **47** that extend transversely across the splines **42**. A retaining washer **48** applied over the washer **45** holds the latter against turning out of this interlocked relationship with the hub. To this end, the hole in the retaining washer is also castellated and of a size to receive the splined hub, but in addition it has a down-turned tongue **49** to enter any one of the spaces between the three castellations **46**, which spaces are accessible when the castellations **46** are in the grooves **47**. With the tongue **49** received in one of these three spaces, the washers are held against relative rotation, and since the retaining washer cannot rotate without also moving endwise along the splined hub, it follows that securement of the retaining washer against endwise movement on the hub effectively locks the entire assembly together. To prevent endwise movement of the retaining washer, tangs **50** on its periphery are clinched over the edge of the washer **45**.

As noted hereinbefore, rotation of the spool or pulley with respect to the gear, effects endwise movement of the gear, one way or the other depending upon the direction of the rotation of the spool or pulley. Thus when this rotation is the result of a pull on the starting rope, the gear moves upward until it collides with the stop abutment **44** whereupon continuation of the pull on the rope imparts engine starting rotation to the gear. When the engine starts and overruns the gear, the direction of relative rotation between the gear and the spool or pulley is reversed and the gear is caused to resume its normal position disengaged from the ring gear, whereupon the spring rewinds the rope onto the spool or pulley.

To assure the described operation, the gear must be impositively restrained against rotation. For this purpose, a brake **51** is provided. This brake comprises a generally hairpin-shaped wire yoke, the legs **52** of which embrace the hub portion **53** of the gear, in which relationship they are retained by the outwardly bent or offset shape of the medial portions of the legs and the reception thereof in an annular groove **54** in the hub portion. The free ends of the legs **52** are bent laterally towards one another to provide substantially parallel fingers **55**. These fingers are received in a loop **56** on the free end of a link **57**, so that the loop lies between the adjacent free ends of the legs **52** and the legs can be spread apart without losing their operative relationship with the loop. The other end of the link is pivoted, as at **58**, to a bracket **59** which is fixed with respect to the housing **15**.

Although the bracket **59** may take any desired form, it has been found expedient to make the same of stiff wire, as is also the link **57**. Anchorage for the bracket **59** is conveniently provided by bending its end portion remote from the pivot **58** laterally and again at right angles to form a foot **60**, and confining this foot in a downwardly opening right angularly shaped grooves **61** in the bot-

tom of a boss **62** which is an integral part of one side wall of the peninsular projection **21**. A retaining plate **63** is secured to the bottom of the boss **62** by a screw **64** to cover the groove **61** and clamp the foot **60** therein.

The plate **63** substantially closes the bottom of the projection **21** and thus keeps the rope from disengaging the pulley **22**. It also has a post **66** formed thereon to project upwardly alongside the stretch of the rope extending from the pulley **22** to the spool, to guide the rope and keep it tracking on the pulley as it is unwound from the spool.

Though the manner in which the described brake device functions may be understandable from the foregoing description, in the interest of completeness it is pointed out that although the link is pivotally connected to the rigidly mounted bracket **59**, this pivotal connection does not permit the loop **56** to move laterally with respect to the axis of the gear. Hence, the engagement of the free end portion of either of the legs **52** with the loop **56** will keep the yoke from turning with the gear.

The normal spacing between the legs **52** is such that the force with which they grip the gear is sufficient—even when the parts are entirely free from dirt—to hold the gear against turning with the spool or pulley during axial displacement of the gear to and from meshing engagement with the ring gear. But with an increase in friction between the legs **52** of the yoke and the botton of the groove **54** in which they are received, due to accumulation of dirt in the groove, the added torque applied against the loop **56** by the active leg will spread the legs further apart and thereby diminish their grip upon the gear. There is, therefore, an automatic adjustment of the drag applied by the brake with the result that the desired resistance to rotation of the gear is obtained without undue wear despite the accumulation of dirt between the engaging surfaces of the brake and gear.

Moreover, in view of the pivoted mounting of the link **57**, the brake mechanism automatically—and very smoothly and easily—accommodates itself to the bodily movement of the legs **52** axially of the gear as the latter moves up or down, without in anywise interfering with the necessary restraint to movement of the extremities of the legs laterally of the gear.

Of course, it is also possible to employ the less sophisticated brake illustrated in FIGURE 10, to impositively restrain rotation of the gear. In this case, the legs of the hairpin shaped wire **70** which embrace the hub of the gear and are seated in the groove **54**, have long extensions **71** and **72** which reach from the hub of the gear to shoulders **73** and **74** on the housing side walls. Needless to say, this simpler brake mechanism does not function as smoothly as does the preferred brake which is self-adjusting and freely maintains its proper relationship to the gear as the latter moves up or down.

What is claimed as our invention is:

1. A recoil-type pull rope starter for a vertical shaft engine having a crankcase, a flywheel with a ring gear thereon and a shroud with a side wall embracing the flywheel but having an aperture through which the adjacent portion of the ring gear is accessible, said starter comprising:

(A) a housing having a top wall and side wall means depending from the marginal edges of the top wall, the top wall being shaped to have an edge thereof fit the contour of the apertured portion of the side wall of the shroud, and the adjacent portion of the housing side wall means being interrupted to provide an opening through which access may be had to and from the housing interior;

(B) means for securing the housing to the crankcase of the engine with its top wall horizontal and said edge therein contiguous to said apertured portion of the side wall of the shroud above the aperture therein,

so that the ring gear is accessible from the interior of the housing through said access opening in the adjacent portion of the side wall means;

(C) a vertical spindle fixed to the top wall of the housing and depending therefrom;

(D) a spool freely rotatable on said spindle but restrained against endwise movement with respect thereto, said spool having

(1) axially spaced upper and lower flanges on its lower end portion defining an annular rope receiving groove, and

(2) a hub extending upwardly from the upper flange;

(E) a gear mounted on the hub of the spool for axial movement with respect thereto between an inoperative position and an operative position in which a peripheral portion of the gear protrudes from the housing through said access opening to have meshing engagement with the ring gear;

(G) means on the spool to limit axial movement of the gear and to define its operative and inoperative positions;

(H) means providing a screw-threaded connection between the hub of the spool and the gear,

whereby rotation of the spool in one direction relative to the gear effects axial movement of the gear to its defined operative position and continued rotation of the spool in said direction imparts engine-starting rotation to the gear;

(I) a pull rope in said annular groove with one end thereof attached to the spool and its other end portion extending therefrom;

(J) rope guiding means on the housing constraining said other end portion of the rope to move linearly along a defined path, a portion of which extends vertically through the top wall of the housing so that engine-starting rotation may be applied to the spool by an upward pull on said other end of the rope; and

(K) a recoil spring reacting between the spool and said spindle.

2. The engine starter of claim **1**, wherein said rope guiding means comprises a tubular guideway rising above the top wall of the housing,

and an idler pulley freely rotatably mounted inside the housing for rotation about a horizontal axis with its periphery substantially tangent to the axis of the tubular guideway and the rope receiving groove of the spool.

3. The engine starter of claim **1**, further characterized by friction means reacting between the housing and the gear to yieldingly restrain rotation of the gear.

4. The engine starter of claim **3**, wherein said friction means comprises

(1) a hub on the gear,

(2) a substantially hairpin-shaped resilient wire yoke, the legs of which embrace and grip the hub on the gear, and

(3) abutment means supported from the housing and disposed between the legs of the yoke, to restrain the yoke from rotating with the gear,

the reaction between the legs of the yoke and the abutment means in the event of excessive friction between the yoke and the hub causing the legs to spread and reduce their frictional grip upon the hub of the gear.

5. The engine starter of claim **4**, wherein the hub on the gear has an annular groove in which the legs of the yoke are snugly received, so that the yoke is constrained to move with the gear as the gear moves axially along the hub of the spool, and

wherein said abutment means between the legs of the yoke is on the free end of a link which has its other end pivoted to a part that is anchored with respect to the housing,

so that the free end of the link, with the abutment means thereon can move with the legs of the yoke as the yoke partakes of axial movement of the gear.

6. The engine starter of claim **4**, wherein the hub on the gear has an annular groove in which the legs of the yoke are snugly received,

so that the portion of the yoke adjacent to the hub of the gear is constrained to travel with the gear as it moves axially along the hub of the spool,

and wherein the legs of the yoke have elongated divergent end portions that extend from the hub of the gear to substantially opposite side wall portions of the housing, so that the housing itself provides said abutment means.

7. The engine starter of claim **1**, wherein the threaded connection between the hub of the spool and the gear comprises mating steeply pitched splines,

and wherein the means to limit axial movement of the gear when the latter is in its operative position comprises a washer having the edge of its hole castellated and of a size to snugly fit the splined hub of the spool,

so that application of the washer to the hub requires rotation of the washer about the spool hub,

the splines on the spool hub having transverse grooves to receive the castellations on the edge of the hole in the washer upon alignment of the washer with said grooves and rotation of the washer, to thereby secure the washer against axial displacement,

and a second washer on the hub of the spool secured against rotation with respect to the first washer and the spool, to hold said first washer against rotation out of its interengaging relation with the spool hub.

8. A device for converting rotation of a driving member about a fixed axis into limited axial motion of a coaxial driven member followed by rotation of the driven member in unison with the driving member,

wherein said members have a screw threaded connection by which relative rotation between said members produces relative axial motion,

wherein axially spaced abutments on the driving members define the limits of axial motion of the driven member, and

wherein the driven member is impositively restrained from rotating with the driving member,

characterized in the means for impositively restraining rotation of the driven member comprises:

(A) a substantially hairpin-shaped resilient wire yoke, the legs of which embrace and grip the driven member;

(B) an abutment between the extremities of the legs; and

(C) means mounting said abutment in a manner securing it against movement transversely of the common axis of the driving and driven members but with freedom for movement parallel to said axis,

whereby the frictional grip of the legs on the driven member brakes the same against rotation while excessive friction at said grip results in reduction of the braking effect upon the driven member.

9. The device of claim **8**, wherein the driven member has an annular groove in which the legs of the yoke are snugly received, so that the yoke partakes of any axial motion of the driven member,

and wherein the abutment and the means for mounting the abutment comprises a link having one end pivoted to a fixed anchor, a loop on the free end of the link,

and oppositely facing lateral extensions on the extremities of the legs of the yoke slidably received in the loop,

whereby the loop lies between the legs and constitutes the abutment,

the pivotal mounting for the link providing the freedom for movement of the abutment parallel to the common axis of the driving and driven members.

10. A starter for an internal combustion engine having a crankcase and a flywheel with a ring gear thereon, comprising:

(A) structure defining a housing having a closed top wall and having side wall means depending therefrom, said side wall means having an interruption therein at one side of the housing to provide an opening for access to and from the interior of the housing at said side thereof;

(B) a spindle fixed in the housing with its axis normal to the top of the housing;

(C) means on the housing by which it may be secured to the crankcase of an engine with said access opening opposite the ring gear on the flywheel and the spindle parallel to the flywheel axis;

(D) a spool freely rotatable but not longitudinally movable on the spindle;

(E) a gear mounted on the spool for limited axial movement therealong between an inoperative position remote from the top of the housing and a defined operative position adjacent to the underside of the housing top with a peripheral portion of the gear protruding from the housing through said access opening to have meshing engagement with the ring gear of an engine on which the starter is mounted;

(F) means providing a screw-threaded connection between the spool and the gear whereby rotation of the spool in one direction relative to the gear propels the gear to its operative position and continued rotation of the spool in said direction imparts engine-starting rotation to the gear; and

(G) means for imparting rotation to the spool in said direction.

11. A pull-rope starter for an internal combustion engine having a crankcase and a flywheel with a ring gear thereon, said starter being of the type wherein a pull on a starter rope wound on a spool imparts rotation in one direction to the spool, propels a gear that is mounted on and has a threaded connection with the spool, to an operative position in mesh with the ring gear and then imparts engine starting torque to the flywheel, and wherein a recoil spring imparts opposite rotation to the spool upon release of the rope to effect retraction of the rope and withdrawal of the gear out of mesh with the ring gear, said starter being characterized by:

(A) structure defining a housing for the starter,

the housing having a top wall and side wall means depending from the top wall,

the side wall means being interrupted at one side of the housing to provide an opening through which the gear may project when in its operative position;

(B) a spindle fixed to the top wall of the housing and projecting downwardly therefrom,

said spindle having the spool freely rotatably but nonlongitudinally movably mounted thereon;

(C) means on the housing by which the housing may be secured to the crankcase of an engine with the spindle parallel to the flywheel axis; and

(D) rope guiding means on the housing constraining rope to move along a defined path, a portion of which extends through the top wall of the housing so that engine starting rotation may be imparted to the spool by an upward pull on the rope,

said rope guiding means including a pulley

mounted in the housing with its axis transverse to that of the shaft.

12. The engine starter of claim **11**, further characterized in that the rope guiding means includes a tubular boss projecting up from the top wall of the housing with its axis substantially tangent to said pulley and through which the rope extends,

and the free end of the rope having a handle attached thereto which seats upon the upper end of the tubular boss to limit retraction of the rope by the recoil spring.

References Cited

UNITED STATES PATENTS

2,604,882	7/1952	Schnacke.
2,697,423	12/1954	Hare.
3,270,732	9/1966	Harkness.
3,332,410	7/1967	Dwyer.
3,375,813	4/1968	Hamman.
3,375,814	4/1968	Hamman.

C. J. HUSAR, Primary Examiner