DuroMax NEXT GENERATION POWER SYSTEMS

DUAL FUEL

DUAL FUEL HYBRID ELITE XP4400EH

Product Support (Product: information, application, service info & warranty questions)

Please email us at support@duromaxgenerators.com
or call 1-800-629-3325 (option 3) Monday -Thursday 6am to 6:30pm and Fridays 6am to 5pm. PST

This manual provides information regarding the operation and maintenance of these products.
We have made every effort to ensure the accuracy of the information in this manual.
We reserve the right to change this product at any time without prior notice.

EX1004
HARBOR FREIGHT TOOLS
IPR2025-01272

FEATURES

- **Dual Fuel Option, LPG or Gasoline.**
- **Durable 7.0 HP, Air Cooled Overhead Valve Engine.**
- **Heavy Duty Steel Frame with Four Point Fully Isolated Motor Mounts for Smooth and Quiet Operation.**
- **Wheel and Handle Kit for Easy Transporting.**
- **Full Power Panel with Engine Shutoff Switch, Volt Meter, Circuit Breaker and Power Outlets.**
- **(2) Fully Protected 120V Outlets & (1) 120V/240V Twist-Lock Outlet.**
- **8 Hour Run Time.**
- **All Steel 4.0 Gal. Fuel Tank with EZ-Read Gauge.**
- **Low Oil Shut-Off Protects Engine.**
- **Super Quiet Muffler Reduces Engine Noise.**
- **Meets EPA and CARB Emission Standards.**

This manual provides information regarding the operation and maintenance of these products.
We have made every effort to ensure the accuracy of the information in this manual.
We reserve the right to change this product at any time without prior notice.

Notice Regarding Emissions

Engines that are certified to comply with California and U.S. EPA emission regulations for SORE (Small Off Road Equipment), are certified to operate on regular unleaded gasoline, and may include the following emission control systems: (EM) Engine Modifications and (TWC) Three-Way Catalyst (if so equipped).

GENERAL SAFETY PROCEDURES

Please familiarize yourself with the following safety symbols and words:
The safety alert symbol ⚠ is used with one of the safety words (**DANGER, CAUTION,** or **WARNING**) to alert you to hazards. Please pay attention to these hazard notices both in this manual and on the generator.

DANGER: Indicates a hazard that will result in serious injury or death if instructions are not followed.

WARNING: Indicates a strong possibility of causing serious injury or death if instructions are not followed.

CAUTION: Indicates a possibility of personal injury or equipment damage if instructions are not followed.

⚠DANGER: This generator produces poisonous carbon monoxide gas when running. This gas is both odorless and colorless. Even if you do not see or smell gas, carbon monoxide may still be present. Breathing this poison can lead to headaches, dizziness, drowsiness, and eventually death.

- Use outdoors **ONLY** in non-confined areas.
- Keep several feet of clearance on all sides to allow proper ventilation of the generator.

⚠ **WARNING: The exhaust from this product contains chemicals known to the State of California to cause cancer, birth defects, or other reproductive harm.**

⚠ **WARNING: This generator may emit highly flammable and explosive gasoline vapors, which can cause severe burns or even death. A nearby open flame can lead to explosion even if not directly in contact with gas.**

- Do not operate near open flame.
- Do not smoke near generator.
- Always operate on a firm, level surface.
- Always turn generator off before refueling. Allow generator to cool for at least 2 minutes before removing fuel cap. Loosen cap slowly to relieve pressure in tank.
- Do not overfill gas tank. Gas may expand during operation. Do not fill to the top of the tank.
- Always check for spilled gas before operating.
- Empty the gasoline tank before storing or transporting the generator.
- Before transporting, turn fuel valve to off and disconnect the spark plug.

⚠ **WARNING: This generator produces powerful voltage, which can result in electrocution.**

- ALWAYS ground the generator before using it (see the "*Grounding the Generator*" portion of the "*PREPARING THE GENERATOR FOR USE*" section).
- Generator should only be plugged into electrical devices, either directly or with an extension cord. NEVER connect to a building electrical system without a qualified electrician. Such connections must comply with local electrical laws and codes. Failure to comply can create a backflow of power, which may result in serious injury or death to utility workers.
- Use a ground fault circuit interrupter (GFCI) in highly conductive areas such as metal decking or steel work. GFCIs are available in-line with some extension cords.
- Do not use uncovered in rainy or wet conditions.
- Do not touch bare wires or receptacles (outlets).
- Do not allow children or non-qualified persons to operate.

⚠ **WARNING: This generator produces heat when running. Temperatures near exhaust can exceed 150°F (65°C).**

- Do not touch hot surfaces. Pay attention to warning labels on the generator denoting hot parts of the machine.
- Allow generator to cool several minutes after use before touching engine or areas which heat during use.

CAUTION: Misuse of this generator can damage it or shorten its life.

- Use the generator only for its intended purposes.
- Operate only on dry, level surfaces.
- Allow generator to run for 3 - 5 minutes before connecting any electrical devices.
- Shut off and disconnect any malfunctioning devices from generator.
- Do not exceed the Wattage capacity of the generator by plugging in more electrical devices than the unit can handle (see "*PRECAUTIONS-OVERLOADING THE GENERATOR*").
- Do not turn on electrical devices until after they are connected to the generator.
- Turn off all connected electrical devices, and turn off the breaker, before stopping the generator.

In addition to the above safety notices, please familiarize yourself with the safety and hazard markings on the generator.

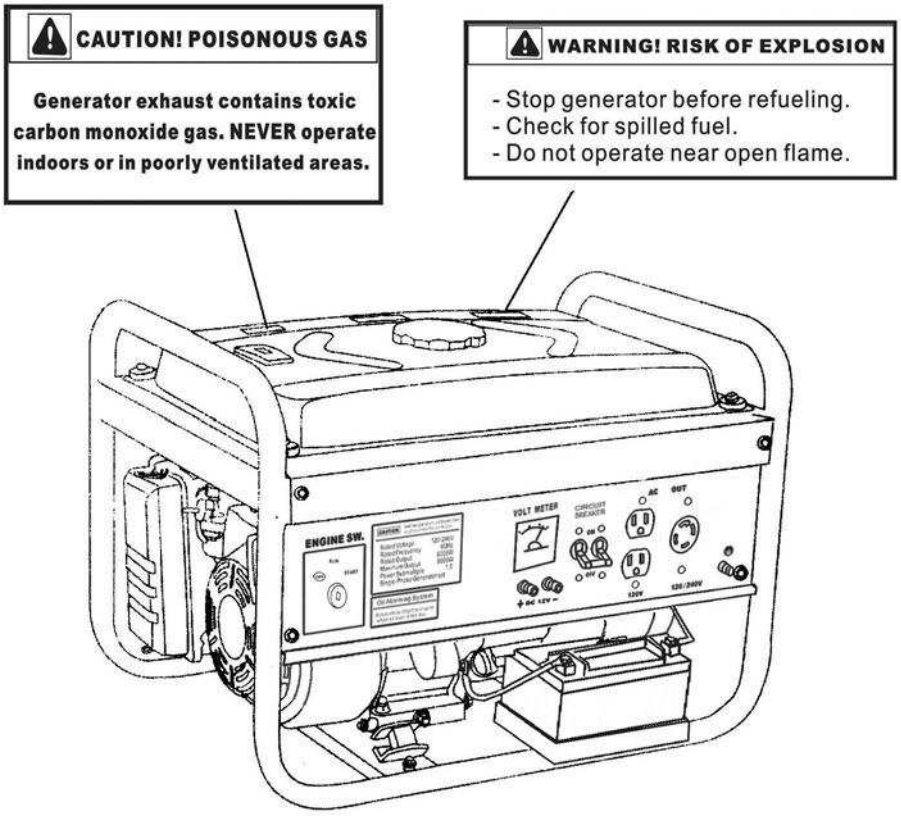

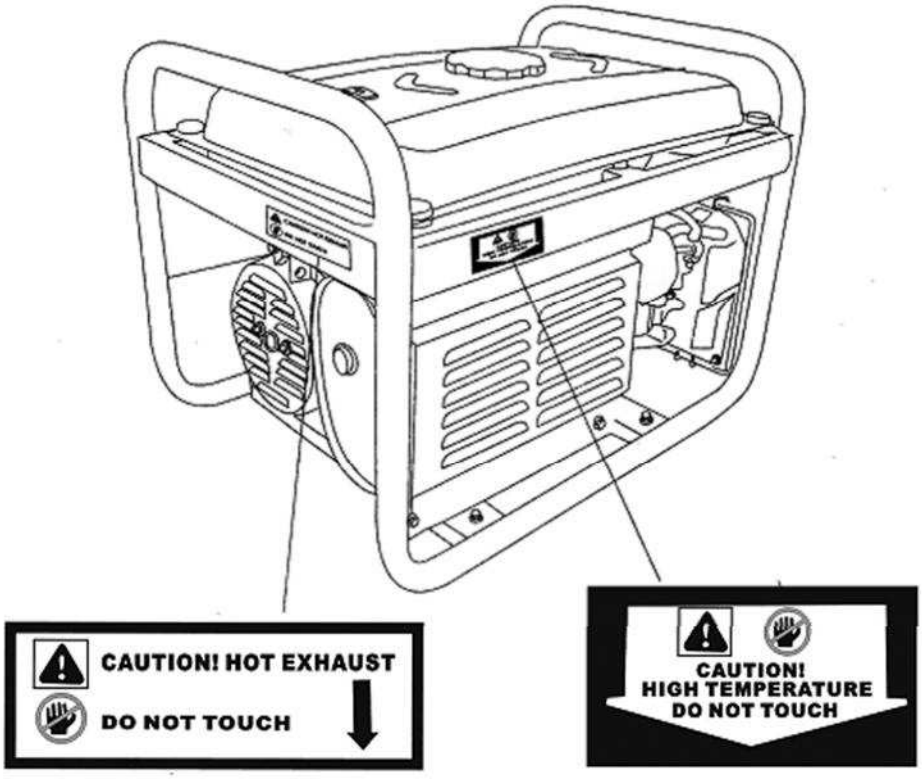

PACKAGE CONTENTS

Your generator comes with the items listed below. Please check to see that all of the following items are included with your generator.

Screw driver

Spanner

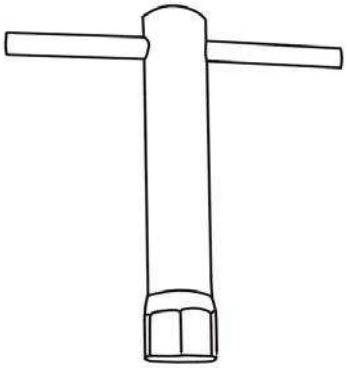

Spark plug wrench

GENERATOR COMPONENTS

Please familiarize yourself with the locations and functions of the various components and controls of your generator.

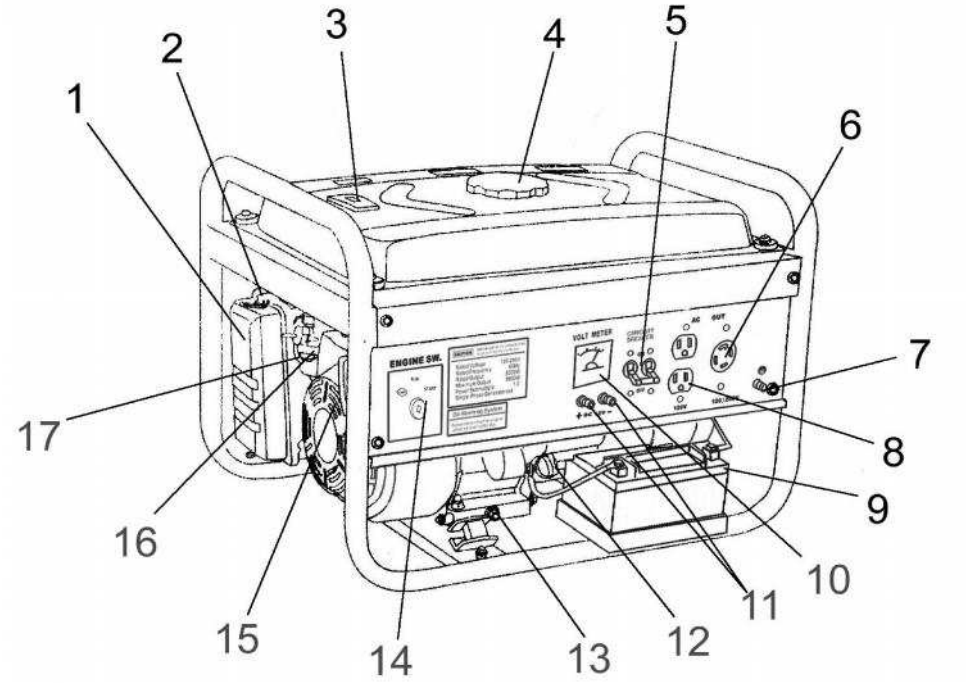

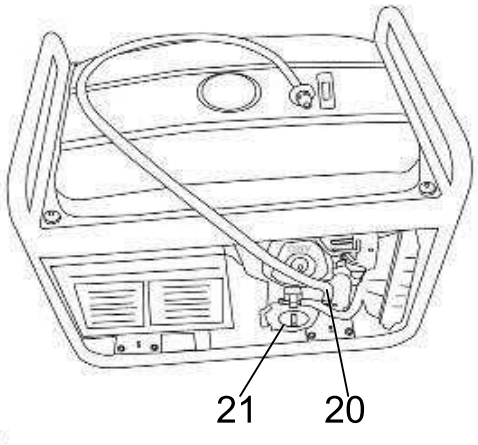

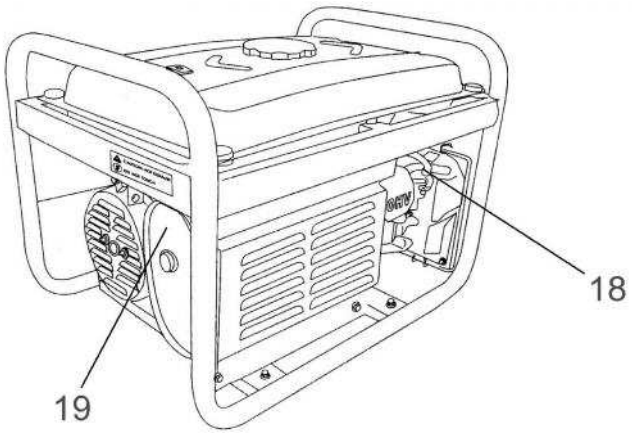

1. **Air cleaner -** a removable, cleanable, sponge-like element that limits the amount of dirt pulled into the engine.
2. **Choke lever -** Adjusts the amount of air let into the engine.
3. **Fuel Gauge -** Indicates the amount of fuel in the tank.
4. **Fuel Cap -** Access to the fuel tank for adding fuel.
5. **Circuit Breaker -** Reset switch that protects the generator from electrical overload.
6. **120/ 240 Volt AC Receptacle -** Use to connect electrical devices that run 120 and/or 240 Volt, 60Hz, single phase, AC current (NEMA L14-30).
7. **Ground Terminal -** Connect grounding wires here to properly ground unit.
8. **120 Volt AC Receptacle -** Use to connect electrical devices that run 120 Volt, 60 Hz, single phase, AC current (2×duplex GFCI).
9. **12V DC Battery.**
10. **Volt Meter -** Provides reading of voltage output.
11. **12v DC Receptacle-** Use for charging 12 Volt automotive-type batteries only.

12. **Oil Filler Cap-** Use to Add oil or checking the oil.
13. **Oil Fill and Dipstick-** Location for checking and filling engine oil.
14. **Engine Switch-** Used to start/stop engine.
15. **Recoil Starter-** Pull-cord for starting engine.
16. **Fuel Filter Cup-** Traps dirt and water from fuel before it enters the engine.
17. **Fuel valve-** Allows fuel to enter engine.
18. **Spark plug-** Provides proper engine ignition.
19. **Muffler-** Reduces engine noise.
20. **Hose connector-** Connect liquid propane gas to generator.
21. **Pressure Release Valve-** Provides regulated liquid propane gas supply.

PREPARING THE GENERATOR FOR USE

Using the Generator for the First Time
If you are using the generator for the first time, there are a few steps you must take to prepare it for operation.

Step 1 - Add oil

The generator requires engine oil to operate properly. The generator, when new from the package, contains no oil in the crankcase. You must add the proper amount of oil before operating the generator for the first time. This amount, which is equal to the oil capacity of the engine crankcase, can be found on the chart in *figure 1*. When filling the engine with oil in the future, please refer to this chart.

Model number	**XP4400H**	**XP4400EH**
Engine oil capacity	20 fluid oz.	

Figure 1- Generator Oil Capacity

CAUTION:
- **Do not apply engine oil with additives or 2-stroke gasoline engine oil,** as they haven't enough lubrication, which may shorten the engine's service life.
- **Engine oil recommended: SAE 10W-30.** As viscosity varies with regions and temperatures, so the lubricant has to be selected in accordance with our recommendation.

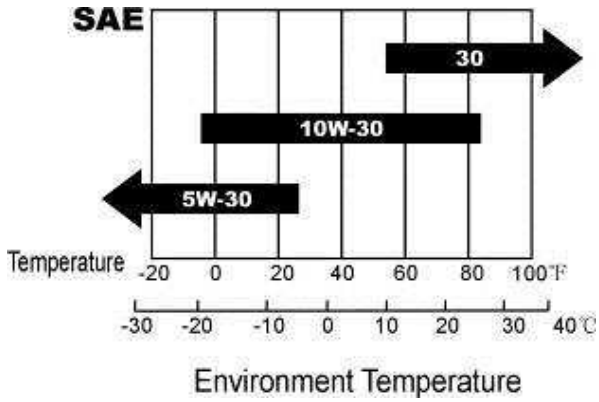

To add oil, follow these steps:
1. Make sure the generator is on a level surface.
2. Unscrew the oil filler/dipstick cap from the engine as shown in *figure 2*.
3. Using a funnel, add the appropriate amount of oil, as found in *figure 1*, into the crankcase. You will know the crankcase is full when the oil level has reached the lower lip of the opening you have just poured the oil into (see *figure 3*).
4. Replace oil filler cap.

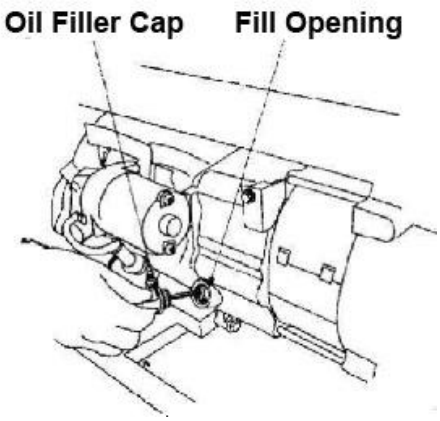

Figure 2- Unscrewing the oil cap

Figure 3 - Adding oil

Step 2 - Add Gasoline

⚠ **WARNING: Gasoline and gas fumes are highly flammable.**

- **Do not fill tank near an open flame.**
- **Do not overfill. Always check for fuel spills.**

To ensure that the generator runs smoothly use only FRESH, UNLEADED GAS WITH AN OCTANE RATING OF 87 OR HIGHER.

To add gasoline:

1. Make sure the generator is on a level surface.
2. Unscrew gas cap and set aside (NOTE: the gas cap may be tight and hard to unscrew).
3. Slowly add unleaded gasoline to the fuel tank. Be careful not to overfill. Please refer to the chart in *figure 4* to find the gas capacity of your generator model. The fuel gauge on the top of the gas tank indicates how much gasoline is in the generator gas tank. **NOTE: Gas can expand. Do not fill the gas tank to the very top.**
4. Replace fuel cap and wipe up any spilled gasoline with a dry cloth.

IMPORTANT:

- Never use an oil/gasoline mixture.
- Never use old gas.
- Avoid getting dirt or water in the fuel tank.
- Gas can age in the tank and make it hard to start up the generator in the future.
- Never store generator for extended periods of time with fuel in the tank.

Model number	**XP4400H**	**XP4400EH**
Gas tank capacity	15L (3.96 US Gallons)	

Figure 4 - Gas Tank Capacity

Step 3 - Ground the Generator

⚠ **WARNING: Failure to properly ground the generator can result in electrocution.**

Ground the generator by tightening the grounding nut against a grounding wire (see *figure 5*). A generally acceptable grounding wire is a No. 12 AWG (American Wire Gauge) stranded copper wire. This grounding wire should be connected at the other end to a copper or brass-grounding rod

that is driven into the earth. Grounding codes can vary by location. Please contact a local electrician to check the grounding regulations for your area.

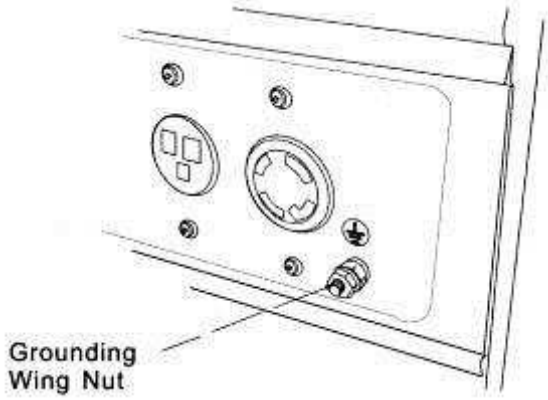

Figure 5 – Attaching the Grounding Wire to the Generator

Subsequent Use of the Generator

If this is not your first time using the generator there are still steps you should take to prepare it for operation.

IMPORTANT: At this point you should be familiar with the procedures described in the first portion of this section entitled "*Using the Generator for the First Time*." If you have not yet read this section, go back and read it now.

Step 1- Check the oil

The generator is equipped with an automatic shutoff to protect it from damage due to low oil. Nonetheless, you should check the oil level of the engine before each use to ensure that the engine crankcase has a sufficient amount.

To check the oil level:

1. Make sure the generator is on a level surface.
2. Unscrew the oil filler/dipstick cap.
3. With a dry cloth, wipe the oil off of the stick on the inside of the cap.
4. Insert the dipstick as if you were replacing the cap and then remove again. There should now be oil on the stick. If there is no oil on the stick, or oil only at the very end of the stick, you should add oil until the engine crankcase is filled (see "*Adding Oil*" portion of the "*Maintenance*" section).
5. Be sure to replace the cap when finished checking oil.

NOTE: The oil capacity for your generator can be found in the "*Specifications*" section of this manual.

Step 2 - Check the Gas Level

Before starting the generator, check to see that there is sufficient gasoline in the gas tank. The fuel gauge on top of the generator will indicate the gas level in the tank. Add gas if necessary according to the steps in the "Adding Gasoline" portion of the "Maintenance" section.

⚠ **WARNING: Gasoline and gasoline fumes arc highly flammable.**

- Do not fill tank near an open flame.
- Always allow engine to cool for several minutes before refueling.
- Do not overfill (check the "Specifications" section for the tank capacity of your generator). Always check for fuel spills.

⚠ IMPORTANT:

- Use only UNLEADED gasoline with an octane rating of 87 or higher.
- Do not use old gas.
- Never use an oil/gasoline mixture.
- Avoid getting dirt or water in the fuel tank.
- Never store generator for extended periods of time with fuel in the tank.

Step 3- Ground the Generator

⚠ **WARNING: Failure to properly ground the generator can result in electrocution.** Ground the generator by tightening the grounding nut against a grounding wire (see figure 5). A generally acceptable grounding wire is a No. 12 AWG (American Wire Gauge) stranded copper wire. This grounding wire should be connected at the other end to a copper or brass-grounding rod that is driven into the earth.

Grounding codes can vary by location. Please contact a local electrician to check the grounding regulations for your area.

STARTING THE GENERATOR - Gasoline or LPG separately

⚠ **CAUTION:**

When using gasoline, LPG must be shut off! When using LPG, gasoline must be shut off!

⚠ **Disconnect all electrical loads from the generator before attempting to start!**

To start your generator with gasoline, perform the following steps:

1. Make sure no electrical devices are connected to the generator. Such devices can make it difficult for the engine to start.
2. Check that the generator is properly grounded (see page 13, "*Ground the Generator*").
3 Turn the gasoline fuel valve to the "ON" position
4. Move the choke lever to the "CLOSED" position (see *figure 7*).
5. Set the engine switch to the "ON" position.
6. Pull on the recoil starter handle slowly until a slight resistance is felt (see *figure 8*). Then pull quickly to start the engine. Return cord gently into the machine. Never allow the cord to snap back.
7. If engine fails to start, repeat step 4. NOTE: After repeated attempts to start the engine, please consult the troubleshooting guide before attempting again.
8. Once the engine has started and run for about a minute, move the choke lever about half way towards the "OPEN" position. Wait another 30 seconds and then move the choke lever all the way to the "OPEN" position.
9. Allow the generator to run for several minutes before attempting to connect any electrical devices.

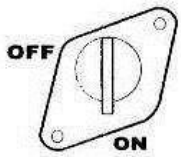

Figure 6 - fuel valve in the "on" position

Figure 7 - Choke in the close position

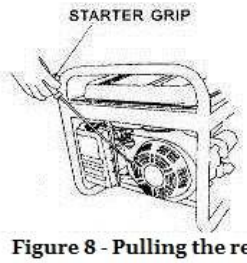

Figure 8 - Pulling the recoil start.

To start your generator with LPG, perform the following steps:

1. Make sure no electrical devices are connected to the generator.
2. Check that the generator is properly grounded (see page 13, "*Ground the Generator*").
3. Turn the gasoline fuel valve to the "OFF" position (see *figure 6*).
4. Connect the propane gas hose to the regulator (see figure B).
5. Connect the regulator to the liquid propane gas supply and then turn on the liquid propane gas supply, making sure there are no leaks (see figure C).
6. Open the clasp connected to the Pressure Release Valve (see figure C).
7. Press the button on Pressure Release Valve two to three times before starting the engine. (see figure D)
8. When starting the engine:
   a. If the engine is warm (The unit was run recently) start with the choke half open.
      i. Wait another 30 seconds and then move the choke lever all the way to the "OPEN" position.
   b. If the engine is cold (The unit has not been run for half an hour or more) start with the choke open. (see figure E & F).
9. Pull on the recoil starter handle slowly until a slight resistance is felt (see *figure 8*). Then pull quickly to start the engine. Return cord gently into the machine. Never allow the cord to snap back.
10. Allow the generator to run for several minutes before attempting to connect any electrical devices.

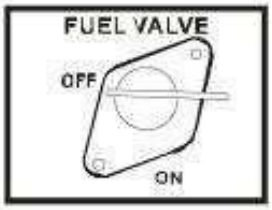

Figure A - Fuel Valve in the "OFF" position

Figure B - Connect the Hose

To LPG Supply

Figure C-Connect Valve

Figure D -Button on Presssure Release Valve

Figure F - Start with LPG(Liquid Propane Gas)

⚠ WARNING: WHEN USING THE GENERATOR WITH LPG

MAKE SURE THERE IS NO POSSIBLE IGNITION SOURCE CLOSE TO THE GENERATOR.

1. Before using, make sure all of the connectors and hoses are well connected and sealed.
2. Connect electrical devices to generator ONLY after the engine runs smoothly. (There may be remnant gasoline in the carburetor; this can cause unsteady engine performance for several minutes)
3. If the propane gas leaks, shut off the LPG supply first and then quickly unplug or turn off any electrical devices powered by the unit.
4. When stopping the engine, unplug or turn off any electrical devices and then turn off the LPG CLASP (see figure C). After the engine has stopped, turn the KEY to 'OFF" position, then shut off the LPG supply.

USING THE GENERATOR

Once you have allowed the engine to run for several minutes, you may connect electrical devices to the generator.

AC Usage

You may connect electrical devices running on AC current according to their wattage requirements. The chart in figure 9 shows the rated and surge wattage of your generator according to its model number.

The *rated wattage* corresponds to the maximum wattage the generator can output on a continuous basis.

The *surge wattage* corresponds to the maximum amount of power the generator can output for a short period of time. Many electrical devices such as refrigerators require short bursts of extra power, in addition the rated wattage listed by the device, to stop and start their motors.
The surge wattage ability of the generator covers this extra power requirement.

Model Number	Rated (Running) Wattage	Surge Wattage
XP4400	3500	4400
XP4400E	3500	4400

Figure 9-generator wattage by model number

The total running wattage requirement of the electrical devices connected to the generator should not exceed the rated wattage of the generator itself. To calculate the total wattage requirement of the electrical devices you wish to connect, find the rated (or running) wattage of each device. This number should be listed somewhere on the device or in its instruction manual.

If you cannot find this wattage, you may calculate it by multiplying the Voltage requirement by the Amperage drawn: Watts = Volts × Amperes. If these specifications are not available you may estimate the Watts required by your device by using the chart in *figure 10*.

Tool or Appliance	Rated (Running) Watts	Additional Surge Watts
Electric water heater (40 gal)	4000	0
Hot plate	2500	0
Saw-radial arm	2000	2000
Electric stove	1500	0
Saw-circular	1500	1500
Air compressor (1HP)	1500	3000
Window air conditioner	1200	1800
Saw-miter	1200	1800
Microwave	1000	2000
Well water pump	1000	1500
Reciprocating saw	960	1040
Sump pump	800	1200
Refrigerator freezer	800	1200
Furnace blower	800	1300
Computer	800	0
Electric drill	600	900
Television	500	0
Deep freezer	500	800
Garage door opener	480	600
Stereo	400	0
Box fan	300	600
Clock radio	300	0
Security system	180	0
DVD player/VCD	100	0
Common light bulb	75	0

Figure 10- Estimated wattage requirements of common electrical devices.

Once you have found the rated wattage requirement of each electrical device, add these numbers to find the total rated wattage you wish to draw from the generator. If this number exceeds the rated wattage of the generator, **DO NOT** connect all these devices. Select a combination of electrical devices, which has a total rated wattage lower than or equal to the rated wattage of the generator.

CAUTION - The generator can only run at its surge wattage capacity for a short time. Connect only electrical devices requiring a rated (running) wattage equal to or less than the rated wattage of the generator. Never connect devices requiring a rated wattage equal to the surge wattage of the generator.

NOTE: The above wattage figures are estimates only. Try to check the wattage listed on your electrical devices before consulting this chart.

Once you have determined what electrical devices you will be powering with the generator, connect these devices according to the following procedure:

1. Plug in each electrical device with the device turned off.
    a. NOTE: Be sure to attach appliances to the correct receptacle (outlet). Connect standard 120 Volt, single phase, 60 Hz loads only to the 120 Volt receptacles.
    b. Connect 120/240 Volt, single phase, 60Hz loads with NEMA L14-30 plug **only** to the 120/240 Volt receptacle See *Figure 11* for a depiction of each of these receptacles.
2. Switch the circuit breaker to the "ON" position.
3. Turn on the connected electrical devices in the order of the amount of power they require beginning with the device with the highest rated Wattage requirement.

⚠ **CAUTION: Do not connect 50Hz or 3-phase loads to the generator.**

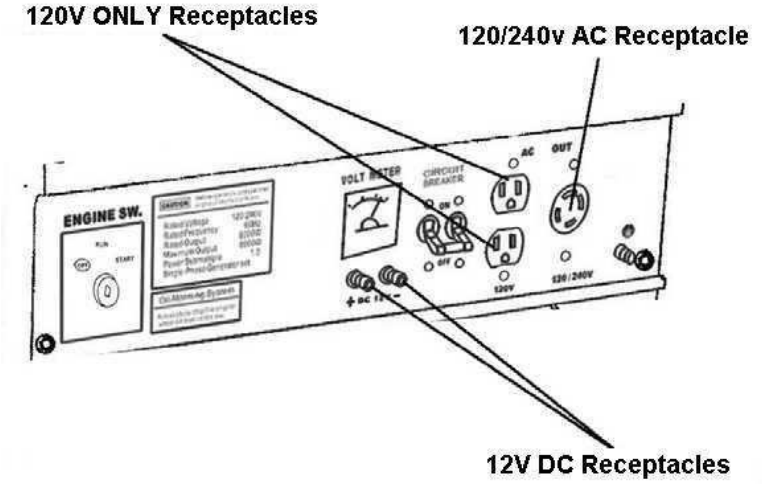

Figure 11- Receptacles available on the generator

VOLTAGE SELECTOR SWITCH

The voltage selector switches the dual 120v AC windings of the generator to produce "120V ONLY" or "120/240V". If a 240V appliance is connected to the 4-prong receptacle, the switch must be in the "120/240V" position. If only 120V appliances are being connected to the generator select the "120V ONLY" position to double the 120v amperage.

WARNING:

Only change the Voltage Selector Switch with the main AC circuit breaker OFF. The generator can be seriously damaged if the Voltage Selector Switch is changed with the breaker ON.

SOME NOTES ABOUT POWER CORDS

Long or thin cords can drain the power provided to an electrical device by the generator. When using such cords, allow for a slightly higher rated wattage requirement for the electrical device. See *Figure 12* for recommended cords based on the power requirement of the electrical device.

Device Requirements			Max. Cord Length (ft.) by Wire Gauge				
Amps	Watts (120V)	Watts (240V)	#8 wire	#10 wire	#12 wire	#14 wire	#16 wire
2.5	300	600	NR	1000	600	375	250
5	600	1200	NR	500	300	200	125
7.5	900	1800	NR	350	200	125	100
10	1200	2400	NR	250	150	100	50
15	1800	3600	NR	150	100	65	NR
20	2400	4800	175	125	75	50	NR
25	3000	6000	150	100	60	NR	NR
30	3600	7200	125	65	NR	NR	NR
40	4800	9600	90	NR	NR	NR	NR

*NR= not recommended

Figure 12 - Maximum Extension Cord Lengths by Power Requirement

DC Usage

⚠ **CAUTION: The DC receptacle is for recharging 12 Volt automotive-type batteries only. Do not connect any other device to this receptacle.**

⚠ **CAUTION: Never try to jump start a car with your generator.**

To connect 12 Volt batteries to the DC receptacle:

1. Connect one charging wire to the positive terminal on the battery and the other charging wire to the negative terminal on the battery.
2. Connect the free end of the positive wire to the positive receptacle (outlet) on the generator.
3. Start the generator.
4. Carefully connect the free end of the negative wire to the negative receptacle on the generator.
5. When disconnecting, always disconnect the wires from the generator first to avoid a spark.

⚠ **DANGER: Storage batteries emit highly explosive hydrogen gas when charged. Batteries also contain acid, which can cause severe chemical burns.**

- ⚠ **Do not allow open flames or cigarettes nearby for several minutes after charging a battery.**
- ⚠ **Always wear protective goggles and rubber gloves when charging a battery.**
- ⚠ **If battery acid gets on your skin, flush with water.**
- ⚠ **If battery acid gets in your eyes, flush with water and call a physician immediately.**
- ⚠ **If battery acid is swallowed, drink large quantities of milk and call a Physician immediately.**

If your generator is the electric start model, once running, it will charge the battery on the generator automatically. While charging, you can see the recharge indicator light lit, after the battery is full, the light will turn off.

STOPPING THE GENERATOR

To stop the generator:

1. Power down, and then unplug all connected electrical devices.
2. Switch the main AC circuit breaker to the "OFF" position.
3. Allow the generator to run for several more minutes with no electrical devices connected. (This helps stabilize the temperature of the generator.)
4. Turn the engine switch to the "OFF" position.
5. Turn the fuel valve to the "OFF" position.

⚠ **WARNING**: Allow the generator to cool for several minutes before touching areas that become hot during use.

⚠ **CAUTION**: Allowing gas to sit in the generator tank for long periods of time without use can make it difficult to start the generator in the future. Never store generator for extended periods of time with fuel in the tank.

MAINTENANCE /CARE

Proper routine maintenance of your generator will help prolong the life of your machine. Please perform maintenance checks and operations according the schedule in *figure 13*.

⚠ **CAUTION:** Never perform maintenance operations while the generator is running.

Recommended Maintenance schedule

		Each use	Every month or	Every 3 months or	Every 6 months or	Every year or
Engine oil	Check level	×				
	Replace		×			
Air cleaner	Check	×				
	Clean			×		
Fuel filter cup	Clean				×	
Spark plug	Check/clean				×	
Gas tank	Check gas level	×				
	Clean		×			×

Figure 13 - Recommended maintenance schedule

Cleaning the Generator

Always try to use your generator in a cool dry place. However, in the event your generator becomes dirty you may clean the exterior with one or more of the following:

- A damp cloth
- A soft brush

- A vacuum
- Pressurized air

⚠ **Never** clean your generator with a bucket of water or a hose. Water can get inside the working parts of the generator and cause a short circuit or corrosion.

Checking the Oil

The generator is equipped with an automatic shutoff to protect it from running on low oil. Nonetheless, you should check the oil level of the generator before each use to ensure that the generator crankcase has a sufficient amount.

To check the oil level:

1. Make sure the generator is on a level surface.
2. Unscrew the oil filler/dipstick cap (see *figure 14*).
3. With a dry cloth, wipe the oil off of the stick on the inside of the cap.
4. Insert the dipstick as if you were replacing the cap and then remove again. There should now be oil on the stick. If there is no oil on the stick, or oil only at the very end of the stick, you should add oil until the engine crankcase is filled. See "*Changing/ Adding Oil*" in this section.
5. Be sure to replace cap when you are finished checking the oil.

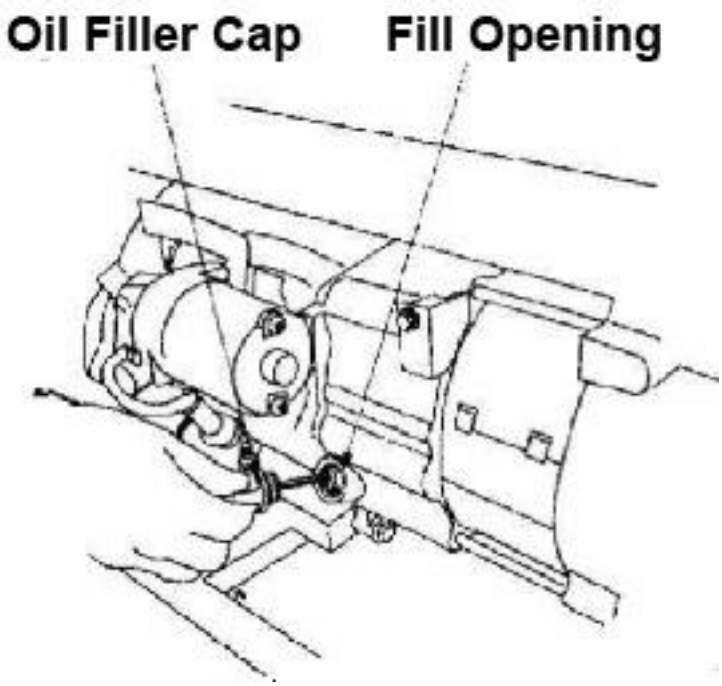

You should check the oil level of your generator according to the maintenance schedule in *figure 13*. When the oil level is low you will need to add oil until the level is sufficient to run the generator. The oil capacity of your generator engine is listed in *figure 15*.

Model number	**XP4400**	**XP4400E**
Engine oil capacity	20 fluid oz.	20 fluid oz.

Figure 15- Engine Oil Capacity.

It is only necessary to drain the oil from the crankcase, other than for regular oil changes if it has become contaminated with water or dirt. In this case, you can drain the oil from the generator according to the following steps:

1. Place an approved oil disposal container underneath the generator to catch oil as it drains.
2. Using a 10 mm hex wrench, unscrew the oil drain plug, which is located on the crankcase underneath the oil filler/dipstick cap (see *figure 16*). Allow all the oil to drain from the generator.
3. Replace the oil drain plug and tighten with a 10 mm hex wrench.

To add oil to the crankcase, follow these steps:

1. Make sure the generator is on a level surface.
2. Unscrew the oil filler/dipstick cap from the engine as shown in *figure 14* above.
3. Using a funnel, add motor oil to the crankcase. We recommend SAE 10W30 motor oil for general use. When full, the oil level should come close in the top of the oil fill opening (*see figure 17*).

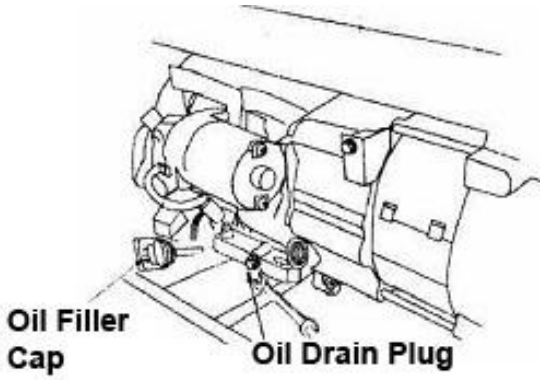

Figure 16: Draining Oil

Figure 17: Adding Oil

NOTE: Never dispose of used motor oil in the trash or down a drain. Please call your local recycling center or auto garage to arrange oil disposal.

Air Cleaner Maintenance

Routine maintenance of the air cleaner helps maintain proper airflow to the carburetor. Occasionally check that the air cleaner is free of excessive dirt.

1. Unhinge the clasps at the top and bottom of the air cleaner cover (see *figure 18*).
2. Remove the sponge-like elements from the casing.
3. Wipe the dirt from inside the empty air cleaner casing.
4. Wash the sponge-like elements in household dish detergent and warm water.
5. Allow the elements to dry completely.
6. Soak the dry elements in a small amount of engine oil. Ring out any excess oil.
7. Replace the sponge-like elements in the air cleaner casing and replace the cover.

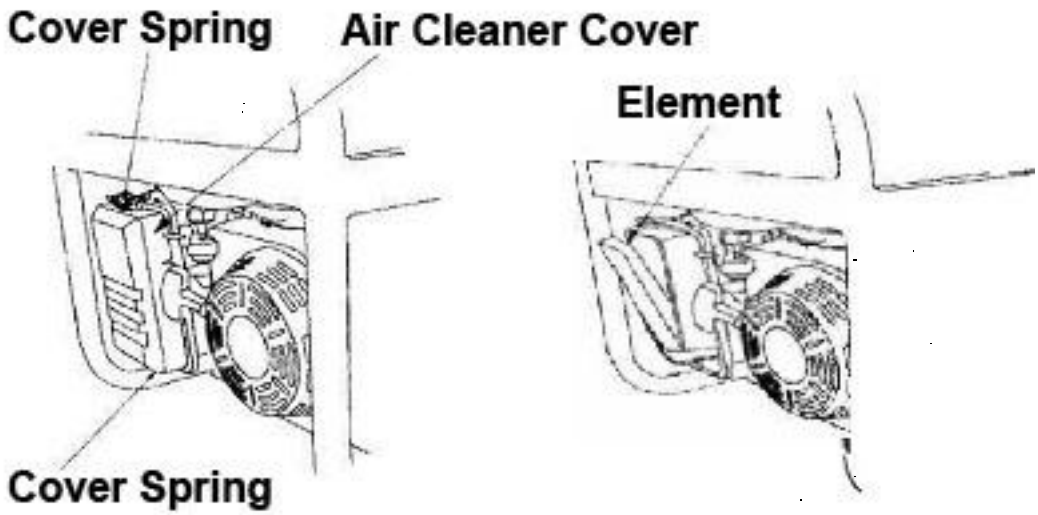

Figure 18 – Removing the air cleaner casing.

Fuel Filter Cup Cleaning

The fuel filter cup is a small well underneath the fuel valve. It helps to trap dirt and water that may be in your fuel tank before it can enter the engine.

To clean the fuel filter cup:

1. Turn the fuel valve to the "OFF" position.
2. Unscrew the fuel filter cup from the fuel valve using a wrench. Turn the valve toward you to unscrew (*see figure 19*).
3. Clean the cup of all sediment using a rag or brush.
4. Reinstall the fuel filter cup.

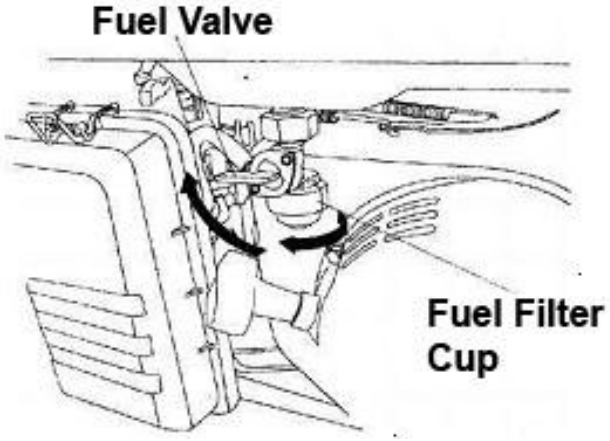

Figure 19 –Removing the Fuel Filter Cup

Spark Plug Maintenance

The spark plug is important for proper engine operation. A good spark plug should be intact, free of deposits, and properly gapped.

To inspect you spark plug:

1. Pull on the spark plug cap to remove it.
2. Unscrew the spark plug from the generator using the spark plug wrench included with this product (see *figure 20*).
3. Visually inspect the spark plug. If it is cracked or chipped, discard and replace with a new spark plug. We recommend using a F6RTC spark plug such as NGK BPR5ES.
4. Measure the plug gap with a gauge (see *figure 21*). The gap should be 0.7-0.8 mm (0.028-0.031 in).
5. If you are re-using the spark plug, use a wire brush to clean any dirt from around the spark plug base and then re-gap the spark plug.

6. Screw the spark plug back into its place on the generator using the spark plug wrench.
7. Replace the spark plug cap.

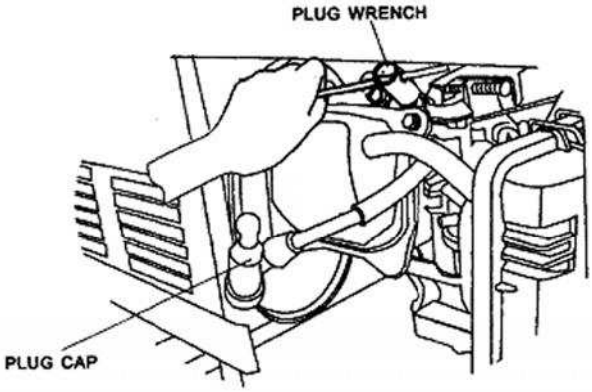

Figure 20- Removing the spark plug

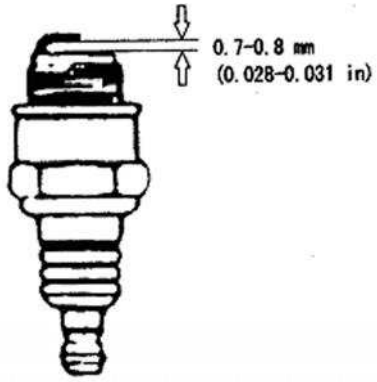

Figure 21- Measuring the spark plug gap

Emptying the Gas Tank

Before storing your generator for extended periods of time, you should drain your generator of gasoline.

To drain the generator of gas:

1. Turn the fuel valve to the "OFF" position.
2. Remove the fuel filter cup (see "*Removing the Fuel Filter Cup*" earlier in this section.
3. Empty the fuel filter cup of any fuel.
4. With a receptacle underneath the generator to catch the gas, turn the fuel valve to the "ON" position. Drain all the gas from the generator.
5. Turn the fuel valve to the "OFF" position.
6. Replace the fuel filter cup.
7. Store the emptied gasoline in a suitable place.

⚠**CAUTION: Do not store fuel from one season to another.**

STORAGE/TRANSPORT PROCEDURES

⚠ **Caution: Never place any type of storage cover on the generator while it is still hot.**

When transporting or storing your generator for extended periods of time:

- Empty the gas tank (see "*Emptying the Gas Tank*" in the "*Maintenance*" section).
- Disconnect the spark plug.
- Do not obstruct any ventilation openings.
- Keep the generator in a cool dry area.

GENERATOR SPECIFICATIONS

AC Output

	XP4400H	XP4400EH
Rated Wattage	3500W	3500W
Surge Wattage	4400W	4400W
Rated Voltage	120/240V	120/240V
Rated Frequency	60Hz	60Hz
Phase	Single	Single

DC Output

	XP4400H	XP4400EH
Voltage	12V	12V
Amperage	8.3A	8.3A
Dimensions (in):	Length=23.2 Width=17 Height=17	Length=23.2 Width=17 Height=17

Engine

	XP4400H	XP4400EH
Engine type	4-stroke OHV single cylinder with forced air cooling system	
Ignition system	Non-contact transistor	
Displacement	200cc	
Starting type	Recoil	Electric
Fuel tank capacity:	15L(3.96US gal.)	
Oil capacity	0.6L(20fl oz.)	
Run time on 50% load	14hrs	12 hrs
Noise Level	< 69dB	

TROUBLESHOOTING

Problem	Cause	Solution
Engine will not start	Engine switch is set to “OFF”.	Set engine switch to “ON”.
	Fuel valve is turned to “CLOSED”.	Turn fuel valve to “OPEN” position.
	Choke is open.	Close the choke
	Engine is out of gas.	Add gas.
	Engine is filled with contaminated or old gas	Change the gas on the engine.
Engine will	Spark plug is dirty.	Clean spark plug.
not start (continued from page 19)	Spark plug is broken.	Replace spark plug.
	Generator is not on level surface.	Move generator to a level surface to prevent low oil shutdown from triggering.
	Oil is low	Add or replace oil.
Engine runs but there is no electrical output	Circuit breaker is off.	Set the circuit breaker to the “ON” position.
	Bad connecting wires/cables.	If you are using an extension cord, try a different one.
	Bad electrical device connected to generator.	Try connecting a different device.
Generator runs but does not support all electrical devices connected.	Generator is overloaded	Try connecting fewer electrical loads to the generator.
	Shorten one of the connected devices.	Try disconnecting any faulty or short-circuited electrical loads.
	Air cleaner is dirty.	Clean or replace air cleaner.

GENERATOR ASSEMBLY AND MOUNTING

Generator is supplied with a wheel kit. If you want to install the wheel kit on your unit, please follow the instructions below. If you will not be using the wheel kit, skip this section.

1. Place the bottom of the generator cradle on a flat, even surface. Temporarily place unit on blocks to ease assembly.
2. Secure the support leg to the cradle with cap screws (M8 x 16) and lock nuts (M8) (see *figure 22*).
3. Secure the axle to the cradle with cap screws (M8 x 16) and lock nuts (M8) (see *figure 23*).
4. Slide a wheel over the axle, then secure the wheel with a retaining pin. (see *figure 24,Figure 25, Figure 26*).
5. Position the handles on the cradle and attach, cap screws (M8 x 16) and lock nuts (M8) (*Figure 27,Figure 28*).
6. Check that all fasteners are tight.

Figure 22

Figure 23

Figure 24

Figure 25

Figure 26

Figure 27

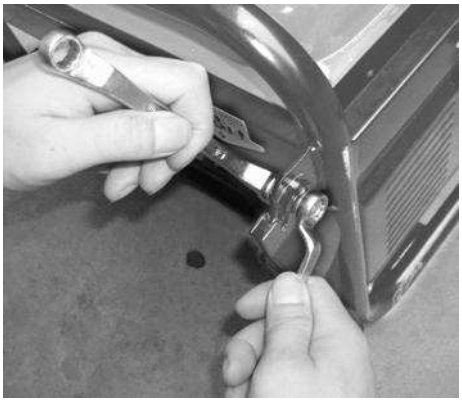
Figure 28

CHANGE THE CARBON-BRUSH

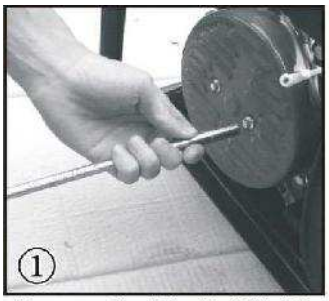

Remove the 2 bolts (M5x12) on the generator back-cover

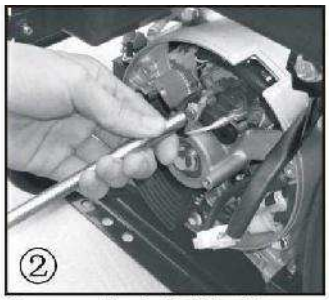

Remove the bolt (M5x16) holding the carbon brush.

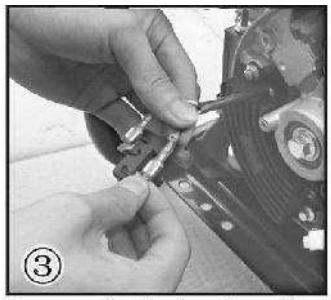

Remove the 2 wires from the AVR on the carbon brush.

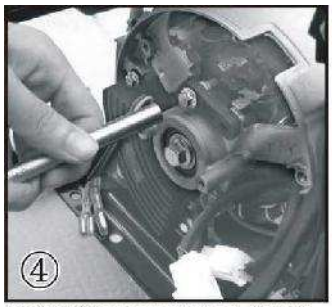

Install the new carbon brush with bolt (M5x16)

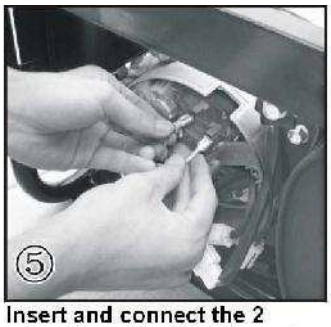

Insert and connect the 2 wires from the AVR, be sure to connect + and - correctly.

Replace the back cover of the generator and secure with the 2 bolts (M5x12)

CHANGE THE AVR

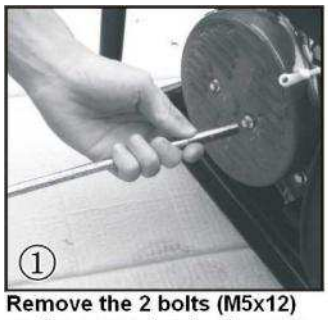

Remove the 2 bolts (M5x12) on the generator back cover.

Remove the 2 bolts (M5x16) holding the AVR.

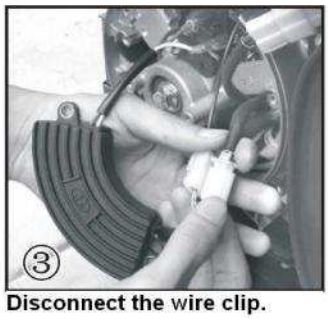

Disconnect the wire clip.

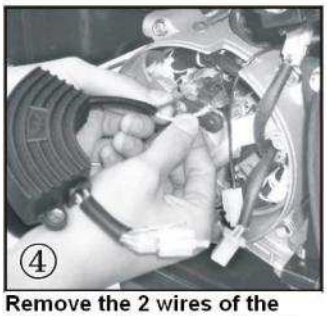

Remove the 2 wires of the AVR from the carbon brush.

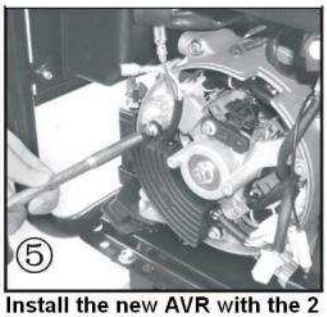

Install the new AVR with the 2 bolts (M5x16).

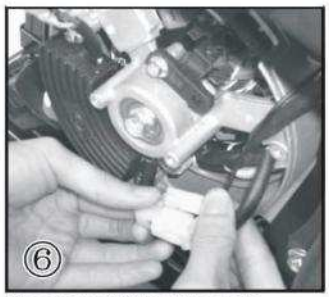

Reconnect the wire clip.

Connect the 2 wires to the carbon brush, be sure to connect the + and - correctly.

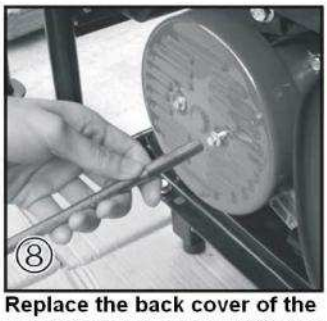

Replace the back cover of the generator and secure with the 2 bolts (M5x12).

WIRING DIAGRAM (XP4400H)

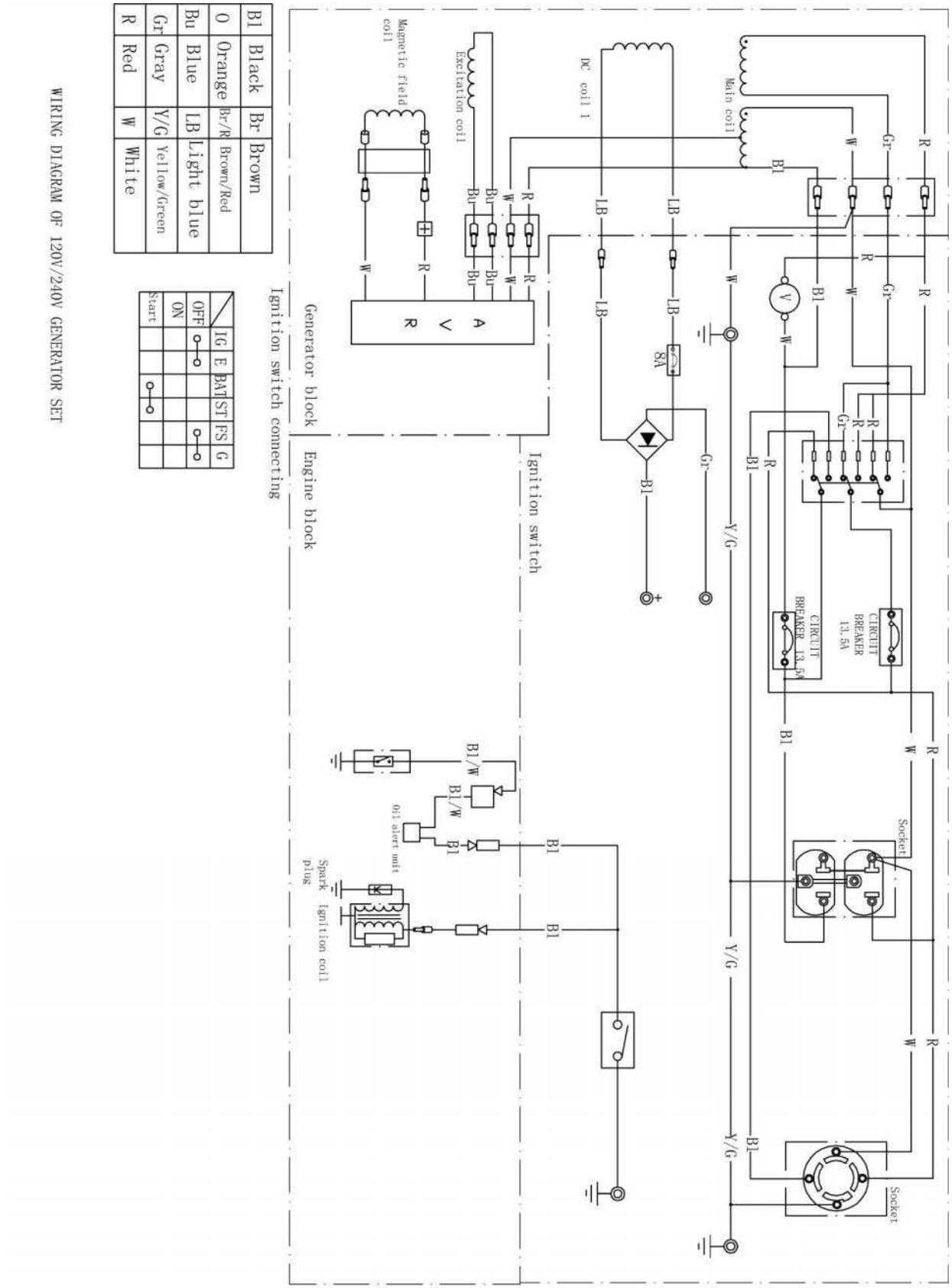

WIRING DIAGRAM (XP4400EH)

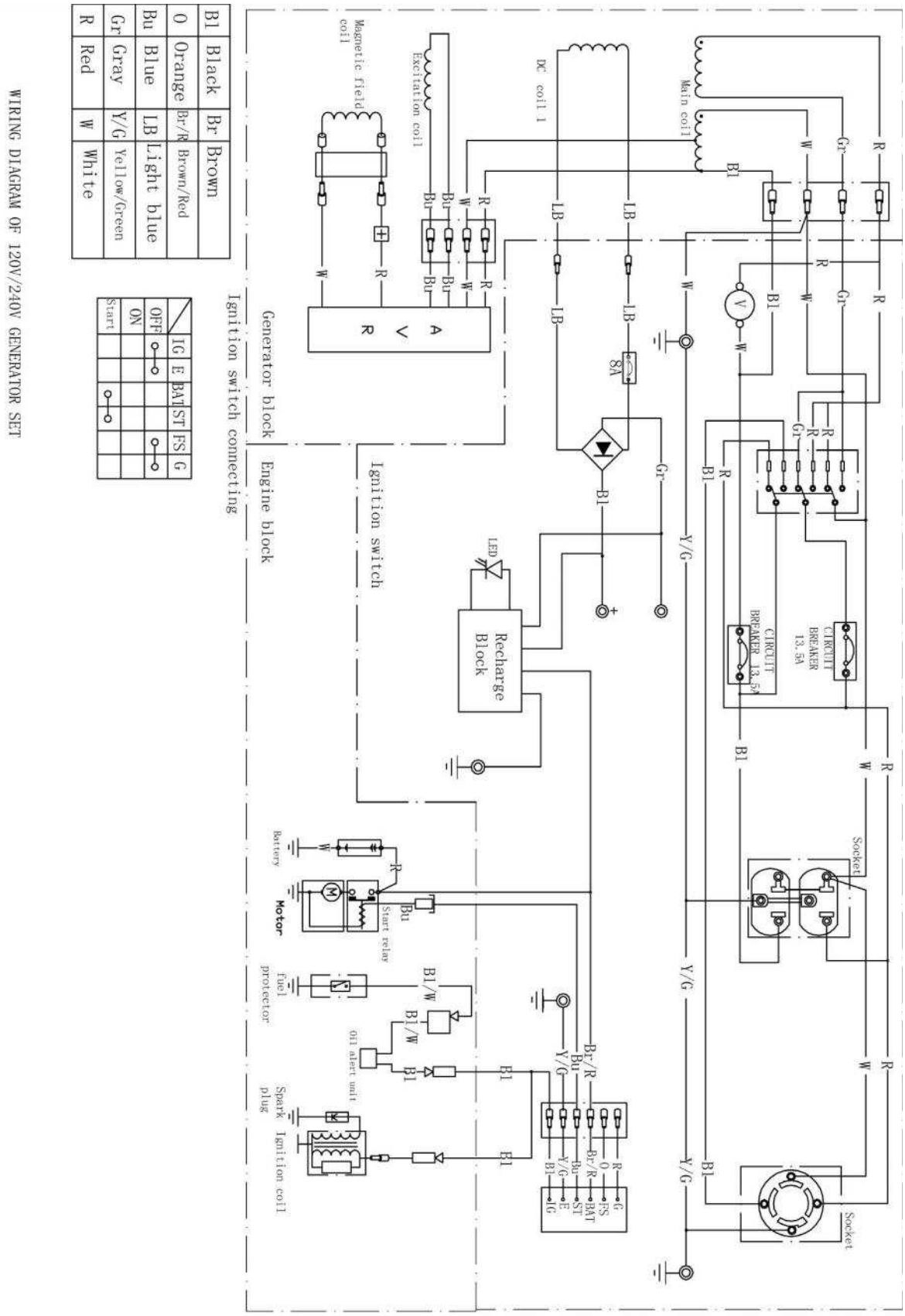

XP4400E ENGINE EXPLODED

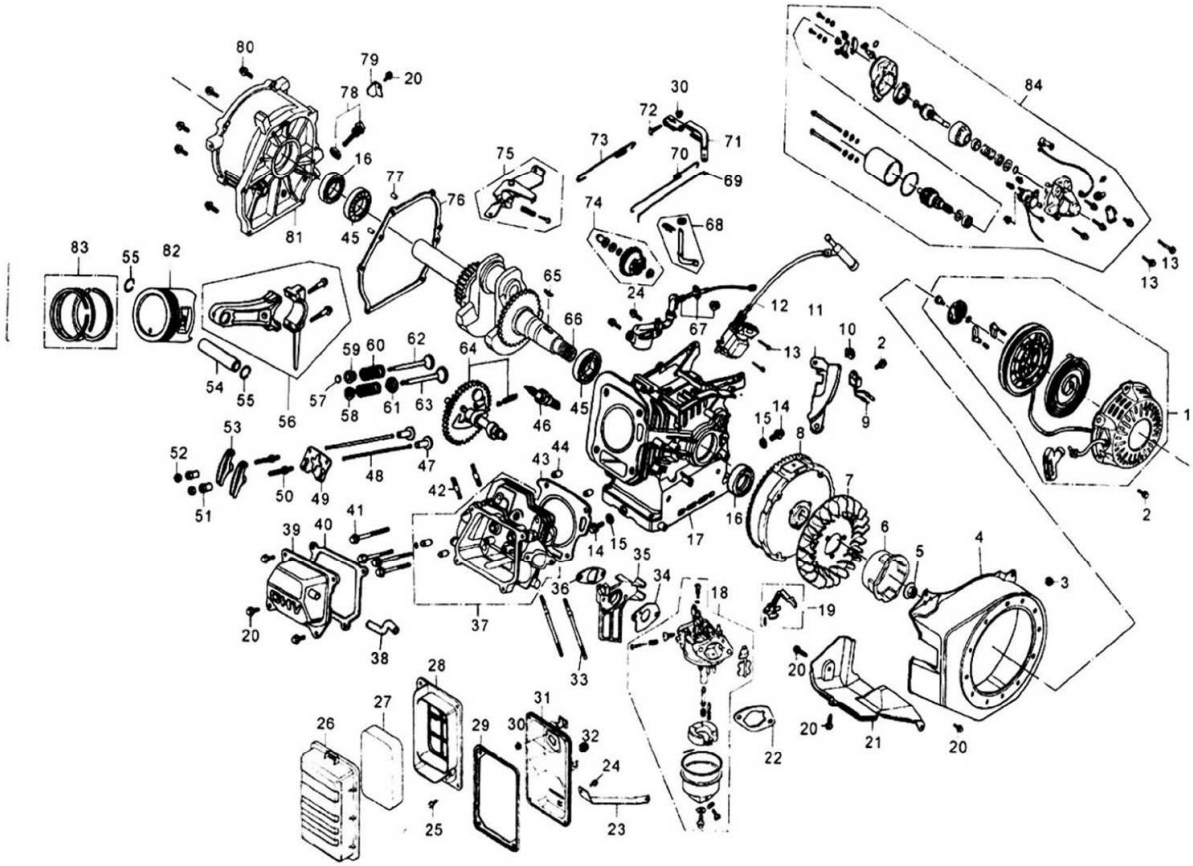

PARTS LIST

Part No.	Article Name	Qty	Cross Reference	Reference No.
1	Recoiler COMP	1	DJ168F-16121-K	XP4400E-1
2	Flange Bolt.M6*8	4	GBT5787-B6-8	XP4400E-2
3	Grommet Drain Hole	1	DJ168F-16118	XP4400E-3
4	Covering Fan COMP	1	DJ170N-16121-A	XP4400E-4
5	Flange, Nut M14	1	GBT6177/10-N-14	XP4400E-5
6	Starting Pulley	1	DJ168F-16000-A	XP4400E-6
7	Cooling Fan	1	DJ168F-16002-A	XP4400E-7
8	Flywheel COMP	1	DJ168F-16200-I	XP4400E-8
9	Oil Blocker	1	DJ168F-18300-A	XP4400E-9
10	**Clip, Oil blocker**	**1**	****SEE REF NO.**	**XP4400E-10**
11	Side Plate	1	DJ170S-11400-A	XP4400E-11
12	Coil ASSY, Ignition	1	DJ168F-18100-C	XP4400E-12
13	Flange Bolt M6*25	2	GBT5787-B6-25	XP4400E-13
14	Bolt, Drain plug	2	DJ168F-11004-A	XP4400E-14
15	Washer, Drain plug	2	DJ168F-11005-A	XP4400E-15
16	Oil seal, 25*41*6	2	DJ168F-11014-A	XP4400E-16
17	Crank Case ASSY	1	DJ170F-11100-C	XP4400E-17
18	**LPG Carburetor ASSY**	**1**	**DJ170FD-14100-C**	**XP4400E-18**
19	Lever COMP, Choke	1	DJ168F-14119	XP4400E-19
20	Flange Bolt M6*12	11	GBT5787-B6-16	XP4400E-20
21	Shroud COMP	1	DJ168F-11012-A	XP4400E-21
22	Gasket, Carburetor to Air cleaner	1	DJ168F-14027-A	XP4400E-22
23	Stay, Air cleaner	1	DF2500H-14205-A	XP4400E-23
24	Flange Bolt M6*12	3	GBT5787-B6-12	XP4400E-24
25	Bolt,M5*12	4	GBT5787-B5-14	XP4400E-25
26	Cover COMP, Air cleaner	1	DJ168F-14204	XP4400E-26
27	Element, Air cleaner	1	DJ170F-14201	XP4400E-27
28	Seperator, Air cleaner	1	DJ168F-14202	XP4400E-28
29	Seal, air cleaner	1	DJ168F-14206	XP4400E-29
30	Flange nut M6	2	GBT6177-N-6	XP4400E-30
31	Case COMP, air cleaner	1	DJ168F-14205-A	XP4400E-31
32	Grommet Fender	1	DJ168F-14014-A	XP4400E-32
33	Bolt Head, 6*94	2	DJ168FD-14001-A	XP4400E-33
34	Gasket,Carburetor	1	DJ168F-14005-A	XP4400E-34
35	Heat Isolator,Carburetor	1	DJ168F-14004-A	XP4400E-35
36	Packing, Heat isolator	1	DJ168F-14003-B	XP4400E-36
37	Cylinder Head COMP	1	DJ170F-11200-B	XP4400E-37
38	Breather	1	DJ168FD-11013-A	XP4400E-38
39	Cover COMP, Cylinder head	1	DJ168F-11300-C	XP4400E-39
40	Gasket,Cylinder head	1	DJ168F-11011-A	XP4400E-40
41	Flange Bolt M8*60	4	GBT5787-B8-60	XP4400E-41
42	Bolt Head, M8*32	2	DJ168F-14002-A	XP4400E-42
43	Gasket,Cylinder head	1	DJ170F-11010-C	XP4400E-43
44	Pin,Dowel 10*16	2	DJ168F-11009-A	XP4400E-44
45	Radial Ball Bearing(6025)	2	GB276-89-6205	XP4400E-45

Part No.	Article Name	Qty	Cross Reference	Reference No.
46	Spark Plug	1	DJ168F-18500-A	XP4400E-46
47	Valve Lifter	2	DJ170F-13009-A	XP4400E-47
48	Push Rod	2	DJ170F-13008-B	XP4400E-48
49	Plate,Push rod guide	1	DJ168F-13300-A	XP4400E-49
50	Bolt,Pivot	2	DJ168F-13202-A	XP4400E-50
51	Nut,Valve rocker am	2	DJ168F-13203-A	XP4400E-51
52	Nut, Pivot Adjust	2	DJ168F-13204-A	XP4400E-52
53	Valve Rocker Am	2	DJ168F-413201-A	XP4400E-53
54	Piston Pin	1	DJ170F-12002-A	XP4400E-54
55	Clip, Piston pin	2	DJ168F-12003-A	XP4400E-55
56	Connecting Rod ASSY	1	DJ170F-12200-B	XP4400E-56
57	Valve Rocker	1	DJ168F-13006-A	XP4400E-57
58	Retainer,Intake Valve spring	1	DJ168F-13004-A	XP4400E-58
59	Retainer,EX.Valve spring	1	DJ168F-13005-A	XP4400E-59
60	Valve Spring	2	DJ168F-13003-A	XP4400E-60
61	Valve Spring Seat	1	DJ168F-13010-A	XP4400E-61
62	Valve Exhaust	1	DJ168F-13001-A	XP4400E-62
63	Valve,Intake	1	DJ168F-13002-A	XP4400E-63
64	Camshaft	1	DJ168F-13100-B	XP4400E-64
65	Key,25*18	1	DJ168F-12104	XP4400E-65
66	Crankshaft	1	DJ168F-12100-BB	XP4400E-66
67	Switch ASSY, Oil level	1	DJ168F-18200-A	XP4400E-67
68	Governor Shaft	1	DJ168F-15001-A	XP4400E-68
69	Rod,Governor arm	1	DJ168F-15006-A	XP4400E-69
70	Spring, Throttle return	1	DJ170F-15008-A	XP4400E-70
71	Governor Arm	1	DJ168F-15004-A	XP4400E-71
72	Bolt, Governor arm	1	DJ168F-15005-A	XP4400E-72
73	Governor Spring	1	DJ170F-15007-A	XP4400E-73
74	Governor ASSY	1	DJ168F-15100-A	XP4400E-74
75	Control ASSY	1	DJ168FD-15200-A	XP4400E-75
76	Packing, Case cover	1	DJ170F-11003-B	XP4400E-76
77	Pin,Dowel 8*14	2	DJ168F-11002-F	XP4400E-77
78	Cap, Oil filler	1	DJ168F-11007-A	XP4400E-78
79	Plat	1	DF1800H-33016-A	XP4400E-79
80	Flange Bolt M8*32	6	GBT5787-B8-35	XP4400E-80
81	Crankcase Cover	1	DJ168FD-11001-C	XP4400E-81
82	Piston	1	DJ170F-12001-B	XP4400E-82
83	Piston Ring Set	1	DJ170F-12300-A	XP4400E-83
84	Start Motor	1	DJ168F-18600-A	XP4400E-84

XP4400E OTHERS EXPLODED

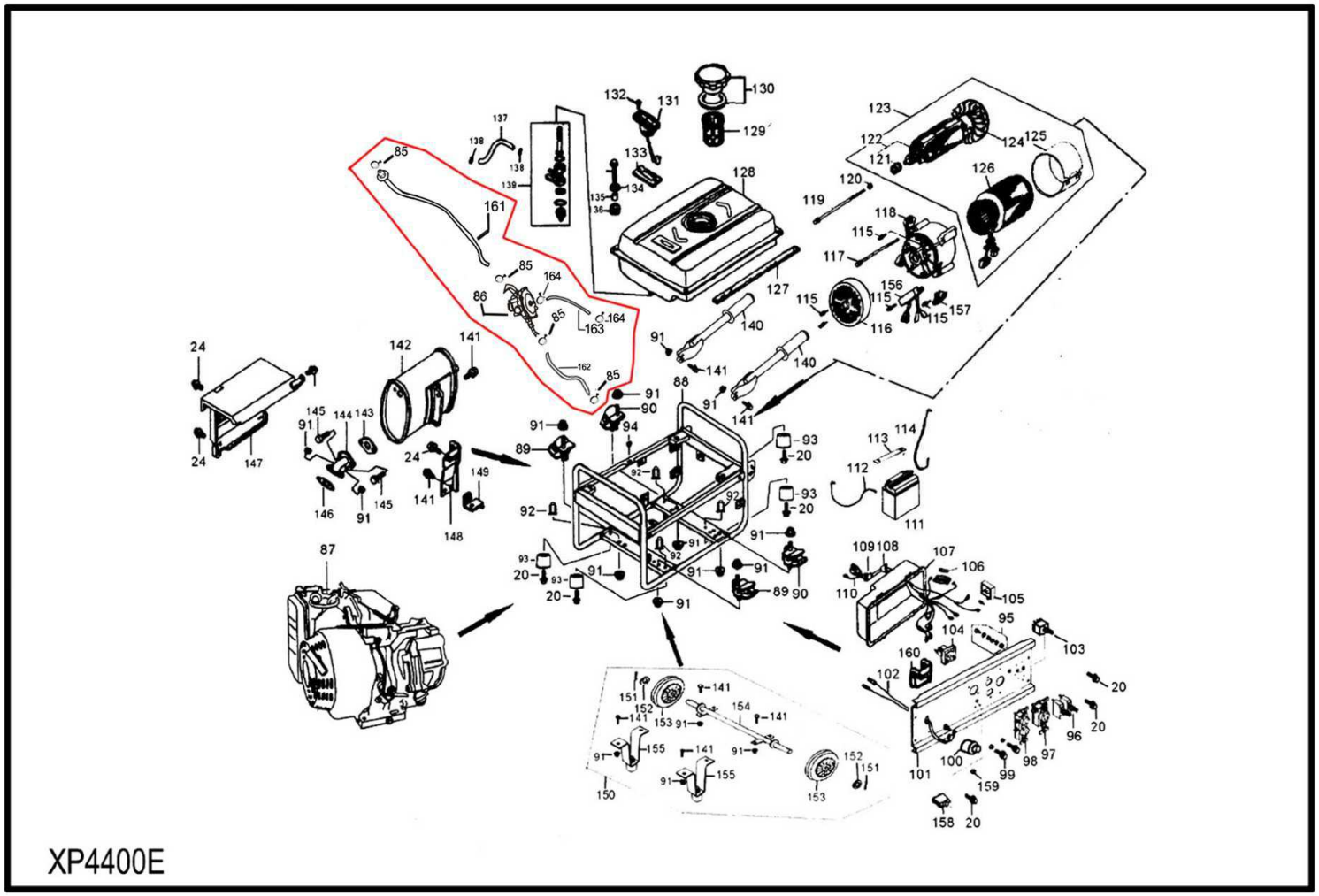

PARTS LIST

Part No.	Article Name	Qty	Cross Reference	Reference No.
85	**Clip, Tube**	**4**	****SEE REF NO.**	**XP4400E-85**
86	**Pressure Release Valve**	**1**	****SEE REF NO.**	**XP4400E-86**
87	Gasoline engine,Whole set	1	DJ170FD-BD	XP4400E-87
88	Frame COMP	1	XP4400E-31100-B	XP4400E-88
89	Bottom Rubber A	2	DF2500H-31201-A	XP4400E-89
90	Bottom Rubber B	2	DF2500H-31202-A	XP4400E-90
91	Flange Nut M8	18	DBT6177-N-8	XP4400E-91
92	Flange Nut M6	4	GBT889-N-8	XP4400E-92
93	**Cushion.Frame**	**4**	****SEE REF NO.**	**XP4400E-93**
94	Rubber Pad, Frame	2	DF2500H-14304-A	XP4400E-94
95	Earth Terminal Set	1	34107	XP4400E-95
96	Circuit Breaker	1	34206-100	XP4400E-96
97	Receptacle (30A)	1	34204-003	XP4400E-97
98	Receptacle (20A)	2	34204-005	XP4400E-98
99	DC Output Post	2	34204-038	XP4400E-99
100	Engine Switch	1	34203-002	XP4400E-100
101	Control Panel	1	XP4400E-34101-A	XP4400E-101
102	Sub Hamess	1	34213-002	XP4400E-102
103	Voltage Option Switch	1	34202-006	XP4400E-103
104	Voltage Meter	1	34205-001	XP4400E-104
105	Diode ASSY	1	34210-001	XP4400E-105
106	**Fuse**	**1**	****SEE REF NO.**	**XP4400E-106**
107	Cortrol Panel Case	1	34102-A	XP4400E-107
108	Boot, Main Wire Hamess	1	34109	XP4400E-108
109	Boot, AC Output Wire	1	34117	XP4400E-109
110	Wire Harness ASSY	1	34212-001	XP4400E-110
111	Battery	1	31300-001	XP4400E-111
112	Positive Wire.Battery	1	31038-001	XP4400E-112
113	Battery Cover	1	DF1800H-31033-A	XP4400E-113
114	Negative Wire,Battery	1	31040-001	XP4400E-114
115	Flange Bott M5*12	2	GBT5789-B5-16	XP4400E-115
116	Alternator Cover	1	DF1800H-33006-B	XP4400E-116
117	Flange Bolt M6*125	4	DF3500H-33015-A	XP4400E-117
118	Supporting Stand	1	DF1800H-33005-A	XP4400E-118
119	Bolt M8*180	1	DF3500H-33003-A	XP4400E-119
120	Plain Washerφl0	1	GBT93-LW-8	XP4400E-120
121	Bearing 6204-2RS	1	GB276-89-6204	XP4400E-121
122	Rotator COMP	1	DF3500H-33110-B	XP4400E-122
123	Stator & Rotator ASSY	1	DF3000H33103-B-23602	XP4400E-123
124	Generator Fan	1	DF2500H-33023	XP4400E-124
125	Stator Cover	1	DF3500H-33129	XP4400E-125
126	Stator ASSY	1	DF3500H-33120	XP4400E-126
127	Stripe, Fuel Tank	1	DF2500H-14322-D	XP4400E-127
128	Fuel Tank	1	DF2500H-14300-B	XP4400E-128
129	Fuel Filter	1	14307	XP4400E-129

PartNo.	Article Name	Qty	Cross Reference	Reference No.
130	Cap	1	14306	XP4400E-130
131	Fuel Sensor	1	14303	XP4400E-131
132	Screw M5*10	2	GBT819-B-5	XP4400E-132
133	Gasket, Fuel Tank	1	14313	XP4400E-133
134	Washer	4	14311	XP4400E-134
135	Collar	4	14305	XP4400E-135
136	Cushion	4	14304	XP4400E-136
137	Outlet Pipe φ4.5*165	1	DF168FD-14007-C	XP4400E-137
138	Tube Clip	2	DJ168F-14008-A	XP4400E-138
139	Fuel Cock	1	DF2500H-14302-A	XP4400E-139
140	Handles	2	DF63800H-31058-C	XP4400E-140
141	Flange Bolt M8*16	17	GBT889-N-8X20	XP4400E-141
142	Muffler	1	DF2500H-14400-E	XP4400E-142
143	Muffler Gasket	1	DJ168F-14006-A	XP4400E-143
144	Exhaust Pipe COMP	1	DJF2500H-14009	XP4400E-144
145	Flange Bolt M8*25	2	GB5787-B-6	XP4400E-145
146	Exhaust Pipe Gasket	1	DJ188F-14010-A	XP4400E-146
147	Muffler Guard	1	DF2500H-14018-B	XP4400E-147
148	**Muffler Stay**	**1**	****SEE REF NO.**	**XP4400E-148**
149	**Supporting Plate**	**1**	****SEE REF NO.**	**XP4400E-149**
150	Wheel ASSY	1	XP4400E-WK	XP4400E-150
151	Pin	2	DF2500H-31019-B	XP4400E-151
152	**Washer φ20**	**2**	****SEE REF NO.**	**XP4400E-152**
153	Wheel COMP	2	31017-F	XP4400E-153
154	Well Shaft	1	DF3000H-31018-F	XP4400E-154
155	Bracket	2	DF3000H-31070-E	XP4400E-155
156	Voltage Regulator	1	DF2500H-33011-A	XP4400E-156
157	Brush ASSY	1	DF3500H-33001	XP4400E-157
158	Circuit Protector (10A)	1	34208-004	XP4400E-158
159	**Recharge Indicator**	**1**	****SEE REF NO.**	**XP4400E-159**
160	OC 12V Voltage Regulator	1	34224-001	XP4400E-160
161	**Gas tube**	**1**	****SEE REF NO.**	**XP4400E-161**
162	**Intake tube, carburetor**	**1**	****SEE REF NO.**	**XP4400E-162**
163	**Pressure tube**	**1**	****SEE REF NO.**	**XP4400E-163**
164	**Clipφ8**	**2**	****SEE REF NO.**	**XP4400E-164**