UNITED STATES PATENT AND TRADEMARK OFFICE

BEFORE THE PATENT TRIAL AND APPEAL BOARD

SAMSUNG ELECTRONICS CO., LTD.

Petitioner,

v.

ADVANCED CODING TECHNOLOGIES, LLC

Patent Owner.

Patent No. 10,218,995
Filing Date: April 21, 2015
Issue Date: February 26, 2019

Inventor: Satoru Sakazume
Title: MOVING PICTURE ENCODING SYSTEM, MOVING PICTURE ENCODING METHOD, MOVING PICTURE ENCODING PROGRAM, MOVING PICTURE DECODING SYSTEM, MOVING PICTURE DECODING METHOD, MOVING PICTURE DECODING PROGRAM, MOVING PICTURE REENCODING SYSTEM, MOVING PICTURE REENCODING METHOD, MOVING PICTURE REENCODING PROGRAM

PATENT OWNER'S PRELIMINARY RESPONSE

Case No. IPR2024-00372

Google
Exhibit 1101
Google v. Advanced Coding
IPR2025-01278

TABLE OF CONTENTS

Page(s)

I. INTRODUCTION 1

II. THE ’995 PATENT 4

III. THE ALLEGED PRIOR ART 6

A. Phek 6

B. Segall 7

C. Martins 8

D. He 10

IV. CLAIM CONSTRUCTION 13

V. LEVEL OF ORDINARY SKILL IN THE ART 13

VI. PETITIONER HAS NOT DEMONSTRATED A REASONABLE LIKELIHOOD OF SUCCESS FOR THE GROUNDS ADVANCED IN THE PETITION, AND THE PETITION SHOULD BE DENIED 13

A. Claim 2 Is Not Obvious Over Phek In View of Segall, Martins, and He 15

1. The Petition Does Not Show that Phek In View of Segall, Martins, and He Discloses "*a first resolution converter configured to acquire the sequence of super-resolution enlarged decoded pictures created at the first super-resolution enlarger to work on the sequence of super-resolution enlarged decoded pictures to implement a process for a prescribed resolution conversion to create a sequence of super-resolution decoded pictures with a standard resolution*," as Required by Claim Element [2.4] 15

2. The Petition Does Not Show that Phek In View of Segall, Martins, and He Discloses "*a second decoder configured to acquire the second sequence of encoded bits obtained with a standard resolution at the demultiplexer as a set of decoding targets, the sequence of decoded pictures created with the standard resolution at the first decoder as a set of first reference pictures, and the sequence of super-resolution decoded pictures created with the standard resolution at the first resolution converter as a set of second reference pictures*," as Required by Claim Element [2.5.i] 20

3. The Petition Does Not Show that Phek In View of Segall, Martins, and He Discloses "*select one of the set of first reference pictures and the set of second reference pictures based on reference picture selection information to implement a combination of processes for a prescribed prediction and a prescribed second decoding being a decoding with an extension of the standard resolution, to create a sequence of super-resolution pictures decoded with the standard resolution based on the set of decoding targets and the set of selected reference pictures*," as Required by Claim Element [2.5.ii] 21

4. The Petition Does Not Show that Phek In View of Segall, Martins, and He Discloses "*a second resolution converter configured to acquire the sequence of decoded pictures with the standard resolution from the first decoder to work on the sequence of decoded pictures to implement an interpolation of pixels with the second enlargement to create a sequence of enlarged decoded pictures with a high resolution as a second resolution higher than the standard resolution*," as Required by Claim Element [2.6] 26

5. The Petition Does Not Show that Phek In View of Segall, Martins, and He Discloses "*wherein the set of decoding targets, the set of first reference pictures, and the set of second reference pictures have the same value in spatial resolution*," as Required by Claim Element [2.7] 28

B. Claims 3-4 and 11 Are Not Obvious Over Phek In View of Segall, Martins, and He 29

VII. THE PETITION SHOULD BE DENIED IN THE DISCRETION OF THE DIRECTOR UNDER 35 U.S.C. § 314(a) 30

A. The Parallel District Court Litigation and the Petition Involve the Same Parties 32

B. The District Court Litigation Involves Substantially the Same Claims 32

C. Proximity of the District Court's Trial Date 33

D. Significant Investment and Petitioner's Delay in Filing the Petition 34

E. No Stay of the Parallel District Court Litigation 35

F. Other Factors Favor Discretionary Denial 36

VIII. CONCLUSION 37

TABLE OF AUTHORITIES

Page(s)

Cases

Apple Inc. v. Fintiv, Inc.,
IPR2020-00019, Paper 11 (P.T.A.B. Mar. 20, 2020) 30

Apple, Inc. v. Contentguard Holdings, Inc.,
IPR2015-00355, Paper 9 (P.T.A.B. June 26, 2015) 14

Broadcom Corp. v. Emulex Corp.,
732 F.3d 1325 (Fed. Cir. 2013) 15

Cisco Sys., Inc. v. Ramot at Tel Aviv Univ. Ltd.,
IPR2020-00122, Paper 15 (P.T.A.B. May 15, 2020) 32, 34

Edward LifeSciences Corp. v. Evalve, Inc.,
IPR2019-01479, Paper 7 (P.T.A.B. Feb. 26, 2020).....33

Graham v. John Deere Co. of Kansas City,
383 U.S. 1 (1966).....13

Innogenetics, N.V. v. Abbott Lab'ys.,
512 F.3d 1363 (Fed. Cir. 2008) 15

Intell. Ventures II v. FedEx Corp.,
No. 2:16-cv-00980-JRG, Dkt. 141 (E.D. Tex. Oct. 24, 2017) 35, 36

Intelligent Bio-Sys., Inc. v. Illumina Cambridge Ltd.,
821 F.3d 1359 (Fed. Cir. 2016) 14

KSR Int'l Co. v. Teleflex Inc.,
550 U.S. 398 (2007).....13

Lennon Image Techs., LLC v. Macy's Retail Holdings, Inc.,
2:13-CV-00235-JRG, 2014 WL 4652117 (E.D. Tex. Sept. 18,
2014) 35

Los Angeles Biomedical Rsch. Inst. at Harbor-UCLA Med. Ctr. v. Eli Lilly & Co.,
849 F.3d 1049 (Fed. Cir. 2017) 14

Next Caller Inc. v. TrustID, Inc.,
IPR2019-00961, -00962.....34

NHK Spring Co. v. Intri-Plex Techs., Inc.,
IPR2018-00752, Paper 8 (P.T.A.B. Sept. 12, 2018).....32

Pers. Web Techs., LLC v. Apple, Inc.,
848 F.3d 987 (Fed. Cir. 2017) 14

Samsung Elecs. Am., Inc. v. Uniloc 2017 LLC,
IPR2019-01218, Paper 7 (P.T.A.B. Jan. 7, 2020) 34

Stratoflex, Inc. v. Aeroquip Corp.,
713 F.2d 1530 (Fed. Cir. 1983) 13

Supercell Oy v. Gree, Inc.,
IPR2020-00513, Paper 11 (P.T.A.B. June 24, 2020) 33

In re Van Os,
844 F.3d 1359 (Fed. Cir. 2017) 15

Statutes

35 U.S.C. § 314(a) 4, 30, 31, 36

35 U.S.C. § 314(b)(1).....33

35 U.S.C. § 316(a)(11).....33

LIST OF EXHIBITS

Exhibit No.	Description of Document
2001	Fourth Amended Docket Control Order, Dkt. 93, *Advanced Coding Techs. LLC v. LG Elecs. Inc.*, Case No. 2:22-cv-00501-JRG (E.D. Tex. March 11, 2024)
2002	Defendants' Joint Patent L.R. 3-3 Invalidity Contentions and Subject Matter Ineligibility Contentions, *Advanced Coding Techs. LLC v. LG Elecs. Inc.*, Case No. 2:22-cv-00501-JRG (E.D. Tex.), served Feb. 21, 2024

I. INTRODUCTION

On January 8, 2024, Samsung Electronics Co., Ltd. ("Petitioner" or "Samsung") submitted a Petition (Paper 2, "Petition" or "Pet.") to institute *inter partes* review ("IPR") of U.S. Patent No. 10,218,995 (Ex. 1001, the "'995 Patent"), challenging Claims 2-4 and 11 (the "Challenged Claims"). The Petition asserts that Claims 2-4 and 11 are rendered obvious over the English Translation of Japanese Patent Publication No. 2007316161 A with Translation Certificate ("Ex. 1005" or "Phek") in view of Segall et al., *Spatial Scalability Within the H.264/AVC Scalable Video Coding Extension*; IEEE Transactions on Circuits & Systems for Video Tech., Vol. 17, No. 9, September 2007 ("Ex. 1006" or "Segall"), Martins et al., *A Unified Approach to Restoration, Deinterlacing and Resolution Enhancement in Decoding MPEG-2 Video*, IEEE Transactions on Circuits & Systems for Video Tech., Vol. 12, No. 9, September 2002 ("Ex. 1007" or "Martins"), and U.S. Patent Publication No.2008/0137753 ("Ex. 1008" or "He"). Pet. at 1. The Board should deny the Petition for at least the reasons described briefly below.

Petitioner fails to show that the combination of Phek, Segall, Martins, and He discloses at least "a first resolution converter configured to acquire the sequence of super-resolution enlarged decoded pictures created at the first super-resolution enlarger to work on the sequence of super-resolution enlarged decoded pictures to implement a process for a prescribed resolution conversion to create a sequence of

super-resolution decoded pictures with a standard resolution," "a second decoder configured to acquire the second sequence of encoded bits obtained with a standard resolution at the demultiplexer as a set of decoding targets, the sequence of decoded pictures created with the standard resolution at the first decoder as a set of first reference pictures, and the sequence of super-resolution decoded pictures created with the standard resolution at the first resolution converter as a set of second reference pictures," "select one of the set of first reference pictures and the set of second reference pictures based on reference picture selection information to implement a combination of processes for a prescribed prediction and a prescribed second decoding being a decoding with an extension of the standard resolution, to create a sequence of super-resolution pictures decoded with the standard resolution based on the set of decoding targets and the set of selected reference pictures," "a second resolution converter configured to acquire the sequence of decoded pictures with the standard resolution from the first decoder to work on the sequence of decoded pictures to implement an interpolation of pixels with the second enlargement to create a sequence of enlarged decoded pictures with a high resolution as a second resolution higher than the standard resolution," and "wherein the set of decoding targets, the set of first reference pictures, and the set of second reference pictures have the same value in spatial resolution."

First, the Petition is deficient because the Challenged Claims requires the

input data to the super resolution enlarger to be a standard resolution, which is the same resolution that the first resolution converter needs to downscale to. However, Petitioner's proposed combination of references (relying primarily on Martins) discloses a downscaled resolution merely to the output format. That the output device/format happens to be SDTV does not have any bearing on the recited "standard resolution." Therefore, Petitioner's reliance on the system of Martins where the amount of decimation in the downscaling is based on the resolution of the desired ***output*** format (*i.e.*, HDTV or SDTV) renders the Petition deficient.

Second, the Petition is deficient because He's deblocking control flags are not the claimed "reference picture selection information," as the Petition incorrectly alleges. He's deblocking control flag merely selects between whether to use a deblock filter to remove block effects on the block boundaries of reconstructed frames or not. Further, He's selection between a filtered reconstructed frame and an unfiltered reconstructed frame is not a selection between reference frames. The system of He creates reference frames from only filtered reconstructed frames:

Third, the Petition is deficient because Petitioner's "first mapping of the second resolution converter" incorrectly relies on Segall for the concept of multiple enhancement layers that are decoded and encoded with dependencies to obtain the recited "a second resolution higher than the standard resolution." However, the claimed "second resolution converter" does not process a different layer of

resolution, or even different pictures, than what has already been independently processed by the claimed "first super-resolution enlarger."

The Board should exercise its discretion to deny the Petition under 35 U.S.C. § 314(a) for at least the following reasons: (i) a parallel District Court Litigation (defined below) exists between the same parties or real-parties-in-interest; (ii) the District Court Litigation involves the same subject patent (the '995 Patent) with substantially the same claims; (iii) the District Court's trial will be ***over nine months before*** the projected statutory deadline; (iv) the parties have heavily invested in the District Court Litigation and a trial date is set for October 7, 2024; and (v) there is no stay of the parallel District Court Litigation.

II. THE '995 PATENT

The '995 Patent relates to moving picture encoding and decoding "adapted to work on moving picture sequences to implement processes such as those for super-resolution enlargement." '995 Patent, 1:23-31. The '995 Patent uses layered coding to increase coding efficiency and allow for the creation of high-resolution images. *Id.*, 1:23-31. The '995 Patent describes that in prior art systems, videos were processed into a "base layer" and an "enhancement layer," and frame predictions could be made only by using other frames from within its own layer. *Id.*, 1:35-53, 2:21-36. Known techniques using motion prediction to improve resolution upscaling were insufficient because they reduced encoding efficiencies and resulted in

degraded image quality. *Id.*

The ’995 Patent describes a system that maintains coding efficiency and image quality by disclosing a decoder (“2nd Decoder”) which receives three inputs, as shown in FIG. 26.

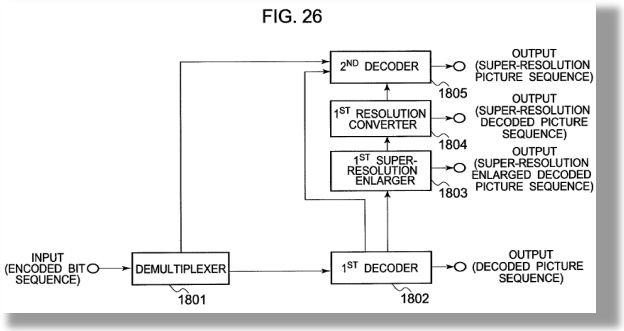

Id., FIG. 26. It receives (1) the coded extension layer sequence from the demultiplexer, (2) the decoded base layer sequence at standard resolution, and (3) the decoded base layer sequence created by super-resolution enlarging (i.e., upscaling resolution and increasing the width/height) and then converting to standard resolution. *Id.* Either one of the two standard resolution decoded sequences, whether base layer or upsampled base layer, are used as sets of reference pictures by the second decoder to decode the coded extension layer sequence it received in order to create a sequence of super-resolution pictures decoded using standard resolution reference pictures. *Id.*, Claim 2, FIG.26. As with the first resolution converter, the output sequence of the second decoder can also be put through a second resolution converter to obtain a second resolution higher than the standard resolution. *Id.*

III. THE ALLEGED PRIOR ART

A. Phek

Phek attempts to solve the problem of "provid[ing] a super-resolution processing method and device that improves the resolution and quality of image sequences and that reduces grid artifacts." Ex. 1005, Abstract. Specifically, Phek explains how its "present invention is novel":

> The present invention is novel in that it uses residual interpolation to prevent grid artifacts. Regularization can also prevent grid artifacts by adding smoothing constraints to high-resolution estimated images. However, because the smoothing constraints apply to the entire image, the smoothing strength has to be controlled. Blurring occurs in areas that do not require smoothing, and if the strength is not set properly, the blurring will be excessive or insufficient.
>
> Since residual interpolation is performed on missing pixels, areas where no pixels are missing are not blurred. Also, the residual interpolation strength is established on the basis of the value of the residual itself. Hence, a larger residual value results in a larger interpolated value, and vice versa.
>
> The result is a better super-resolution algorithm that produces sharper images compared to the use of regularization.
>
> Residual interpolation can be combined with regularization. This combination ca reduce the intensity of regularization an prevent excessive blurring.

Id., [0006]-[0009]. Fig. 1A shows an exemplary super-resolution process device of Phek:

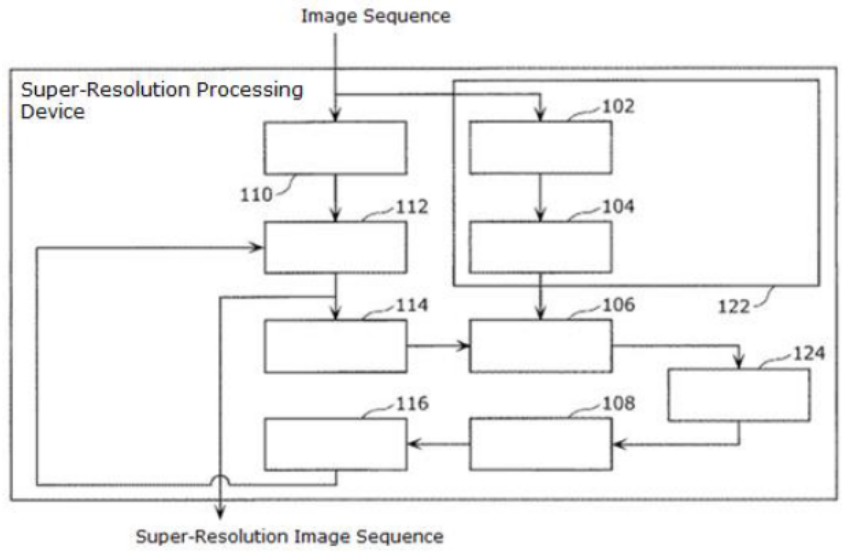

102: Motion detection processing device
104: Registration processing device
106: Frame difference processing device
108: Point spreading inverse function processing device
110: Interpolation processing device
112: High-resolution buffer
114: Point spreading function processing device
116: High-resolution estimation processing device
124: Residual interpolation processing device

Id., Fig. 1a.

B. Segall

Segall describes a "scalable extension to the H.264/AVC video coding standard" that "allows multiple resolutions of an image sequence to be contained in a single bit stream." Ex. 1006, Abstract.

Segall explains that "[t]he enhancement layer encoder takes a higher resolution sequence as input" and "higher resolution video data is often referred to as the enhancement layer." *Id.*, 2, Fig. 1.

Segall also discloses a multilayer system that utilizes image pyramids. *Id.*, 3-4, 13 ("At the high level, the design is conceptually an image pyramid"). Segall

further explains that "[i]mage pyramids describe a relationship between lower resolution and higher resolution versions of an image" where "the sequence of pictures at the lowest of these resolutions is coded in a manner such that it can be decoded independently" and "[e]ach higher resolution video sequence is coded relative to a decoded lower resolution sequence." *Id.* at 3. Therefore, Segall's addition of a second enhancement layer is part of an image pyramid that depends upon the first enhancement layer, which in turn depends upon a base layer, which is the only layer that "can be decoded independently." *Id.*

C. Martins

Martins is directed to addressing special problems associated with improving the quality and spatial resolution of video through super resolution. Ex. 1007, Abstract. Specifically, Martins proposes an algorithm which converts resolutions using upsampling and then decimation based on the supported output format (i.e., SDTV or HDTV). *Id.*, Abstract ("The algorithm is based on motion-compensated spatial upsampling from multiple images and ***decimation to the desired format***.") (emphasis added), 2 ("The algorithm has two steps. In the first step, a superresolution version (default is quadruple resolution) of each directly decoded picture is constructed. In the second step, the superresolution picture is ***decimated to the desired format***.") (emphasis added and footnote omitted).

Figs. 11 and 12 of Martins confirm that decimation occurs to obtain the

resolution supported by the desired format on the output device. For example, "Fig. 11 depicts the result of using simple upsampling of a directly decoded sequence."

Fig. 11. Direct progressive SDTV. Mobcal at 5 Mbs/s. Part of the I-picture (frame 24, top field). PSNR = 28.5 dB.

Id., 8-9, Fig. 11. For Martins' Fig. 12 and Fig. 13, the level of decimation or downsampling is also dependent only upon the desired output format (*e.g.*, SDTV or HDTV) rather than the resolution of the pictures that were the input for super-resolution:

Fig. 12. Enhanced to progressive SDTV. Mobcal at 5 Mb/s. Part of the I-picture (frame 24, top field). PSNR = 30.1 dB.

Fig. 13. Enhanced to progressive HDTV in 4 : 2 : 0. Mobcal at 5 Mb/s. Part of the I picture (frame 24, top field).

Id., Figs. 12 and 13.

The section of Martins referring to "IV. Decimation" also confirms that a resolution conversion caused by decimation is based on the desired output format of HDTV or SDTV by adjusting pixel parameters:

> The last case in (17), where there is no MC superresolution (p_{mc}) pixel at the output sample position (m_0, n_0), may occur in ***conversion to HDTV*** and in chrominance upsampling. ***Restoring SDTV*** there will always be the directly decoded pixel at (m_0, n_0) ensuring a defined pixel in p_{mc} at (m_0, n_0).

Id., 6 (emphasis added).

D. He

He "relates in general to video information processing, and more specifically to a system and method of determining a deblocking control flag of scalable video system for indicating presentation of deblocking parameters for multiple layers for reducing bits in the bitstream." Ex. 1008, [0002].

He describes a deblocking control flag that enables and disables the use of a deblock filter on reconstructed frames. *Id.*, [0006]-[0008]. Specifically, He describes that "[t]he deblocking filter enhances the decoded picture quality and increases the encoding efficiency by removing the block effects in the boundary of each 4x4, 8x8, and/or 16x16 block." *Id.*, [0006]. Therefore, at a fundamental level, He's deblocking control flag merely selects between whether to use a deblock filter to remove block effects on the block boundaries of reconstructed frames or not. *Id.*

He's FIG. 2 and its supporting disclosure, show the creation of reference frames from filtered reconstructed frames but not unfiltered reconstructed frames:

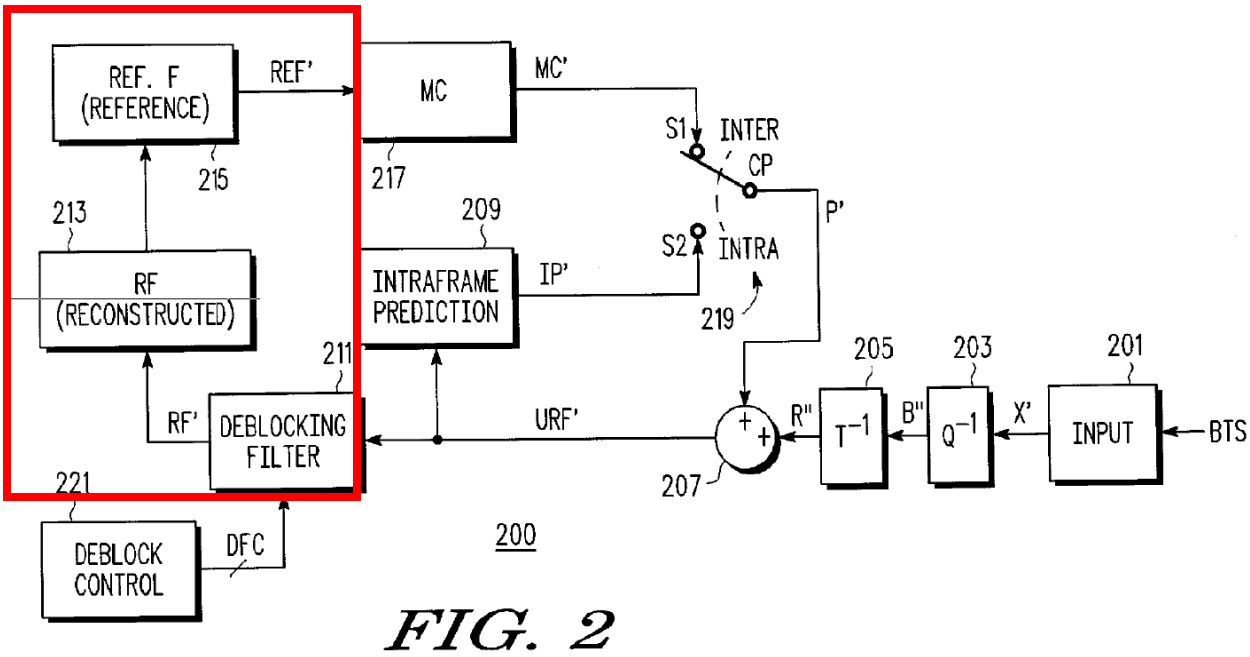

FIG. 2

Ex. 1008, FIG. 2 (annotated), [0033] ("One or two previously encoded and decoded (and selectively filtered) frames from the RF buffer 213 are provided to a frame storage 215, which provides ***reference information REF' to the input of a motion compensation (MC) circuit 217***.") (emphasis added).

He's unfiltered reconstructed frame may act as an intra-predicted frame providing intraframe prediction information IP':

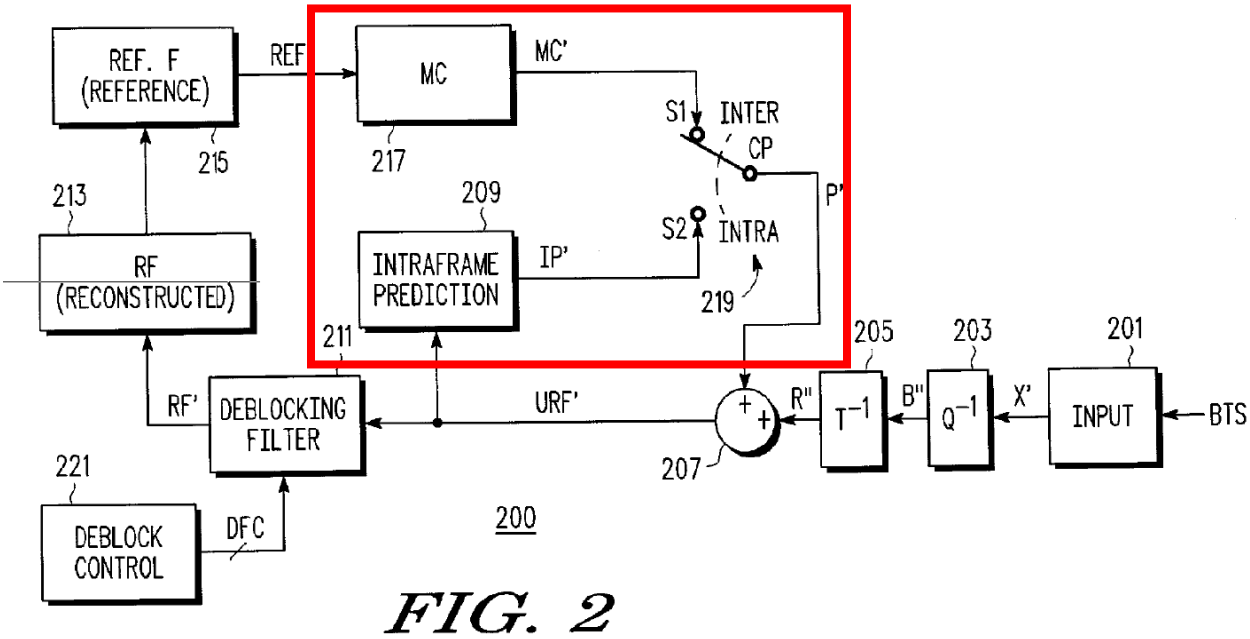

FIG. 2

Id., FIG. 2 (annotated), [0033] ("The intraframe prediction circuit 209 provides intraframe prediction information IP' to the input terminal S2 of the switch 219. The switch 219 selects between the motion compensated prediction information MC' and the intraframe prediction information IP' and provides the selected prediction information P'. The input bitstream BTS provides mode information for controlling the switch 219 for selecting between interframe and intraframe prediction information as known to those of ordinary skill in the art."). Therefore, the only selection described in the Fig. 2 decoder of He, outside of the selection to apply a deblocking filter to reconstructed frames, is between interframe prediction information (*i.e.*, motion compensated prediction information) and intraframe prediction information. *Id.*

IV. CLAIM CONSTRUCTION

For the purposes of this Preliminary Response, Patent Owner agrees with Petitioner that "no formal construction[s] are presently necessary." Pet. at 2.

V. LEVEL OF ORDINARY SKILL IN THE ART

For the purposes of this Preliminary Response only, Patent Owner utilizes Petitioner's proposed level of skill in the art: "at least a bachelor's degree in computer science, electrical engineering, computer engineering, or a related field, with 2-3 years of experience in digital video processing, or a related field. Additional graduate education could substitute for professional experience, and *vice versa*." Pet. at 3-4 (citations omitted).

VI. PETITIONER HAS NOT DEMONSTRATED A REASONABLE LIKELIHOOD OF SUCCESS FOR THE GROUNDS ADVANCED IN THE PETITION, AND THE PETITION SHOULD BE DENIED

The question of obviousness is resolved on the basis of underlying factual determinations, including: (1) the scope and content of the prior art, (2) any differences between the claimed subject matter and the prior art, (3) the level of skill in the art, and (4) so-called secondary considerations where in evidence. *Graham v. John Deere Co. of Kansas City*, 383 U.S. 1, 17-18 (1966); *KSR Int'l Co. v. Teleflex Inc.*, 550 U.S. 398, 406 (2007). The question is not whether the differences themselves would have been obvious, but whether the claimed invention as a whole would have been obvious. *Stratoflex, Inc. v. Aeroquip Corp.*, 713 F.2d 1530, 1537

(Fed. Cir. 1983).

The Board has held that a failure to identify the differences between the claimed subject matter and the prior art is fatal to an obviousness challenge. *See, Apple, Inc. v. Contentguard Holdings, Inc.*, IPR2015-00355, Decision Denying Institution of *Inter Partes* Review, Paper 9 at 9-10 (P.T.A.B. June 26, 2015) (denying institution for failure to identify the differences between the claimed subject matter and the prior art).

In arriving at an obviousness determination, the Board must sufficiently explain and support the conclusions that the prior art references disclose all the elements recited in the Challenged Claims and a relevant, skilled artisan not only could have made, but would have been motivated to combine all the prior art references in the way the patent claims and reasonably expected success. *Pers. Web Techs., LLC v. Apple, Inc.*, 848 F.3d 987, 994 (Fed. Cir. 2017). That is, even if all the claim elements are found across a number of references, an obviousness determination must consider whether a person of ordinary skill in the art would have the motivation to combine those references. *Intelligent Bio-Sys., Inc. v. Illumina Cambridge Ltd.*, 821 F.3d 1359, 1368 (Fed. Cir. 2016); *Los Angeles Biomedical Rsch. Inst. at Harbor-UCLA Med. Ctr. v. Eli Lilly & Co.*, 849 F.3d 1049, 1067 (Fed. Cir. 2017) (vacating and remanding an obviousness determination, in part, because the Board did not make factual finding as to whether there was an apparent reason

to combine all three prior art references to achieve the claimed invention and whether a person of skill in the art would have had a reasonable expectation of success from such a combination). This combinability determination, as supported by an articulated motivation to combine, requires a plausible rationale as to why those prior art references would have worked together. *Broadcom Corp. v. Emulex Corp.*, 732 F.3d 1325, 1335 (Fed. Cir. 2013). Absent some articulated rationale, a "common sense" finding is no different than the conclusory statement "would have been obvious." *In re Van Os*, 844 F.3d 1359, 1361 (Fed. Cir. 2017). Of additional importance, "knowledge of a problem and motivation to solve it are entirely different from motivation to combine particular references . . . . " *Innogenetics, N.V. v. Abbott Lab'ys.*, 512 F.3d 1363, 1373 (Fed. Cir. 2008).

A. Claim 2 Is Not Obvious Over Phek In View of Segall, Martins, and He

1. The Petition Does Not Show that Phek In View of Segall, Martins, and He Discloses "*a first resolution converter configured to acquire the sequence of super-resolution enlarged decoded pictures created at the first super-resolution enlarger to work on the sequence of super-resolution enlarged decoded pictures to implement a process for a prescribed resolution conversion to create a sequence of super-resolution decoded pictures with a standard resolution*," as Required by Claim Element [2.4]

Claim 1 of the '995 Patent requires "a first resolution converter configured to acquire the sequence of super-resolution enlarged decoded pictures created at the

first super-resolution enlarger to work on the sequence of super-resolution enlarged decoded pictures to implement a process for a prescribed resolution conversion to create a sequence of super-resolution decoded pictures with a standard resolution."

The Petition is deficient because it does not show that the Phek-Segall-Martins-He combination discloses the recited "process for a ***prescribed*** resolution conversion to create a sequence of super-resolution decoded pictures ***with a standard resolution***." Claim 2 of the '995 Patent requires the input data to be a standard resolution whereas the proposed combination discloses a downscaled resolution to the output format. That the output device/format happens to be SDTV does not have any bearing on the recited "standard resolution."

The claim language of the '995 Patent describes that the recited standard resolution of this "first resolution converter" claim limitation is the resolution of "the first sequence of encoded bits" that has already been determined (*i.e.*, prescribed) at the "first decoder" claim limitation. '995 Patent, Claim 1 ("a first decoder configured to acquire ***the first sequence of encoded bits obtained with a standard resolution*** at the demultiplexer to implement thereon a process for a ***prescribed first decoding*** to create ***a sequence of decoded pictures with a standard resolution***.") (emphasis added).

On the contrary, the Petition acknowledges that the decimation or downsampling of Martins (which is the only reference of its alleged combination

relied upon for this claim limitation) is untethered to any "prescribed first decoding to create a sequence of decoded pictures with a standard resolution." In particular, Petitioner admits that the "resolution converter" of Martins converts resolutions based only ***on the supported output format*** (*i.e.*, SDTV or HDTV). Pet. at 56; *see also* Ex. 1007, Abstract ("The algorithm is based on motion-compensated spatial upsampling from multiple images and ***decimation to the desired format***.") (emphasis added), 2 ("The algorithm has two steps. In the first step, a superresolution version (default is quadruple resolution) of each directly decoded picture is constructed. In the second step, the superresolution picture is ***decimated to the desired format***.") (emphasis added and footnote omitted).

Petitioner's own cites to Figs. 11 and 12 of Martins confirm that there is no "resolution conversion" based on the "standard resolution" (i.e., the same resolution as the input of the first super-resolution enlarger). Pet. at 57-58. Instead, Martins clearly states that "Fig. 11 depicts the result of using simple upsampling of a directly decoded sequence." Ex. 1007 at 8-9. In order to obtain the resolution of the SDTV in Fig. 11, the resolution of the input must have been ***lower*** if only upsampling was used.

Fig. 11. Direct progressive SDTV. Mobcal at 5 Mbs/s. Part of the I-picture (frame 24, top field). PSNR = 28.5 dB.

Id., Fig. 11. For Fig. 12 and Fig. 13 (ignored by Petitioner), where presumably Martins' technique of upsampling and downsampling was used to obtain SDTV and HDTV respectively, Martins does not mention what the input resolution to the upsampling was during the technique because it does not matter for comparative purposes to Fig. 11. *See id.*, 8-9. The level of decimation or downsampling in Martins is dependent only upon the desired output format (*e.g.*, SDTV or HDTV) as compared to the super-resolution rather than the resolution of the pictures that were the input for super-resolution:

Fig. 12. Enhanced to progressive SDTV. Mobcal at 5 Mb/s. Part of the I-picture (frame 24, top field). PSNR = 30.1 dB.

Fig. 13. Enhanced to progressive HDTV in 4 : 2 : 0. Mobcal at 5 Mb/s. Part of the I picture (frame 24, top field).

Id., Figs. 12 and 13.

The section of Martins referring to "IV. Decimation" also confirms that a resolution conversion caused by decimation is based on the desired output format of HDTV or SDTV by adjusting pixel parameters:

> The last case in (17), where there is no MC superresolution (p_{mc}) pixel at the output sample position (m_0, n_0), may occur in ***conversion to HDTV*** and in chrominance upsampling. ***Restoring SDTV*** there will always be the directly decoded pixel at (m_0, n_0) ensuring a defined pixel in p_{mc} at (m_0, n_0).

Id., 6.

Without a prescribed first decoding in the first instance to create a sequence of decoded standard resolution pictures, there can be no basis for a prescribed resolution conversion of upscaled pictures to downscaled pictures with the ***same***

standard resolution recited in the "first decoding" claim limitation (*i.e.*, a prescribed resolution conversion can only occur with a prescribed input with standard resolution subject to the first decoding). Therefore, Petitioner's reliance on the system of Martins where the amount of decimation in the downscaling is based on the resolution of the desired ***output*** format (*i.e.*, SDTV) renders the Petition deficient with respect to this claim limitation.

Because of this deficiency, institution should be denied.

2. The Petition Does Not Show that Phek In View of Segall, Martins, and He Discloses "*a second decoder configured to acquire the second sequence of encoded bits obtained with a standard resolution at the demultiplexer as a set of decoding targets, the sequence of decoded pictures created with the standard resolution at the first decoder as a set of first reference pictures, and the sequence of super-resolution decoded pictures created with the standard resolution at the first resolution converter as a set of second reference pictures*," as Required by Claim Element [2.5.i]

Claim 2 of the '995 Patent requires "a second decoder configured to acquire the second sequence of encoded bits obtained with a standard resolution at the demultiplexer as a set of decoding targets, the sequence of decoded pictures created with the standard resolution at the first decoder as a set of first reference pictures, and the sequence of super-resolution decoded pictures created with the standard resolution at the first resolution converter as a set of second reference pictures."

As noted in Section VI.A.1 above, the Petition does not show that the

combination of Phek, Segall, Martins, and He discloses "a first resolution converter configured to acquire the sequence of super-resolution enlarged decoded pictures created at the first super-resolution enlarger to work on the sequence of super-resolution enlarged decoded pictures to implement ***a process for a prescribed resolution conversion to create a sequence of super-resolution decoded pictures with a standard resolution***." Therefore, the Petition also cannot show that that the combination discloses "a second decoder configured to acquire the second sequence of encoded bits obtained with a standard resolution at the demultiplexer as a set of decoding targets, the sequence of decoded pictures created with the standard resolution at the first decoder as a set of first reference pictures, and ***the sequence of super-resolution decoded pictures created with the standard resolution at the first resolution converter as a set of second reference pictures***."

Because of this deficiency, institution should be denied.

3. The Petition Does Not Show that Phek In View of Segall, Martins, and He Discloses "*select one of the set of first reference pictures and the set of second reference pictures based on reference picture selection information to implement a combination of processes for a prescribed prediction and a prescribed second decoding being a decoding with an extension of the standard resolution, to create a sequence of super-resolution pictures decoded with the standard resolution based on the set of decoding targets and the set of selected reference pictures*," as Required by Claim Element [2.5.ii]

Claim 2 of the '995 Patent requires a decoder configured to "select one of the

set of first reference pictures and the set of second reference pictures based on reference picture selection information to implement a combination of processes for a prescribed prediction and a prescribed second decoding being a decoding with an extension of the standard resolution, to create a sequence of super-resolution pictures decoded with the standard resolution based on the set of decoding targets and the set of selected reference pictures." The Petition fails to show that the prior art teaches this claim limitation for two reasons.

First, as noted in Section VI.A.2 above, the Petition is deficient because it does not show that the combination of Phek, Segall, Martins, and He discloses "a second decoder configured to acquire the second sequence of encoded bits obtained with a standard resolution at the demultiplexer as a set of decoding targets, the sequence of decoded pictures created with the standard resolution at the first decoder as a set of first reference pictures, and the sequence of super-resolution decoded pictures created with the standard resolution at the first resolution converter as ***a set of second reference pictures***." Therefore, the Petition is also deficient because it does not show that that the combination of Phek, Segall, Martins, and He discloses "select one of the set of first reference pictures and ***the set of second reference pictures*** based on reference picture selection information to implement a combination of processes for a prescribed prediction and a prescribed second decoding being a decoding with an extension of the standard resolution, to create a

sequence of super-resolution pictures decoded with the standard resolution based on the set of decoding targets and the set of selected reference pictures."

Second, the Petition is deficient because He's deblocking control flags are not the claimed "reference picture selection information," as the Petition incorrectly alleges. Pet. at 67. In fact, He's deblocking control flags are irrelevant to reference pictures. As the Petition notes, "[b]ased on the value of the deblocking control flag, the deblock control circuit 221 issues control signals to a deblocking filter 131 to selectively enable/disable the use of a deblock filter on reconstructed (decoded) frames." Pet. at 68 (citing Ex. 1008, [0006]-[0008][1]). He describes that "[t]he deblocking filter enhances the decoded picture quality and increases the encoding efficiency by removing the block effects in the boundary of each 4x4, 8x8, and/or 16x16 block." Ex. 1008, [0006]. Therefore, at a fundamental level, He's deblocking control flag merely selects between whether to use a deblock filter to remove block effects on the block boundaries of reconstructed frames or not. *Id.*

Petitioner makes an unsupported illogical leap to conclude that the selection made by He's deblock filter (whether to apply a deblocking filter to a reconstructed frame) constitutes a selection between alleged reference frames: a filtered reconstructed frame and an unfiltered reconstructed frame. Pet. at 68. He's FIG. 2

[1] Patent Owner notes that Ex. 1008, [0006]-[0008] does not correspond to a disclosure of He's deblock control circuit 221 or deblocking filter 131.

and its supporting disclosure, which are relied upon by Petitioner (Pet. at 68), show only one creation of reference frames from filtered reconstructed frames:

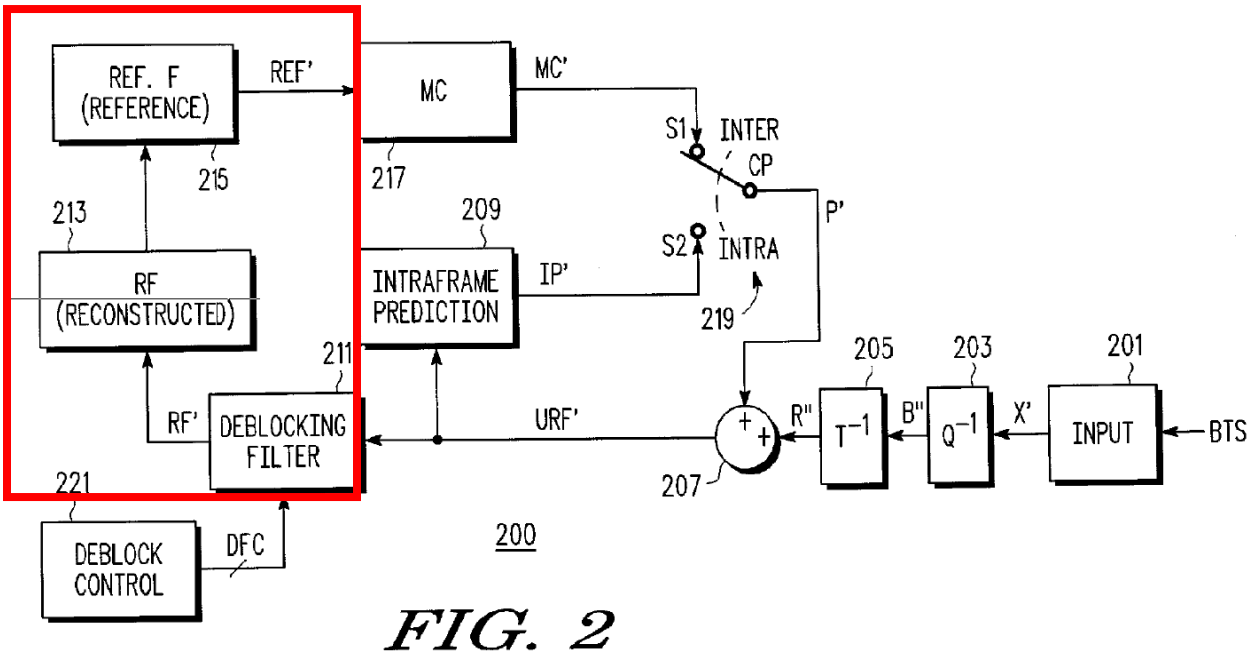

FIG. 2

Ex. 1008, FIG. 2 (annotated), [0033] ("One or two previously encoded and decoded (and selectively filtered) frames from the RF buffer 213 are provided to a frame storage 215, which provides ***reference information REF' to the input of a motion compensation (MC) circuit 217***."). Therefore, the motion compensation circuit 217 of FIG. 2 does not have a selection between different reference picture sets.

The Petition is completely incorrect when it states that "[w]hen the deblock filter is disabled, the original (unfiltered or non-enhanced) reconstructed frame is used as the reference picture for prediction of a subsequent frame." Pet. at 68. As shown in FIG. 2 of He and its supporting disclosure, there is no reference picture

associated with the unfiltered reconstructed frame because, if selected, the unfiltered reconstructed frame is an ***intra-***predicted frame providing intraframe prediction information IP' (*i.e.*, there is no reference frame when the prediction takes place ***within*** the same frame):

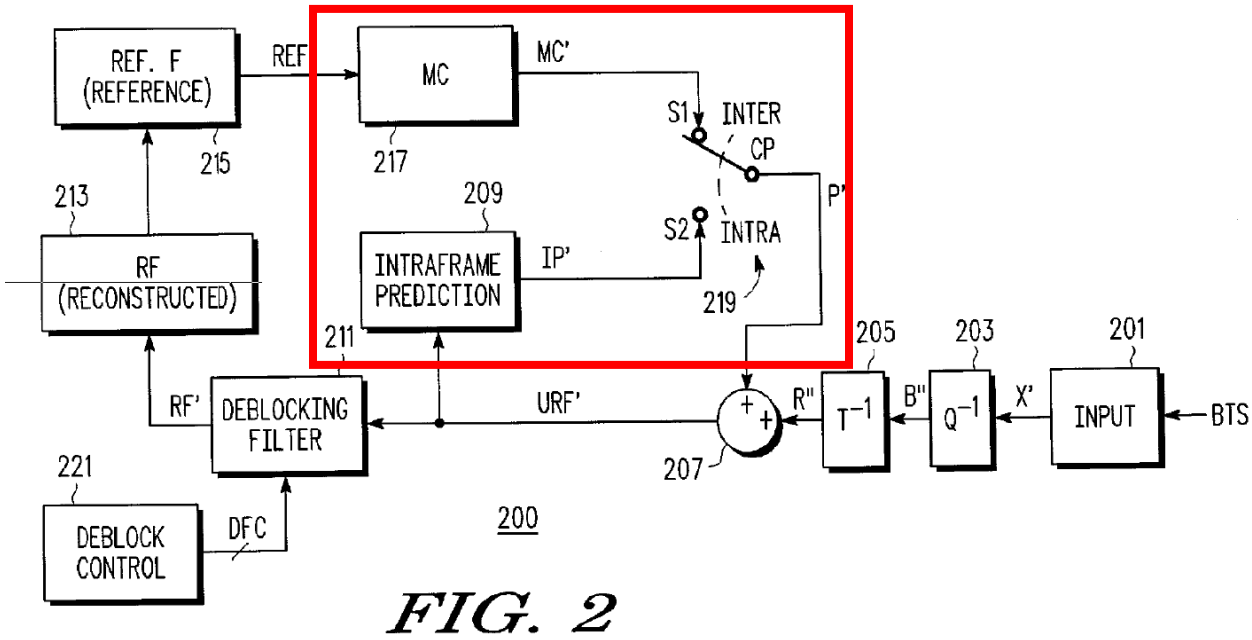

FIG. 2

Ex. 1008, FIGg. 2 (annotated), [0033] ("The intraframe prediction circuit 209 provides intraframe prediction information IP' to the input terminal S2 of the switch 219. The switch 219 selects between the motion compensated prediction information MC' and the intraframe prediction information IP' and provides the selected prediction information P'. The input bitstream BTS provides mode information for controlling the switch 219 for selecting between interframe and intraframe prediction information as known to those of ordinary skill in the art."). Therefore, the only selection described in the Fig. 2 decoder of He, outside of the unrelated

selection to apply a deblocking filter to reconstructed frames, is between interframe prediction information (*i.e.*, motion compensated prediction information) and intraframe prediction information, not between different reference picture sets, as required by this claim limitation's "select[ing] one of the set of first reference pictures and the set of second reference pictures." '995 Patent, Claim 1.

Because of this deficiency, institution should be denied.

4. The Petition Does Not Show that Phek In View of Segall, Martins, and He Discloses "*a second resolution converter configured to acquire the sequence of decoded pictures with the standard resolution from the first decoder to work on the sequence of decoded pictures to implement an interpolation of pixels with the second enlargement to create a sequence of enlarged decoded pictures with a high resolution as a second resolution higher than the standard resolution*," as Required by Claim Element [2.6]

Claim 2 of the '995 Patent requires "a second resolution converter configured to acquire the sequence of decoded pictures with the standard resolution from the first decoder to work on the sequence of decoded pictures to implement an interpolation of pixels with the second enlargement to create a sequence of enlarged decoded pictures with a high resolution as a second resolution higher than the standard resolution."

The Petition is deficient because Petitioner's "first mapping of the second resolution converter" (Pet. at 75) and "second mapping of the second resolution converter (Pet. at 77) incorrectly relies on Segall for the concept of multiple

enhancement layers (Pet. at 73-74) in its Phek-Segall-Martins-He combination system to obtain the recited "a second resolution higher than the standard resolution." As Segall explains, "[t]he enhancement layer encoder takes a higher resolution sequence as input" and "higher resolution video data is often referred to as the enhancement layer." Ex. 1006, 2, Fig. 1. But the plain language of this claim limitation precludes the concept of Segall's multiple enhancement layers because the claimed "second resolution converter" does not process a different layer of resolution, or even different pictures, than what has already been independently processed by the claimed "first super-resolution enlarger." *See* '995 Patent, Claim 2 ("a second resolution converter configured to ***acquire the sequence of decoded pictures with the standard resolution from the first decoder***"; "a first super-resolution enlarger configured to ***acquire the sequence of decoded pictures created with a standard resolution at the first decoder***") (emphasis added).

Even if the Petition were correct that the claimed "second resolution converter" operated as an "enhancement layer," Segall expressly discloses that its multilayer system utilizes image pyramids. Ex. 1006, 3-4, 13 ("At the high level, the design is conceptually an image pyramid"). Segall explains that "[i]mage pyramids describe a relationship between lower resolution and higher resolution versions of an image" where "the sequence of pictures at the lowest of these resolutions is coded in a manner such that it can be decoded independently" and "[e]ach higher resolution

video sequence is coded relative to a decoded lower resolution sequence." *Id.* at 3. Therefore, Segall's addition of a second enhancement layer as part of Petitioner's Phek-Segall-Martins-He combination is part of an image pyramid that depends upon the first enhancement layer, which in turn depends upon a base layer, which is the only layer that "can be decoded independently." *Id.* This dependent decoding of enhancement layers contradicts the language of this claim limitation in which the recited "second resolution converter" "create[s] a sequence of enlarged decoded pictures with a high resolution as a second resolution higher than the standard resolution" using only one independent input layer that is the claimed "sequence of decoded pictures with the standard resolution from the first decoder." In view of independent processing built into the language of this claim limitation, the claimed second resolution converter cannot be disclosed by Segall's multilayer scheme in combination with the proposed system of Phek-Martins-He.

Because of this deficiency, institution should be denied.

5. The Petition Does Not Show that Phek In View of Segall, Martins, and He Discloses "*wherein the set of decoding targets, the set of first reference pictures, and the set of second reference pictures have the same value in spatial resolution*," as Required by Claim Element [2.7]

Claim 2 of the '995 Patent requires "wherein the set of decoding targets, the set of first reference pictures, and the set of second reference pictures have the same value in spatial resolution."

As noted in Section VI.A.2 above, the Petition does not show that the combination of Phek, Segall, Martins, and He discloses "a second decoder configured to acquire the second sequence of encoded bits obtained with a standard resolution at the demultiplexer as a set of decoding targets, the sequence of decoded pictures created with the standard resolution at the first decoder as a set of first reference pictures, and ***the sequence of super-resolution decoded pictures created with the standard resolution at the first resolution converter as a set of second reference pictures***." Therefore, the Petition does not show that that the combination of Phek, Segall, Martins, and He discloses "wherein the set of decoding targets, the set of first reference pictures, and ***the set of second reference pictures*** have the same value in spatial resolution."

Because of this deficiency, institution should be denied.

B. Claims 3-4 and 11 Are Not Obvious Over Phek In View of Segall, Martins, and He

Claim 3 recites "[a] moving picture decoding method " that mirrors the claim limitations of Claim 2, which recites "[a] moving picture decoding system." '995 Patent, Claims 2, 3. In other words, Claim 3 discloses the method analogue of Claim 2. *Id.* For at least the same reasons as Claim 2, any combination of Phek, Segall, Martins, and He, fails to render obvious Claim 3.

Claim 4 recites "[a] recording medium storing a moving picture decoding

program comprising a non-transitory computer-readable medium" that mirrors the claim limitations of Claim 2, which recites "[a] moving picture decoding system." '995, Claims 2, 4. In other words, Claim 4 discloses the recording medium analogue of Claim 2. *Id.* For at least the same reasons as Claim 2, any combination of Phek, Segall, Martins, and He, fails to render obvious Claim 4.

Claim 11 depends upon Claim 2, and for at least the same reasons as Claim 2, any combination of Phek, Segall, Martins, and He, fails to render obvious Claim 11. '995, Claim 11.

VII. THE PETITION SHOULD BE DENIED IN THE DISCRETION OF THE DIRECTOR UNDER 35 U.S.C. § 314(a)

Based on Petitioner's reasons regarding § 314(a), the Board should exercise its discretion to deny this Petition.

The circumstances of the parallel District Court Litigation, *Advanced Coding Techs. LLC v. LG Elecs. Inc.*, Case No. 2:22-cv-00501-JRG (E.D. Tex.) ("District Court Litigation") necessitates denial of the Petition under the Board's precedent, as every factor considered in relation to efficiency, fairness, and the merits supports denial. *See Apple Inc. v. Fintiv, Inc.*, IPR2020-00019, Paper 11, at 6 (P.T.A.B. Mar. 20, 2020) (precedential) (considering (a) "whether the petitioner and the defendant in the parallel proceeding are the same party"; (b) "overlap between issues raised in the petition and in the parallel proceeding" (c) "proximity of the court's trial date to

the Board's projected statutory deadline for a final written decision"; (d) "investment in the parallel proceeding by the court and the parties"; (e) "whether the court granted a stay or evidence exists that one may be granted if a proceeding is instituted"; and (f) "other circumstances that impact the Board's exercise of discretion, including the merits.").

As set forth below, these factors collectively demonstrate that efficiency and integrity of the AIA are best served by denying review. First, the Petitioner is the Defendant in the parallel proceeding. *See infra* Section VII.A. Second, the asserted claims in the District Court Litigation are all at issue in the Petition. *See infra* Section II.B. Third, trial in the District Court Litigation is set for October 7, 2024, over nine months prior to the projected statutory deadline for a Final Written Decision of this Petition in July 22, 2025. *See infra* Section VII.C. Fourth, the parties (and Patent Owner in particular) have invested significant resources on developing legal and factual issues of validity and infringement in the District Court Litigation and will have invested substantially more resources before any decision on this Petition. *See infra* Section VII.D. Fifth, the Court has already denied a stay pending this Petition. *See infra* Section VII.E. Finally, no other factors favor institution. *See infra* Section VII.F.

Accordingly, the Board should exercise its discretion under § 314(a) and deny the Petition because institution of this proceeding would not be consistent with the

objective of the AIA to "provide an effective and efficient alternative to district court litigation." *NHK Spring Co. v. Intri-Plex Techs., Inc.*, IPR2018-00752, Paper 8, at 20 (P.T.A.B. Sept. 12, 2018) (quoting *Gen. Plastic Indus. Co. v. Canon Kabushiki Kaisha*, IPR2016-01357, Paper 19, at 16–17 (P.T.A.B. Sept. 6, 2017) (precedential)).

A. The Parallel District Court Litigation and the Petition Involve the Same Parties

As Petitioner notes, there exists a parallel District Court Litigation between the same parties regarding the same subject patent (the '995 Patent). Pet. at 77. Petitioner is a party to the District Court Litigation captioned as *Advanced Coding Techs. LLC v. LG Elecs. Inc.*, Case No. 2:22-cv-00501-JRG (E.D. Tex.). Accordingly, this factor weighs in favor of discretionary denial.

B. The District Court Litigation Involves Substantially the Same Claims

All of the asserted claims of the '995 Patent in the District Court Litigation are at issue in this Petition. "In at least these ways, the parallel proceedings would duplicate effort. This is an inefficient use of Board, party, and judicial resources and raises the possibility of conflicting decisions." *Cisco Sys., Inc. v. Ramot at Tel Aviv Univ. Ltd.*, IPR2020-00122, Paper 15 at 10 (P.T.A.B. May 15, 2020). Accordingly, this fact weighs in favor of discretionary denial.

C. Proximity of the District Court's Trial Date

The proximity of the District Court Litigation's trial date to the Board's projected statutory deadline for a Final Written Decision strongly weighs in favor of discretionary denial.

The parties' trial is scheduled for October 7, 2024. Exhibit 2001 (Fourth Amended Docket Control Order, Dkt. 93, *Advanced Coding Techs. LLC v. LG Elecs. Inc.*, Case No. 2:22-cv-00501-JRG (E.D. Tex. April 2, 2024)). Pursuant to 35 U.S.C. §§ 314(b)(1) and 316(a)(11), the projected statutory deadline for a Final Written Decision of this Petition is July 22, 2025.[2] As the District Court's trial will be ***over nine months before*** the projected statutory deadline, this factor weighs strongly in favor of denying institution. *See Supercell Oy v. Gree, Inc.*, IPR2020-00513, Paper 11 at 10-12 (P.T.A.B. June 24, 2020) (denying institution where the jury trial was scheduled to conclude approximately ten months before the statutory deadline); *Edward LifeSciences Corp. v. Evalve, Inc.*, IPR2019-01479, Paper 7, at 6-13

[2] The statutory deadline for institution is July 22, 2024, "three months after receiving a preliminary response to the petition under section 313." *See* 35 U.S.C. § 314(b)(1). If instituted, the statutory deadline for Final Written Decision is July 22, 2025, "not later than 1 year after the date on which the Director notices the institution of a review."

(P.T.A.B. Feb. 26, 2020) (denying institution where jury trial would conclude more than nine months before a final decision would be due); *Samsung Elecs. Am., Inc. v. Uniloc 2017 LLC*, IPR2019-01218, Paper 7, at 7-10 (P.T.A.B. Jan. 7, 2020) (denying institution where jury selection was scheduled for approximately six months before trial in the Board proceeding would conclude); *Next Caller Inc. v. TrustID, Inc.*, IPR2019-00961, -00962, Paper 10, at 8-16 (P.T.A.B. Oct. 16, 2019) (denying institution where trial was scheduled to conclude "several months," before a final decision would be due); *Cisco Sys., Inc.*, IPR2020-00122, Paper 15 at 8 ("Because the trial date is substantially earlier than the projected statutory deadline for the Board's final decision, this factor weighs in favor of discretionary denial.").

Petitioner does not contest that the proximity of the trial favors denial of institution. Thus, this factor also weighs in favor of discretionary denial.

D. Significant Investment and Petitioner's Delay in Filing the Petition

The parties' investment in the parallel proceeding weighs in favor of discretionary denial. In the District Court Litigation, the Court has already entered five Docket Control Orders (Dkts. 46, 76, 84, 89, 93), Discovery Order (Dkt. 47), Protective Order (Dkts. 50, 64), and E-Discovery Order (Dkt. 57). Discovery is also well under way. The parties have already exchanged infringement contentions pursuant to P.R. 3-1 and invalidity contentions pursuant to P.R. 3-3, and claim

construction briefing is almost complete. Ex. 2001. A trial date is also set for October 7, 2024, which is less than six months away. *Id.* Thus, the parties' and Court's substantial investment in this proceeding weighs in favor of denial of institution under this factor.

E. No Stay of the Parallel District Court Litigation

There is no stay of the parallel District Court Litigation and, in fact, a motion for a stay by Petitioner has already been denied. See Dkt. 102, *Advanced Coding Techs. LLC v. LG Elecs. Inc.*, Case No. 2:22-cv-00501-JRG (E.D. Tex. April 11, 2024). Even if the Petition were instituted and Petitioner filed another motion to stay the District Court Litigation, prejudice, tactical disadvantage to Advanced Coding Technologies LLC, the late stage of the litigation, and the lack of potential simplification would weigh strongly against such a motion. *See Lennon Image Techs., LLC v. Macy's Retail Holdings, Inc.*, 2:13-CV-00235-JRG, 2014 WL 4652117, at *1 (E.D. Tex. Sept. 18, 2014). The statutory deadline for institution (on July 22, 2024) is not until after the related district court litigation claim construction hearing is completed (on May 16, 2024)[3]. Ex. 2001; *see Intell. Ventures II v. FedEx Corp.*, No. 2:16-cv-00980-JRG, Dkt. 141 at 5 (E.D. Tex. Oct. 24, 2017) ("The Court agrees that the Parties have already invested substantial effort and resources during

[3] The Court updated the Parties that the Claim Construction Hearing would be postponed from May 14, 2024, as noted in the Court's Docket Control Order to May 16, 2024.

discovery and in preparing claim construction briefing . . . . These circumstances weigh against staying this case").

Moreover, a stay would not decrease the burden on the Court and the parties since any instituted IPR would only cover 1 out of at least 31 combinations of obviousness that Petitioner has raised in the District Court Litigation, and do not include Petitioner's challenges under § 101, § 102, or § 112. *See generally* Ex. 2002, at 40-49, 64-66, 205-247, 279-289, 309-311. *Intell. Ventures II*, No. 2:16-cv-00980-JRG, Dkt. 141 at 3-4 ("[T]he instituted IPRs only cover a narrow slice of the invalidity arguments Defendants have raised in this case. For example, Defendants have argued that the '715 Patent is invalid under § 102 with respect to at least eight references . . . under § 103 with respect to at least twenty-six combinations . . . under § 112 [], and under § 101.").

Accordingly, it would be unlikely for the Court to hold that a stay would streamline the litigation and this factor supports denial of institution.

F. Other Factors Favor Discretionary Denial

Petitioner does not present a strong case on the merits, further supporting denial of institution. *See supra* Section VI. Petitioner also does not identify any other factors which weigh against discretionary denial. Pet. at 74-76.

Thus, when viewing the factors together, the Petition should be denied in the Director's discretion under 35 U.S.C. § 314(a).

VIII. CONCLUSION

For the foregoing reasons, Patent Owner respectfully requests that the Board deny institution of the Petition in its entirety.

Respectfully submitted,

Dated: April 22, 2024 By: /*Peter Lambrianakos* /

Peter Lambrianakos (Reg. No. 58,279)
Email: plambrianakos@fabricantllp.com
Lead Counsel for Patent Owner
Vincent J. Rubino, III (Reg. No. 68,594)
Email: vrubino@fabricantllp.com
Back-Up Counsel for Patent Owner
Joseph M. Mercadante (Reg. No. 64,077)
Email: jmercadante@fabricantllp.com
Back-Up Counsel for Patent Owner
FABRICANT LLP
411 Theodore Fremd Avenue
Suite 206 South
Rye, New York 10580
Tel. 212-257-5797
Fax. 212-257-5796

CERTIFICATE OF WORD COUNT

The undersigned hereby certifies that the portions of the above-captioned PATENT OWNER'S PRELIMINARY RESPONSE specified in 37 C.F.R. § 42.24 has 7,284 words in compliance with the 14,000 word limit set forth in 37 C.F.R. § 42.24. This word count was prepared using Microsoft Word for Office 365.

Respectfully submitted,

April 22, 2024 By: /*Peter Lambrianakos* /

Peter Lambrianakos (Reg. No. 58,279)
Lead Counsel for Patent Owner
FABRICANT LLP
411 Theodore Fremd Avenue
Suite 206 South
Rye, New York 10580
Tel. 212-257-5797
Fax. 212-257-5796
Email: plambrianakos@fabricantllp.com

CERTIFICATE OF SERVICE

A copy of the foregoing Patent Owner's Preliminary Response and Exhibits 2001 through 2002 have been served on Petitioner's counsel of record as follows:

W. Karl Renner
Email: IPR39843-0171IP1@fr.com
Email: PTABInbound@fr.com
Email: axf-ptab@fr.com
Jeremy J. Monaldo
Email: jjm@fr.com
Nicholas Stephens
Email: nstephens@fr.com
Rishi Gupta
Email: rgupta@fr.com
FISH & RICHARDSON
60 South Sixth Street, Suite 3200
Minneapolis, MN 55402

Attorneys for Samsung Electronics Co., Ltd.

April 22, 2024

By: /*Peter Lambrianakos* /

Peter Lambrianakos (Reg. No. 58,279)
Lead Counsel for Patent Owner
FABRICANT LLP
411 Theodore Fremd Avenue
Suite 206 South
Rye, New York 10580
Tel. 212-257-5797
Fax. 212-257-5796