US006950895B2

(12) **United States Patent**
Bottom

(10) **Patent No.: US 6,950,895 B2**
(45) **Date of Patent: Sep. 27, 2005**

(54) **MODULAR SERVER ARCHITECTURE**

(75) Inventor: **David A. Bottom**, Arroyo Grande, CA (US)

(73) Assignee: **Intel Corporation**, Santa Clara, CA (US)

(*) Notice: Subject to any disclaimer, the term of this patent is extended or adjusted under 35 U.S.C. 154(b) by 538 days.

(21) Appl. No.: **09/880,403**

(22) Filed: **Jun. 13, 2001**

(65) **Prior Publication Data**

US 2002/0194412 A1 Dec. 19, 2002

(51) **Int. Cl.**[7] **G06F 13/00**; H05K 7/14
(52) **U.S. Cl.** **710/301**; 361/796
(58) **Field of Search** 710/301, 302; 312/223.2, 223.3; 361/608, 683, 686, 687, 724, 727, 730, 752, 753, 788, 796, 797, 803

(56) **References Cited**

U.S. PATENT DOCUMENTS

5,488,541 A * 1/1996 Mistry et al. 361/788
6,025,989 A * 2/2000 Ayd et al. 361/695
6,035,356 A * 3/2000 Khan et al. 710/301
6,411,506 B1 * 6/2002 Hipp et al. 361/686
6,452,809 B1 * 9/2002 Jackson et al. 361/796

* cited by examiner

Primary Examiner—Khanh Dang
(74) *Attorney, Agent, or Firm*—Ted A. Crawford

(57) **ABSTRACT**

A modular server system includes a midplane having a system management bus and a plurality of blade interfaces on the midplane. The blade interfaces are in electrical communication with each other. A server blade is removeably connectable to one of the plurality of blade interfaces on the midplane. The server blade has a server blade system management bus in electrical communication with the system management bus of the midplane, and a network interface to connect to a network. A media blade is removeably connectable to one of the plurality of blade interfaces on the midplane, and the media blade has at least one storage medium device.

35 Claims, 6 Drawing Sheets

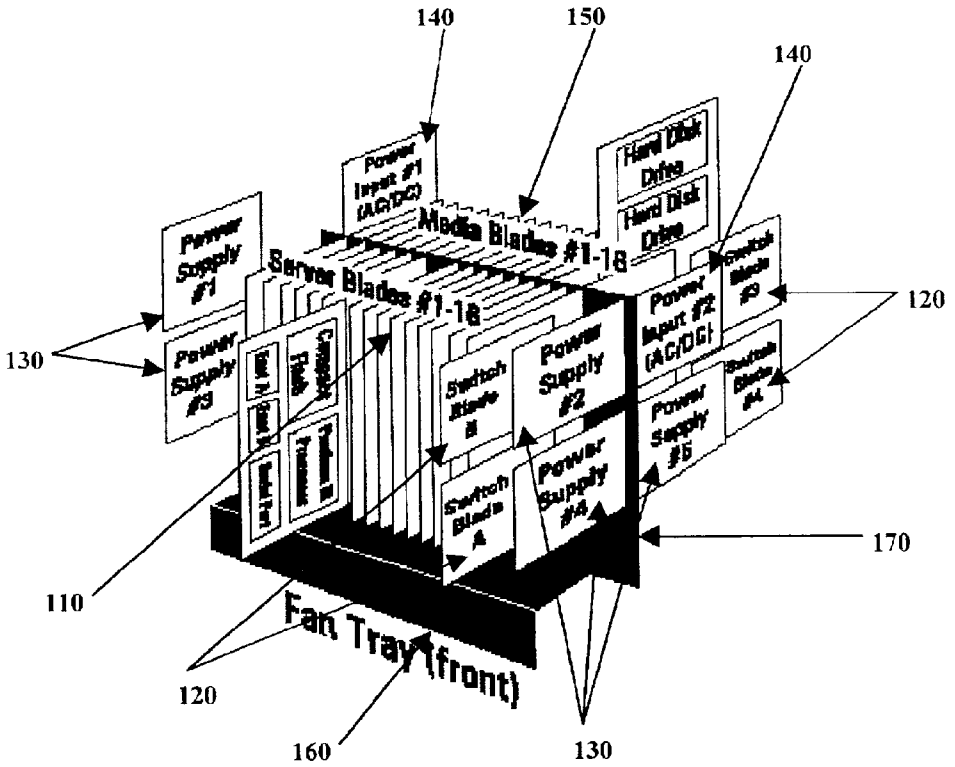

100

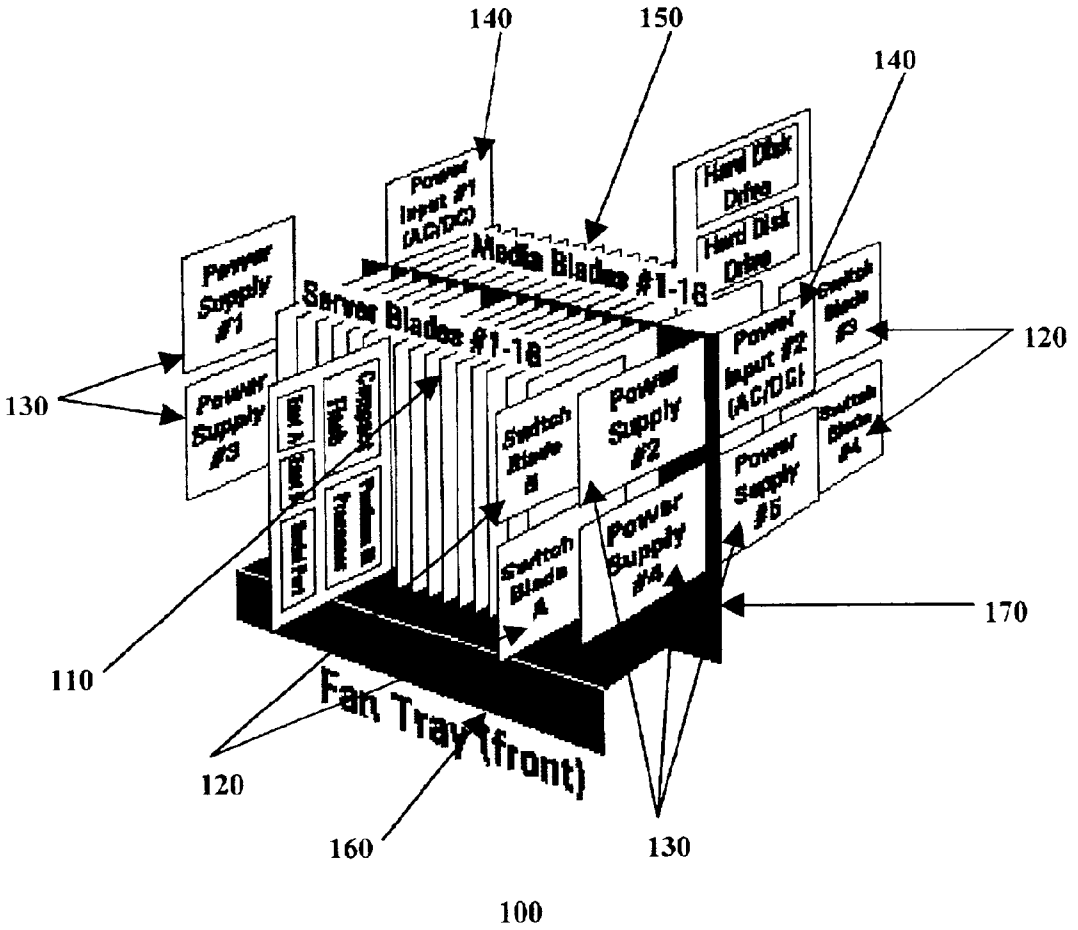
140
150
140
Power Input #1 (AC/DC)
Hard Disk Drive
Hard Disk Drive
Media Blades #1-18
Server Blades #1-18
Power Supply #1
Power Supply #3
Switch Blade #3
Switch Blade #4
Power Input #2 (AC/DC)
Power Supply #2
Power Supply #5
Switch Blade B
Switch Blade A
Power Supply #4
Fan Tray (front)
130
120
110
120
160
130
170
100

FIG. 1

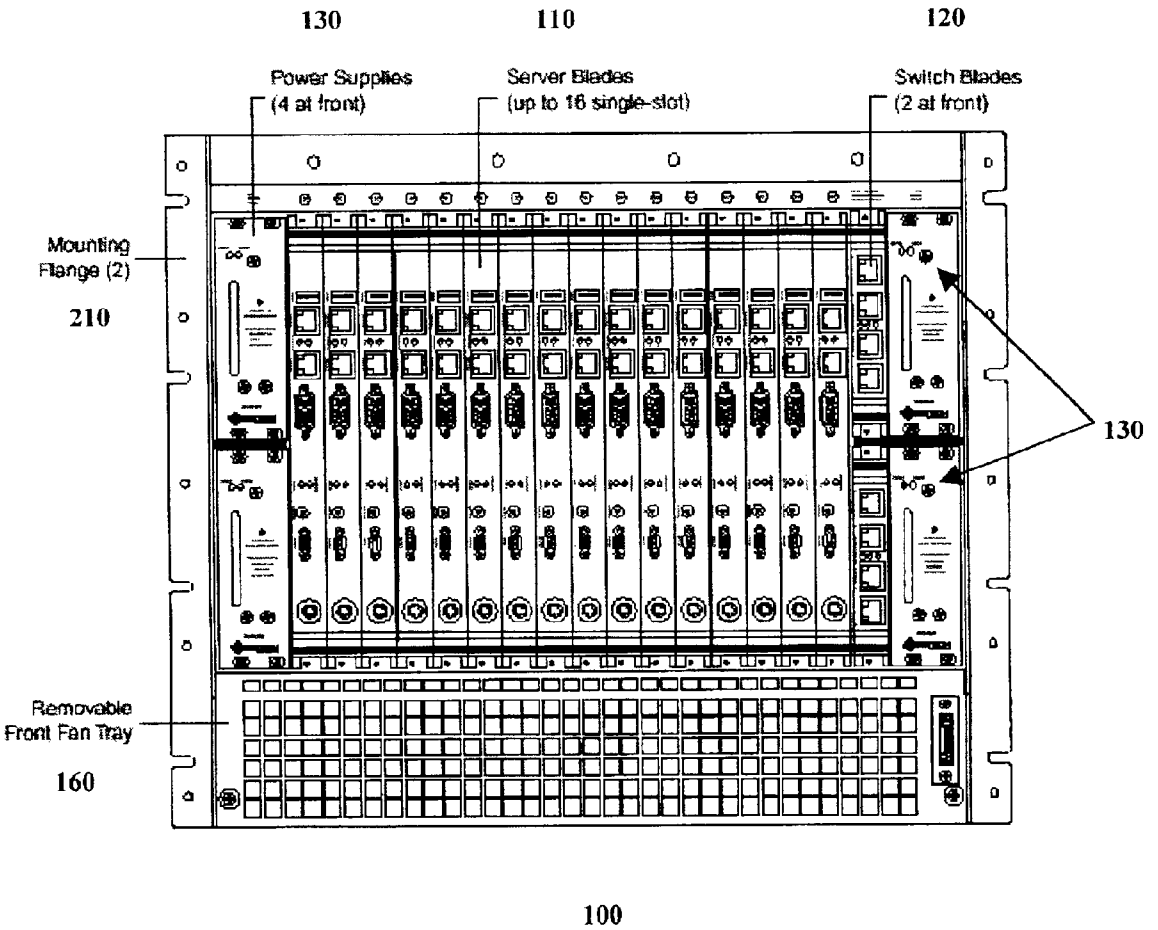
130
110
120
Power Supplies
(4 at front)
Server Blades
(up to 16 single-slot)
Switch Blades
(2 at front)
Mounting
Flange (2)
210
130
Removable
Front Fan Tray
160
100

FIG. 2

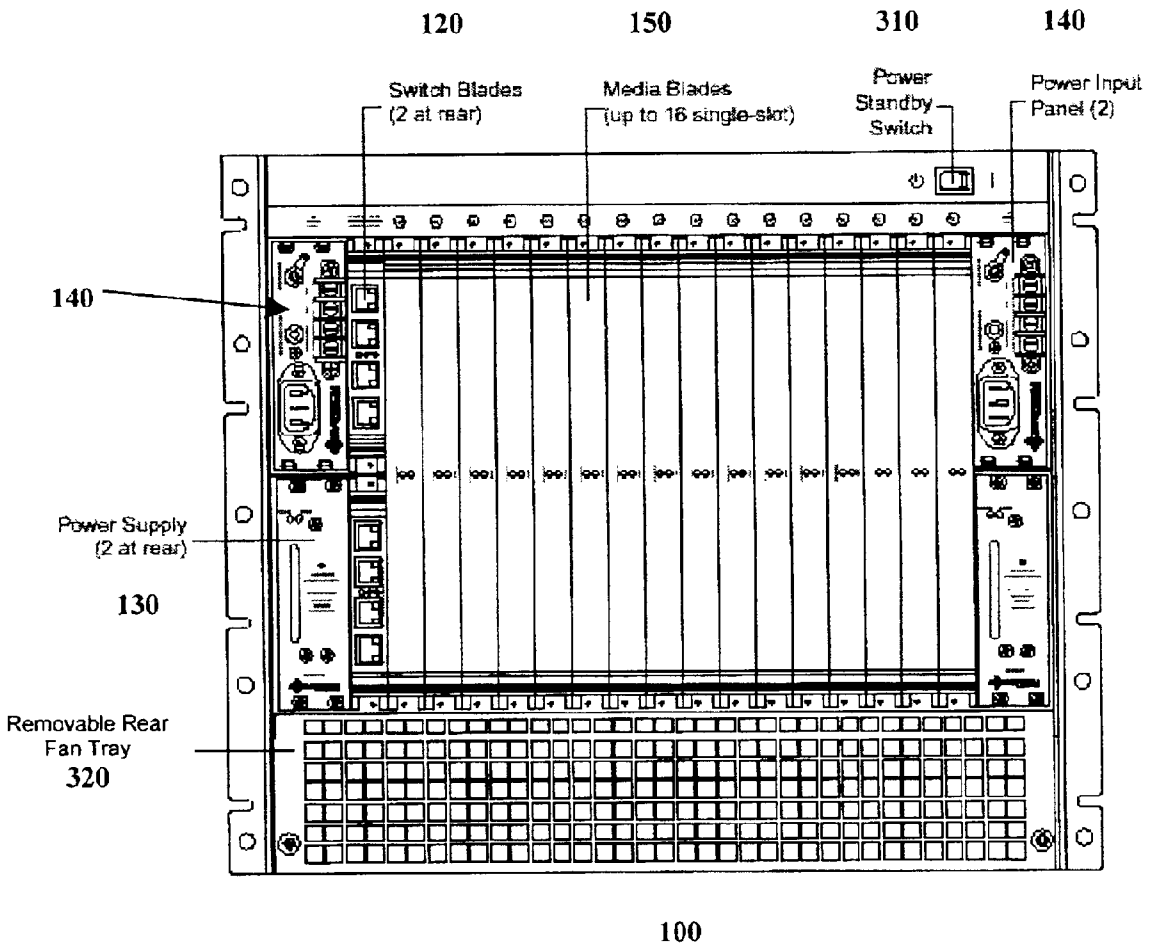
120
150
310
140
Switch Blades
(2 at rear)
Media Blades
(up to 16 single-slot)
Power
Standby
Switch
Power Input
Panel (2)
140
Power Supply
(2 at rear)
130
Removable Rear
Fan Tray
320
100

FIG. 3

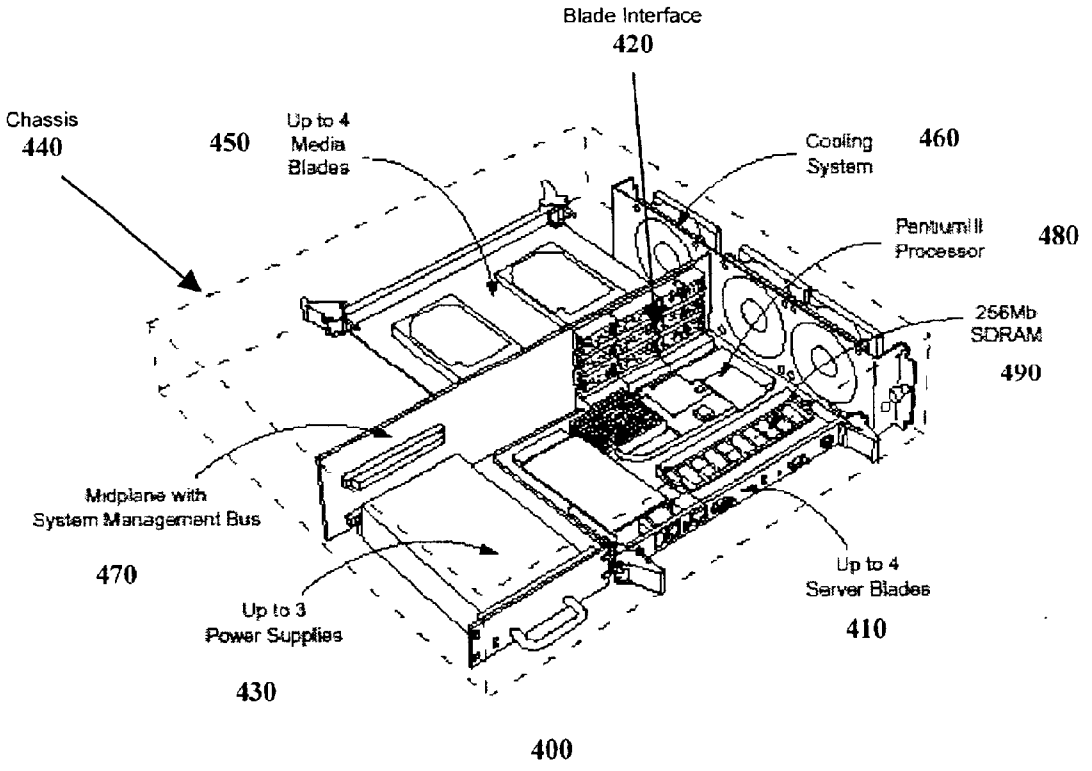
Blade Interface
420
Chassis
440
450
Up to 4
Media
Blades
Cooling
System
460
PentiumII
Processor
480
256Mb
SDRAM
490
Midplane with
System Management Bus
470
Up to 3
Power Supplies
430
Up to 4
Server Blades
410
400

FIG. 4

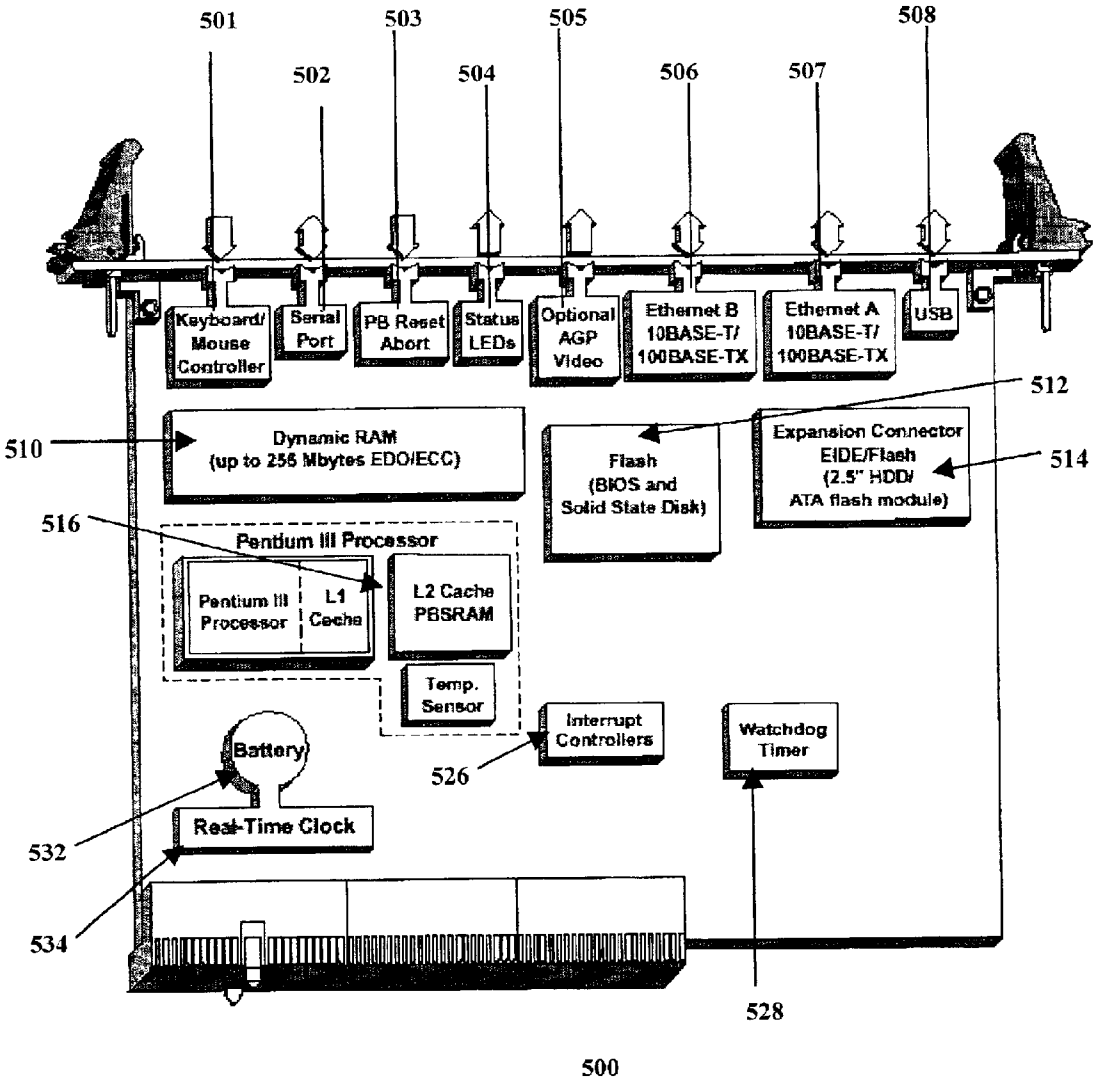
501
502
503
504
505
506
507
508
Keyboard/ Mouse Controller
Serial Port
PB Reset Abort
Status LEDs
Optional AGP Video
Ethernet B 10BASE-T/ 100BASE-TX
Ethernet A 10BASE-T/ 100BASE-TX
USB
512
510
Dynamic RAM (up to 256 Mbytes EDO/ECC)
Flash (BIOS and Solid State Disk)
Expansion Connector EIDE/Flash (2.5" HDD/ ATA flash module)
514
516
Pentium III Processor
Pentium III Processor
L1 Cache
L2 Cache PBSRAM
Temp. Sensor
Interrupt Controllers
Watchdog Timer
Battery
526
Real-Time Clock
532
534
528
500

FIG. 5

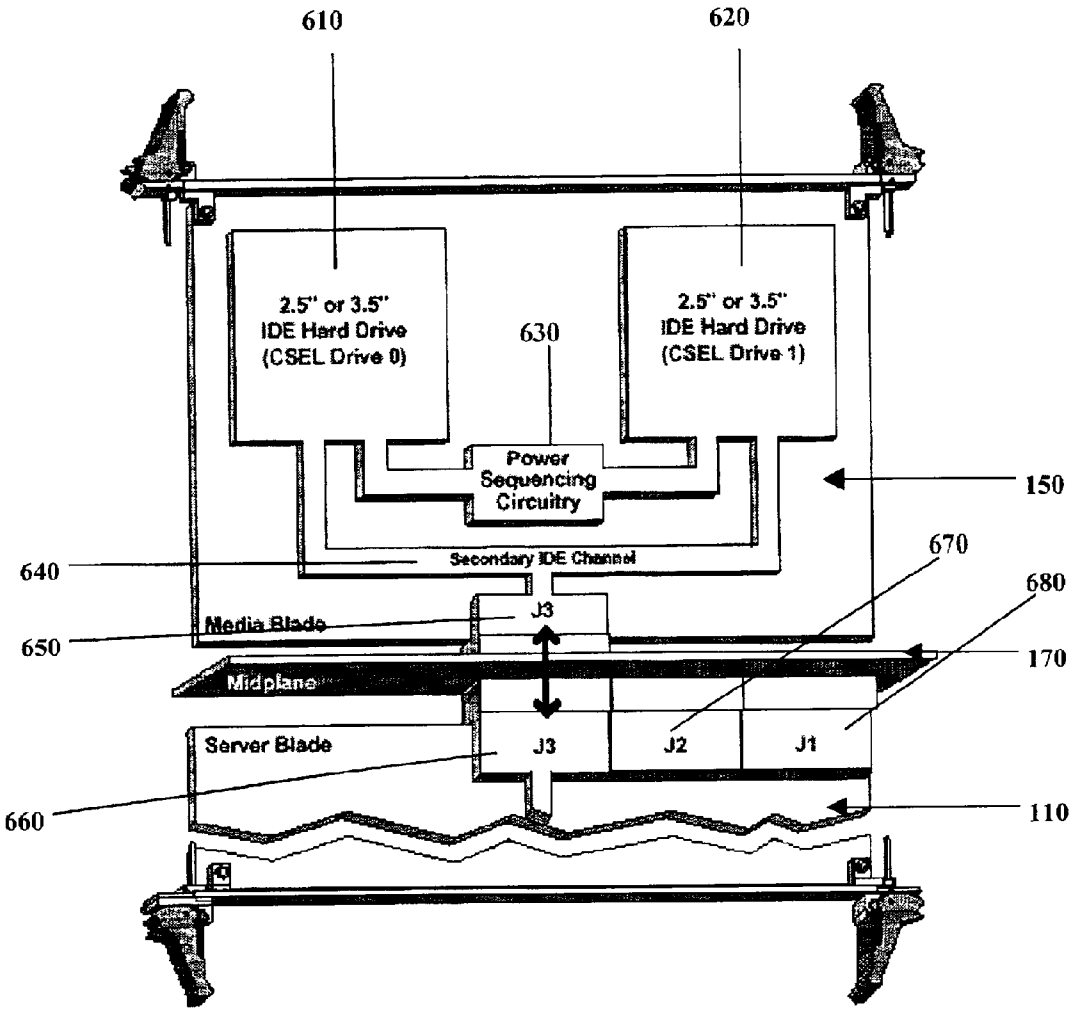
610
620
2.5" or 3.5"
IDE Hard Drive
(CSEL Drive 0)
630
2.5" or 3.5"
IDE Hard Drive
(CSEL Drive 1)
Power
Sequencing
Circuitry
150
640
Secondary IDE Channel
670
680
Media Blade
J3
650
170
Midplane
Server Blade
J3
J2
J1
660
110

FIG. 6

MODULAR SERVER ARCHITECTURE

RELATED U.S. APPLICATION DATA

This application claims priority under 35 U.S.C. Section 119(e) from U.S. provisional patent application Ser. No. 60/287,466, filed Apr. 30, 2001.

BACKGROUND OF THE INVENTION

1. Field of the Invention

The present invention generally relates to computer server systems. More particularly, the present invention relates to computer server systems having a modular architecture.

2. Discussion of the Related Art

Consumers today embrace an expanding array of Internet applications, and businesses are jumping on the e-commerce bandwagon to take advantage of this growth. Internet Protocol (IP) services are the key to the phenomenal growth in Web hosting. Hosting, in turn, drives utilization of bandwidth supplied by the backbone network. For those who own backbone networks, the focus is about selling bandwidth—the amount of data that can be transmitted in a fixed amount of time. The builders of this infrastructure today control the growth of the Internet. At the heart of the infrastructure are servers, which are the engines that drive IP services.

Those who have built and operate data centers that interface to the Internet backbone network strive to provide a secure, managed, and reliable environment in which to host IP services, which they sell along with Internet bandwidth, so as to optimize profitability. But, backbone network providers have also become data center operators because they have seen that data centers sell more IP services and therefore generate even more revenue from sales of their network bandwidth.

Next generation Application Service Providers (ASPs) are writing applications to provide even more IP services. To date, e-mail is the number one selling ASP package. The growth in wireless Internet and other innovations will further expand these services. In the case of the ASP, its IP service is the revenue generator. A data center hosts the ASP's IP service, and somewhere, a backbone network provider is selling bandwidth to the data center operator.

Revenue generation is dependent on the Internet data center and its entire infrastructure. Building and operating an Internet data center is very costly. Data centers constructed today to house as many as 10,000 servers cost upwards of $150 million to build and outfit. These facilities have been proclaimed the most expensive real estate on the planet. Added to that are the operational resources required to keep a 24 hours, 7 days a week, 365 days a year data center running smoothly. Therefore, if the servers in the data centers are the engines powering IP services, it becomes very clear that every data center requires a few thousand really good, "bulletproof" engines to enhance revenue generation and help control infrastructure costs.

The servers installed in Internet data centers typically utilize more physical space and more power than they actually require to perform their tasks. These server systems are often constructed with less than optimal quality components. Many server systems have poor reliability relative to the large number of units installed, which may range from the hundreds to the thousands, and as a result have high maintenance and operational costs. With today's skyrocketing real estate costs, it is an important consideration for data centers to efficiently use the floor space available for the server systems. Moreover, server systems are generally very

cumbersome and time consuming to deploy and repair, and the costs associated with the time it takes to deploy or repair a server also makes a significant impact on the bottom line for a data center operator.

Therefore, there is a need for a compact, high-density, rapidly-deployable, high-availability server system having simplified management and serviceability, and unlimited scalability. The server system would provide higher revenues for data center operators, top-of-the-line performance, and cost savings.

BRIEF DESCRIPTION OF THE DRAWINGS

FIG. **1** illustrates a modular server system according to an embodiment of the present invention;

FIG. **2** illustrates a first side view of a modular server system according to an embodiment of the present invention;

FIG. **3** illustrates a second side view of a modular server system according to an embodiment of the present invention;

FIG. **4** illustrates a perspective view of a modular server system according to another embodiment of the present invention;

FIG. **5** illustrates a server blade according to an embodiment of the present invention; and

FIG. **6** illustrates a media blade having a connection with a server blade via a midplane according to an embodiment of the present invention.

DETAILED DESCRIPTION

FIG. **1** illustrates a modular server system according to an embodiment of the present invention. The modular server system **100** is provided for Web hosting and ASPs requiring server solutions with carrier-class availability, reliability, and scalability. Carrier-class systems have features that are more demanding than enterprise-grade systems, such as "high availability" (HA), high dependability and redundancy. Carrier-class systems are typically used in business-critical applications including telecommunications and data communications where system up-time is crucial. In the telecommunications industry, high availability servers are redundant servers that achieve 99.999% up-time, often referred to as "five nines".

At the heart of the modular server system **100** is the midplane **170**, which may be a PC-style circuit board having a plurality of blade interfaces **420** (see FIG. **4**) providing a common interconnect for all modules connected thereto. The blade interfaces **420** are in electrical communication with each other and with the system management bus (discussed below) of the midplane **170**. The midplane **170** is preferably based on a CompactPCI form factor (CompactPCI Specification, PICMG 2.0, Version 2.1, by the PCI (Peripheral Component Interconnect) Industrial Computer Manufactures Group (PICMG)), wherein the blade interfaces **420** are CompactPCI slots or connectors. CompactPCI utilizes the Eurocard form factor popularized by the "Versa Module Europa" (VME) bus having standard Eurocard dimensions and high-density 2 mm pin-and-socket connectors. In the modular server system **100** illustrated in FIG. **1**, up to sixteen independent server blades **110** may be supported, along with up to sixteen media blades **150**. However, any other numbers of server blades **110** and media blades **150** may be supported. A blade is generally a mother board or a single board computer (SBC) having a central processing unit (CPU). Although it is preferable that each

server blade **110** have a corresponding media blade **120**, it is not a requirement, as multiple server blades **110** may share a single media blade **120**, and vice versa. By utilizing the midplane **170**, the network (such as the local area network) becomes the primary interconnect between the blades **110**, **150**. Server blades **110** and media blades **150** are discussed in further detail below.

The modular server system **100** illustrated in FIG. **1** is also adapted to support up to four switch blades **120** for complete system network (e.g., Ethernet) switching and N+1 redundancy. In an embodiment of the present invention, the switch blades **120** have twenty 10/100 Base-T auto-negotiating ports and support 4,096 Media Access Controller (MAC) addresses. Preferably, of the twenty ports, sixteen of them are assigned to one Ethernet channel from the system's **100** midplane **170** (connected to all sixteen server blades **110**, as illustrated in the example in FIG. **1**), and the remaining four ports are accessible through RJ-45 (Ethernet) connectors, for example, on the switch blade's **120** face plate. However, other configurations may be adapted depending on the number of server blades **110** supported by the modular server system **100**. Data packets are preferably buffered in the switch blade **120** so that Ethernet collisions do not occur on any channel, and a full-managed Layer 3/4 switch may provide Quality of Service (QoS) control, while in all cases a non-block switch fabric with sufficient bandwidth to prevent packet loss is recommended.

According to an embodiment of the present invention, two switch blades **120** are utilized for a fully-functional modular server system **100**, and additional switch blades **120** may be added for high availability redundancy. In a system **100** with four switch blades **120**, for example, one can be assigned to Ethernet channel A for system management traffic, and another to channel B for Web traffic, while the remaining two may be placed in standby mode for hardware and/or software fail-over capability.

In the modular server system **100** illustrated in FIG. **1**, up to six load sharing power supplies **130** (Power Supply #5 not shown in FIG. **1**) may be connected to the midplane **170** to provide power to the modules of the server system **100**. These power supplies **130** (e.g., 150 W power supplies) may provide for N+1 redundancy as well. Up to two power (AC/DC) inputs **140** may be connected to the midplane **170** to provide input power to the modular server system **100**. A removable fan tray with cooling fans **160** (see also FIG. **2**) may be utilized to provide cooling air flow within the modular server system **100** to cool the modules therein. According to an embodiment of the present invention, the removable fan tray **160** may include up to six fans for N+1 redundancy. The power supplies **130** and the cooling fans **160** of the modular server system **100** may be shared by the server blades **110** and media blades **150** within the modular server system **100** (i.e., each server blade **110** or media blade **150** need not have its own power supply or cooling fan). The sharing of the power supplies **130** and cooling fans **160** provides a more efficient use of the resources of the modular server system **100** and minimizes space.

FIG. **2** illustrates a first side view of a modular server system according to an embodiment of the present invention. According to an embodiment of the present invention, up to sixteen server blades **110** may be accommodated by the modular server system **100** at its first side. Two switch blades **120**, such as 20-port Ethernet switches, may be accommodated on the first side of the modular server system **100**. Up to four power supplies **130** may be accommodated on the first side of the modular server system **100** as well. The removable fan tray **160** may also be installed and removed from the first side of the modular server system **100**. Mounting flanges **210** on the modular server system **100** allow for front, mid, or rear rack mounting.

FIG. **3** illustrates a second side view of a modular server system according to an embodiment of the present invention. According to an embodiment of the present invention, up to sixteen media blades **150** may be accommodated by the modular server system **100** at its second side. Two switch blades **120** may be also accommodated on the second side of the modular server system **100**. Up to two power supplies **130** and two power inputs **140** may be accommodated on the second side of the modular server system **100** as well. A power switch **310** for the modular server system **400** may also be provided on the second side. A rear removable fan tray **320** may also be installed and removed from the second side of the modular server system **100**. Although the server blades **110** and media blades **150** are preferably connected to the midplane **170** at opposite sides, that is not a requirement. The midplane **170** may be configured so that the server blades **110** and media blades **150** are connectable to the midplane **170** on the same side.

FIG. **4** illustrates a perspective view of a modular server system according to another embodiment of the present invention. The modular server system **400** in FIG. **4** is adapted to accommodate up to four server blades **410**, and up to four media blades **450**. A chassis **440** may be provided to enclose the modular server system **400**. The midplane **470** provides a common interconnect for all modules connected thereto, including the server blades **410** and media blades **450**. According to the embodiment in FIG. **4**, up to three power supplies **430** may be accommodated by the modular server system **400**. A cooling fan system **460** is also provided to provide cooling air flow to the modules of the server system **400**. According to an embodiment of the present invention, the server blade **410** connected to the midplane **470** may include a 500 MHz Intel Pentium III processor **480**, 256 KB on-die L2 cache, and a 256 MB error correcting coded (ECC) synchronous-dynamic random access memory (SDRAM) **490**. However, any suitable central processing unit (CPU) and memory devices may be utilized. When the server blades **410** and media blades **450** are installed and configured in the modular server system **400**, they operate like any other server system, utilizing available operating systems such as Microsoft Windows NT Server 4.0 (Service Pack 6a).

FIG. **5** illustrates a server blade according to an embodiment of the present invention. The server blade **500** is preferably a telecom-style CPU board designed to work as a modular component of the server system **100** (see FIG. **1**). When the server blade **500** is paired up with a media blade **150**, the combination becomes an independent server within the modular server system **100**, and therefore the modular server system **100** itself may house a plurality of independent servers. According to an embodiment of the present invention, the server blade **500** is designed according to the CompactPCI form factor. The Compact PCI form factor is an industry standard that provides a rugged, modular, high performance platform for the server blade **500**. However, any suitable interface standard may be utilized, though. The CompactPCI form factor also enables "hot swap" functionality in a multi-server environment of the modular server system **100**, meaning that the server blade **500** may be replaceable (removed from or installed into the modular server system **100**) without powering down the entire system (CompactPCI Hot Swap Specification, PICMG 2.1, Version 1.0, by the PCI (Peripheral Component Interconnect) Industrial Computer Manufactures Group (PICMG)). Hot swap-

ping allows a faster mean time to repair (MTTR) for damaged components or modules, such as field replaceable units (like server blades **110**, media blades **150**, power supplies **130**, and the fan tray **160**), within the modular server system **100**.

The server blade **500** illustratively includes a CPU **516**, such as the Intel Pentium III processor mobile module. The Pentium III processor module contains a power supply for the processor's unique voltage requirements, a temperature sensor, a system memory (L2 cache), and core logic required to bridge the processor to the standard system buses. In an embodiment of the present invention, the server blade **500** incorporates a system management bus, in communication with the system management bus of the midplane, for access to system-wide monitoring and alarming functions. The system management bus allows the server blade **500** (e.g., one server blade **500** may be designated as the Active Manager utilizing server system management software) to communicate with the midplane **170** system management bus to monitor the midplane **170** and the modules (e.g., the server blades **110**, media blades **150**) connected thereto, to monitor on-board operating voltages and temperatures, and can be further configured to "trip" an alarm if thresholds are exceeded.

The server blade **500** illustrated in the example of FIG. **5** also includes a pair of network interfaces **506**, **507**. According to the embodiment of FIG. **5**, dual Ethernet ports **506**, **507** are provided. The Ethernet interfaces **506**, **507** may utilize the Ethernet Express Pro 100 compatible, Intel 82559 Fast Ethernet Multifunction PCI Controller. The 82559 controller includes both the Media Access Controller (MAC) and the physical layer (PHY) interface combined into a single component solution. The network interfaces **506**, **507** may be RJ-45 connectors on the faceplate of the server blade **500**, and the faceplate may also include status LEDs **504** to indicate the status of each channel.

Semiconductor memory **510** is preferably utilized by the server blade **500** for local memory, such as a SDRAM dual-inline memory module (DIMM). Preferably, the SDRAM utilized is error correcting coded (ECC), which corrects single bit errors and reports multiple bit errors to the operating system. The server blade **500** may also provide on-board flash memory **512** for storing the system basic input/output system (BIOS), and for use as a solid-state disk. A battery-backable static random access memory (SRAM) may also be provided for this use as well.

The server blade **500** preferably includes interrupt controllers **526**, such as 8259-style controllers, which provide support for level-triggered and edge-triggered inputs, individual input masking, and fixed and rotating priorities. A push-button reset/abort button **503** may also be provided to allow a user to reset the server blade **500**. A keyboard/mouse connector **501** allows a user to connect a keyboard or mouse to the server blade **500** for interaction therewith. Optionally, a video output plug **505**, such as a VGA connector, may be provided to allow connection to a monitor for video output. A universal serial bus (USB) **508** connector may also be provided to allow the server blade **500** to connect to other devices (e.g., portable optical disc drives, hard disk drives, etc.) as required.

The server blade **500** may include a serial port **502**, such as a 16C550 PC-compatible serial port, on the front panel. A real-time clock **534** with battery power **532** is preferably provided on the server blade **500** to perform timekeeping functions, such as alarm, maskable periodic interrupt, and calendaring. A watchdog timer **528** may be optionally provided to monitor system operation and to be programmable for a number of timeout periods. Preferably, a two-stage watchdog timer is utilized, that is, it can be enabled to produce a non-maskable interrupt (NMI) before it generates a Reset Request. Therefore, failure to strobe the watchdog timer within the programmed time period may result in an NMI, a Reset Request, or both. A register is set if the watchdog timer caused the reset event. This watchdog timer is cleared only on power-up, enabling system software to take appropriate action on reboot. An input/output expansion connector **514** may be provided in the server blade **500** to allow expansion for interfacing with a storage medium, flash memory, etc.

FIG. **6** illustrates a media blade having a connection with a server blade via a midplane according to an embodiment of the present invention. The media blade **150** is a modular component of the modular server system **100**, primarily adapted to carry a mass storage medium device such as a hard disk drive, as a companion to the server blade **110**. However, the media blade **150** may also accommodate any other media devices, such as a graphics processing device, an audio processing device, a streaming media processing device, etc. In the embodiment illustrated in FIG. **6**, the media blade **150** is adapted to support up to two 2.5 inch or 3.5 inch Integrated Drive Electronics (IDE) hard disk drives **610**, **620**. However, the media blade **150** may support any type or number of hard disk drives that are or may become available, of different interface types, and the media blade **150** may contain other processors and devices that provide Redundant Array of Independent Discs (RAID) functionality, and may interconnect with the PCI bus of the corresponding server blade **110**.

Logically, the media blade **150** may lie on the server blade's **110** secondary IDE channel. The hard disk drives **610**, **620** are preferably jumpered for Cable Select (CSEL), a feature that allows CSEL jumpered hard disk drives to automatically assume Drive 0/Drive 1 (Master/Slave) identities when cabled to the appropriate headers on the media blade **150**. The Cable Select feature is built into the printed circuit board (PCB) and not the IDE cables (the cables are identical to one another and provide pin-to-pin contact at each lead).

According to an embodiment of the invention, the midplane input/output connector **650** of the media blade **150** is a CompactPCI form factor interface adapted for connection with a blade interface of the midplane **170**. Similarly, the server blade **110** may include midplane connectors **660**, **670**, **680** that are CompactPCI form factor interfaces adapted for connection with a blade interface of the midplane **170**. The midplane input/output connectors **640**, **660** of the media blade **150** and server blade **110**, respectively, preferably include the secondary IDE channel **640** for communication between the media blade **150** and the server blade **110** through the midplane **170**, or may make use of the CompactPCI bus.

In the embodiment illustrated in FIG. **6**, the media blade **150** includes power sequencing circuitry **630** that causes the hard disk drives **610**, **620** to power up in sequence. This procedure avoids overloading the system with excessive current demands when the hard disk drives' **610**, **620** spindle motors start up.

In summary, the modular server system **100** provides a compact, modular, efficient, and powerful multi-server system that is highly reliable and easy to maintain. The high density of the modular server system **100** reduces real estate costs, and the modular nature of its field replaceable units allows repairs and replacements to be performed quickly and easily.

While the description above refers to particular embodiments of the present invention, it will be understood that many modifications may be made without departing from the spirit thereof. The accompanying claims are intended to cover such modifications as would fall within the true scope and spirit of the present invention. The presently disclosed embodiments are therefore to be considered in all respects as illustrative and not restrictive, the scope of the invention being indicated by the appended claims, rather than the foregoing description, and all changes that come within the meaning and range of equivalency of the claims are therefore intended to be embraced therein.

What is claimed is:

1. A modular server system, comprising:

a midplane having a system management bus and a plurality of blade interfaces on the midplane, wherein the blade interfaces are in electrical communication with each other;

a server blade inserted into one of the plurality of blade interfaces on the midplane, the server blade having a server blade system management bus in electrical communication with the system management bus of the midplane to monitor the midplane and one or more blades received and coupled to the blade interfaces on the midplane, and a network interface to connect to a network; and

a media blade inserted into one of the plurality of blade interfaces on the midplane, the media blade having at least one media device.

2. The system according to claim **1**, further including a power supply module inserted into the midplane to provide power to the modular server system.

3. The system according to claim **1**, further including a cooling fan module coupled to the modular server system to cool the modular server system.

4. The system according to claim **1**, further including at least one switch blade inserted into the midplane adapted to perform network switching.

5. The system according to claim **1**, wherein the midplane is a CompactPCI form factor.

6. The system according to claim **1**, further including a chassis to house the midplane, the server blade, and the media blade.

7. The system according to claim **1**, wherein the server blade and the media blade are adapted to be hot swapped.

8. The system according to claim **1**, wherein the server blade and the media blade in combination form an individual server system.

9. The system according to claim **1**, wherein the network interface is an Ethernet connector jack.

10. The system according to claim **1**, wherein the media device is selected from the group consisting of a storage medium device, a graphics processing device, an audio processing device, and a streaming media processing device.

11. The system according to claim **1**, wherein to monitor comprises monitoring voltages and temperatures.

12. The system according to claim **11**, wherein to monitor further comprises tripping an alarm if one of a voltage or a temperature threshold is exceeded.

13. A modular server system, comprising:

a midplane having a system management bus, a first side, a second side, and a plurality of blade interfaces on the first side and the second side, wherein the blade interfaces on the first side are in electrical communication with the blade interfaces on the second side;

a plurality of server blades each inserted into one of the plurality of blade interfaces on the first side of the midplane, the server blades each having a server blade system management bus in electrical communication with the system management bus of the midplane to monitor the the midplane and one or more blades received and coupled to the blade interfaces on the midplane, and a network interface to connect to a network;

a plurality of media blades each inserted into one of the plurality of blade interfaces on the second side of the midplane, the media blades each having at least one storage medium device;

a power supply module inserted into the midplane to provide power to the modular server system;

a cooling fan module coupled to the modular server system to cool the modular server system; and

a chassis to house the midplane, the server blades, the media blades, the power supply module, and the cooling fan module.

14. The system according to claim **13**, further including least one switch blade inserted into the midplane adapted to perform network switching between any number of the server blades installed in the system.

15. The system according to claim **13**, wherein the midplane is a CompactPCI form factor.

16. The system according to claim **13**, wherein the storage medium device is a hard disk drive.

17. The system according to claim **13**, wherein the server blades and the media blades are adapted to be hot swapped.

18. The system according to claim **13**, wherein at least one of the server blades and at least one of the media blades in combination form an individual server system.

19. The system according to claim **13**, wherein the network interface an Ethernet connector jack.

20. A modular server system, comprising:

a midplane having a system management bus, a first side, a second side, and a plurality of blade interfaces on the first side and the second side, wherein the blade interface on the first side are in electrical communication with the blade interfaces on the second side;

a server blade inserted into one of the plurality of blade interfaces on the first side of the midplane, the server blade having a server blade system management bus in electrical communication with the system management bus of the midplane to monitor the midplane and one or more blades received and coupled to the blade interfaces on the midplane, and a network interface to connect to a network;

a media blade inserted into one of the plurality of blade interfaces on the second side of the midplane, the media blade having at least one storage medium device;

a second server blade inserted into one of the plurality of blade interfaces on the first side of the midplane, the second server blade having a second server blade system management bus in electrical communication with the system management bus of the midplane, and a second network interface to connect to the network

a second media blade inserted into one of the plurality of blade interfaces on the second side of the midplane, the second media blade having at least one second storage medium device;

a power supply module inserted into the midplane to provide power to the modular server system;

a cooling fan module coupled to the modular server system to cool the modular server system; and

a chassis to house the midplane, the server blade, the media blade, the second server blade, the second media

blade, the power supply module, and the cooling fan module, wherein the server blade, the media blade, the second server blade, and the second media blade share power from the power supply module and share cooling from the cooling fan module.

21. The system according to claim **20**, further including at least two switch blades each inserted into the midplane adapted to perform network switching.

22. The system according to claim **20**, wherein the midplane is a CompactPCI form factor.

23. The system according to claim **20**, wherein the storage medium device and the second storage medium device are hard disk drives.

24. The system according to claim **20**, wherein the server blade, the media blade, the second server blade, and the second media blade are adapted to be hot swapped.

25. The system according to claim **20**, wherein the server blade and the media blade in combination form an individual server system.

26. The system according to claim **20**, wherein the second server blade and the second media blade in combination form an individual server system.

27. The system according to claim **20**, wherein die server blade, the second server blade, and the media blade in combination form two individual server systems.

28. The system according to claim **20**, wherein the server blade, the media blade, and the second media blade in combination form an individual server system.

29. The system according to claim **20**, wherein the network interface and the second network interface are Ethernet connector jacks.

30. The system according to claim **10**, wherein the storage medium device is a hard disk drive.

31. A modular server system, comprising:

a midplane including a system management bus and a plurality of blade slots, wherein the blade slots receive and couple blades in communication with each other; and

a slot from among the plurality of blade slots, the slot adapted to receive a server blade including a system management bus, and to couple the server blade system management bus in communication with the midplane system management bus to enable the server blade to monitor the midplane and one or more blades received and coupled to the blade slots on the midplane.

32. The system according to claim **31**, wherein the plurality of blades slots are adapted to hot swap blades.

33. The system according to claim **31** further comprising:

another slot from among the plurality of blade slots to receive a media blade having at least one media device, wherein the other slot is adapted to couple in communication the media blade to a server blade to form an individual server system.

34. The system according to claim **31**, wherein to monitor comprises monitoring voltages and temperatures.

35. The system according to claim **34**, wherein to monitor further comprises tripping an alarm if one of a voltage or a temperature threshold is exceeded.

* * * * *

UNITED STATES PATENT AND TRADEMARK OFFICE

CERTIFICATE OF CORRECTION

PATENT NO. : 6,950,895 B2
DATED : September 27, 2005
INVENTOR(S) : Bottom

It is certified that error appears in the above-identified patent and that said Letters Patent is hereby corrected as shown below:

Column 9,
Line 23, delete “die” and insert -- the --.

Signed and Sealed this

Thirteenth Day of December, 2005

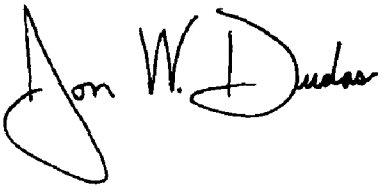

JON W. DUDAS
Director of the United States Patent and Trademark Office