US009332679B2

(12) **United States Patent**
Carl, Jr. et al.

(10) **Patent No.: US 9,332,679 B2**
(45) **Date of Patent: May 3, 2016**

(54) **FAN ASSEMBLY FOR RACK OPTIMIZED SERVER COMPUTERS**

(75) Inventors: **Ralph J. Carl, Jr.**, Clifton Park, NY (US); **Chellappa Balan**, Niskayuna, NY (US); **Patrick B. Lawless**, Pismo Beach, CA (US); **John J. Decker**, Cypress, TX (US)

(73) Assignee: **Xcelaero Corporation**, San Luis Obispo, CA (US)

(*) Notice: Subject to any disclaimer, the term of this patent is extended or adjusted under 35 U.S.C. 154(b) by 735 days.

(21) Appl. No.: **13/566,246**

(22) Filed: **Aug. 3, 2012**

(65) **Prior Publication Data**

US 2013/0044430 A1 Feb. 21, 2013

Related U.S. Application Data

(60) Provisional application No. 61/574,593, filed on Aug. 5, 2011.

(51) **Int. Cl.**

G06F 1/20	(2006.01)
H05K 5/00	(2006.01)
H05K 7/20	(2006.01)

(52) **U.S. Cl.**

CPC ***H05K 7/20772*** (2013.01); ***H05K 7/20145*** (2013.01); ***H05K 7/20172*** (2013.01); ***H05K 7/20554*** (2013.01)

(58) **Field of Classification Search**

CPC H05K 7/20136; H05K 7/20145; H05K 7/20172; H05K 7/20554; H05K 7/20563; H05K 7/20572; H05K 7/20581; H05K 7/20718; H05K 7/20727; H05K 7/20736

USPC 361/679.48–679.5, 694, 695; 312/236; 415/213.1

See application file for complete search history.

(56) **References Cited**

U.S. PATENT DOCUMENTS

5,412,534	A *	5/1995	Cutts et al.	361/695
6,042,474	A *	3/2000	Harvey et al.	454/184
6,504,715	B2 *	1/2003	Ota et al.	361/695
6,808,411	B2 *	10/2004	Chen	F04D 29/601 361/695
7,042,720	B1 *	5/2006	Konshak et al.	361/679.33
2001/0028550	A1 *	10/2001	Miyake et al.	361/695
2003/0223193	A1 *	12/2003	Smith et al.	361/687
2004/0114323	A1 *	6/2004	Mok	361/687
2005/0135060	A1 *	6/2005	Cote	G11B 33/127 361/695
2005/0259393	A1 *	11/2005	Vinson et al.	361/690
2005/0280986	A1 *	12/2005	Coglitore et al.	361/687
2006/0139877	A1 *	6/2006	Germagian et al.	361/695
2007/0171613	A1 *	7/2007	McMahan et al.	361/695
2008/0151490	A1 *	6/2008	Fan	H05K 7/20727 361/679.47
2012/0069514	A1 *	3/2012	Ross	361/679.33
2012/0140406	A1 *	6/2012	Kliewer et al.	361/679.48

* cited by examiner

Primary Examiner — Adam B Dravininkas

(74) *Attorney, Agent, or Firm* — Henry C. Query, Jr.

(57) **ABSTRACT**

A fan assembly for an electrical device which comprises a number of heat generating electrical components mounted in an enclosure that includes a front wall, a rear wall and two generally parallel sidewalls. The fan assembly comprises a plurality of fans which are arranged in a row that extends generally perpendicularly between the sidewalls. Each fan comprises an axis of rotation which is oriented at an angle relative to the sidewalls, and the fan assembly further includes a plurality of inlet plenums which each communicate with an inlet end of a corresponding fan and a plurality of exhaust plenums which each communicate with an outlet end of a corresponding fan. In operation, the fans generate an airflow which is distributed through the enclosure by the inlet and exhaust plenums to thereby cool the electrical components.

55 Claims, 6 Drawing Sheets

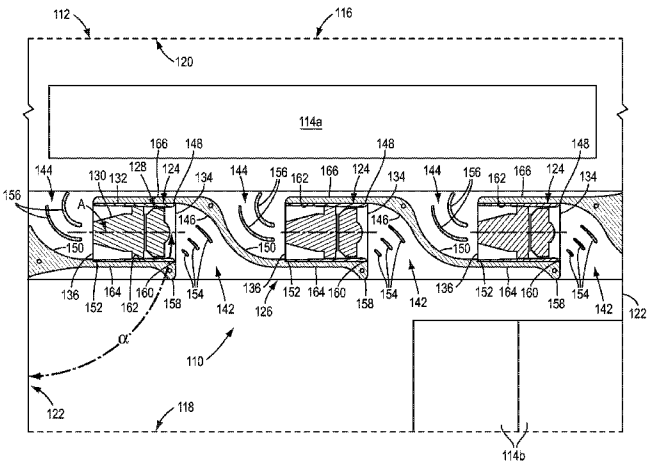

FIG. 1
(Prior Art)

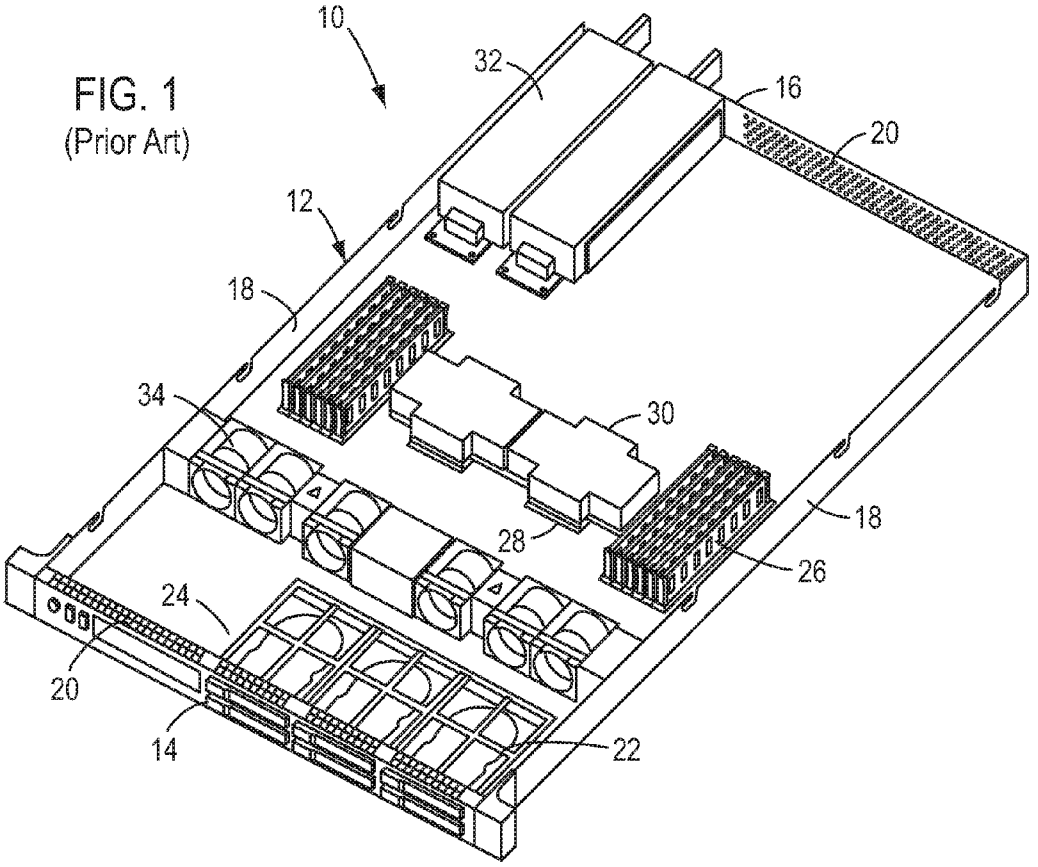

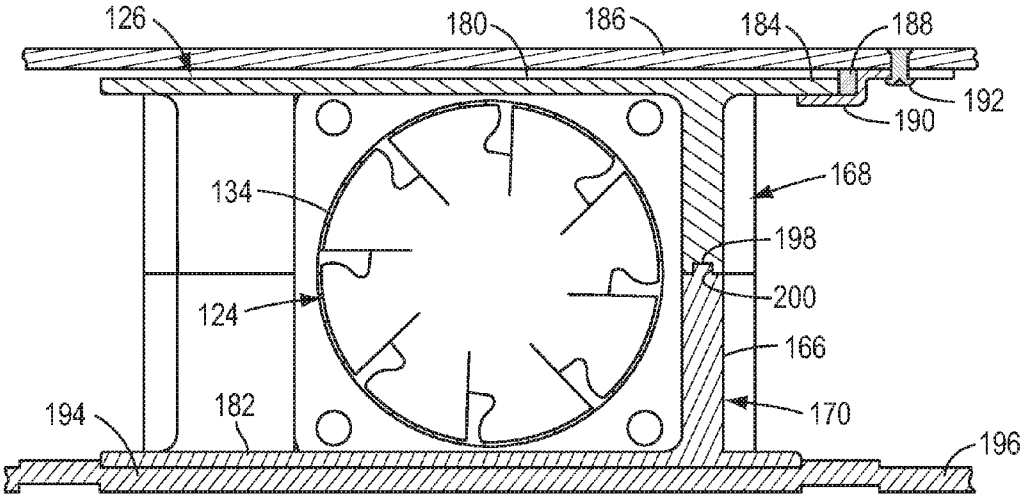

FIG. 5

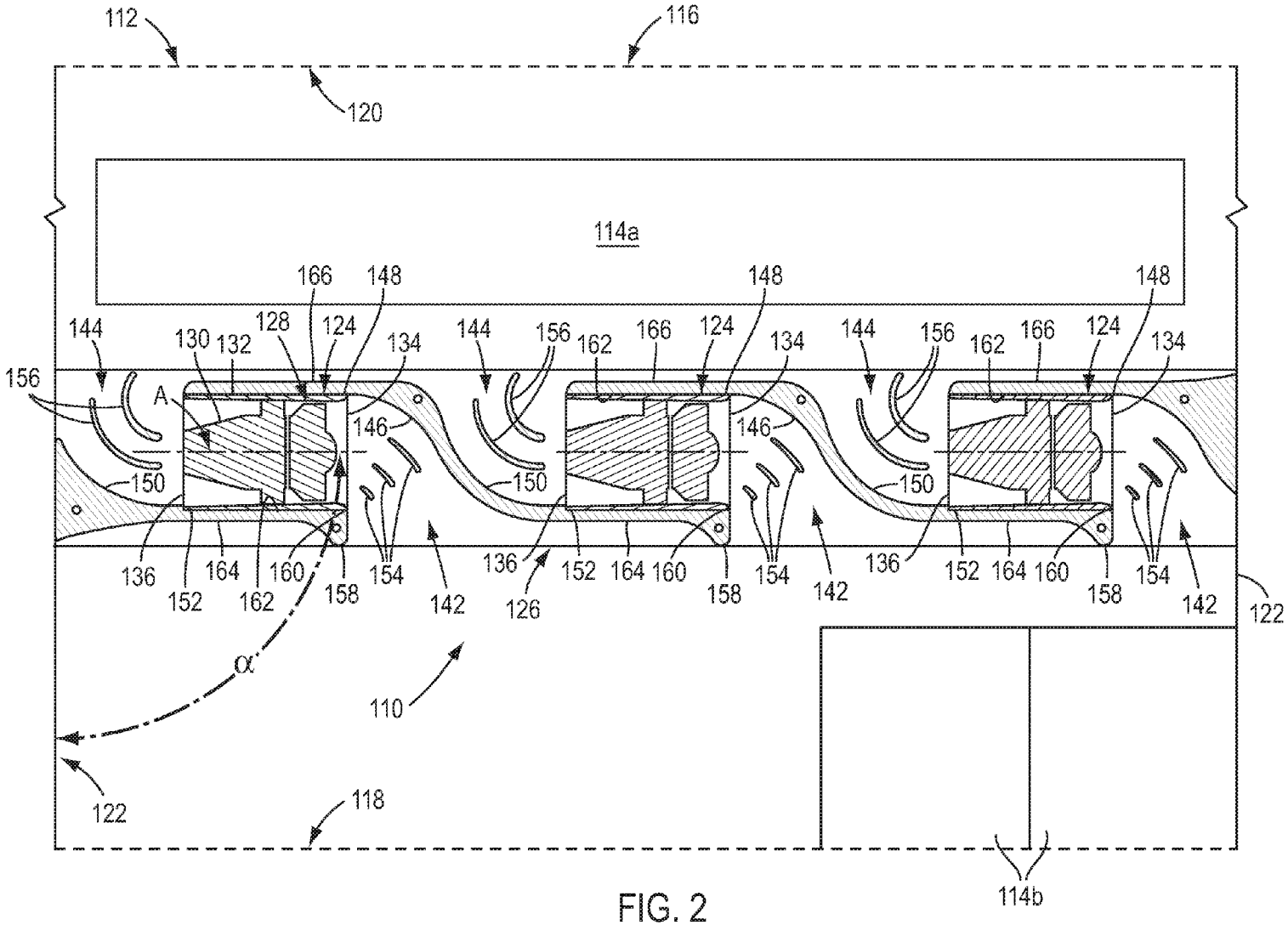
112
116
120
114a
166
148
148
148
144
130
132
128
124
134
144
156
162
166
124
134
144
156
162
166
124
134
156
A
146
146
150
150
150
136
152
164
160
158
154
142
126
α
110
122
118
114b

FIG. 2

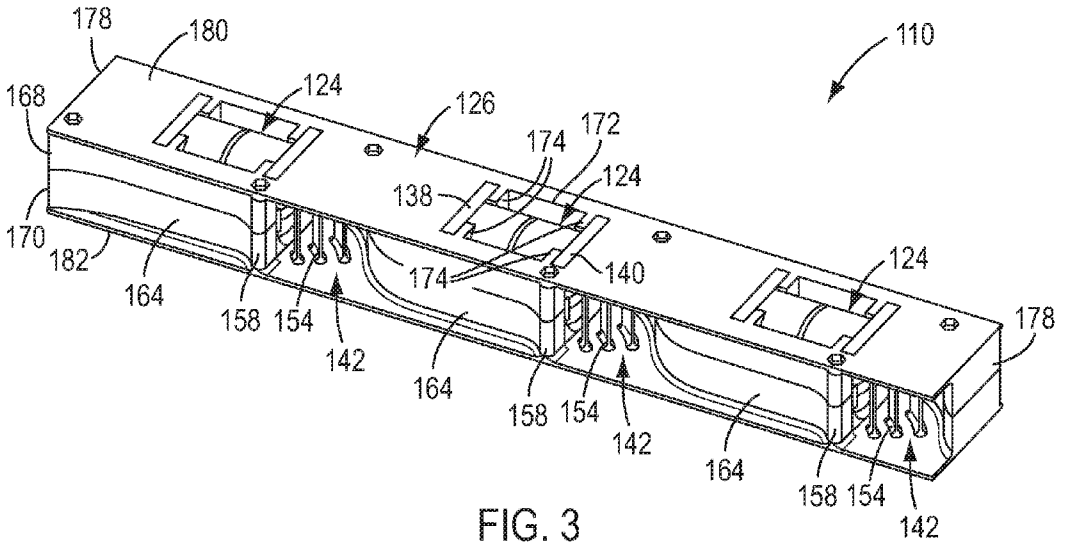
178
180
110
168
124
126
174
172
124
138
170
182
164
158
154
142
174
140
124
178
164
158
154
142
164
158
154
142

FIG. 3

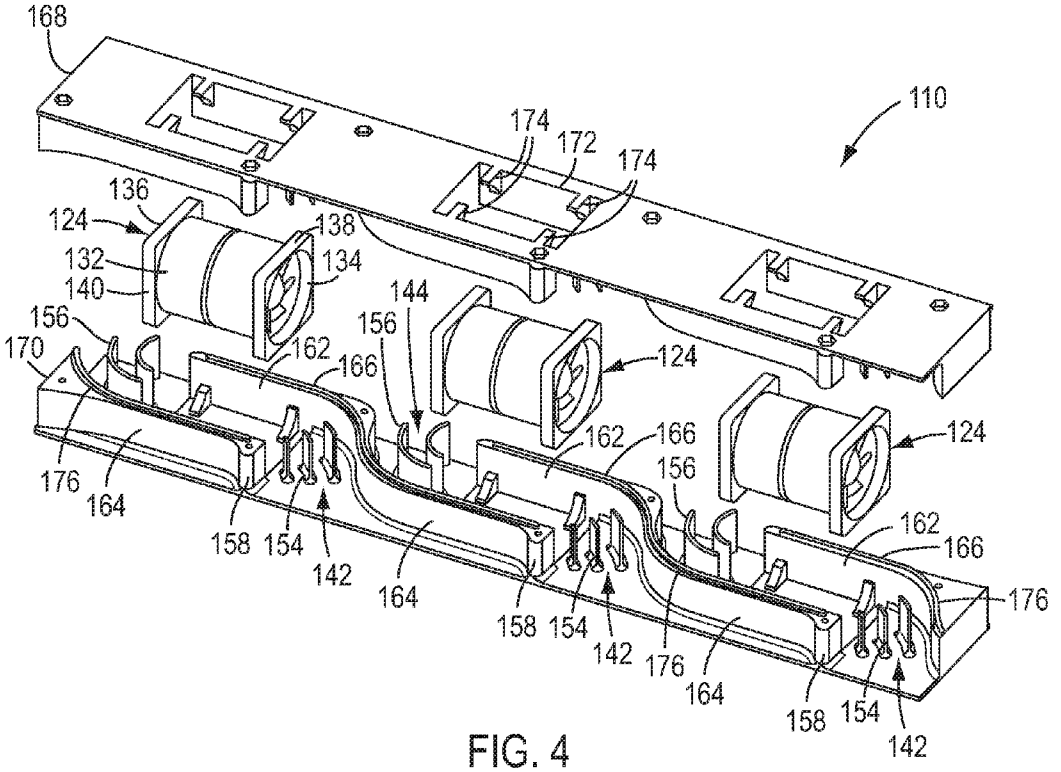
168
110
174
172
174
136
124
138
132
134
140
144
156
156
170
162
166
124
162
166
124
156
176
164
158
154
142
164
158
154
142
176
164
162
166
176
158
154
142

FIG. 4

FIG. 6

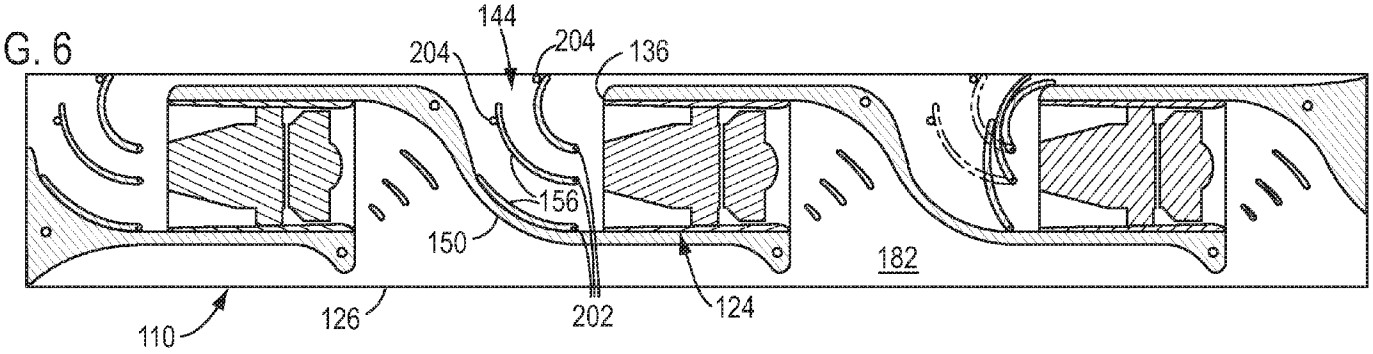

FIG. 7

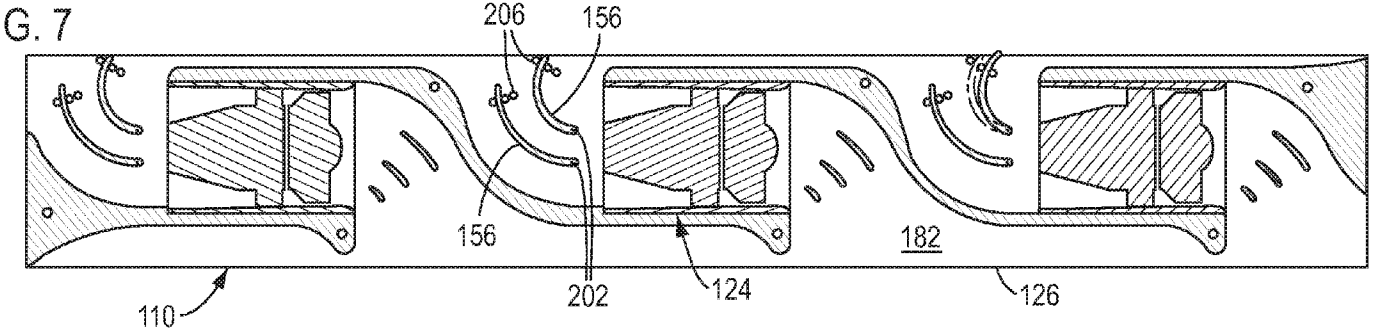

FIG. 8

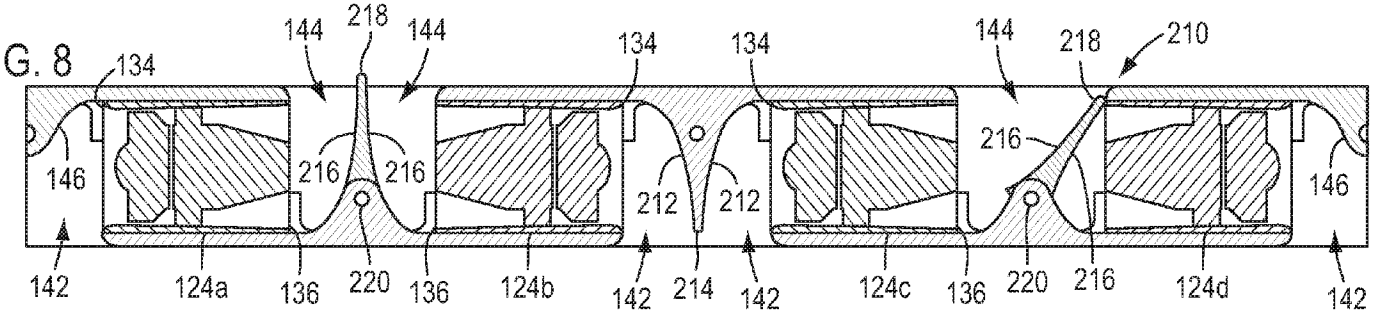

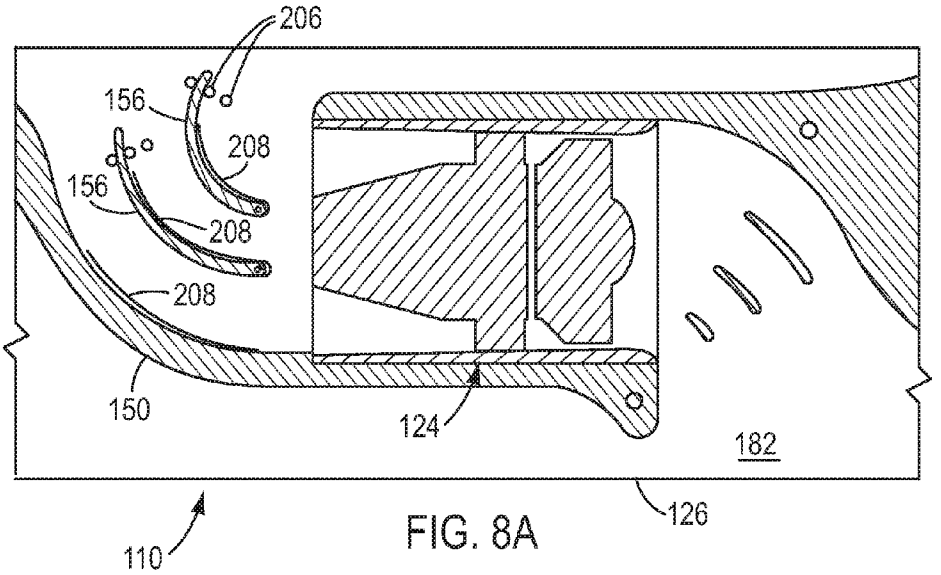
206
156
208
156
208
208
150
124
182
126
110

FIG. 8A

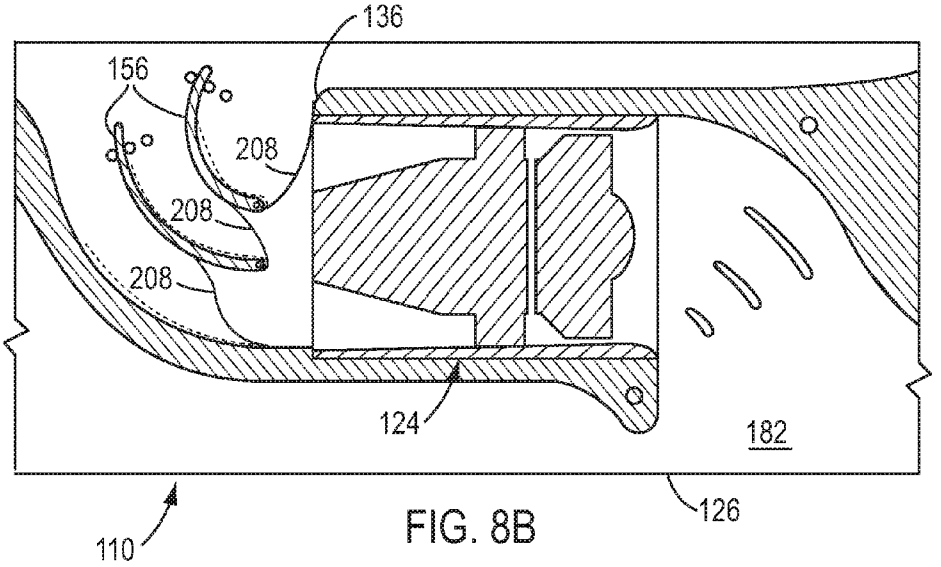
136
156
208
208
208
124
182
126
110

FIG. 8B

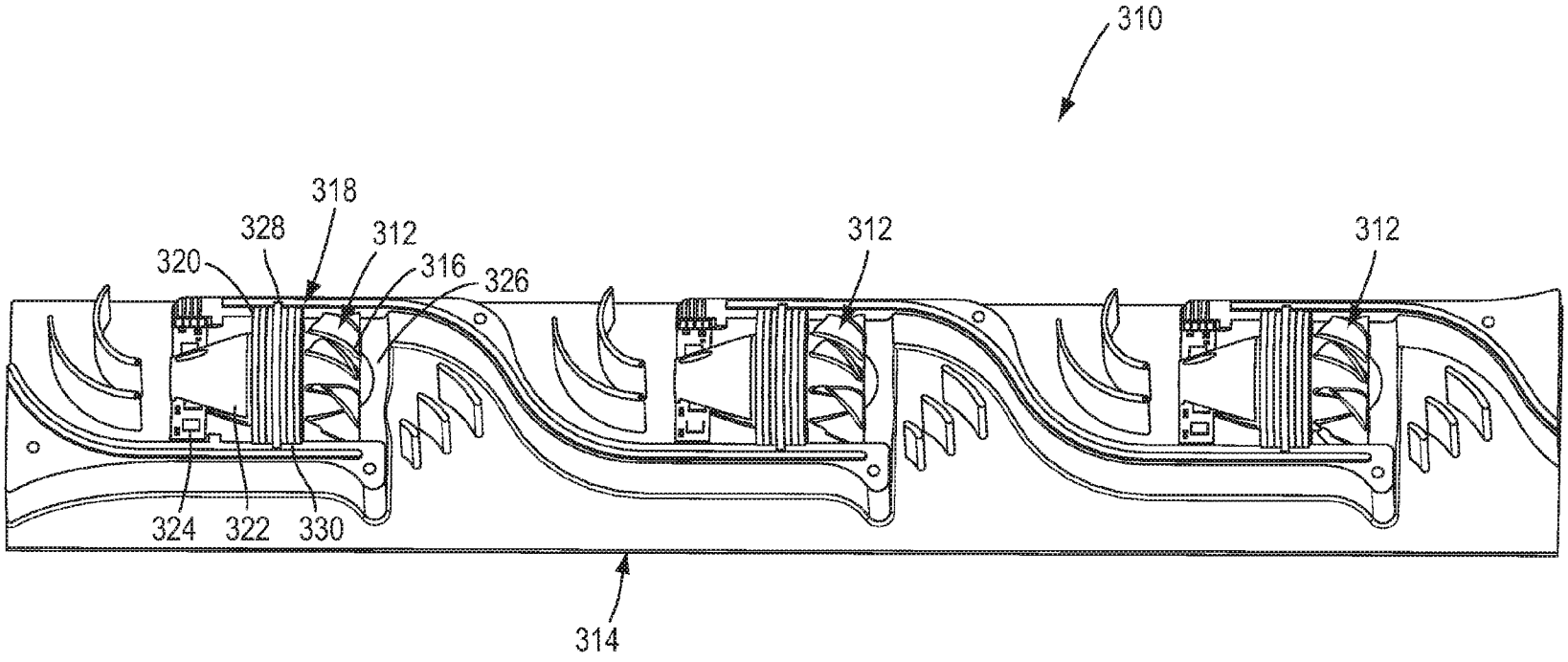

FIG. 10

FAN ASSEMBLY FOR RACK OPTIMIZED SERVER COMPUTERS

This patent application is based on and claims priority from U.S. Provisional Patent Application No. 61/574,593 filed on Aug. 5, 2011.

BACKGROUND OF THE INVENTION

The present invention relates to a fan assembly for cooling an electronic device comprising a plurality of heat generating electrical components mounted in an enclosure, such as a server computer. In particular, the invention relates to a fan assembly comprising a row of fans which are oriented with their axis of rotation at an angle, such as ninety degrees, to the sidewalls of the enclosure. This will enable the fan assembly to deliver a required airflow through the enclosure with fewer fans. The number of fans can be chosen to achieve operation at peak efficiency without concern for the uniformity of the flow across the enclosure, as would be the case if the fans were mounted parallel to the sidewalls.

Prior art server computers typically include a number of heat generating electrical components mounted in an enclosure. Such computers commonly employ air to cool the components. Thus, prior art server computers usually include a number of internal fans for generating an airflow over the components. The airflow cools the components through the process of convection by absorbing the heat generated by the components and then dissipating the heat outside the enclosure.

An example of a prior art server computer is shown in FIG. **1**. This server computer, generally **10**, includes a number of electrical components which in this example are housed in a 1 u rack enclosure **12**. The rack enclosure **12** comprises a front wall **14**, a rear wall **16** and two parallel sidewalls **18**. The front and rear walls each comprise a plurality of holes or apertures **20** through which air can pass. Several of the electrical components generate heat during operation of the server computer **10**, such as a number of disk drives **22** which are located in a drive bay **24**, a plurality of memory modules **26**, two processors **28** (each of which is positioned under a corresponding heat sink **30**), and one or more power supplies **32**. In order to dissipate the heat generated by these components, the server computer **10** also includes a number of fans **34**, in this case six, which are oriented with their axes parallel to the sidewalls **18**. During operation of the server computer **10**, the fans **34** draw air into the enclosure **12** through the apertures in the front wall **14** and force the air over the heat generating components and through the apertures in the rear wall **16**. As the air flows over the components, the heat generated by the components is absorbed by the air to thereby cool the components.

In order to reduce the power consumed by the server computer, it is desirable to tailor the airflow distribution over the components so that each component will receive the airflow required to cool the component sufficiently. The current state of the art requires that a number of fans be distributed across the enclosure to provide a uniform airflow over all of the components, as well as to provide redundancy in the event one of the fans should stop operating. With the fans oriented parallel to the side ails as shown in FIG. **1**, this often results in the use of a large number of fans operating at less than peak efficiency in order to generate the required airflows over each of the components.

SUMMARY OF THE INVENTION

The present invention addresses these and other limitations in the prior art by providing a fan assembly which requires

fewer fans to achieve a desired airflow distribution over the heat generating components of the server computer while also maintaining redundancy. The fan assembly includes a unique fan tray which is mounted in the enclosure and extends between the sidewalls. A number of fans are positioned in the fan tray with their axes of rotation at an angle to the sidewalls, such as ninety degrees. This orientation provides room within the standard envelope for the fan tray to include an exhaust plenum for each fan through which the airflow generated by that fan is directed. In addition, the fan tray includes a number of specially configured guide vanes which are positioned in each exhaust plenum. The exhaust plenum and guide vanes serve to distribute the airflow across a larger portion of the enclosure than would be the case if the fans were oriented with their axes of rotation parallel to the sidewalls as in the prior art. In addition, should one of the fans stop operating, the airflow distribution generated by one or both of the adjacent fans will be sufficient to cool the components. Thus, the fan assembly of the present invention requires fewer fans than the prior art.

Furthermore, installation effects resulting from having impeller leading edge planes in close proximity to those of other parallel impellers and to external obstructions in the enclosure are greatly mitigated, resulting in less power needed to achieve a given airflow. For example, the power required to produce an airflow of 50 cfm through a 1 u enclosure box was reduced from 30 watts for a prior art fan tray to 20 watts for one embodiment of the present invention. Further, to produce 78 cfm through the same 1 u enclosure, the power was reduced from 80 watts to 50 watts. As a further benefit of the invention, noise produced by the fan tray is reduced. For example in free air the noise produced by three fans operating in parallel is 74.5 dB. For the same three fans configured in a tray as in the present invention, the noise was reduced to 73.5 dB for the same net flow.

These and other objects and advantages of the present invention will be made apparent from the following detailed description with reference to the accompanying drawings. In the drawings, the same reference numbers are used to denote similar components in the various embodiments.

BRIEF DESCRIPTION OF THE DRAWINGS

FIG. **1** is a perspective view of a prior art computer server;

FIG. **2** is a top cross sectional view of one embodiment of the fan assembly of the present invention shown installed in an exemplary server computer, most of the components of which have been removed for clarity;

FIG. **3** is a perspective view of the fan assembly shown in FIG. **2**;

FIG. **4** is an exploded perspective view of the fan assembly shown in FIG. **2**;

FIG. **5** is a partial side cross sectional view of one embodiment of means for sealing the fan assembly to the enclosure of the server computer;

FIG. **6** is a top cross sectional view of another embodiment of the fan assembly of the present invention which comprises one embodiment of a means for preventing the back flow of air through the fan assembly;

FIG. **7** is a top cross sectional view of a further embodiment of the fan assembly of the present invention which comprises an embodiment of a means for adjusting the orientation of the exhaust guide vane components of the invention;

FIG. **8**A is a partial top cross sectional view of another embodiment of the fan assembly of the present invention which comprises both the guide vane adjustment means of

FIG. **7** and second embodiment of the backflow prevention means, with the backflow prevention means shown in the open position;

FIG. **8**B is a view similar to FIG. **8**A, but showing the backflow preventing means in the closed position;

FIG. **9** is a top cross sectional view of yet another embodiment of h fan assembly of the present invention; and

FIG. **10** is a perspective, partial cross sectional view of still another embodiment of the fan assembly of the present invention.

DETAILED DESCRIPTION OF THE INVENTION

The present invention provides an integral assembly of a plurality of fans which can be used to dissipate the heat generated by the electrical components of an electronic device, such as a computer. Although the invention has wide application to a variety of electronic devices, it will be described below in the context of a rack mounted server computer.

Referring to FIG. **2**, one embodiment of the fan assembly of the present invention, generally **110**, is shown installed in a representative server computer **112**, such as a 1 u enterprise class rack optimized server. The server computer **112** includes a number of heat generating electrical components, such as memory modules, processors and power supplies (represented generally by the rectangle **114***a*) located downstream of the fan assembly **110**, and a number of disk drives **114***b* located upstream of the fan assembly. These components are mounted in an enclosure **116** which comprises an air permeable front wall **118**, an air permeable rear wall **120** and two parallel, generally solid sidewalls **122**. As shown in FIG. **2**, the fan assembly **110** extends transversely between the sidewalls **122** and is positioned between the front wall **118** and the electrical components **114**. In operation, the fan assembly **110** generate flow of air which enters the enclosure **116** through the front wall **118**, flows over the electrical components **114** to thereby convectively cool these components, and then exits the enclosure through the rear wall **120**.

Referring also to FIGS. **3** and **4**, the fan assembly **110** includes a number of fans **124**, in this example three, which are mounted in a generally rectangular fan tray **126**. The fans **124** are preferably vane-axial fans, such as the Flurry™ 100 Series vane-axial fan manufactured by Xcelaero Corporation of San Luis Obispo, Calif. In this example, each fan **124** includes an impeller **128** which is driven by a motor **130** that is supported in a cylindrical fan housing **132** defining an inlet end **134** of the fan and an outlet end **136** of the fan. Although not required, the fan housing **132** may also be provided with a generally square inlet end flange **138** which surrounds the inlet end **134** and a generally square outlet end flange **140** which surrounds the outlet end **136**.

As shown most clearly in FIG. **2**, each fan **124** is oriented such that its axis of rotation A forms an angle α with the sidewalls **122**. The angle α is preferably between about 20° and 90°. More preferably, the angle α is between about 45° and 90°. In the embodiment of the invention shown in FIG. **2**, the axis of rotation A of each fan **124** is perpendicular to the sidewalls **122**, i.e., the angle α is 90°. In this manner, the depth of the envelope occupied by the fans **124** is significantly smaller than would be the case if the fans were oriented with their axes of rotation A parallel to the sidewalls **122**.

In order to maintain the air flow generated by the fans **124** generally parallel to the sidewalls **122** of the enclosure **116**, each fan is mounted in the fan tray **126** between an inlet plenum **142** and an exhaust plenum **144**. Each inlet plenum **142** is defined by a generally concave front facing inlet wall section **146** which extends frontward from a rear edge **148** of the inlet end **134** of the fan housing **132**. Similarly, each exhaust plenum **144** is defined by a generally concave rear facing outlet wall section **150** which extends rearward from a forward edge **152** of the outlet end **136** of the fan housing **132**. The function of the inlet plenums **142** is to turn the airflow upstream of the fan assembly **110** into the fans **124**, and the function of the outlet plenums **144** is to turn the airflow exiting the fans into a direction generally parallel to the sidewalls **122** of the enclosure **116**. In this manner, even with the fans **124** mounted with their axis A at an angle α relative to the sidewalls **122**, the fan assembly **110** is still able to achieve a flow distribution which produces a desired degree of cooling for the components **114**.

In designing the inlet and outlet plenums **142**, **144**, the radius R_E of the outlet wall sections **150** is ideally selected so as to obtain a desired pressure recovery in the air flow exiting the fans **124**. The radius R_I of the inlet wall sections **146** may then be determined given the radius R_E, the number of fans **124** in the fan assembly **110**, and the length of the fan tray **126** (which in most cases corresponds to the width of the enclosure **116**). Finally, the radii R_E and R_I may be adjusted empirically to obtain a desired air flow over the components **114**. For example, in an embodiment of a fan assembly which comprises three 1.37-inch diameter Flurry™ Series 100 fans mounted in a fan tray 15.87 inches long and oriented with their axes of rotation perpendicular to the sidewalls, R_I may be about 1.4 inches and R_E may be about 1.4 inches.

In the exemplary embodiment of the invention shown in the drawings, each inlet plenum **142** is provided with a number of optional inlet guide vanes **154** and each exhaust plenum **144** is provided with a number of exhaust guide vanes **156**. The inlet guide vanes **154**, if present, assist the inlet plenum **142** in turning the airflow into the fans **124** and also spread the airflow uniformly across the fan inlet **134**. The inlet guide vanes **154** also serve as finger guards for the fans **124**. In addition to aiding the exhaust plenum **144** in turning the airflow exiting the fans **124** into a direction generally parallel to the sidewalls **122**, the exhaust guide vanes **156** spread the airflow across the components **114**. The exhaust guide vanes **156** also serve to inhibit the backflow of air through a corresponding fan **124** which is not operating. The number and configuration of the inlet and exhaust guide vanes **154**, **156** may be determined empirically for a given fan assembly **110** and server computer **112**.

In addition to the inlet guide vanes **154**, the inventors have discovered that the distribution of the airflow forward of the fan assembly **110** and through the inlet plenum **142** may be improved by providing each inlet plenum with a corresponding inlet lip **158**. As shown most clearly in FIG. **2**, each inlet lip **158** comprises a preferably annular projection which extends frontward from a forward edge **160** of the inlet end **134** of the fan housing **132**. The configuration of the inlet lip **158** may be determined empirically for a given fan assembly **110** and server computer **112**. An optimal geometry for the lip **158** has the lowest power draw and noise for a desired flow through the enclosure **116**.

Referring still to FIGS. **2**-**4**, each fan **124** may be mounted in a respective cavity **162** which is formed in the fan tray **126** between a corresponding pair of generally longitudinal front and rear wall sections **164**, **166**. In this particular embodiment of the invention, the right end (as viewed in FIG. **2**) of each front wall section **164** is connected to or formed integrally with the inlet lip **158** of the adjacent inlet plenum **142**. In addition, the left end (as viewed in FIG. **2**) of each front wall section **164** is connected to or formed integrally with the outlet wall section **150** of the adjacent exhaust plenum **144**,

and the right end (as viewed in FIG. **2**) of each rear wall section **166** is connected to or formed integrally with the inlet wall section **146** of the adjacent inlet plenum **142**. Furthermore, the inlet wall section **146** of the left inlet plenum **142** may be connected to or formed integrally with the outlet wall section **150** of the middle outlet plenum **144**, and the inlet wall section of the middle inlet plenum may be connected to or formed integrally with the outlet wall section of the right outlet plenum. In this manner, each cavity **162**, together with its adjacent inlet and exhaust plenums **142**, **144**, defines a continuous flow path through the fan tray **126** in which a corresponding fan **124** is positioned.

Referring to FIG. **4**, the fan tray **126** may comprise separate top and bottom panels **168**, **170** which when connected together lock the fans **124** in position in their corresponding cavities **162**. The top and bottom panels **168**, **170** may be made of any suitable material, such as plastic, using any appropriate technique, such as injection molding. For the particular shape of fan **124** depicted in the drawings, at least one of the top and bottom panels **168**, **170** may be provided with a rectangular cutout **172** for each fan which comprises the same length as the fan housing **132** and the same width as the end flanges **138**, **140**. In addition, at least one but preferably both of the top and bottom panels **168**, **170** may comprise two longitudinally spaced pairs of struts **174** which are configured to engage the fan housing **132** and preferably also the axial inner portions of the end flanges **138**, **140** to thereby firmly hold each fan **124** in position in the fan tray **126**. In order to ensure that the fan tray **126** provides an airtight boundary between the low pressure side of the enclosure (i.e., the portion of the enclosure upstream of the fan assembly **110**) and the high pressure side of the enclosure (i.e., the portion of the enclosure downstream of the fan assembly), the top panel **168** is ideally sealed to the bottom panel **170** using an appropriate number of suitable gaskets **176** positioned between corresponding halves of the wall sections **146**, **150**, **164**, **166** and preferably also the guide vanes **154**, **156**.

The fan tray **126** is also ideally sealed to the enclosure **116** in order to effectively separate the low pressure side of the enclosure from the high pressure side of the enclosure. In order to facilitate this sealing, the fan tray **126** may comprise generally planar ends **178**, a generally planar top **180** and a generally planar bottom **182** (FIG. **3**). In this manner, the sides **178** may be sealed to the sidewalls **122** of the enclosure **116**, the top **180** may be sealed to the top cover of the enclosure and the bottom **182** may be sealed to the bottom of the enclosure using, for example, one or more appropriately configured gaskets (not shown).

An alternative arrangement for sealing the fan tray **126** to the enclosure **116** is shown in FIG. **5**, which is a side cross sectional view of the fan assembly **110** showing the inlet end **134** of one of the fans **124**. In this embodiment, the top **180** of the fan tray **126** includes a downstream-side lip **184** which is sealed to a removable top cover **186** of the enclosure **116** with a straight seal **188**. The seal **188** may be positioned in an elongated seal support bracket **190** which is secured to the top cover **186** by appropriate means, such as a number of rivets **192**. In addition, the bottom **182** of the fan tray **126** may be received in a corresponding recess **194** which is formed in a bottom **196** of the enclosure **116**.

FIG. **5** also illustrates another means for sealing the top panel **168** to the bottom panel **170**. In this embodiment, a labyrinth seal is created between these components by forming a projection **198** on the upper edge of the bottom panel **170** which is received in a corresponding groove **200** that is formed on the bottom edge of the upper panel **168**, or vice-versa. The projection **198** and groove **200** may be formed on corresponding halves of the wall sections **146**, **150**, **164**, **166** and preferably also the guide vanes **154**, **156**.

With the fan tray **126** separating the high pressure side of the enclosure **116** from the low pressure side, it is desirably to include means for preventing the backflow of air through the fan assembly **110** should one or more of the fans **124** cease operating. Referring to FIG. **6**, for example, an embodiment of the fan assembly **110** is shown in which the exhaust guide vanes **156** are configured to function as a one-way valve for their corresponding exhaust plenums **144**. In this embodiment, the upstream end of each exhaust guide vane **156** is connected by a corresponding pivot member **202** to the top **178** or bottom **182**, or both, of the fan tray **126** to thereby enable the exhaust guide vanes to swing toward and away from the downstream end **136** of a corresponding fan **124**. In addition, the fan tray **126** may be provided with a corresponding stop member for each exhaust guide vane **156** to prevent the guide vane from swinging past its appropriate position when the fan **124** is operating. For example, the stop members for the exhaust guide vanes **156** located adjacent the outlet wall sections **150** may simply be the outlet wall sections themselves, while the stop members for each of the remaining exhaust guide vanes may comprise a small protrusion **204** which is formed on the top **178** or the bottom **182**, or both, of the fan tray **126**. Thus, under normal operation of the fans **124**, the air flow will force the exhaust guide vanes **156** into their open position against the stop members. However, when one of the fans **124** stops operating, the initial backflow of air will force its corresponding guide vanes **156** into the closed position, which is shown for the right-most fan in FIG. **6**. In this regard, the closing of the guide vanes **156** may be facilitated by a suitable spring member (not shown), such as a torsion sprang which is connected between the pivot **202** and its corresponding guide vane.

In another embodiment of the invention which is shown in FIG. **7**, the fan assembly **110** is provided with means for enabling the orientation of the exhaust guide vanes **156** to be adjusted. In this embodiment, the upstream end of each exhaust guide vane **156** is connected by a corresponding pivot member **202** to the top **178** or bottom **182**, or both, of the fan tray **126**. In addition, for each exhaust guide vane **156** the fan tray **126** comprises a series of detents **206** which are formed on the top **178** or the bottom **182**, or both, of the fan tray **126**. Thus, the orientation of each exhaust guide vane **156** can be adjusted by pivoting the guide vane to a desired position between an adjacent pair of detents **206**. In this manner, the orientation of the exhaust guide vanes **156** can be set during installation of the fan assembly **110**, which thus allows one set of top and bottom panels **168**, **170** to be used in a wide variety of applications.

An embodiment of the fan assembly **110** in which the backflow prevention means of the present invention is combined with the guide vane adjustment means just described is illustrated in FIGS. **8**A and **8**B. In this embodiment, a flexible membrane **208** is attached by suitable means to the upstream end of each exhaust guide vane **156**. The membranes may made of a plastic such as acetate and comprise a rectangular configuration having a height which is sufficient to extend completely between the top **179** and bottom **182** of the fan tray **126**. In normal operation of each fan **124**, the membranes **208** are forced by the airflow into the open position shown in FIG. **8**A against their corresponding guide vanes **156**. As shown in FIG. **8**B, however, when one of the fan **124** stops operating, the backflow of air forces the membranes **208** to fold back against the adjacent guide vanes **156** or the downstream end **136** of the fan to thereby block the backflow.

FIGS. **8**A and **8**B also illustrate the pivot members **202** and detents **206** which enable each exhaust guide vane to be oriented as desired.

Yet another embodiment of the fan assembly of the present invention is shown in FIG. **9**. The fan assembly of this embodiment, generally **210**, is similar in many respects to the fan assembly **110** described above. Thus, the fan assembly **210** includes a plurality of fans **124**, in this case four, which are mounted in a fan tray **126** that is positioned in the server computer **112** between the sidewalls **122** of the enclosure **116** (not shown). In this embodiment, however, the fans **124** are oriented such that the inlet ends **134** and outlet ends **136** of adjacent fans face each other. For example, the first and second fans **124***a*, **124***b* (starting from the left side of the fan assembly **210**) are oriented with their outlet ends **136** facing each other, the second and third fans **124***b*, **124***c* are oriented with their inlet ends **134** facing each other, and the third and fourth fans **124***c*, **124***d* are oriented with their outlet ends facing each other.

Also, although the inlet plenums **142** for the first and fourth fans **24** are each defined by a generally concave front facing inlet wall section **146** as described above, the inlet plenums for the second and third fans are each defined by a respective generally concave front facing inlet wall section **212** which is formed on a corresponding side of an inlet plenum arm **214** that is positioned approximately midway between the fans. In a similar fashion, the exhaust plenums **144** are each defined by a respective generally concave rear facing outlet wall section **216** which is formed on a corresponding side of one of two exhaust plenum arms **218**, one of which is positioned approximately midway between the first and second fans **124***a*, **124***b* and the other of which is positioned approximately midway between the third and fourth fans **124***c*, **124***d*. Also, each outlet plenum arm **218** may be pivotally connected to the fan tray **126** by a transverse pivot bar **220** or other such means in order to allow it to automatically pivot into a blocking position over the outlet end **136** of one of the adjacent fans **124** to thereby prevent the backflow of air through the corresponding exhaust plenum **144** when that fan is not operating.

A further embodiment of the invention is shown in FIG. **10**. Similar to the previous embodiments, the fan assembly of this embodiment, generally **310**, includes a plurality of fans **312** mounted in a single fan tray **314**, the top panel of which has been omitted for clarity. In this embodiment, each fan **312** comprises an impeller **316**, a motor (not visible) which is positioned axially downstream of the impeller, and an outlet guide vane assembly **318** which surrounds the motor. The outlet guide vane assembly **318** includes a hub (not shown) which is connected to or formed integrally with the motor, an outer ring member **320** which is positioned coaxially with the hub, and a plurality of outlet guide vanes (not shown) which extend radially between the hub and the ring member. Each fan **312** may also include a diffuser tube **322** which is connected to the downstream end of the motor and a number of support struts **324** which extend radially between the diffuser tube and the fan tray **314**.

In contrast to the previous embodiments, in the present embodiment the fans **312** do not comprise separate fan housings. Instead, the fans **312** are mounted directly in the fan tray **314**. In this manner, the portions of the fan tray **314** adjacent the fans **312** in effect function as housings for the fans which define respective flow paths through the fan tray. As shown in FIG. **10**, the outer ring member **320** of the outlet guide vane assembly **318** is mounted in a cavity **326** formed in the fan tray **314** between the front and rear wall sections **164**, **166**. The outer ring member **320** may include a radial flange **328** which is received in a corresponding groove to help secure the fan **312** in the fan tray **314**. A number of elastic elements **330**, such as rubber O-rings, may be mounted coaxially around the outer ring member **320** to help isolate the vibrations produced by the fan **312** from the fan tray **314**. By incorporating the flow path typically formed by the fan housing directly into the fan tray **314**, greater flexibility exists in optimizing the flow path within the footprint available for the fan tray and for isolating the vibrations produced by the motor from the tray.

It should be recognized that, while the present invention has been described in relation to the preferred embodiments thereof, those skilled in the art may develop a wide variation of structural and operational details without departing from the principles of the invention. Therefore, the appended claims are to be construed to cover all equivalents falling within the true scope and spirit of the invention.

What is claimed is:

1. A fan assembly for an electrical device which comprises a number of heat generating electrical components mounted in an enclosure that includes a front wall, a rear wall and two generally parallel sidewalls, the fan assembly comprising:

a plurality of vane-axial fans which are arranged in a row that extends generally perpendicularly between the sidewalls, each fan comprising an inlet end, an outlet end and an axis of rotation which is oriented at an angle relative to the sidewalls, the inlet and outlet ends being axially aligned with the axis of rotation and the fan being operable to generate an airflow which enters the inlet end and exits the outlet end;

a plurality of inlet plenums, each of which communicates with the inlet end of a corresponding fan;

a plurality of exhaust plenums, each of which communicates with the outlet end of a corresponding fan, each exhaust plenum being configured to turn the airflow in a direction which diverges from the axis of rotation of the fan;

wherein the airflow is distributed by the inlet and exhaust plenums through the enclosure to thereby cool the electrical components; and

wherein the axis of rotation of each fan is oriented at an angle of between about 20° and 90° relative to the sidewalls.

2. The fan assembly of claim **1**, wherein the axis of rotation of each fan is orientated at an angle of between about 45° and 90° relative to the sidewalls.

3. The fan assembly of claim **1**, further comprising a generally rectangular fan tray in which the fans are mounted and in which the inlet and exhaust plenums are formed.

4. The fan assembly of claim **3**, wherein each inlet plenum is defined by a generally concave let wall section which extends frontward from a rear edge of the inlet end of the fan.

5. The fan assembly of claim **4**, wherein each exhaust plenum is defined by a generally concave outlet wall section which extends rearward from a forward edge of the outlet end of the fan.

6. The fan assembly of claim **5**, wherein the inlet wall section of at least one fan is formed integrally with the outlet wall section of an adjacent fan.

7. The fan assembly of claim **6**, wherein each fan is mounted in the fan tray between a corresponding pair of generally longitudinal front and rear wall sections.

8. The fan assembly of claim **7**, wherein the downstream end of the front wall section of each fan is connected to or formed integrally with the outlet wall section of the exhaust plenum for that fan.

9. The fan assembly of claim 8, wherein the upstream end of the rear wall section of each fan is connected to or formed integrally with the inlet wall section of the inlet plenum for that fan.

10. The fan assembly of claim 7, wherein each inlet plenum comprises a corresponding inlet lip which extends frontward from the upstream edge of the front wall section.

11. The fan assembly of claim 3, further comprising a number of inlet guide vanes which are positioned in each inlet plenum.

12. The fan assembly of claim 3, further comprising a number of exhaust guide vanes which are positioned in each exhaust plenum.

13. The fan assembly of claim 12, further comprising means for enabling the orientation of each exhaust guide vane to be adjusted.

14. The fan assembly of claim 13, wherein the adjustment enabling means comprises a pivot member which connects the upstream end of each exhaust guide vane to the fan tray.

15. The fan assembly of claim 14, wherein the adjustment enabling means further comprises a series of detents which are formed on at least one of a top or a bottom of the fan tray.

16. The fan assembly of claim 3, wherein the fan tray comprises separate top and bottom panels.

17. The fan assembly of claim 16, wherein the top panel is sealed to the bottom panel.

18. The fan assembly of claim 3, wherein the fan tray is sealed to the enclosure to thereby define a low pressure side of the enclosure located between the fan tray and the front wall and a high pressure side of the enclosure located between the fan tray and the rear wall.

19. The fan assembly of claim 3, further comprising means for preventing the backflow of air through the fan assembly.

20. The fan assembly of claim 19, wherein the backflow preventing means comprises a number of exhaust guide vanes which are positioned in each exhaust plenum.

21. The fan assembly of claim 20, wherein an upstream end of each exhaust guide vane is pivotally connected to the fan tray to thereby enable the exhaust guide vane to swing toward and away from the downstream end of a corresponding fan.

22. The fan assembly of claim 21, wherein the backflow preventing means further comprises a corresponding stop member for each exhaust guide vane to prevent the guide vane from swinging away from the downstream end of the fan beyond a desired position.

23. The fan assembly of claim 22, wherein each stop member comprises a protrusion which is formed on at least one of a top or a bottom of the fan tray.

24. The fan assembly of claim 20, wherein the backflow preventing means comprises a flexible membrane which is attached to an upstream end of each exhaust guide vane.

25. The fan assembly of claim 3, wherein a first fan and an adjacent second fan are oriented such that their corresponding inlet ends face each other, and wherein a third fan adjacent the second fan is oriented such that its outlet end faces the outlet end of the second fan.

26. The fan assembly of claim 25, herein the inlet plenums for the first and second fans are defined by an inlet plenum arm which is positioned between the first and second fans.

27. The fan assembly of claim 25, wherein the exhaust plenums for the second and third fans are defined by an exhaust plenum arm which is positioned between the second and third fans.

28. The fan assembly of claim 27, wherein the outlet plenum arm is pivotally connected to the fan tray.

29. The fan assembly of claim 3, wherein each fan comprises an impeller which is driven by a motor that is supported in a fan housing, and wherein the fan housing is mounted in the fan tray between the inlet and exhaust plenums.

30. The fan assembly of claim 3, wherein each fan comprises an impeller which is driven by a motor that is supported in an outlet guide van assembly having an outer ring member, and wherein the outer ring member is mounted in the fan tray between the inlet and outlet plenums.

31. The fan assembly of claim 30, further comprising a number of resilient rings which are positioned coaxially between the outer ring member and the fan tray to isolate the fan tray from vibrations generated by the fan.

32. In an electrical device which comprises a number of heat generating electrical components mounted in an enclosure having a front wall, a rear wall and two generally parallel sidewalls, the improvement comprising a fan assembly for generating an airflow through the enclosure which enters through or adjacent the front wall and exits through or adjacent the rear wall, the fan assembly comprising:

a plurality of vane-axial fans which are arranged in a row that extends generally perpendicularly between the sidewalls, each fan comprising an inlet end, an outlet end and an axis of rotation which is oriented at an angle of between about 20° and 90° relative to the sidewalk, the inlet and outlet ends being axially aligned with the axis of rotation and the fan being operable to generate an airflow which enters the inlet end and exits the outlet end;

a plurality of inlet plenums, each of which communicates between the inlet end of a corresponding fan and a portion of the enclosure located between the fans and the front wall; and

a plurality of exhaust plenums, each of which communicates between the outlet end of a corresponding fan and a portion of the enclosure located between the fans and the rear wall, each exhaust plenum being configured to turn the airflow in a direction which diverges from the axis of rotation of the fan;

wherein the airflow is distributed by the inlet and exhaust plenums through the enclosure to thereby cool the electrical components.

33. The electrical device of claim 32, further comprising a generally rectangular fan tray which extends perpendicularly between the sidewalls, wherein the fan tray comprises the inlet and exhaust plenums and each fan is mounted in the fan tray between a corresponding pair of inlet and exhaust plenums.

34. The electrical device of claim 33, wherein each inlet plenum comprises a generally concave inlet wall section which extends frontward from a rear edge of the inlet end of the fan.

35. The electrical device of claim 33, wherein each exhaust plenum comprises a generally concave outlet wall section which extends rearward from a forward edge of the outlet end of the fan.

36. The electrical device of claim 35, wherein the inlet wall section of at least one fan is connected to or formed integrally with the outlet wall section of an adjacent fan.

37. The electrical device of claim 36, wherein each fan is mounted in the fan tray between a corresponding pair of generally longitudinal front and rear wall sections.

38. The electrical device of claim 37, wherein the downstream end of the front wall section of each fan is connected to or formed integrally with the outlet wall section of the exhaust plenum of that fan.

39. The electrical device of claim **38**, wherein the upstream end of the ear wall section of each fan is connected to or formed integrally with the inlet wall section of the inlet plenum of that fan.

40. The electrical device of claim **39**, wherein each inlet plenum comprises a corresponding inlet lip which extends frontward from the upstream edge of the front wall section.

41. The electrical device of claim **33**, wherein each inlet plenum comprises a number of inlet guide vanes.

42. The electrical device of claim **33**, wherein each exhaust plenum comprises a number of exhaust guide vanes.

43. The fan assembly of claim **42**, wherein the orientation of at least one exhaust guide vane of at least one exhaust plenum relative to the outlet end of the fan is adjustable.

44. The fan assembly of claim **43**, wherein the upstream end of the at least one exhaust guide vane is pivotally connected to the fan tray.

45. The electrical device of claim **33**, further comprising means for preventing the backflow of air through the fans.

46. The electrical device of claim **45**, wherein the backflow preventing means comprises a number of exhaust guide vanes which are positioned in each exhaust plenum.

47. The fan assembly of claim **46**, wherein an upstream end of each exhaust guide vane is pivotally connected to the fan tray to thereby enable the exhaust guide vane to swing toward and away from the downstream end of a corresponding fan.

48. The fan assembly of claim **47**, wherein the backflow preventing means further comprises a corresponding stop member for each exhaust guide vane to prevent the guide vane from swinging away from the downstream end of the fan beyond a desired position.

49. The fan assembly of claim **46**, wherein the backflow preventing means comprises a flexible membrane which is attached to an upstream end of each exhaust guide vane.

50. The fan assembly of claim **33**, wherein a first fan and an adjacent second fan are oriented such that their corresponding inlet ends face each other, and wherein a third fan adjacent the second fare is oriented such that its outlet end faces the outlet end of the second fan.

51. The fan assembly of claim **50**, wherein the inlet plenums for the first and second fans are defined by an inlet plenum r which is positioned between the first and second fans.

52. The fan assembly of claim **50**, wherein the exhaust plenums for the second and third fans are defined by an exhaust plenum arm which is positioned between the second and third fans.

53. The fan assembly of claim **52**, wherein the outlet plenum arm is pivotally connected to the fan tray.

54. The electrical device of claim **33**, wherein each fan comprises an impeller which is driven by a motor that is supported in a fan housing, and wherein the fan housing is mounted in the fan tray between the inlet and exhaust plenums.

55. The electrical device of claim **33**, wherein each fan comprises an impeller which is driven by a motor that is supported in an outlet guide van assembly, and wherein the outlet guide vane assembly is mounted directly in the fan tray between the inlet and outlet plenums.

* * * * *