US009123445B2

(12) **United States Patent**
Ellis et al.

(10) **Patent No.: US 9,123,445 B2**
(45) **Date of Patent: Sep. 1, 2015**

(54) **STORAGE CONTROL SYSTEM WITH DATA MANAGEMENT MECHANISM AND METHOD OF OPERATION THEREOF**

(71) Applicant: **SMART Storage Systems, Inc.**, Chandler, AZ (US)

(72) Inventors: **Robert W. Ellis**, Phoenix, AZ (US); **James Fitzpatrick**, Sudbury, MA (US); **Mark Dancho**, Chandler, AZ (US); **Michelle Martin**, Westford, MA (US)

(73) Assignee: **SMART STORAGE SYSTEMS, INC.**, Milpitas, CA (US)

(*) Notice: Subject to any disclaimer, the term of this patent is extended or adjusted under 35 U.S.C. 154(b) by 202 days.

(21) Appl. No.: **13/746,542**

(22) Filed: **Jan. 22, 2013**

(65) **Prior Publication Data**

US 2014/0208174 A1 Jul. 24, 2014

(51) **Int. Cl.**

G11C 29/50	(2006.01)
G06F 11/10	(2006.01)
G11C 16/26	(2006.01)
G11C 29/54	(2006.01)
G11C 29/56	(2006.01)
G11C 29/48	(2006.01)
G11C 16/04	(2006.01)

(52) **U.S. Cl.**

CPC ***G11C 29/50004*** (2013.01); ***G06F 11/1048*** (2013.01); ***G11C 16/26*** (2013.01); *G11C 16/04* (2013.01); *G11C 29/48* (2013.01); *G11C 29/50* (2013.01); *G11C 29/56* (2013.01)

(58) **Field of Classification Search**

CPC .. G11C 29/50004; G11C 16/26; G11C 29/56; G11C 29/48; G11C 29/50; G11C 16/04; G06F 11/1048

See application file for complete search history.

(56) **References Cited**

U.S. PATENT DOCUMENTS

4,048,481	A	9/1977	Bailey, Jr. et al.
4,839,587	A	6/1989	Flatley et al.
5,034,744	A	7/1991	Obinata
5,210,854	A	5/1993	Beaverton et al.
5,311,395	A	5/1994	McGaha et al.
5,450,354	A	9/1995	Sawada et al.
5,479,638	A	12/1995	Assar et al.
5,784,174	A	7/1998	Fujino et al.
5,790,828	A	8/1998	Jost

(Continued)

FOREIGN PATENT DOCUMENTS

EP	1 956 489	A2	8/2008
EP	1 990 921	A2	11/2008

(Continued)

OTHER PUBLICATIONS

Ulinktech, "ATA Command Table (in Alphabetic Order)," Feb. 6, 2011, https://web.archive.org/web/20110206060820/http://www.ulinktech.com/downloads/AT, 6 pages.

(Continued)

Primary Examiner — April Y Blair
Assistant Examiner — Dipakkumar Gandhi
(74) *Attorney, Agent, or Firm* — Morgan, Lewis & Bockius LLP

(57) **ABSTRACT**

A method of operation of a storage control system includes: determining a bit error rate of a page; calculating a slope based on the bit error rate; and adjusting a threshold voltage for the page based on the slope for reading a memory device.

19 Claims, 5 Drawing Sheets

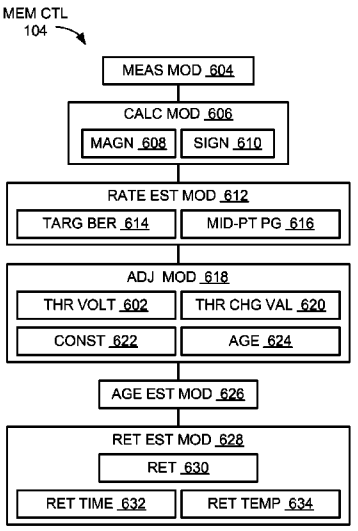

(56) **References Cited**

U.S. PATENT DOCUMENTS

5,930,504 A 7/1999 Gabel
5,949,785 A 9/1999 Beasley
5,963,983 A 10/1999 Sakakura et al.
6,069,827 A 5/2000 Sinclair
6,091,652 A 7/2000 Haehn et al.
6,275,436 B1 8/2001 Tobita et al.
6,345,367 B1 2/2002 Sinclair
6,356,447 B2 3/2002 Scafidi
6,381,670 B1 4/2002 Lee et al.
6,412,080 B1 6/2002 Fleming et al.
6,529,997 B1 3/2003 Debiez et al.
6,552,581 B1 4/2003 Gabara
6,587,915 B1 7/2003 Kim
6,618,249 B2 9/2003 Fairchild
6,661,503 B1 * 12/2003 Yamaguchi et al. 356/73.1
6,728,913 B1 4/2004 Parker
6,763,424 B2 7/2004 Conley
6,775,792 B2 8/2004 Ulrich et al.
6,778,387 B2 8/2004 Fairchild
6,850,443 B2 2/2005 Lofgren et al.
6,854,070 B2 2/2005 Johnson et al.
6,871,304 B2 * 3/2005 Hadjihassan et al. 714/704
6,903,972 B2 6/2005 Lasser et al.
6,906,961 B2 6/2005 Eggleston et al.
6,975,028 B1 12/2005 Wayburn et al.
7,082,495 B2 7/2006 DeWhitt et al.
7,107,389 B2 9/2006 Inagaki et al.
7,139,864 B2 11/2006 Bennett et al.
7,233,497 B2 6/2007 Simon et al.
7,243,186 B2 7/2007 Liang et al.
7,298,888 B2 * 11/2007 Hamar 382/151
7,330,927 B1 2/2008 Reeve et al.
7,333,364 B2 2/2008 Yu et al.
7,350,101 B1 3/2008 Nguyen et al.
7,355,896 B2 4/2008 Li et al.
7,434,122 B2 10/2008 Jo
7,441,067 B2 10/2008 Gorobets et al.
7,516,267 B2 4/2009 Coulson et al.
7,613,871 B2 11/2009 Tanaka et al.
7,620,710 B2 11/2009 Kottomtharayil et al.
7,620,769 B2 11/2009 Lee et al.
7,639,532 B2 12/2009 Roohparvar et al.
7,661,054 B2 2/2010 Huffman et al.
7,679,948 B2 3/2010 Park et al.
7,693,422 B2 * 4/2010 Alicherry et al. 398/58
7,738,502 B2 6/2010 Chang et al.
7,743,216 B2 6/2010 Lubbers et al.
7,818,525 B1 10/2010 Frost et al.
7,827,348 B2 11/2010 Lee et al.
7,830,164 B2 11/2010 Earle et al.
7,979,614 B1 7/2011 Yang
8,001,135 B2 8/2011 Perlmutter et al.
8,010,738 B1 8/2011 Chilton et al.
8,028,123 B2 9/2011 Kilzer et al.
8,046,645 B2 10/2011 Hsu et al.
8,051,241 B2 11/2011 Feldman et al.
8,072,805 B2 12/2011 Chou et al.
8,095,724 B2 1/2012 Ji et al.
8,095,765 B2 1/2012 Asnaashari et al.
8,117,396 B1 2/2012 Fair et al.
8,127,202 B2 2/2012 Cornwell et al.
8,145,984 B2 3/2012 Sommer et al.
8,154,921 B2 4/2012 Mokhlesi et al.
8,169,825 B1 5/2012 Shalvi et al.
8,209,677 B2 6/2012 Shintani et al.
8,219,724 B1 7/2012 Caruso et al.
8,219,776 B2 7/2012 Forhan et al.
8,228,701 B2 7/2012 Sokolov et al.
8,245,101 B2 8/2012 Olbrich et al.
8,250,621 B2 8/2012 Cha
8,254,172 B1 8/2012 Kan
8,259,506 B1 9/2012 Sommer et al.
8,289,801 B2 10/2012 Smith et al.
8,296,534 B1 10/2012 Gupta et al.
8,332,578 B2 12/2012 Frickey, III et al.
8,363,413 B2 1/2013 Paquette et al.
8,369,141 B2 2/2013 Sommer et al.
8,386,700 B2 2/2013 Olbrich et al.
8,386,860 B2 * 2/2013 Tseng et al. 714/721
8,407,409 B2 3/2013 Kawaguchi
8,464,106 B2 6/2013 Filor et al.
8,503,238 B1 * 8/2013 Wu et al. 365/185.09
8,601,203 B2 12/2013 Holbrook et al.
8,612,804 B1 12/2013 Kang et al.
8,661,184 B2 2/2014 Wood et al.
8,832,506 B2 9/2014 Griffin et al.
2002/0056025 A1 5/2002 Qiu et al.
2002/0159285 A1 10/2002 Morley et al.
2003/0033308 A1 2/2003 Patel et al.
2003/0046603 A1 3/2003 Harari et al.
2003/0074592 A1 4/2003 Hasegawa
2003/0163633 A1 8/2003 Aasheim et al.
2004/0080985 A1 4/2004 Chang et al.
2004/0088511 A1 5/2004 Bacon et al.
2004/0252670 A1 12/2004 Rong et al.
2005/0021904 A1 1/2005 Iaculo et al.
2005/0038792 A1 2/2005 Johnson
2005/0073884 A1 4/2005 Gonzalez et al.
2005/0076102 A1 4/2005 Chen et al.
2005/0144516 A1 6/2005 Gonzalez et al.
2006/0015683 A1 1/2006 Ashmore et al.
2006/0020745 A1 1/2006 Conley et al.
2006/0022054 A1 2/2006 Elhamias et al.
2006/0136682 A1 6/2006 Haridas et al.
2006/0143365 A1 6/2006 Kikuchi
2006/0143475 A1 6/2006 Herbert et al.
2006/0253641 A1 11/2006 Gatzemeier et al.
2006/0256624 A1 11/2006 Eggleston et al.
2006/0282644 A1 12/2006 Wong
2006/0294574 A1 12/2006 Cha
2007/0050536 A1 3/2007 Kolokowsky
2007/0061511 A1 3/2007 Faber
2007/0067598 A1 3/2007 Fujimoto
2007/0083779 A1 4/2007 Misaka et al.
2007/0226592 A1 9/2007 Radke
2007/0234004 A1 10/2007 Oshima et al.
2007/0260811 A1 11/2007 Merry, Jr. et al.
2007/0263444 A1 11/2007 Gorobets et al.
2007/0276973 A1 11/2007 Tan et al.
2008/0046630 A1 2/2008 Lasser
2008/0052446 A1 2/2008 Lasser et al.
2008/0082736 A1 4/2008 Chow et al.
2008/0126720 A1 5/2008 Danilak
2008/0183918 A1 7/2008 Dhokia et al.
2008/0189588 A1 8/2008 Tanaka et al.
2008/0313505 A1 12/2008 Lee et al.
2009/0006900 A1 1/2009 Lastras-Montano et al.
2009/0019321 A1 1/2009 Radke
2009/0070651 A1 3/2009 Diggs et al.
2009/0083587 A1 3/2009 Ng et al.
2009/0089485 A1 4/2009 Yeh
2009/0091990 A1 4/2009 Park et al.
2009/0109786 A1 4/2009 Ye et al.
2009/0125670 A1 5/2009 Keays
2009/0138654 A1 5/2009 Sutardja
2009/0146721 A1 6/2009 Kurooka et al.
2009/0157948 A1 6/2009 Trichina et al.
2009/0164702 A1 6/2009 Kern
2009/0164710 A1 6/2009 Choi et al.
2009/0172262 A1 7/2009 Olbrich et al.
2009/0179707 A1 7/2009 Higashino
2009/0228634 A1 9/2009 Nakamura et al.
2009/0228761 A1 9/2009 Perlmutter et al.
2009/0259819 A1 10/2009 Chen et al.
2009/0259896 A1 10/2009 Hsu et al.
2009/0271562 A1 10/2009 Sinclair
2009/0287975 A1 * 11/2009 Kim et al. 714/746
2009/0300238 A1 12/2009 Panabaker et al.
2009/0323419 A1 12/2009 Lee et al.
2009/0327581 A1 12/2009 Coulson
2009/0327591 A1 12/2009 Moshayedi
2010/0017650 A1 1/2010 Chin et al.
2010/0023674 A1 1/2010 Aviles
2010/0050053 A1 2/2010 Wilson et al.

(56) **References Cited**

U.S. PATENT DOCUMENTS

2010/0122019	A1	5/2010	Flynn et al.	
2010/0128537	A1	5/2010	Suhail et al.	
2010/0138592	A1	6/2010	Cheon	
2010/0165689	A1	7/2010	Rotbard et al.	
2010/0169541	A1	7/2010	Freikorn	
2010/0172179	A1	7/2010	Gorobets et al.	
2010/0174845	A1	7/2010	Gorobets et al.	
2010/0217898	A1	8/2010	Priborsky et al.	
2010/0217915	A1	8/2010	O'Connor et al.	
2010/0223531	A1	9/2010	Fukutomi et al.	
2010/0228928	A1	9/2010	Asnaashari et al.	
2010/0262792	A1	10/2010	Hetzler et al.	
2010/0262795	A1	10/2010	Hetzler et al.	
2010/0262875	A1	10/2010	Hetzler et al.	
2010/0287328	A1	11/2010	Feldman et al.	
2010/0293367	A1	11/2010	Berke et al.	
2010/0312954	A1	12/2010	Jeon et al.	
2010/0318719	A1	12/2010	Keays et al.	
2010/0332726	A1	12/2010	Wang	
2011/0002224	A1	1/2011	Tamura	
2011/0016239	A1	1/2011	Stenfort	
2011/0055468	A1	3/2011	Gonzalez et al.	
2011/0066788	A1	3/2011	Eleftheriou et al.	
2011/0072423	A1	3/2011	Fukata	
2011/0078393	A1	3/2011	Lin	
2011/0099342	A1	4/2011	Ozdemir	
2011/0131365	A1	6/2011	Zhang et al.	
2011/0131447	A1	6/2011	Prakash et al.	
2011/0132000	A1	6/2011	Deane et al.	
2011/0145473	A1	6/2011	Maheshwari	
2011/0161775	A1	6/2011	Weingarten	
2011/0190963	A1	8/2011	Glassl et al.	
2011/0191522	A1	8/2011	Condict et al.	
2011/0191649	A1	8/2011	Lim et al.	
2011/0209032	A1	8/2011	Choi et al.	
2011/0238892	A1	9/2011	Tsai et al.	
2011/0239088	A1	9/2011	Post	
2011/0258496	A1	10/2011	Tseng et al.	
2011/0314219	A1	12/2011	Ulrich et al.	
2011/0320687	A1	12/2011	Belluomini et al.	
2012/0008401	A1	1/2012	Katz et al.	
2012/0011336	A1	1/2012	Saika	
2012/0047318	A1	2/2012	Yoon et al.	
2012/0047320	A1	2/2012	Yoo et al.	
2012/0047409	A1	2/2012	Post et al.	
2012/0066450	A1	3/2012	Yochai et al.	
2012/0096217	A1	4/2012	Son et al.	
2012/0124046	A1	5/2012	Provenzano	
2012/0124273	A1	5/2012	Goss et al.	
2012/0151260	A1	6/2012	Zimmermann et al.	
2012/0170365	A1	7/2012	Kang et al.	
2012/0213004	A1*	8/2012	Yun et al.	365/185.11
2012/0216085	A1	8/2012	Weingarten et al.	
2012/0236656	A1	9/2012	Cometti	
2012/0239858	A1	9/2012	Melik-Martirosian	
2012/0254686	A1	10/2012	Esumi et al.	
2012/0266048	A1	10/2012	Chung et al.	
2012/0278530	A1	11/2012	Ebsen	
2012/0278531	A1	11/2012	Horn	
2012/0284587	A1	11/2012	Yu et al.	
2012/0297113	A1	11/2012	Belluomini et al.	
2012/0311402	A1	12/2012	Tseng et al.	
2012/0324191	A1	12/2012	Strange et al.	
2012/0331207	A1	12/2012	Lassa et al.	
2013/0007380	A1	1/2013	Seekins et al.	
2013/0007543	A1	1/2013	Goss et al.	
2013/0054881	A1	2/2013	Ellis et al.	
2013/0060994	A1	3/2013	Higgins et al.	
2013/0073788	A1	3/2013	Post et al.	
2013/0080691	A1	3/2013	Weingarten et al.	
2013/0094289	A1*	4/2013	Sridharan et al.	365/185.03
2013/0100600	A1	4/2013	Yin et al.	
2013/0124792	A1	5/2013	Melik-Martirosian et al.	
2013/0151753	A1	6/2013	Jeon et al.	
2013/0198436	A1	8/2013	Bandic et al.	
2013/0238833	A1	9/2013	Vogan et al.	
2013/0265825	A1	10/2013	Lassa	
2013/0332791	A1	12/2013	Chu	
2014/0108891	A1	4/2014	Strasser et al.	
2014/0129874	A1	5/2014	Zaltsman et al.	
2014/0208174	A1*	7/2014	Ellis et al.	714/721

FOREIGN PATENT DOCUMENTS

EP	2 498 259	A2	9/2012	
JP	2012129859	A *	7/2012	H04W 16/28
WO	WO 2009/042298	A1	4/2009	
WO	WO 2011/156466		12/2011	

OTHER PUBLICATIONS

International Search Report and Written Opinion dated May 14, 2014, received in International Patent Application No. PCT/US2014/017168, which corresponds to U.S. Appl. No. 14/076,115, 6 pages (Fitzpatrick).

International Search Report and Written Opinion dated May 14, 2014, received in International Patent Application No. PCT/US2014/017169, which corresponds to U.S. Appl. No. 14/076,148, 6 pages (Fitzpatrick).

International Search Report dated Mar. 25, 2014, received in International Patent Application No. PCT/US2013/072400, which corresponds to U.S. Appl. No. 13/690,337, 3 pages (Ellis).

International Search Report and Written Opinion dated Jun. 12, 2014, received in PCT/US2014/018972, which corresponds to U.S. Appl. No. 13/779,352, 12 pages (Schmier).

Invitation to Pay Additional Fees dated Jul. 25, 2014, received in International Patent Application No. PCT/US2014/021290, which corresponds to U.S. Appl. No. 13/791,797, 8 pages (Dean).

International Search Report and Written Opinion dated Jul. 31, 2014, received in International Patent Application No. PCT/US2014/031465, which corresponds to U.S. Appl. No. 13/851,928, 13 pages (Ellis).

International Search Report and Written Opinion dated Jul. 31, 2014, received in International Patent Application No. PCT/US2014/033876, which corresponds to U.S. Appl. No. 13/861,326, 9 pages (Fitzpatrick).

International Search Report and Written Opinion dated Aug. 22, 2014, received in International Patent Application No. PCT/US2014/032978, which corresponds to U.S. Appl. No. 14/081,992 10 pages (Ellis).

Cooke, "Introduction to Flash Memory (T1A)," Flash Memory Summit, Aug. 22, 2008, Micron Technology, Inc., 102 pages.

Gal et al., "Algorithms and Data Structures for Flash Memories," ACM Computing Surveys, Jun. 2005, vol. 37, No. 2, 30 pages.

IBM Corporation, "Systems Management, Work Management," Version 5, Release 4, 9th Edition, Feb. 2006, pp. 1-21.

O'Brien, "SMART Storage Systems Systems Optimus SAS Enterprise SSD Review," SMART Storage Systems, Oct. 9, 2012, 44 pages.

Spanjer, "Flash Management—Why and How?" Smart Modular Technolgoies, Nov. 2009, http://www.scantec.de/fileadmin/pdf/Smart_Modular/Flash-Management.pdf, 14 pages.

Texas Instruments. "Power Management IC for Digital Set Top Boxes," SLVSA10A, Sep. 2009, pp. 1-22.

International Search Report and Written Opinion dated Dec. 20, 2013, received in PCT/US2013/045282, which corresponds to U.S. Appl. No. 13/493,949, 7 pages (Ellis).

Tseng et al., "Understanding the Impact of Power Loss on Flash Memory," DAC'11, Jun. 5-10, 2011, San Diego, California, 6 pages.

Narayanan et al., "Migrating Server Storage to SSDs: Analysis of Tradeoffs," Computer Systems, Apr. 2009, 12 pages.

Shiraz et al., "Block Aging Prevention Technique (BAP) for Flash Based Solid State Disks," 7th International Conference on Emerging Technologies (ICET), Sep. 5, 2011, 6 pages.

Tai et al, "Prolongation of Lifetime and the Evaluation Method of Dependable SSD," 25 International Symposium on Defect and Fault Tolerance in VLSI Systems, 2010, NJ, USA, 8 pages.

(56) **References Cited**

OTHER PUBLICATIONS

International Search Report and Written Opinion dated Jan. 9, 2015, received in International Patent Application No. PCT/US2014/049731, which corresponds to U.S. Appl. No. 14/334,324, 9 pages (Fitzpatrick).

International Search Report and Written Opinion dated Feb. 18, 2015, received in International Patent Application No. PCT/US2014/065401, which corresponds to U.S. Appl. No. 14/082,031, 9 pages (Higgins).

International Search Report dated Apr. 15, 2014, received in International Patent Application No. PCT/US2013/078340, which corresponds to U.S. Appl. No. 13/746,542, 11 pages (Ellis).

International Search Report and Written Opinion dated Nov. 7, 2014, received in International Patent Application No. PCT/US2014/049732, which corresponds to U.S. Appl. No. 14/334,350, 13 pages (Fitzpatrick).

International Search Report and Written Opinion dated Oct. 17, 2014, received in International Patent Application No. PCT/US2014/049734, which corresponds to U.S. Appl. No. 14/332,259, 8 pages (Higgins).

International Search Report and Written Opinion dated Oct. 23, 2014, received in International Patent Application No. PCT/US2014/049736, which corresponds to U.S. Appl. No. 14/446,249, 8 pages (Fitzpatrick).

International Search Report and Written Opinion dated Nov. 5, 2014, received in International Patent Application No. PCT/US2014/049282, which corresponds to U.S. Appl. No. 13/957,407, 12 pages (Fitzpatrick).

Yimo et al., "WeLe-RAID: A SSD-Based RAID for System Endurance and Performance," Jan. 2011, Network and Parallel Computing, Springer, 14 pages.

* cited by examiner

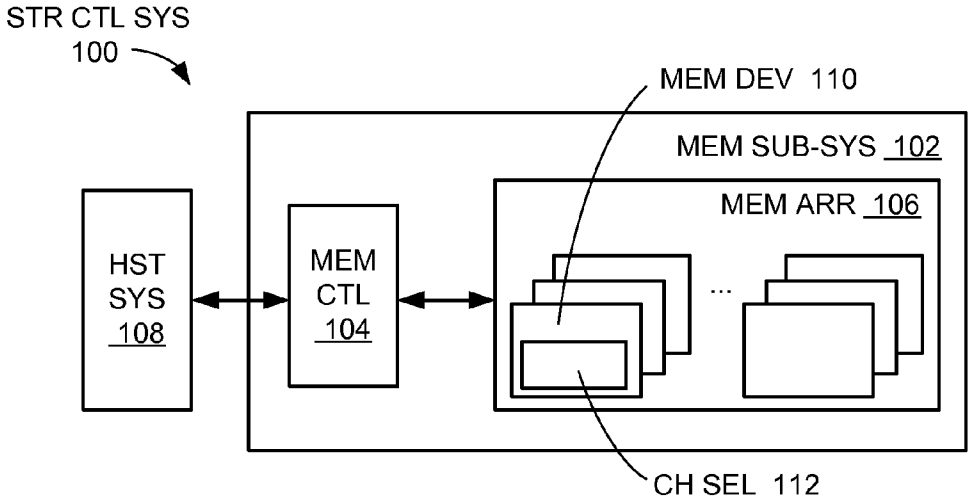
STR CTL SYS
100
MEM DEV 110
MEM SUB-SYS 102
MEM ARR 106
HST
SYS
108
MEM
CTL
104
...
CH SEL 112

FIG. 1

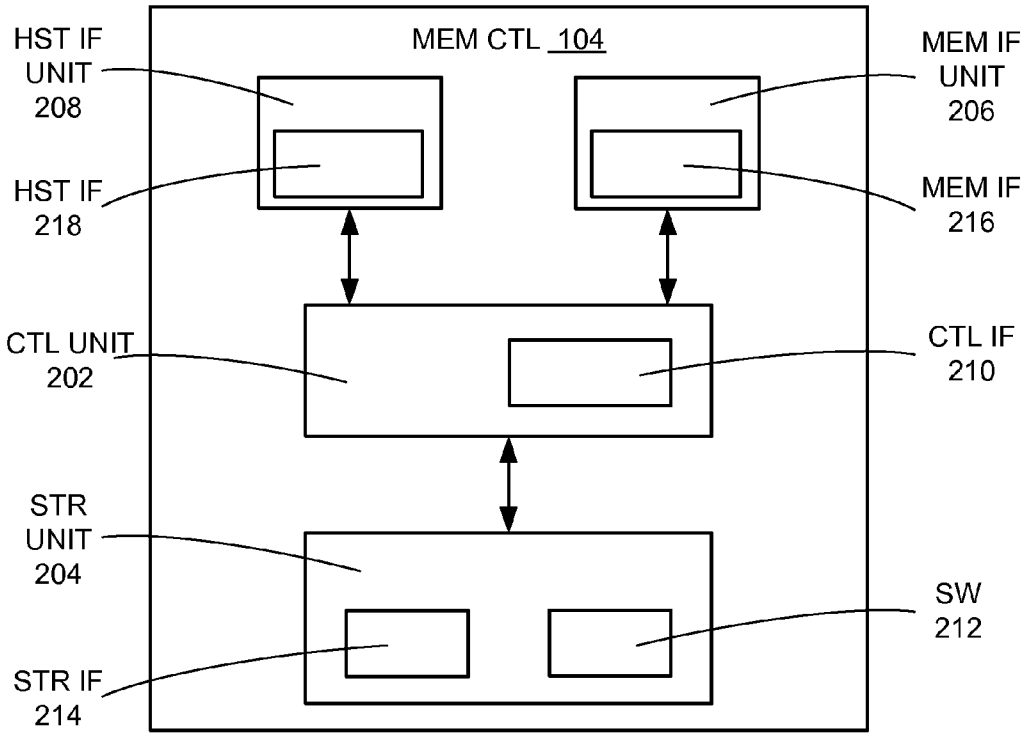
MEM CTL 104
HST IF
UNIT
208
MEM IF
UNIT
206
HST IF
218
MEM IF
216
CTL UNIT
202
CTL IF
210
STR
UNIT
204
SW
212
STR IF
214

FIG. 2

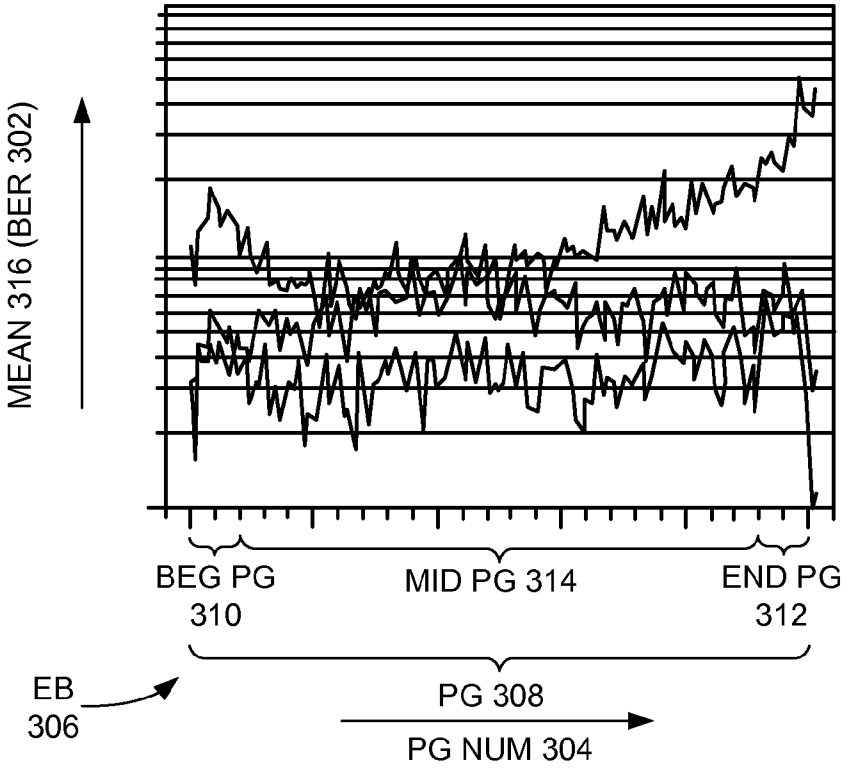
MEAN 316 (BER 302)
BEG PG
310
MID PG 314
END PG
312
EB
306
PG 308
PG NUM 304

FIG. 3

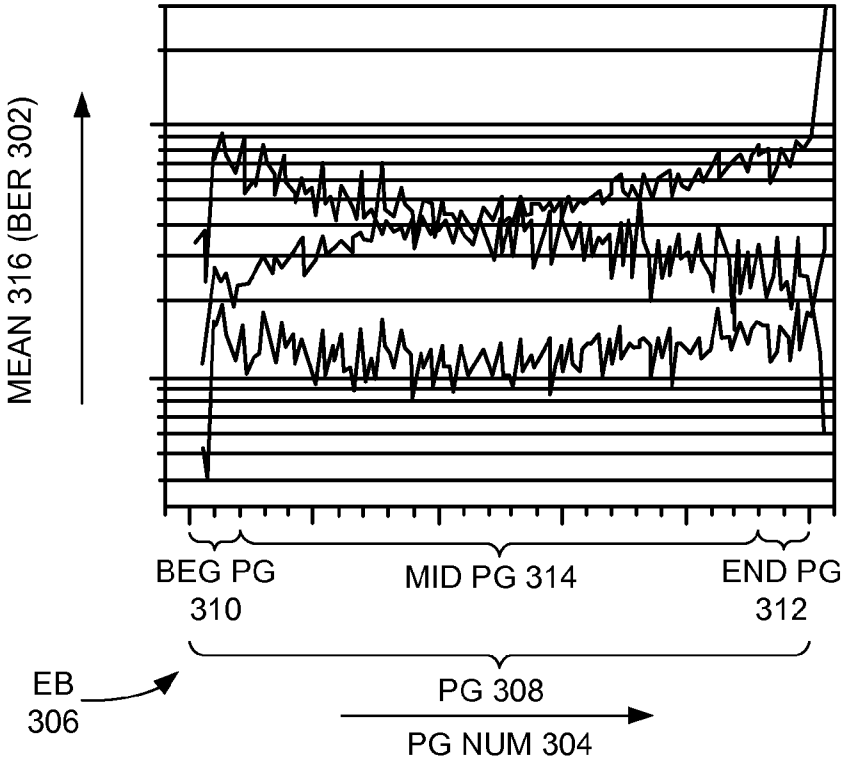
MEAN 316 (BER 302)
BEG PG
310
MID PG 314
END PG
312
EB
306
PG 308
PG NUM 304

FIG. 4

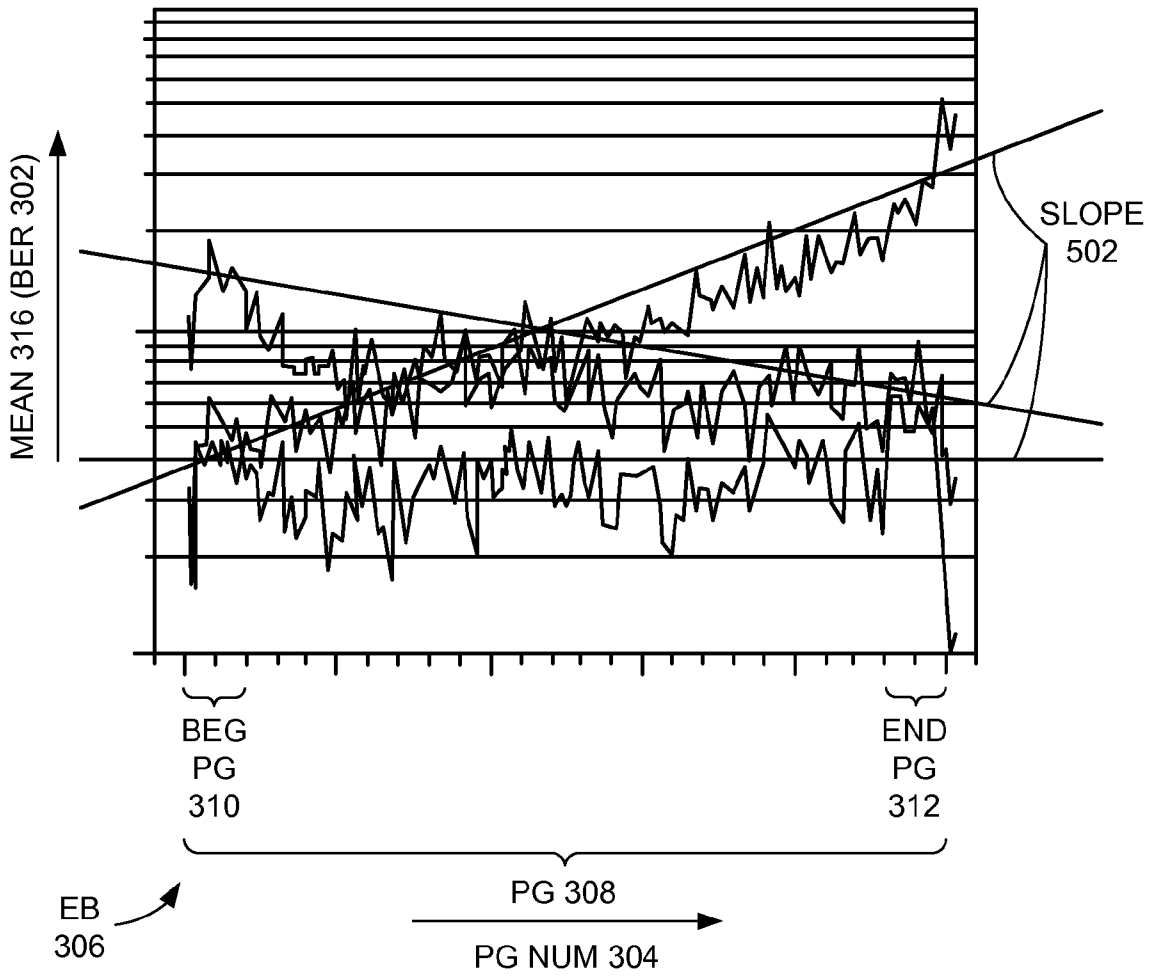
MEAN 316 (BER 302)
SLOPE
502
BEG
PG
310
END
PG
312
PG 308
EB
306
PG NUM 304

FIG. 5

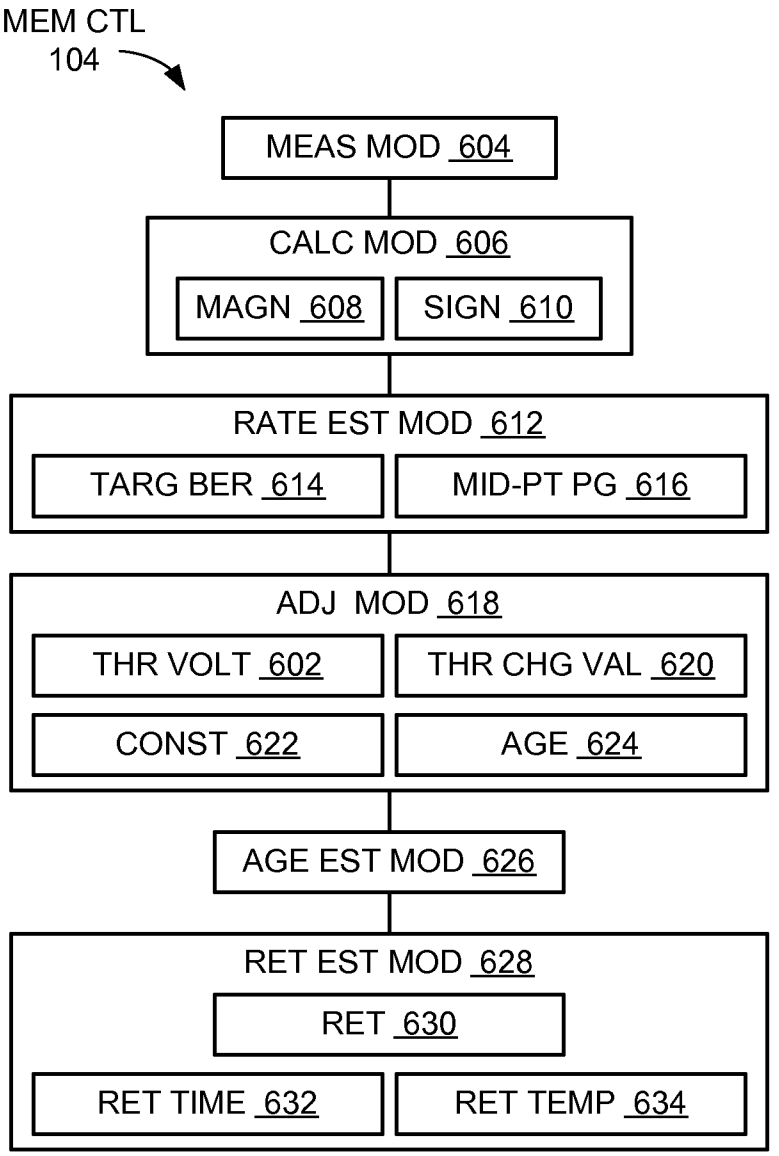
MEM CTL
104
MEAS MOD 604
CALC MOD 606
MAGN 608
SIGN 610
RATE EST MOD 612
TARG BER 614
MID-PT PG 616
ADJ MOD 618
THR VOLT 602
THR CHG VAL 620
CONST 622
AGE 624
AGE EST MOD 626
RET EST MOD 628
RET 630
RET TIME 632
RET TEMP 634

FIG. 6

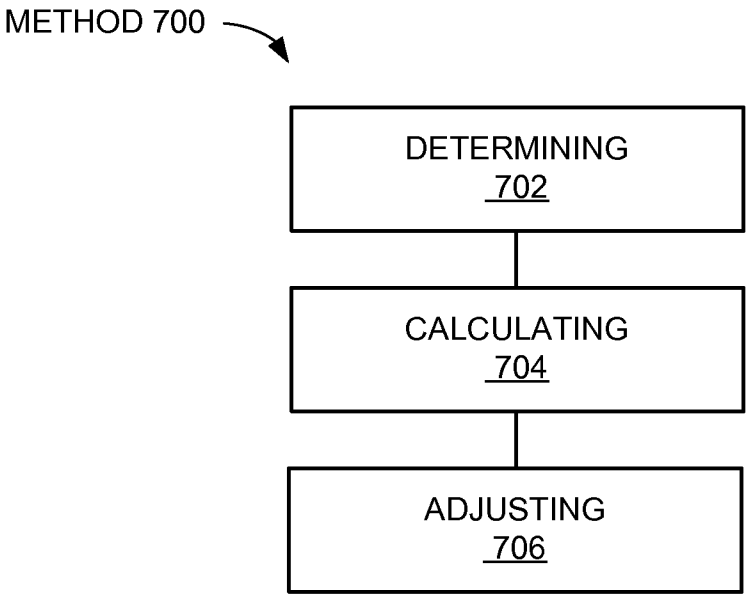

FIG. 7

STORAGE CONTROL SYSTEM WITH DATA MANAGEMENT MECHANISM AND METHOD OF OPERATION THEREOF

TECHNICAL FIELD

The present invention relates generally to a storage control system and more particularly to a system for data management.

BACKGROUND ART

Data storage, often called storage or memory, refers to computer components and recording media that retain digital data. Data storage is a core function and fundamental component of consumer and industrial electronics, especially devices such as computers, televisions, cellular phones, mobile devices, and digital video cameras.

Recently, forms of long-term storage other than electromechanical hard disks have become feasible for use in computers. NOT-AND (NAND) flash is one form of non-volatile memory used in solid-state storage devices. The memory cells are arranged in typical row and column fashion with circuitry for accessing individual cells. The memory transistors of those cells are placed to store an analog value that can be interpreted to hold two logical states in the case of Single Level Cell (SLC) or more than two logical states in the case of Multi Level Cell (MLC).

A flash memory cell is light in weight, occupies very little space, and consumes less power than electromechanical disk drives. Construction of a storage system with this type of memory allows for much higher bandwidths and input/output operations per second (IOPS) than typical electromechanical disk drives. More importantly, it is especially rugged and can operate at a much high temperature range. It will withstand without adverse effects repeated drops, each of which would destroy a typical electromechanical hard disk drive. A problem exhibited by flash memory is that it tends to have a limited life in use.

Thus, a need still remains for better data management devices. In view of the increasing demand for data management devices, it is increasingly critical that answers be found to these problems. In view of the ever-increasing commercial competitive pressures, along with growing consumer expectations and the diminishing opportunities for meaningful product differentiation in the marketplace, it is critical that answers be found for these problems. Additionally, the need to reduce costs, improve efficiencies and performance, and meet competitive pressures adds an even greater urgency to the critical necessity for finding answers to these problems.

Solutions to these problems have been long sought but prior developments have not taught or suggested any solutions and, thus, solutions to these problems have long eluded those skilled in the art.

DISCLOSURE OF THE INVENTION

The present invention provides a method of operation of a storage control system, including: determining a bit error rate of a page; calculating a slope based on the bit error rate; and adjusting a threshold voltage for the page based on the slope for reading a memory device.

The present invention provides a storage control system, including: a measurement module for determining a bit error rate of a page; a calculation module, coupled to the measurement module, for calculating a slope based on the bit error rate; and an adjustment module, coupled to the calculation module, for adjusting a threshold voltage for the page based on the slope for reading a memory device.

Certain embodiments of the invention have other steps or elements in addition to or in place of those mentioned above. The steps or elements will become apparent to those skilled in the art from a reading of the following detailed description when taken with reference to the accompanying drawings.

BRIEF DESCRIPTION OF THE DRAWINGS

FIG. **1** is a storage control system with data management mechanism in an embodiment of the present invention.

FIG. **2** is an exemplary hardware block diagram of the memory controller.

FIG. **3** is a first example graph of bit error rates.

FIG. **4** is a second example graph of the bit error rates.

FIG. **5** is an example graph of a slope of the bit error rates.

FIG. **6** is a control flow of the memory controller.

FIG. **7** is a flow chart of a method of operation of a storage control system in a further embodiment of the present invention.

BEST MODE FOR CARRYING OUT THE INVENTION

The following embodiments are described in sufficient detail to enable those skilled in the art to make and use the invention. It is to be understood that other embodiments would be evident based on the present disclosure, and that system, process, or mechanical changes may be made without departing from the scope of the present invention.

In the following description, numerous specific details are given to provide a thorough understanding of the invention. However, it will be apparent that the invention may be practiced without these specific details. In order to avoid obscuring the present invention, some well-known circuits, system configurations, and process steps are not disclosed in detail.

The drawings showing embodiments of the system are semi-diagrammatic and not to scale and, particularly, some of the dimensions are for the clarity of presentation and are shown exaggerated in the drawing FIGs.

Where multiple embodiments are disclosed and described having some features in common, for clarity and ease of illustration, description, and comprehension thereof, similar and like features one to another will ordinarily be described with similar reference numerals. The embodiments have been numbered first embodiment, second embodiment, etc. as a matter of descriptive convenience and are not intended to have any other significance or provide limitations for the present invention.

The term "module" referred to herein can include software, hardware, or a combination thereof in the present invention in accordance with the context in which the term is used. For example, the software can be machine code, firmware, embedded code, and application software. Also for example, the hardware can be circuitry, processor, computer, integrated circuit, integrated circuit cores, a microelectromechanical system (MEMS), passive devices, environmental sensors including temperature sensors, or a combination thereof.

Referring now to FIG. **1**, therein is shown a storage control system **100** with data management mechanism in an embodiment of the present invention. The storage control system **100** includes a memory sub-system **102** having a memory controller **104** and a memory array **106**. The storage control system **100** includes a host system **108** communicating with the memory sub-system **102**.

The memory controller **104** provides data control and management of the memory array **106**. The memory controller **104** interfaces with the host system **108** and controls the memory array **106** to transfer data between the host system **108** and the memory array **106**.

The memory array **106** includes an array of memory devices **110** including flash memory devices or non-volatile memory devices. The memory array **106** can include pages of data or information. The host system **108** can request the memory controller **104** for reading, writing, and deleting data from or to a logical address space of a storage device or the memory sub-system **102** that includes the memory array **106**.

The memory devices **110** can include chip selects **112**, which are defined as control inputs, for enabling the memory devices **110**. Each of the chip selects **112** can be used to control the operation of one of the memory devices **110**. Each of the chip selects **112** can be used to control sub addresses or logical units (LUNs) within each of the memory devices **110**. When the chip selects **112** are enabled, the memory devices **110** are in active state for operation including reading, writing, or erasing.

Referring now to FIG. **2**, therein is shown an exemplary hardware block diagram of the memory controller **104**. The memory controller **104** can include a control unit **202**, a storage unit **204**, a memory interface unit **206**, and a host interface unit **208**. The control unit **202** can include a control interface **210**. The control unit **202** can execute software **212** stored in the storage unit **204** to provide the intelligence of the memory controller **104**.

The control unit **202** can be implemented in a number of different manners. For example, the control unit **202** can be a processor, an embedded processor, a microprocessor, a hardware control logic, a hardware finite state machine (FSM), a digital signal processor (DSP), or a combination thereof.

The control interface **210** can be used for communication between the control unit **202** and other functional units in the memory controller **104**. The control interface **210** can also be used for communication that is external to the memory controller **104**.

The control interface **210** can receive information from the other functional units or from external sources, or can transmit information to the other functional units or to external destinations. The external sources and the external destinations refer to sources and destinations external to the memory controller **104**.

The control interface **210** can be implemented in different ways and can include different implementations depending on which functional units or external units are being interfaced with the control interface **210**. For example, the control interface **210** can be implemented with a dedicated hardware including an application-specific integrated circuit (ASIC), a configurable hardware including a field-programmable gate array (FPGA), a discrete electronic hardware, or a combination thereof.

The storage unit **204** can include both hardware and the software **212**. For example, the software **212** can include control firmware. The storage unit **204** can include a volatile memory, a nonvolatile memory, an internal memory, an external memory, or a combination thereof. For example, the storage unit **204** can be a nonvolatile storage such as non-volatile random access memory (NVRAM), Flash memory, disk storage, or a volatile storage such as static random access memory (SRAM).

The storage unit **204** can include a storage interface **214**. The storage interface **214** can also be used for communication that is external to the memory controller **104**. The storage interface **214** can receive information from the other functional units or from external sources, or can transmit information to the other functional units or to external destinations. The external sources and the external destinations refer to sources and destinations external to the memory controller **104**.

The storage interface **214** can include different implementations depending on which functional units or external units are being interfaced with the storage unit **204**. The storage interface **214** can be implemented with technologies and techniques similar to the implementation of the control interface **210**.

The memory interface unit **206** can enable external communication to and from the memory controller **104**. For example, the memory interface unit **206** can permit the memory controller **104** to communicate with the memory array **106** of FIG. **1**.

The memory interface unit **206** can include a memory interface **216**. The memory interface **216** can be used for communication between the memory interface unit **206** and other functional units in the memory controller **104**. The memory interface **216** can receive information from the other functional units or can transmit information to the other functional units.

The memory interface **216** can include different implementations depending on which functional units are being interfaced with the memory interface unit **206**. The memory interface **216** can be implemented with technologies and techniques similar to the implementation of the control interface **210**.

The host interface unit **208** allows the host system **108** of FIG. **1** to interface and interact with the memory controller **104**. The host interface unit **208** can include a host interface **218** to provide communication mechanism between the host interface unit **208** and the host system **108**.

The control unit **202** can operate the host interface unit **208** to send control or status information generated by the memory controller **104** to the host system **108**. The control unit **202** can also execute the software **212** for the other functions of the memory controller **104**. The control unit **202** can further execute the software **212** for interaction with the memory array **106** via the memory interface unit **206**.

The functional units in the memory controller **104** can work individually and independently of the other functional units. For illustrative purposes, the memory controller **104** is described by operation of the memory controller **104** with the host system **108** and the memory array **106**. It is understood that the memory controller **104**, the host system **108**, and the memory array **106** can operate any of the modules and functions of the memory controller **104**.

Referring now to FIG. **3**, therein is shown a first example graph of bit error rates **302**. The bit error rates **302** (BER) are defined as numbers of incorrect bits in a data stream stored in the memory devices **110** of FIG. **1**. The incorrect bits can be detected within a code word protected by error-correcting code (ECC). The code word refers to a group of data bytes covered by a single instance of multiple ECC parity words. The error-correcting code refers to parity or redundant data generated over a set of host or user data grouped into the code word.

The first example graph depicts the bit error rates **302** versus page numbers **304** at different settings for a read threshold (Vth). The page numbers **304** are defined as numerical values indicating which smallest groups of data bytes that are read from or written to in an erase block **306**. The erase block **306** is defined as a group with the smallest number of pages **308** that are erased at a time. The pages **308** are defined as the smallest group of data bytes that are read

from or written to in the erase block **306**. The pages **308** are also referred to memory components within the erase block **306** that are programmed as individual units.

For example, the read threshold can be used to determine a digital value stored in a NAND cell of the memory devices **110**. Also for example, the read threshold can be applied to internal NAND comparators, which determine digital values stored in NAND cells. Further, for example, the first example graph can include the bit error rates **302** for the page numbers **304** of the pages **308** that are fast pages or least significant bite pages, which refer to portions of blocks with fast speed in the memory devices **110** that have less time to program compared to other pages in the same blocks.

A mean **316** of the bit error rates **302**, denoted as Mean (BER), per each of the page numbers **304** can be plotted in the first example graph. The mean **316** can be determined by calculating an average of the bit error rates **302** per each of the page numbers **304**.

Relationship between the bit error rates **302** and the page numbers **304** can be determined. For example, the relationship can be determined using statistical methods including a bivariate fit of the mean **316** of the bit error rates **302** at each of the page numbers **304**. The bivariate fit refers to a correlation analysis in statistics that is used to determine if two sets of paired data are statistically correlated. For example, the first example graph can include the mean **316** of the bit error rates **302** in a range from 1 e^{-5} to 9 e^{-4} in the vertical axis associated with the page numbers **304** in a range from 0 to 250 in the horizontal axis.

The first example graph depicts a graphical representation of the bit error rates **302** as a number of bit errors detected in each of the page numbers **304** in the erase block **306** at a set or predetermined value of the read threshold. An approximately flat line of the mean **316** of the bit error rates **302**, where the mean **316** of the bit error rates **302** is relatively or approximately the same across all the page numbers **304** in the erase block **306**, is an indication that the read threshold is set to a correct threshold value. The correct threshold value is a voltage level at which the read threshold is to be set resulting in the mean **316** of the bit error rates **302** relatively or approximately the same across all the page numbers **304** in the erase block **306**.

When the page numbers **304** including lower numbered pages show or have the bit error rates **302** higher than the bit error rates **302** of the page numbers **304** of the pages **308** including upper numbered pages, it indicates that the read threshold values are set too negative relative to or lower than the correct threshold value. When the page numbers **304** including the lower numbered pages show or have the bit error rates **302** lower than the bit error rates **302** of the page numbers **304** including the upper numbered pages, it indicates that the read threshold values are set too positive relative to or higher than the correct threshold value.

As an example, the first example graph depicts an approximately flat line of the mean **316** of the bit error rates **302**. In this example, the approximately flat line of the mean **316** can be determined when the read threshold is set to the correct threshold value of 2 volts.

As another example, the first example graph depicts the page numbers **304** of the lower numbered pages having the bit error rates **302** higher than the bit error rates **302** of the page numbers **304** of the upper numbered pages. In this example, the page numbers **304** of the lower numbered pages having the bit error rates **302** higher can be determined when the read threshold is set to −2 volts, which is too negative relative to or lower than the correct threshold value of 2 volts.

As a further example, the first example graph depicts the page numbers **304** of the lower numbered pages having the bit error rates **302** lower than the bit error rates **302** of the page numbers **304** of the upper numbered pages. In this example, the page numbers **304** of the lower numbered pages having the bit error rates **302** lower can be determined when the read threshold is set to 8 volts, which is too positive relative to or higher than the correct threshold value of 2 volts.

What is also shown in the graphs are beginning pages **310** and ending pages **312**, both having an extreme difference in the bit error rates **302** compared to middle pages **314**. The beginning pages **310** are defined as a range of the pages **308** at the beginning of the erase block **306**. The ending pages **312** are defined as a range of the pages **308** at the end of the erase block **306**. The beginning pages **310** and the ending pages **312** are memory units that are within a number of the pages **308** that are first and last programmed, respectively. The middle pages **314** are defined as a range of the pages **308** of the erase block **306** that are between the beginning pages **310** and the ending pages **312**.

For example, the beginning pages **310** can include the pages **308** that are lower numbered pages of the erase block **306** including the page numbers **304** in a range of 0 to 5. Also for example, the ending pages **312** can include the pages **308** that are upper numbered pages of the erase block **306** including the page numbers **304** in a range of 249 to 255. As a specific example, the beginning pages **310**, the middle pages **314**, and the ending pages **312** can include the page numbers **304** in a range of 0 to 5, 6 to 248, and 249 to 255, respectively, out of 256 pages in the erase block **306**.

Because of this extreme difference, it is important to be selective in which of the pages **308** of the erase block **306** are used to make measurements for correction slope calculations. This is also a gauge to what type of data can or cannot be stored in the beginning pages **310** and the ending pages **312**. Critical metadata can be either stored in the middle pages **314**, such as non-outlying pages, or written with a predetermined amount of redundant information as to reconstruct the metadata on a read failure.

Because the beginning pages **310** and the ending pages **312** can have extreme values of the bit error rates **302** when a current threshold adjustment is not correct yet, the beginning pages **310** and the ending pages **312** can be excluded from a slope measurement. Effects and locations of the beginning pages **310** and the ending pages **312** can differ depending on a type of memory used for the memory devices **110**.

Depending on how the memory devices **110** react or function, sampling of the bit error rates **302** can be performed on a number of or all the pages **308** that are fast pages, slow pages, or a combination thereof. The sampling of the bit error rates **302** can be performed on one of the beginning pages **310**, one of the ending pages **312**, or a combination thereof. For example, the sampling of the bit error rates **302** can be performed on the page numbers **304** of 5 and 249.

For illustrative purposes, the first example graph depicts the bit error rates **302** measured once for every page in the erase block **306**, although it is understood that the bit error rates **302** can be measured in a number of different manners or approaches. For example, during run-time, an approach is to only measure the bit error rates **302** on one of the beginning pages **310**, one of the ending pages **312**, one of the middle pages **314**, or a combination thereof.

Referring now to FIG. **4**, therein is shown a second example graph of the bit error rates. The bit error rates **302** (BER) are numbers of incorrect bits in a data stream stored in the memory devices **110** of FIG. **1**. The incorrect bits can be detected within a code word protected by error-correcting

code (ECC). The code word refers to a group of data bytes covered by a single instance of multiple ECC parity words. The error-correcting code refers to parity or redundant data generated over a set of host or user data grouped into the code word.

The second example graph depicts the bit error rates **302** versus the page numbers **304** at different settings for the read threshold. For example, the read threshold can be used to determine a digital value stored in a NAND cell of the memory devices **110**. Also for example, the read threshold can be applied to internal NAND comparators, which determine digital values stored in NAND cells. Further, for example, the second example graph can include the bit error rates **302** for the page numbers **304** of the pages **308** that are slow pages or most significant bite pages, which refer to portions of blocks with slow speed in the memory devices **110** that need more time to program compared to other pages in the same blocks.

The mean **316** of the bit error rates **302**, denoted as Mean (BER), per each of the page numbers **304** can be plotted in the second example graph. The mean **316** can be determined by calculating an average of the bit error rates **302** per each of the page numbers **304**.

Relationship between the bit error rates **302** and the page numbers **304** can be determined. For example, the relationship can be determined using statistical methods including a bivariate fit of the mean **316** of the bit error rates **302** at each of the page numbers **304**. The bivariate fit refers to a correlation analysis in statistics that is used to determine if two sets of paired data are statistically correlated. For example, the second example graph can include the mean **316** of the bit error rates **302** in a range from $3\ e^{-5}$ to $3\ e^{-3}$ in the vertical axis associated with the page numbers **304** in a range from 0 to 250 in the horizontal axis.

The second example graph depicts a graphical representation of the bit error rates **302** as a number of bit errors detected in each of the page numbers **304** in the erase block **306** at a set or predetermined value of the read threshold. An approximately flat line of the mean **316** of the bit error rates **302**, where the mean **316** of the bit error rates **302** is relatively or approximately the same across all the page numbers **304** in the erase block **306**, is an indication that the read threshold is set to the correct threshold value. The correct threshold value is defined as a voltage level at which the read threshold is set resulting in the mean **316** of the bit error rates **302** relatively or approximately the same across all the page numbers **304** in the erase block **306**.

When the page numbers **304** including lower numbered pages show or have the bit error rates **302** higher than the bit error rates **302** of the page numbers **304** including upper numbered pages, it indicates that the read threshold values are set too negative relative to or lower than the correct threshold value. When the page numbers **304** including the lower numbered pages show or have the bit error rates **302** lower than the bit error rates **302** of the page numbers **304** including the upper numbered pages, it indicates that the read threshold values are set too positive relative to or higher than the correct threshold value.

As an example, the second example graph depicts an approximately flat line of the mean **316** of the bit error rates **302**. In this example, the approximately flat line of the mean **316** occurs when the read threshold is set to the correct threshold value of 6 volts.

As another example, the second example graph depicts the page numbers **304** of the lower numbered pages having the bit error rates **302** higher than the bit error rates **302** of the page numbers **304** of the upper numbered pages. In this example, the page numbers **304** of the lower numbered pages having the bit error rates **302** higher can be determined when the read threshold is set to 0 volts, which is lower than the correct threshold value of 6 volts.

As a further example, the second example graph depicts the page numbers **304** of the lower numbered pages having the bit error rates **302** lower than the bit error rates **302** of the page numbers **304** of the upper numbered pages. In this example, the page numbers **304** of the lower numbered pages having the bit error rates **302** lower can be determined when the read threshold is set to 12 volts, which is too positive relative to or higher than the correct threshold value of 6 volts.

What is also shown in the graphs are the beginning pages **310** and the ending pages **312**, both having an extreme difference in the bit error rates **302** compared to the middle pages **314**. For example, the beginning pages **310** can include the pages **308** that are lower numbered pages of the erase block **306** including the page numbers **304** in a range of 0 to 5. Also for example, the ending pages **312** can include the pages **308** that are upper numbered pages of the erase block **306** including the page numbers **304** in a range of 249 to 255. As a specific example, the beginning pages **310**, the middle pages **314**, and the ending pages **312** can include the page numbers **304** in a range of 0 to 5, 6 to 248, and 249 to 255, respectively, out of 256 pages in the erase block **306**.

Because of this extreme difference, it is important to be selective in which of the pages **308** of the erase block **306** are used to make measurements for correction slope calculations. This is also a gauge to what type of data can or cannot be stored in the beginning pages **310** and the ending pages **312**. Critical metadata can be either stored in the middle pages **314**, such as non-outlying pages, or written with a predetermined amount of redundant information as to reconstruct the metadata on a read failure.

Depending on how the memory devices **110** react or function, sampling of the bit error rates **302** can be performed on a number of or all the pages **308** including fast pages, slow pages, or a combination thereof. The sampling of the bit error rates **302** can be performed on one of the beginning pages **310**, one of the ending pages **312**, or a combination thereof. For example, the sampling of the bit error rates **302** can be performed on the pages **308** of 5 and 249.

For illustrative purposes, the second example graph depicts the bit error rates **302** measured once for every page in the erase block **306**, although it is understood that the bit error rates **302** can be measured in a number of different manners or approaches. For example, during run-time, an approach is to only measure the bit error rates **302** on one of the beginning pages **310**, one of the ending pages **312**, one of the middle pages **314**, or a combination thereof.

Both the fast pages and the slow pages, including the LSB pages and the MSB pages, respectively, show the same effect to the read threshold. An algorithm used to generate a graph of the mean **316** of the bit error rates **302** as a function of the page numbers **304** can ignore the beginning pages **310** and the ending pages **312** values, for example in FIGS. **3-4**, to get best results.

The graphs in FIGS. **3-4** can represent measured data on the memory devices **110** including NAND devices, as an example. A value of the read threshold value associated with the bit error rates **302** is one of many control values that can be changed to affect resulting values of the bit error rates **302** from read operations.

Referring now to FIG. **5**, therein is shown an example graph of a slope **502** of the bit error rates **302**. The example graph of the slope **502** of the bit error rates **302** indicates direction and amount of the read threshold shift. The slope

502 is defined as a change in the mean 316 of the bit error rates 302 over a change in the page numbers 304. The slope 502 of the bit error rates 302 is a value derived from making multiple measurements of the bit error rates 302 on the pages 308 across the erase block 306 that is a target block.

The example graph shows how measurement of the bit error rates 302 can be used to generate a correction value, which is a numerical value used as a factor for adjustment of the read threshold to the correct threshold value. The correction value can include both amount of the correction value and a sign or direction of the correction value. For example, the example graph depicts the mean 316 of the bit error rates 302 in a range from 1 e^{-5} to 9 e^{-4} in the vertical axis associated with the page numbers 304 in a range from 0 to 250 in the horizontal axis.

When the mean 316 of the bit error rates 302 is relatively or approximately the same across all the page numbers 304 in the erase block 306, the slope 502 of the mean 316 of the bit error rates 302 over the page numbers 304 can be approximately horizontally flat or zero. The mean 316 of the bit error rates 302 can be relatively or approximately the same across all the page numbers 304 except for the beginning pages 310 and the ending pages 312.

The slope 502 can be approximately horizontally flat or zero when the read threshold is set to the correct threshold value. For example, the example graph depicts a slope represented by an approximately horizontally flat line of the mean 316 of the bit error rates 302, denoted as slope C, when the read threshold is set to the correct threshold value of 2 volts.

When the page numbers 304 including the lower numbered pages having the bit error rates 302 higher than the bit error rates 302 of the page numbers 304 including the upper numbered pages, the slope 502 is decreasing or negative. The slope 502 is decreasing when the read threshold is set too negative relative to or lower than the correct threshold value. For example, the example graph depicts the slope 502 decreasing, denoted as slope B, when the read threshold is set to −2 volts, which is lower than the correct threshold value of 2 volts.

When the page numbers 304 of the pages 308 including the lower numbered pages having the bit error rates 302 lower than the bit error rates 302 of the page numbers 304 of the pages 308 including the upper numbered pages, the slope 502 is too positive or higher than the correct threshold value. The slope 502 is increasing, denoted as slope A, when the read threshold is set too positive relative to or higher than the correct threshold value. For example, the example graph depicts the slope 502 increasing when the read threshold is set to 8 volts, which is higher than the correct threshold value of 2 volts.

By examining the amount of the slope 502 and the direction, based on the sign, of the slope 502, the read threshold values can be changed directly. The goal of this tuning operation is to generate the bit error rates 302 that result in the slope 502 value of approximately zero. The slope 502 value of approximately zero indicates that the bit error rates 302 values can be represented by an approximately horizontally flat line. Thus, the bit error rates 302 are independent of the page numbers 304. Measurements of the bit error rates 302 to generate the slope 502 can be made overtly by performing a separate set of read steps or as a result in normal read host or recycle read operations as the memory sub-system 102 of FIG. 1 or a solid state drive is in normal use.

As an example, the example graph depicts the slope 502 as slope A when the slope 502 is a strong positive slope, which in turn would require a reduction in the read threshold to normalize the bit error rates 302 across the page numbers 304. Locations of the bit error rates 302 measurements can be chosen or selected to give maximum sensitivity to the measurements but avoid measurements of the beginning pages 310 and the ending pages 312, such as outlier pages. The measurements of the outlier pages can produce values of the bit error rates 302 that would be too great for adjustment of the read threshold.

Relationship between the bit error rates 302 and the page numbers 304 can be determined using statistical methods including the bivariate fit. The bivariate fit is a correlation analysis in statistics. The bivariate fit can be used to determine how two sets of paired data statistically correlated. The bivariate fit can be generated for the paired data using a linear regression line between data points plotted for the paired data.

The slope 502 of the linear regression line is a correlation coefficient. The closer the linear regression line is to a 45-degree angle, the more likely the paired data can be dependent on one another. If the linear regression line is flat or zero, there is no correlation between the data points.

Referring now to FIG. 6, therein is shown a control flow of the memory controller 104. The control flow provides estimation techniques for setting or determining a threshold voltage 602 for read data. The threshold voltage 602 is defined as a voltage setting or level used in determining a digital value stored in a memory cell. The threshold voltage 602 includes the read threshold previously described.

The control flow can be applied to a design that uses a process to recover data after long retention times or an increase in data integrity at boot time. The goal of this process is to find a deterministic low time impact method of determining an optimum threshold voltage (Vth) setting for the memory devices 110 of FIG. 1 before or after a long period of retention.

During the normal operation of the storage control system 100 of FIG. 1 including an SSD, the storage control system 100 can be powered off and stored for an unknown period at an unknown temperature. Power on retention can also have the same problems at power off retention.

When the storage control system 100 is powered up again or the erase block 306 of FIG. 3 is being read from after data have been stored in the erase block 306 for a long period, analog voltages in the memory devices 110 including NAND cells can be shifted. The shift of the analog voltages can result in an increase or decrease in the bit error rates 302 of FIG. 3 from the last known or determined voltage threshold settings.

It is desirable to make key measurements of the bit error rates 302 to determine where to set the threshold voltage 602 including cell voltage thresholds on each operating die in the storage control system 100 to proceed with the boot and run time processes with the minimum amount of error recovery or read retries. Any number of overt read operations for purposes of determining correction settings can negatively impact or affect the performance and reliability of the storage control system 100. Therefore, it is important to devise a mechanism for quickly adjusting the threshold voltage 602 at power up. The mechanism or similar practices can also be applied to a running system.

The memory controller 104 can include a measurement module 604 to determine the bit error rates 302. The measurement module 604 can determine the bit error rates 302 by examining a number of the pages 308 of FIG. 3 in the erase block 306 to obtain values of the bit error rates 302. The bit error rates 302 can be used to estimate threshold settings for the threshold voltage 602 for the erase block 306.

Measurement of the bit error rates 302 can be made by performing a read operation on the pages 308 within the erase block 306. Data from the read operation can be passed

through and processed by an ECC engine and be corrected. A number of bit corrections made by the ECC engine can be used to calculate the bit error rates **302**.

The memory controller **104** can include a calculation module **606** to determine the slope **502** of FIG. **5**. The calculation module **606** can determine the slope **502** by calculating a difference (or a ratio) in the bit error rates **302** between multiple measurements of the pages **308**. The slope **502** can be calculated based on a change in the bit error rates **302** across the pages **308** in the erase block **306**.

The difference can be used to estimate an amount of change for the threshold voltage **602** to get the best overall value for the threshold voltage **602**. For example, one such procedure would be reading two of the pages **308** of 7 and 251, measure the bit error rates **302** for each of the two of the pages **308**, and calculating the slope **502** of a line intersecting two points represented by the bit error rates **302** for the two of the pages **308**.

A magnitude **608** and a sign **610** of the slope **502** can be used to directly predict or estimate an ideal read threshold voltage, which can be assigned to the threshold voltage **602**. The magnitude **608** and the sign **610** can also be used in combination with other predetermined data including block program/erase (P/E) counts to estimate the ideal read threshold voltage.

The memory controller **104** can include a rate estimation module **612** to determine a target bit error rate **614**. The target bit error rate **614** is defined as an error level to which the bit error rates **302** are to be adjusted by changing the threshold voltage **602**. The target bit error rate **614** can be estimated by sampling mid-point pages **616**, which are defined as the pages **308** with the least amount or a predetermined amount of changes for adjustment of the threshold voltage **602**.

The sampling of the mid-point pages **616** can be used as estimation for the lowest target value of the bit error rates **302** overall for the erase block **306**. Each of a number of the mid-point pages **616** can be sampled one time to determine the lowest target value of the bit error rates **302**.

If the threshold voltage **602** for read operations is non-optimal, the pages **308** with the page numbers **304** of FIG. **3** in the middle of the erase block **306** can provide the best approximation of an optimal bit error rate at an optimal read threshold for the erase block **306**. The term "non-optimal" refers to a difference in the bit error rates **302**, between lowest and highest values of the page numbers **304** of the pages **308** that are read, greater than a predetermined error level with a given or predetermined setting of the threshold voltage **602**.

The page numbers **304** in the middle of the erase block **306** provide a better guess or approximation of the optimal bit error rate than the page numbers **304** of the beginning pages **310** of FIG. **3** and the ending pages **312** of FIG. **3**. For example, the page numbers **304** in the middle of the erase block **306** including mid-range page numbers can be 127, 128, or a combination thereof, in the case when there are 256 of the pages **308** in the erase block **306**.

The memory controller **104** can include an adjustment module **618** to determine a threshold change value **620** for adjustment of the threshold voltage **602**. The threshold change value **620** is defined as a numerical value used to adjust the threshold voltage **602**. The threshold change value **620** includes the correction value previously described. The threshold change value **620** can be determined to adjust the threshold voltage **602** for reading data from the memory devices **110**. The threshold change value **620** can be used to adjust the threshold voltage **602** to achieve the target bit error rate **614**.

The threshold change value **620** can be generated based on the slope **502**, a constant **622**, and an age **624**. The constant **622**, denoted as K, is defined as a numerical value that is independent on the age **624**. The constant **622** can be derived and predetermined as constant at various flash ages. The age **624** is defined as a numerical value used as a measure of an ability of memory cells for storing data. The age **624** can be associated with the pages **308** in the erase block **306**.

The memory devices **110** are younger when a numerical value of the age **624** of the memory devices **110** is lower and thus can have better data-retention capability. The memory devices **110** that are older can have worse data-retention capability. The age **624** can be measured using or based on a number of methods including a P/E cycle count, the bit error rates **302**, program times, the optimal read threshold, erase times, and or any other estimation methods of determining how worn the memory devices **110** are. The P/E cycle is a base-level operation of how data is replaced within the erase block **306**. The memory devices **110** can have a limited number of useful P/E cycles.

The threshold change value **620** can be generated based on a product of the slope **502**, the constant **622**, and the age **624**. In other words, the threshold change value **620** can be equal to SLOPE*K(age), where "SLOPE" is the slope **502**, "K" is the constant **622**, and "age" is the age **624**. The constant **622** can be used so that the threshold change value **620** does not exceed a max programming value. For example, if a maximum value of the slope **502** were 1, the constant **622** would be 64 if the max programming value of the threshold voltage **602** were 64.

As the age **624** of the memory devices **110** increases, the P/E cycle count can increase and the program time can decrease. As the age **624** increases, the bit error rates **302** can increase. As the bit error rates **302** increase, the constant **622** can decrease to avoid being overly sensitive to a small percentage of change in the bit error rates **302**. Therefore, the constant **622** can be proportional to the program time and inversely proportional to the P/E cycle count.

The threshold voltage **602** can be purposefully driven more negative or more positive depending on or based on which end or where a target instance of the pages **308** is located within the erase block **306**. The target instance of the pages **308** is one of the pages **308** for which the threshold voltage **602** is to be adjusted. This approach allows the memory controller **104** to obtain lower values for the bit error rates **302** by adjusting the threshold voltage **602** not just at a level of the erase block **306** but optimized to individual levels of the pages **308**. Specifically, the memory controller **104** can estimate the ideal read threshold voltage for one of the pages **308**, assuming that the optimal read threshold is known or predetermined. This estimate can be faster to compute than sweeping a read threshold for each of the pages **308**.

For example, the chart in FIG. **4** shows the slope **502** increasing. For the optimal read threshold in this example, the threshold voltage **602** can be adjusted by increasing the threshold voltage **602** by the threshold change value **620** when reading the beginning pages **310** and by decreasing the threshold voltage **602** by the threshold change value **620** when reading the ending pages **312**.

As an example, when the threshold change value **620** is 6 volts, the threshold voltage **602** can be adjusted by adding 6 to the threshold voltage **602** when reading the lowest and first six of the pages **308** or by subtracting 6 from the threshold voltage **602** when reading the highest or last six of the pages **308**. As such, better values of the bit error rates **302** can be provided on the beginning pages **310** and the ending pages **312** than a block-average optimum threshold.

The memory controller **104** can include an age estimation module **626** to determine the age **624** of the erase block **306**. A change of a difference in the bit error rates **302** between the beginning pages **310** and the ending pages **312** for a given change in shift of the threshold voltage **602** by the threshold change value **620** can be used to estimate a current value of the age **624** and reliability of the erase block **306**. For example, an increasing value of the optimal read threshold for the threshold voltage **602** can indicate that the age **624** is increasing.

The erase block **306** can wear as the program/erase (P/E) cycle count increases. As the erase block **306** wears, the optimal read threshold for the threshold voltage **602** can shift to the right or become more positive. A table of expected values associated with the shift of the optimal read threshold versus the age **624** of the erase block **306** can be built or generated based on how much the erase block **306** wears including the P/E cycle count.

If the threshold voltage **602** used for the erase block **306** is known to be optimal at N of the P/E cycle count (where N is a numerical value), an increase of a P/E wear including the P/E cycle count can be estimated by using the slope **502** of the bit error rates **302**. The slope **502** of the bit error rates **302** can be used as an indicator of change in the optimal read threshold of the threshold voltage **602**. The slope **502** of the bit error rates **302** can be used to estimate an amount of wear the erase block **306** has endured.

The memory controller **104** can include a retention estimation module **628** to determine a retention **630**, which is defined as an amount of correct data after a given or predetermined period. The given or predetermined period can include a time that is independent of whether the storage control system **100** is powered on or powered off. The retention **630** is an ability of memory cells in the memory devices **110** to retain programmed or correct information.

The retention **630** can affect the threshold voltage **602** more than other parameters. A delta or a change in the bit error rates **302** among the pages **308** can be used to determine a placement of the optimal read threshold with respect to each other. For example, the delta or a change in the bit error rates **302** can be determined by the slope **502** including a linear-fit slope.

For example, after a period of the retention **630**, the threshold voltage **602** associated with slope A in FIG. **5** shifts or changes only slightly, but the threshold voltage **602** associated with slope C in FIG. **5** has a larger shift compared to the threshold voltage **602** associated with slope A. In this example, the slope **502** can be used to individually drive the threshold voltage **602** of each of the pages **308** to its correct placement.

If the ideal read threshold voltage is known or determined prior to the period of the retention **630**, the slope **502** of the bit error rates **302** using a previously known or predetermined ideal threshold voltage can provide an estimate of an effective value of a retention time **632**. The term "effective" includes or is associated with time, temperature, or a combination thereof. The retention time **632** is defined as a period during which an amount of correct or programmed data is stored.

The retention time **632** can be quickly estimated to allow the storage control system **100** to specially or properly treat the amount of the correct or programmed data that has been stored. For example, the data can be rewritten as a fresh copy in the memory devices **110** to avoid excessive degradation.

A change in the slope **502** of the bit error rates **302** can be used to infer or estimate a retention temperature **634** if the retention time **632** is known. A change in the slope **502** of the bit error rates **302** can be used to infer or estimate the retention time **632** if the retention temperature **634** is known.

The retention temperature **634** is defined as an ability of memory cells in the memory devices **110** to retain programmed information based on a temperature at which data is held over a period. The retention **630** can be determined based on the retention time **632** and the retention temperature **634**. The retention **630** can be determined based on a number of the P/E cycle count performed in the erase block **306** coupled with a period of time when data is held in the erase block **306** times the retention temperature **634** at which the data is held over the period.

The pages **308** in the erase block **306** can have lesser retention capabilities with an increased number of P/E cycles performed in the erase block **306**. The pages **308** within the erase block **306** cannot be written more than one time without entirely erasing the erase block **306**. The retention **630** of data of the erase block **306** can be influenced by a number of factors including a number of P/E cycles, when first and last program operations have been executed on the erase block **306**, and the retention temperature **634** at which the memory devices **110** are being used or stored.

The retention **630** can be based on something close to but not limited to the retention time **632***the retention temperature **634**, where the operator symbol "*" denotes multiply. As an example, the erase block **306** that was written 24 hours ago and held at 25° C. can have better retention than the erase block **306** that was written 24 hours ago and held at 60° C.

The retention temperature **634** can be an acceleration factor when it comes to the retention **630**. Some minor healing effects can also be seen where a higher temperature for a short time can make the retention better.

The memory controller **104** in the storage control system **100** can determine both the retention time **632** and the retention temperature **634** associated with the retention time **632** to make decisions about when to rewrite data to avoid excessive retention decay. Retention properties including the retention time **632** and the retention temperature **634** can be non-constant over the life of the memory devices **110**. Therefore, the P/E cycle count of the memory devices **110** can also be combined with the slope **502** of the bit error rates **302** to obtain more precise retention statistics.

Conversely, if the effective value of the retention time **632** is known, for example, in a power-on case of the storage control system **100**, the change in the slope **502** of the bit error rates **302** for the retention time **632** can provide a measurement of the age **624** of the memory devices **110**. The measurement of the age **624** can indicate remaining life or life used.

The approaches described above in FIGS. **3-5** can be generalized or applied to any type of the memory devices **110** that exhibits different values for the bit error rates **302** at different values of the threshold voltage **602** that is dependent on the page numbers **304**.

It has been discovered that adjusting the threshold voltage **602** with the threshold change value **620** for the pages **308** based on the slope **502** by the adjustment module **618** provides improved reliability since the threshold voltage **602** is properly set to compensate for the shift of the analog voltages thereby providing reliable reading of data. The analog voltages are shifted when the storage control system **100** is powered up or the erase block **306** is read after the data have been stored in the erase block **306** for a long period.

It has also been discovered that calculating the slope **502** based on the bit error rates **302** by the calculation module **606** provides improved reliability since the magnitude **608** and the

sign **610** of the slope **502** are used to properly adjust the threshold voltage **602** thereby providing reliable reading of the data.

It has further been discovered that determining the bit error rates **302** of the pages **308** by the measurement module **604** provides improved reliability since the bit error rates **302** are used to calculate the slope **502** to properly adjust the threshold voltage **602** thereby providing reliable reading of the data.

It has further been discovered that estimating the target bit error rate **614** for adjustment of the threshold voltage **602** by the rate estimation module **612** provides improved reliability since the target bit error rate **614** is estimated by sampling the mid-point pages **616** resulting in the lowest target value of the bit error rates **302**.

It has further been discovered that increasing or decreasing the threshold voltage **602** with the threshold change value **620** when reading the beginning pages **310** or the ending pages **312** by the adjustment module **618** provides improved reliability since this approach allows the memory controller **104** to obtain lower values for the bit error rates **302**. These lower values are obtained by adjusting the threshold voltage **602** not just at a level of the erase block **306** but optimized to individual levels of the pages **308**.

It has further been discovered that estimating the age **624** of the erase block **306** based on the change of the difference in the bit error rates **302** and the change in the threshold voltage **602** since a proper estimation of the age **624** allows data in the erase block **306** to be rewritten timely to avoid excessive degradation.

It has further been discovered that estimating the retention time **632** and the retention temperature **634** by the retention estimation module **628** provides improved reliability since the retention time **632** and the retention temperature **634** allows the memory controller **104** to make decisions about when to rewrite data to avoid excessive retention decay.

Functions or operations of the memory controller **104** as described above can be implemented with the control unit **202** of FIG. **2**, the storage unit **204** of FIG. **2**, the memory interface unit **206** of FIG. **2**, the host interface unit **208** of FIG. **2**, or a combination thereof. For example, the measurement module **604** can be implemented with the control unit **202** to determine the bit error rates **302**. Also for example, the calculation module **606** can be implemented with the control unit **202** to determine the slope **502** and calculate the magnitude **608** and the sign **610** of the slope **502**.

For example, the rate estimation module **612** can be implemented with the control unit **202** to determine the target bit error rate **614**. Also for example, the adjustment module **618** can be implemented with the control unit **202** to determine the threshold change value **620**.

For example, the age estimation module **626** can be implemented with the control unit **202** to determine the age **624** of the erase block **306**. Also for example, the retention estimation module **628** can be implemented with the control unit **202** to determine the retention **630**.

The measurement module **604** can be coupled to the calculation module **606**. The calculation module **606** can be coupled to the rate estimation module **612**. The rate estimation module **612** can be coupled to the adjustment module **618**. The adjustment module **618** can be coupled to the age estimation module **626**. The age estimation module **626** can be coupled to the retention estimation module **628**.

The physical transformation of adjusting the threshold voltage **602** for the pages **308** for reading from the memory devices **110** results in movement in the physical world, such as people using the memory sub-system **102** of FIG. **1** based on the operation of the storage control system **100**. As the movement in the physical world occurs, the movement itself creates additional information that is converted back in to determine the bit error rates **302** and calculate the slope **502** for the continued operation of the storage control system **100** and to continue the movement in the physical world.

The storage control system **100** is described module functions or order as an example. The modules can be partitioned differently. For example, the age estimation module **626** and the retention estimation module **628** can be combined. Each of the modules can operate individually and independently of the other modules.

Furthermore, data generated in one module can be used by another module without being directly coupled to each other. For example, the age estimation module **626** can receive the bit error rates **302** from the measurement module **604** to estimate the age **624**. The measurement module **604**, the calculation module **606**, the rate estimation module **612**, the adjustment module **618**, the age estimation module **626**, and the retention estimation module **628** can be implemented as hardware accelerators (not shown) within the control unit **202** or can be implemented as hardware accelerators (not shown) in the memory controller **104** or outside of the memory controller **104**.

Referring now to FIG. **7**, therein is shown a flow chart of a method **700** of operation of a storage control system in a further embodiment of the present invention. The method **700** includes: determining a bit error rate of a page in a block **702**; calculating a slope based on the bit error rate in a block **704**; and adjusting a threshold voltage for the page based on the slope for reading a memory device in a block **706**.

Thus, it has been discovered that the storage control system of the present invention furnishes important and heretofore unknown and unavailable solutions, capabilities, and functional aspects for a storage control system with data management mechanism. The resulting method, process, apparatus, device, product, and/or system is straightforward, cost-effective, uncomplicated, highly versatile, accurate, sensitive, and effective, and can be implemented by adapting known components for ready, efficient, and economical manufacturing, application, and utilization.

Another important aspect of the present invention is that it valuably supports and services the historical trend of reducing costs, simplifying systems, and increasing performance.

These and other valuable aspects of the present invention consequently further the state of the technology to at least the next level.

While the invention has been described in conjunction with a specific best mode, it is to be understood that many alternatives, modifications, and variations will be apparent to those skilled in the art in light of the aforegoing description. Accordingly, it is intended to embrace all such alternatives, modifications, and variations that fall within the scope of the included claims. All matters hithertofore set forth herein or shown in the accompanying drawings are to be interpreted in an illustrative and non-limiting sense.

What is claimed is:

1. A method of operation of a storage control system comprising:

determining a bit error rate of a page in an erase block;

calculating a slope based on the bit error rate of one or more pages of the erase block; and

adjusting a threshold voltage for reading the page of the erase block based on the slope.

2. The method as claimed in claim **1** wherein adjusting the threshold voltage includes adjusting the threshold voltage with a threshold change value based on the slope and an age of the erase block.

3. The method as claimed in claim 1 further comprising estimating a target bit error rate for adjustment of the threshold voltage.

4. The method as claimed in claim 1 wherein adjusting the threshold voltage includes adjusting the threshold voltage based on where the page is located within the erase block.

5. The method as claimed in claim 1 wherein:

determining the bit error rate includes determining bit error rates for the slope based on a beginning page and an ending page of the erase block; and

further comprising:

estimating an age of the erase block based on a change of a difference in the bit error rates.

6. The method as claimed in claim 1 further comprising estimating a target bit error rate by sampling a mid-point page of the erase block for adjustment of the threshold voltage.

7. The method as claimed in claim 1 wherein adjusting the threshold voltage includes increasing the threshold voltage by a threshold change value when reading a beginning page of the erase block and decreasing the threshold voltage by the threshold change value when reading an ending page of the erase block.

8. The method as claimed in claim 1 wherein:

determining the bit error rate includes determining bit error rates for calculating the slope based on a beginning page and an ending page of the erase block; and

further comprising:

estimating an age of the erase block based on a change of a difference in the bit error rates and a change in the threshold voltage.

9. A storage system comprising:

a controller, coupled to non-volatile storage, the controller including one or more processors for executing software instructions stored in memory of the storage system;

a measurement module for determining a bit error rate of a page in an erase block of the non-volatile storage;

a calculation module, coupled to the measurement module, for calculating a slope based on the bit error rate of one or more pages of the erase block; and

an adjustment module, coupled to the calculation module, for adjusting a threshold voltage for reading the page of the erase block based on the slope.

10. The system as claimed in claim 9 wherein the adjustment module is for adjusting the threshold voltage with a threshold change value based on the slope and an age of the erase block.

11. The system as claimed in claim 9 further comprising a rate estimation module, coupled to the calculation module, for estimating a target bit error rate for adjustment of the threshold voltage.

12. The system as claimed in claim 9 wherein the adjustment module is for adjusting the threshold voltage based on where the page is located within the erase block.

13. The system as claimed in claim 9 wherein:

the measurement module is for determining bit error rates for the slope based on a beginning page and an ending page of the erase block; and

further comprising:

an age estimation module, coupled to the measurement module, for estimating an age of the erase block based on a change of a difference in the bit error rates.

14. The system as claimed in claim 9, wherein the adjustment module is for adjusting the threshold voltage with a threshold change value based on the slope, and an age of the erase block.

15. The system as claimed in claim 9, further comprising a rate estimation module, coupled to the calculation module, for estimating a target bit error rate by sampling a mid-point page of the erase block for adjustment of the threshold voltage.

16. The system as claimed in claim 9, wherein the adjustment module is for increasing the threshold voltage by a threshold change value when reading a beginning page and decreasing the threshold voltage by the threshold change value when reading an ending page.

17. The system as claimed in claim 9, wherein:

the measurement module is for determining bit error rates for calculating the slope based on a beginning page and an ending page of the erase block; and

further comprising:

an age estimation module, coupled to the measurement module, for estimating an age of the erase block based on a change of a difference in the bit error rates and a change in the threshold voltage.

18. The system as claimed in claim 9, further comprising said non-volatile storage.

19. The system as claimed in claim 9, further comprising:

a retention estimation module for determining an amount of correct data after a predetermined period of time.

* * * * *