US008329572B2

(12) **United States Patent**
Isono

(10) **Patent No.: US 8,329,572 B2**
(45) **Date of Patent: Dec. 11, 2012**

(54) **SEMICONDUCTOR DEVICE AND METHOD FOR FABRICATING THE SAME**

(75) Inventor: **Shunsuke Isono**, Osaka (JP)

(73) Assignee: **Panasonic Corporation**, Osaka (JP)

(*) Notice: Subject to any disclaimer, the term of this patent is extended or adjusted under 35 U.S.C. 154(b) by 82 days.

(21) Appl. No.: **13/051,415**

(22) Filed: **Mar. 18, 2011**

(65) **Prior Publication Data**

US 2011/0171824 A1 Jul. 14, 2011

Related U.S. Application Data

(62) Division of application No. 12/153,028, filed on May 13, 2008, now Pat. No. 7,935,623, which is a division of application No. 11/716,704, filed on Mar. 12, 2007, now Pat. No. 7,400,045, which is a division of application No. 10/945,920, filed on Sep. 22, 2004, now Pat. No. 7,215,028.

(30) **Foreign Application Priority Data**

Sep. 26, 2003 (JP) 2003-335185

(51) **Int. Cl.**
H01L 21/4763 (2006.01)

(52) **U.S. Cl.** **438/618**; 438/620; 438/631; 438/637; 438/672; 438/673; 438/700; 257/E21.59; 257/E21.641

(58) **Field of Classification Search** 438/618, 438/620, 622, 672, 673, 700, 631, 637; 257/E21.59, 257/E21.641

See application file for complete search history.

(56) **References Cited**

U.S. PATENT DOCUMENTS

6,114,243 A 9/2000 Gupta et al.
6,281,535 B1 8/2001 Ma et al.
6,313,028 B2 11/2001 Huang et al.
6,417,116 B2 7/2002 Kudo et al.
6,479,366 B2 11/2002 Miyamoto
6,589,863 B1 7/2003 Usami
6,730,590 B2 5/2004 Ohashi et al.
6,828,222 B2 12/2004 Oyamatsu

(Continued)

FOREIGN PATENT DOCUMENTS

JP 8-83780 A 3/1996

(Continued)

OTHER PUBLICATIONS

Japanese Office Action issued in corresponding Japanese Patent Application No. 2003-335185, dated Aug. 22, 2006.

(Continued)

Primary Examiner — Long Tran
(74) *Attorney, Agent, or Firm* — McDermott Will & Emery LLP

(57) **ABSTRACT**

In a method for fabricating a semiconductor device, first, a first metal interconnect is formed in an interconnect formation region, and a second metal interconnect is formed in a seal ring region. Subsequently, by chemical mechanical polishing or etching, the upper portions of the first metal interconnect and the second metal interconnect are recessed to form recesses. A second insulating film filling the recesses is then formed above a substrate, and the upper portion of the second insulating film is planarized. Next, a hole and a trench are formed to extend halfway through the second insulating film, and ashing and polymer removal are performed. Subsequently to this, the hole and the trench are allowed to reach the first metal interconnect and the second metal interconnect.

7 Claims, 7 Drawing Sheets

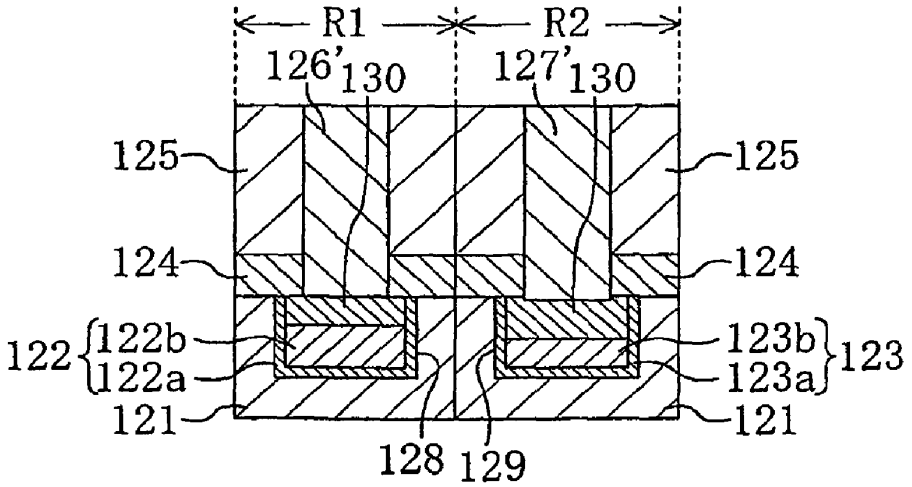

U.S. PATENT DOCUMENTS

6,838,370	B1	1/2005	Niuya et al.	
6,908,847	B2	6/2005	Saito et al.	
7,041,586	B2	5/2006	Kudo et al.	
2002/0079585	A1	6/2002	Wong	
2002/0125577	A1	9/2002	Komada	
2002/0155702	A1	10/2002	Aoki et al.	
2003/0003733	A1	1/2003	Ohashi et al.	
2003/0020168	A1 *	1/2003	Watanabe et al.	257/760
2003/0118798	A1	6/2003	Fuji	
2005/0054122	A1	3/2005	Celii et al.	
2005/0085066	A1	4/2005	Tsao et al.	

FOREIGN PATENT DOCUMENTS

JP	08-264538		10/1996
JP	11-145288	A	5/1999
JP	11-274122	A	10/1999
JP	2000-174123	A	6/2000
JP	2002-118078	A	4/2002
JP	2002-246391		8/2002
JP	2002-270608	A	9/2002
JP	2002-289689	A	10/2002
JP	2002-373937	A	12/2002
JP	2003-133314	A	5/2003

OTHER PUBLICATIONS

Japanese Notice of Reasons for Rejection, with English Translation, issued in Japanese Patent Application No. 2006-281346, mailed on Oct. 5, 2010.

* cited by examiner

FIG. 1A

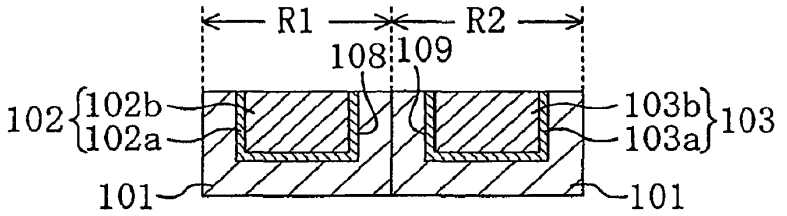

FIG. 1B

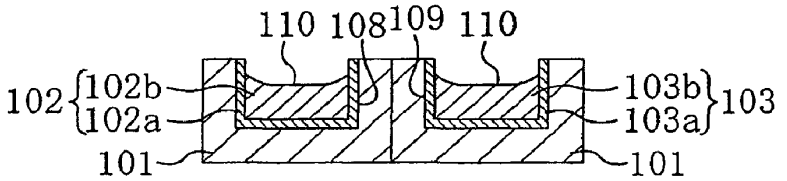

FIG. 1C

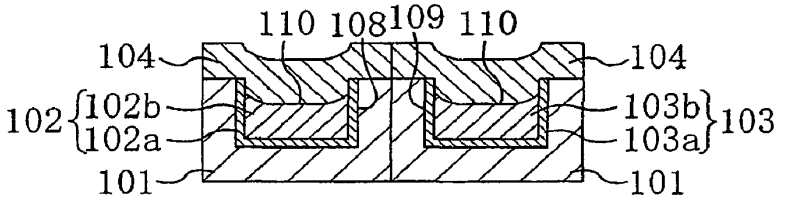

FIG. 1D

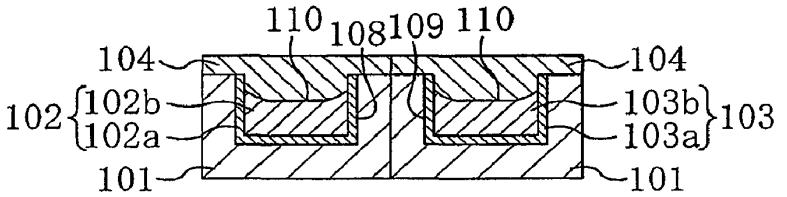

FIG. 1E

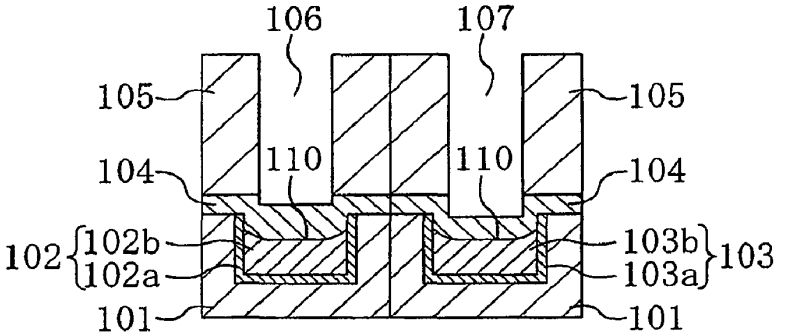

FIG. 1F

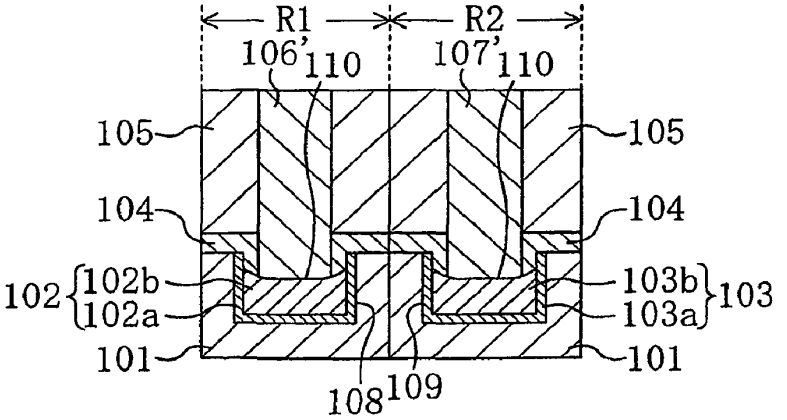

FIG. 2A

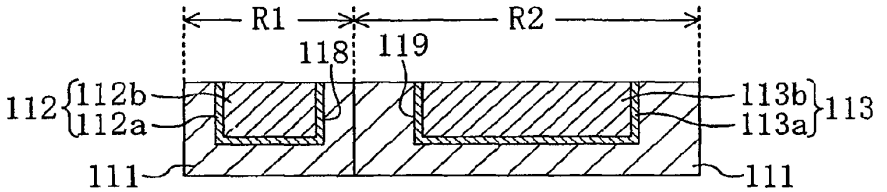

FIG. 2B

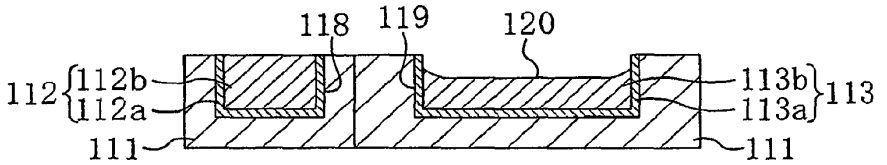

FIG. 2C

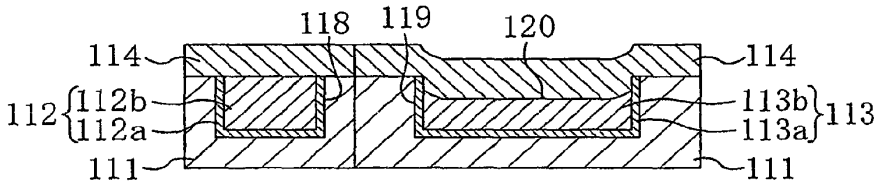

FIG. 2D

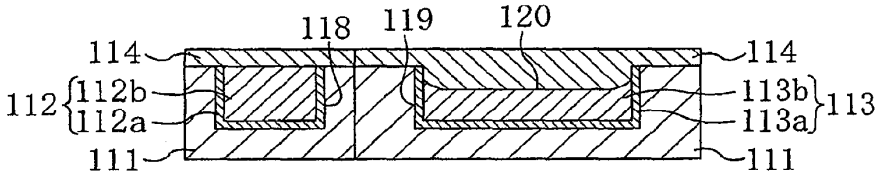

FIG. 2E

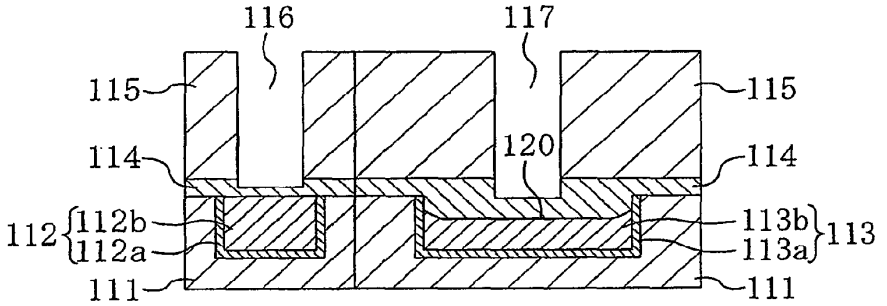

FIG. 2F

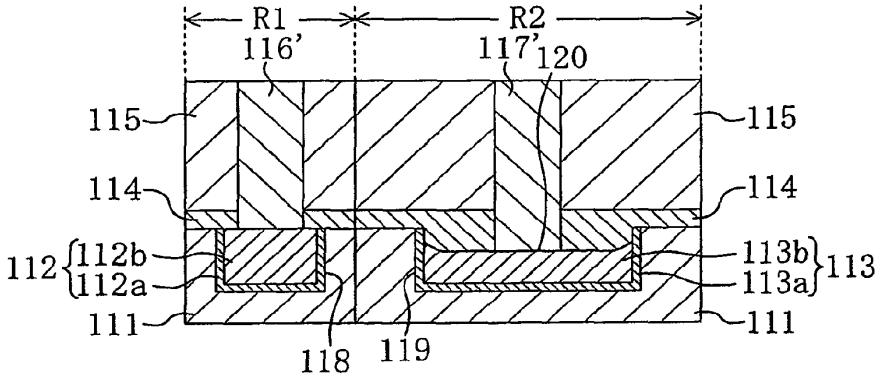

FIG. 3A

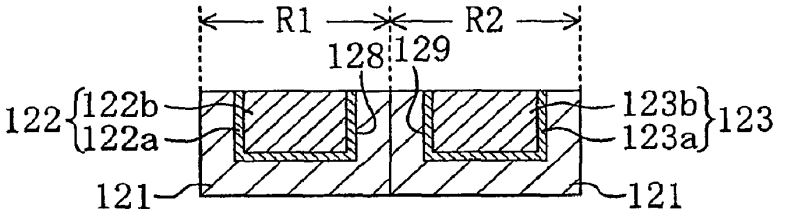

FIG. 3B

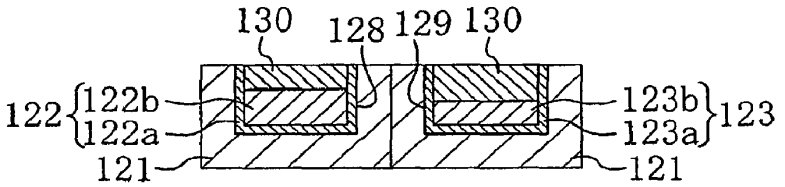

FIG. 3C

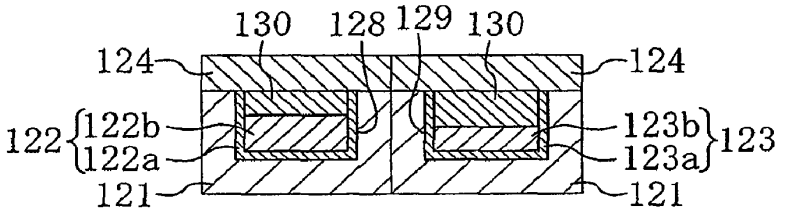

FIG. 3D

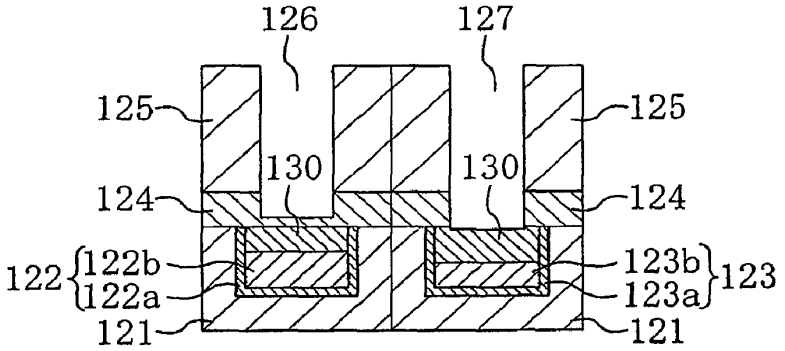

FIG. 3E

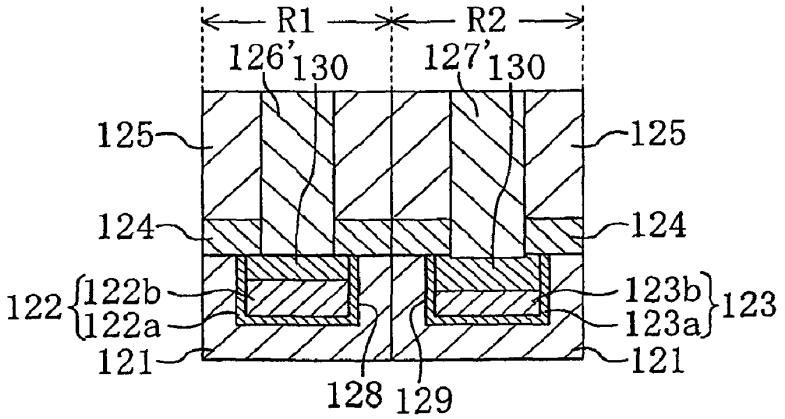

FIG. 4A

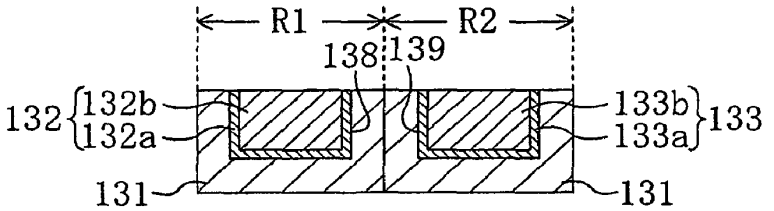

FIG. 4B

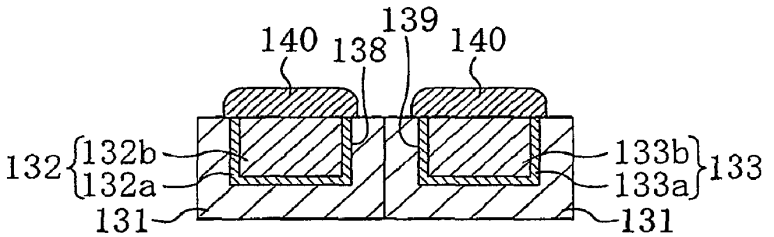

FIG. 4C

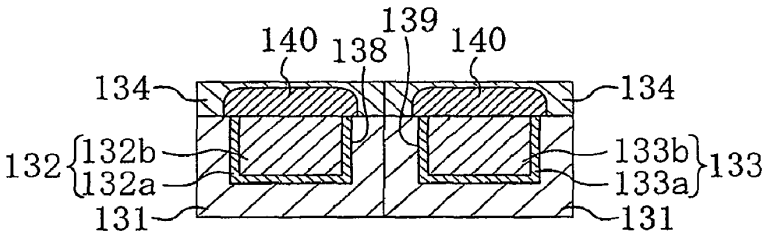

FIG. 4D

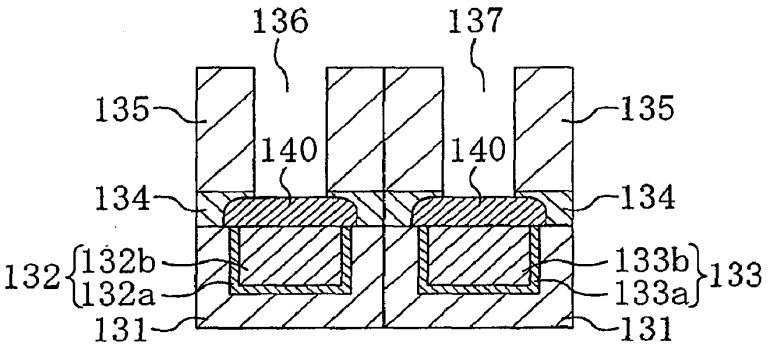

FIG. 4E

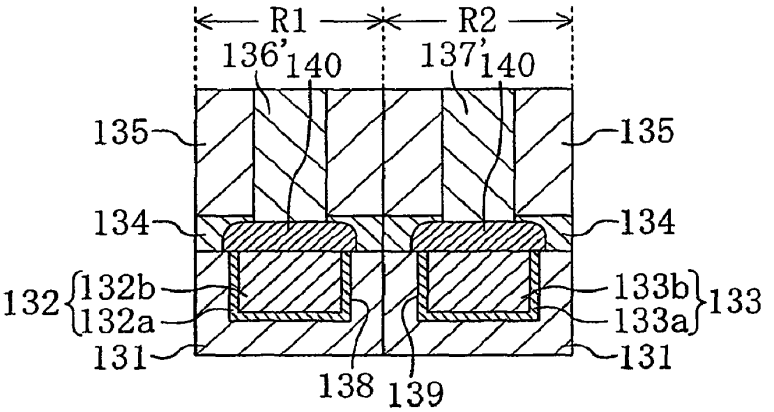

FIG. 5A

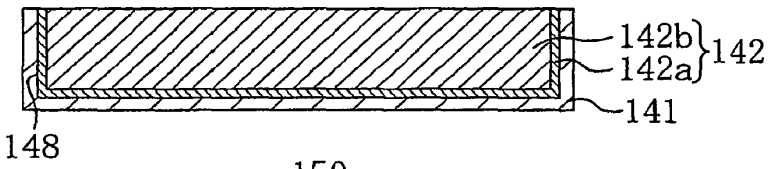

FIG. 5B

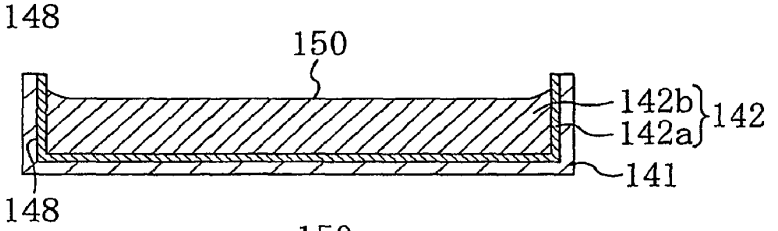

FIG. 5C

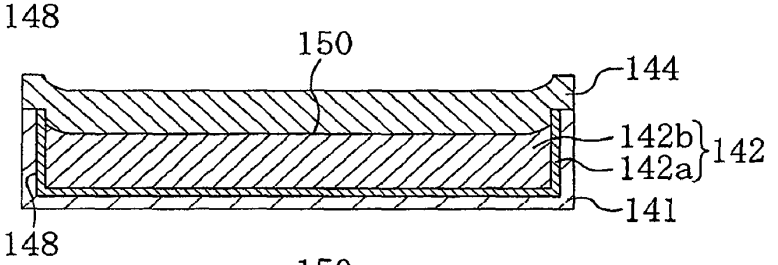

FIG. 5D

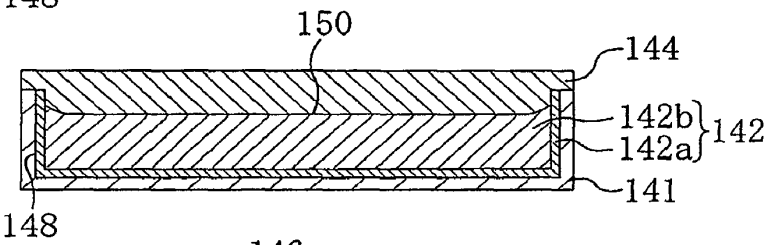

FIG. 5E

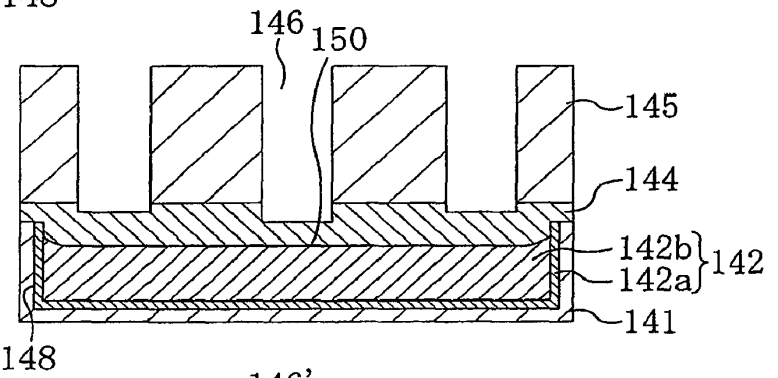

FIG. 5F

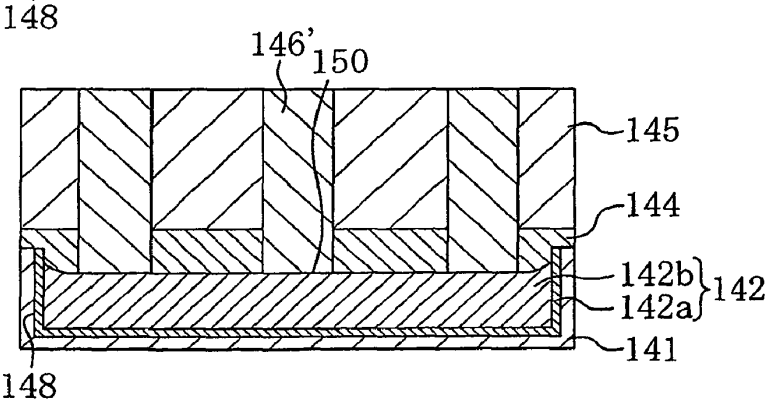

Fig,6A

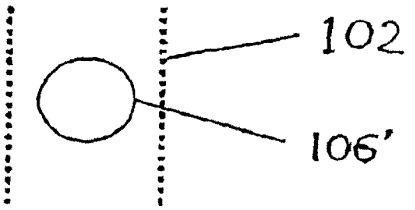

Fig,6B

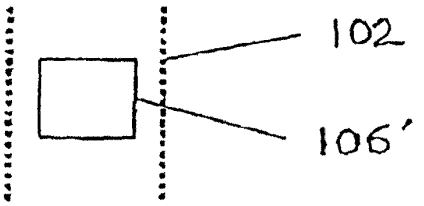

Fig,6C

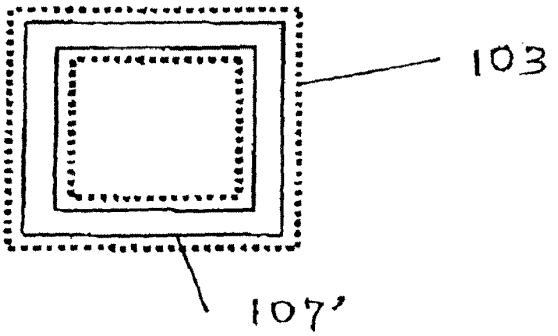

Fig,6D

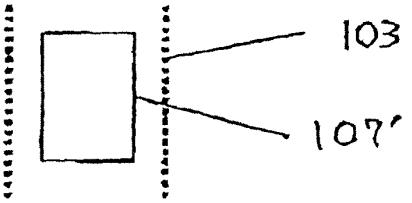

Fig,6E

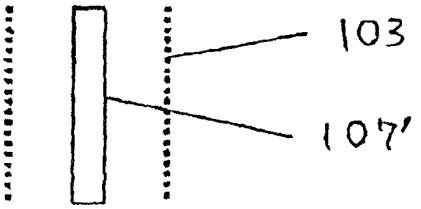

FIG. 7A

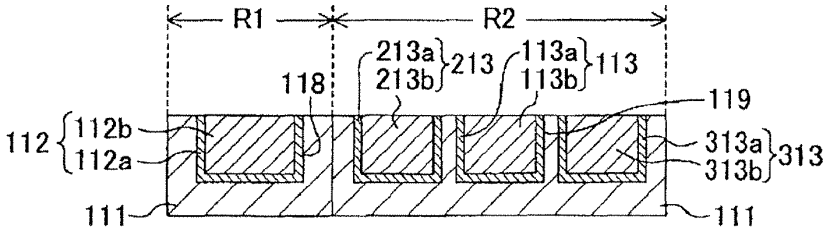

FIG. 7B

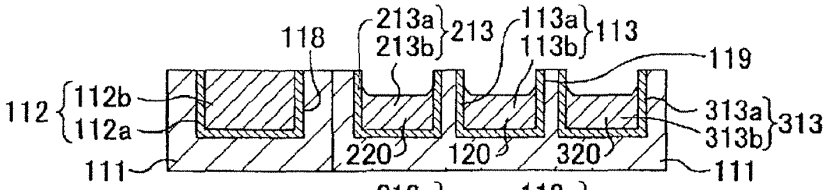

FIG. 7C

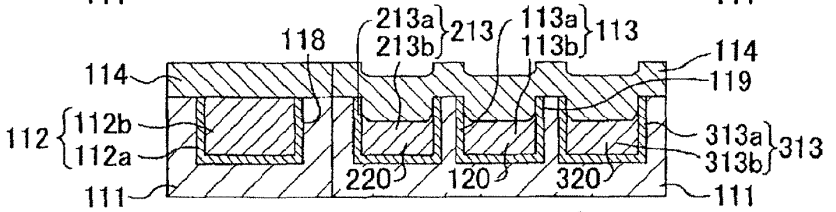

FIG. 7D

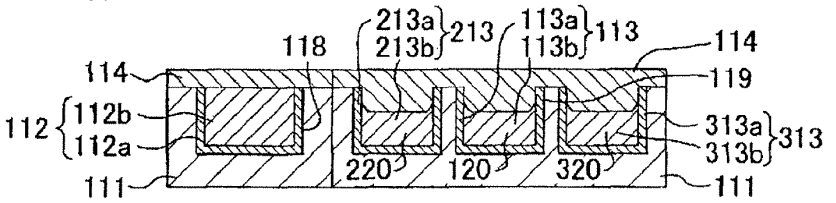

FIG. 7E

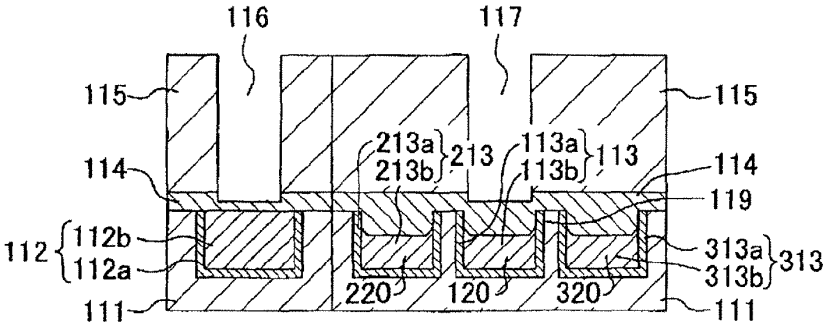

FIG. 7F

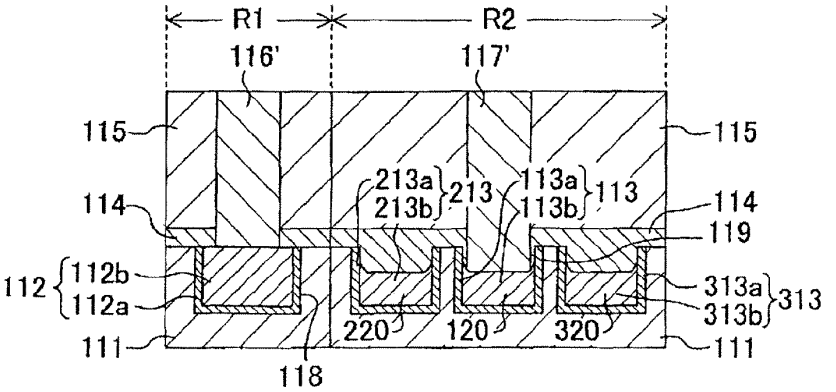

SEMICONDUCTOR DEVICE AND METHOD FOR FABRICATING THE SAME

CROSS REFERENCE TO RELATED APPLICATIONS

This application is a Divisional of U.S. application Ser. No. 12/153,028, filed on May 13, 2008, now U.S. Pat. No. 7,935,623 which is a Divisional of U.S. application Ser. No. 11/716,704, filed Mar. 12, 2007, now U.S. Pat. No. 7,400,045, which is a Divisional of U.S. application Ser. No. 10/945,920, filed Sep. 22, 2004, now U.S. Pat. No. 7,215,028, and claims priority under 35 U.S.C. §119 on Patent Application No. 2003-335185 filed in Japan on Sep. 26, 2003, the entire contents of each of which are hereby incorporated by reference.

BACKGROUND OF THE INVENTION

(a) Fields of the Invention

The present invention relates to semiconductor devices and methods for fabricating the same. In particular, the present invention relates to semiconductor devices having contact portions of conductor (referred hereinafter to as conductor contact portions) on an interconnect layer and methods for fabricating such a device.

(b) Description of Related Art

In recent years, miniaturization and high degree of integration of semiconductor integrated circuits have been rapidly proceeding. In accordance with the proceeding miniaturization of the circuit, delay time caused by transistor operation can be cut in the device while interconnect resistance and parasitic capacitance increase therein. This makes it difficult to cut delay time caused in an interconnect. In a measure to cut the interconnect delay time, in order to reduce the interconnect resistance, copper having a lower resistivity than aluminum used as a conventional interconnect material is employed as a substitute for aluminum. Moreover, in order to reduce the parasitic capacitance, an insulating film having a low dielectric constant is employed as a material for an interlayer insulating film and the like.

Copper is difficult to etch. Therefore, formation of an interconnect with copper is made by a damascene process: a hole pattern and a trench configuration are formed in an insulating film, after which the patterns are filled with copper.

In a chip of a semiconductor device, a trench configuration called a seal ring is formed to protect transistors and interconnects provided in the chip against outside moisture. The seal ring is formed to surround an area containing the transistors and the interconnects. The seal ring is formed simultaneously with the etching for forming a hole pattern (vias).

The hole pattern and the trench configuration serving as the seal ring are formed in the following manner.

First, to form the hole pattern and the trench configuration, an interlayer insulating film is halfway removed using photoresist as a mask. The reason why the removal is stopped halfway is that if an interconnect layer located below the hole pattern and the trench configuration is exposed therefrom during the removal, the interconnect layer corrodes during subsequent ashing for removing the photoresist and subsequent polymer removal. To avoid such a problem, ashing and polymer removal are performed with only part of the thickness of the interlayer insulating film remaining. Thereafter, using the resulting interlayer insulating film itself as a mask, the hole pattern and the trench configuration are made to reach the interconnect layer.

However, the conventional semiconductor device has caused the following problems.

Generally, during etching, the etching rate rises as the area of an opening increases. In this device, the opening area of the trench is greater than that of the hole. Thus, when the trench and the hole are formed at the same time by a single etching, the trench is formed deeper. Therefore, it might be unable to stop etching of the trench halfway through the interlayer insulating film, resulting in exposure of metal of the interconnect layer located therebelow. If the metal is exposed in this process, then the disadvantage arises that the metal corrodes by subjecting itself to subsequent photoresist removal by ashing and to subsequent polymer removal.

Such a disadvantage also arises when the interlayer insulating film is formed with multiple types of hole patterns. Specifically, the hole patterns have different pattern densities or the like, so that it is impossible, in forming the different hole patterns, to partly remove the insulating film to form the hole patterns with a uniform depth. This causes the disadvantage that the interconnect layer located below the hole patterns is exposed.

SUMMARY OF THE INVENTION

An object of the present invention is to provide a method for fabricating a semiconductor device resistant to metal corrosion in an interconnect layer by taking measures to prevent exposure of the interconnect layer during formation of a hole pattern and a trench pattern.

A first semiconductor device of the present invention comprises: a semiconductor substrate; a first insulating film provided over the semiconductor substrate; an interconnect layer provided in at least an upper portion of the first insulating film; a second insulating film provided on the first insulating film and the interconnect layer; a third insulating film provided on the second insulating film; and at least one conductor contact portion passing through the third insulating film and the second insulating film to reach the interconnect layer. In this device, an upper portion of the interconnect layer is provided with a recess and a portion of the second insulating film located on the interconnect layer has a greater thickness than a portion thereof located on the first insulating film.

With this device, the portion of the second insulating film located on the interconnect layer is formed thick. Therefore, in the step of partly removing the third insulating film and the second insulating film to form the conductor contact portion, part of the second insulating film can be easily left on the interconnect layer, which makes it difficult to expose the interconnect layer. The semiconductor surface in this condition can be subjected to a process that may corrode metal, such as ashing or polymer removal. Subsequently, the unremoved parts of the third insulating film and the second insulating film can be removed to expose the interconnect layer, and a conductor for the conductor contact portion can fill the removed portion. That is to say, a process that may corrode metal can be carried out on the semiconductor surface with the interconnect layer not exposed, whereby corrosion of the interconnect layer can be prevented.

On the other hands, all portions of the second insulating film but the portion located on the interconnect layer are not formed thick. Therefore, the dielectric constant between the layers can be kept constant.

The interconnect layer may comprise a first interconnect layer. The conductor contact portion may comprise a first conductor contact portion. The device may further comprise: a second interconnect layer provided in at least an upper portion of the first insulating film; and a second conductor contact portion passing through the third insulating film and the second insulating film to reach the second interconnect

layer. A portion of the second insulating film located on the first interconnect layer may have a greater thickness than a portion thereof located on the second interconnect layer. In this case, even if the third insulating film and the second insulating film are partly removed in order to form the conductor contact portion, it can become difficult to expose the first interconnect layer because the region of the second insulating film formed with the first conductor contact portion is formed thick. As is the case where the area in which the first conductor contact portion is formed is greater than the area in which the second conductor contact portion is formed, when the third insulating film and the second insulating film are partly removed to form the conductor contact portion, the region where the first conductor contact portion is formed is removed deeper. Even in such a circumstance, it can become difficult to expose the first interconnect layer.

The first interconnect layer may have a greater width than the second interconnect layer. In this case, the region where the first interconnect layer is formed has a higher area ratio of conductor (metal) than the region where the second interconnect layer is formed. Therefore, when chemical mechanical polishing or similar treatment is carried out on the first interconnect layer and the second interconnect layer from above, the recess formed in the upper portion of the first interconnect layer can be deepened by the metal area ratio dependence of dishing.

As shown in FIGS. **7**A-**7**F, a dummy interconnect layer may be formed beside the first interconnect layer. In this case, the surrounding of the region where the first interconnect layer is formed has a higher area ratio of conductor (metal) than the surrounding of the region where the second interconnect layer is formed. Therefore, when chemical mechanical polishing or similar treatment is carried out on the first interconnect layer and the second interconnect layer from above, the recess formed in the upper portion of the first interconnect layer can be deepened by the metal area ratio dependence of dishing.

The first conductor contact portion may be of rectangular or strip-like plane, and the second conductor contact portion may be of circular or square plane.

The first interconnect layer and the first conductor contact portion may constitute a seal ring provided in ring shape. In this case, even though the first conductor contact portion serving as the seal ring differs greatly in area from the second conductor contact portion, the structure described above can prevent the first interconnect layer from being exposed.

An element may be provided in the semiconductor substrate, and the interconnect layer may be electrically connected to the element. In this case, when the third insulating film and the second insulating film are partly removed in forming the conductor contact portion, an error would arise in the depth to be removed. Even though such an error arises, it can become difficult to expose the interconnect layer.

The second insulating film is preferably an insulating film of silicon compound containing carbon.

A second semiconductor device of the present invention comprises: a semiconductor substrate; a first insulating film provided on the semiconductor substrate; an interconnect layer provided in at least an upper portion of the first insulating film; an oxidation-resistant conductor film covering the top of the interconnect layer; a second insulating film provided on the first insulating film and the oxidation-resistant conductor film; a third insulating film provided on the second insulating film; and at least one conductor contact portion passing through the third insulating film and the second insulating film to reach the oxidation-resistant conductor film.

With this device, even if, in the step of partly removing the third insulating film and the second insulating film to form the conductor contact portion, treatment that may corrode metal, such as ashing and polymer removal, is carried out on the semiconductor surface with the oxidation-resistant conductor film exposed, corrosion of the interconnect layer can be prevented. On the other hands, all portions of the second insulating film but the portion located on the interconnect layer are not formed thick. Therefore, the dielectric constant between the layers can be kept constant.

The oxidation-resistant conductor film may be a nitrogen introduced layer produced by introducing nitrogen into an upper region of the interconnect layer.

The oxidation-resistant conductor film may be made of titanium nitride.

The interconnect layer comprises a first interconnect layer. The oxidation-resistant conductor film comprises a first oxidation-resistant conductor film provided on the first interconnect layer. The conductor contact portion comprises a first conductor contact portion. The device comprises: a second interconnect layer provided in at least an upper portion of the first insulating film; a second oxidation-resistant conductor film covering the top of the second interconnect layer; and a second conductor contact portion passing through the third insulating film and the second insulating film to reach the second oxidation-resistant conductor film. The first conductor contact portion has a greater upper surface area than the second conductor contact portion. In this case, if the third insulating film and the second insulating film are partly removed in forming these conductor contact portions, the region where the first conductor contact portion is formed is removed deeper. However, since the top of the first interconnect layer is covered with the oxidation resistant film, corrosion of the first interconnect layer can be prevented even though the oxidation resistant film is exposed.

The first conductor contact portion may be of rectangular or strip-like plane, and the second conductor contact portion may be of circular or square plane.

The first interconnect layer and the first conductor contact portion may constitute a seal ring provided in ring shape. In this case, even though the first conductor contact portion serving as the seal ring differs greatly in area from the second conductor contact portion, the structure described above can prevent the first interconnect layer from being exposed.

An element may be provided in the semiconductor substrate, and the interconnect layer may be electrically connected to the element. In this case, when the third insulating film and the second insulating film are partly removed in forming the conductor contact portion, an error would arise in the depth to be removed. Even though such an error arises, it can become difficult to expose the interconnect layer.

The second insulating film is preferably an insulating film of silicon compound containing carbon.

A first method for fabricating a semiconductor device according to the present invention comprises: the step (a) of forming a first insulating film on a semiconductor substrate; the step (b) of forming an interconnect layer in at least an upper portion of the first insulating film; the step (c) of forming a recess in an upper portion of the interconnect layer; the step (d) of forming, on the first insulating film and the interconnect layer, a second insulating film filling the recess; the step (e) of planarizing an upper surface of the second insulating film; the step (f) of forming a third insulating film on the second insulating film after the step (e); the step (g) of removing, using a photoresist as a mask, portions of the third insulating film and the second insulating film located above the interconnect layer so that the removed part does not reach the

interconnect layer, thereby leaving part of the second insulating film on the interconnect layer; and the step (h) of removing the photoresist.

With this method, the portion of the second insulating film located on the interconnect layer can be formed thick. Therefore, in the step (g), the state in which the interconnect layer is not exposed can be kept more certainly. This prevents corrosion of the interconnect layer even though treatment that may corrode metal, such as ashing, is carried out after the step (g). On the other hands, all portions of the second insulating film but the portion located on the interconnect layer are not formed thick. Therefore, in the semiconductor device fabricated by the first method, the dielectric constant between the layers can be kept constant.

In the step (c), the upper portion of the interconnect layer may be recessed by chemical mechanical polishing, dry etching, or wet etching to form the recess. In this case, in addition to the above effect, the effect of improving the adhesion between the first insulating film and the second insulating film can be provided.

In the step (b), a first interconnect layer for a seal ring and a second interconnect layer located in a region surrounded with the first interconnect layer may be formed as the interconnect layer. In the step (c), the recess may be formed in at least an upper portion of the first interconnect layer. In the step (g), portions of the third insulating film and the second insulating film located above the first interconnect layer may be partly removed to form a trench for the seal ring, and portions of the third insulating film and the second insulating film located above the second interconnect layer may be partly removed to form a hole. Since, in this case, the opening area of the trench is greater than that of the hole, the trench is formed to have a greater depth than the hole in the step (g). However, the region of the second insulating film to be formed with the trench is formed thick, whereby it can become difficult to expose the first interconnect layer.

In the step (b), the first interconnect layer may be formed to have a greater width than the second interconnect layer. In this case, the region where the first interconnect layer is formed has a higher area ratio of conductor (metal) than the region where the second interconnect layer is formed. Therefore, when, in the step (c), chemical mechanical polishing or similar treatment is carried out on the first interconnect layer and the second interconnect layer from above, the recess formed in the upper portion of the first interconnect layer can be deepened by the metal area ratio dependence of dishing.

In the step (b), a dummy interconnect layer may be formed beside the first interconnect layer. In this case, the surrounding of the region where the first interconnect layer is formed has a higher area ratio of conductor (metal) than the surrounding of the region where the second interconnect layer is formed. Therefore, when, in the step (c), chemical mechanical polishing or similar treatment is carried out on the first interconnect layer and the second interconnect layer from above, the recess formed in the upper portion of the first interconnect layer can be deepened by the metal area ratio dependence of dishing.

The first method may further comprise, prior to the step (a), the step (i) of forming an element in the semiconductor substrate. In the step (b), the interconnect layer may be formed to be electrically connectable to the element. In this case, even though an error in the depth to be removed arises in the step (g), it can become difficult to expose the interconnect layer.

A second method for fabricating a semiconductor device according to the present invention comprises: the step (a) of forming a first insulating film on a semiconductor substrate; the step (b) of forming an interconnect layer in at least an upper portion of the first insulating film; the step (c) of forming an oxidation-resistant conductor film covering the top of the interconnect layer; the step (d) of forming a second insulating film on the first insulating film and the oxidation-resistant conductor film; the step (e) of forming a third insulating film on the second insulating film; the step (f) of removing, using a photoresist as a mask, portions of the third insulating film and the second insulating film located above the interconnect layer; and the step (g) of removing the photoresist.

With this method, the oxidation-resistant conductor film can cover the top of the interconnect layer. Therefore, in the step (f), even if treatment that may corrode metal, such as ashing, is carried out after exposure of the oxidation-resistant conductor film, corrosion of the interconnect layer can be prevented. On the other hands, all portions of the second insulating film but the portion located on the interconnect layer are not formed thick. Therefore, in the semiconductor device fabricated by the second method, the dielectric constant between the layers can be kept constant.

In the step (c), plasma treatment, wet treatment, or ion implantation may be performed to introduce nitrogen into an upper portion of the interconnect layer, thereby forming the oxidation-resistant conductor film.

In the step (c), a film containing nitrogen may be deposited, as the oxidation-resistant conductor film, on the interconnect layer.

In the step (b), a first interconnect layer for a seal ring and a second interconnect layer located in a region surrounded with the first interconnect layer may be formed as the interconnect layer. In the step (c), an oxidation-resistant conductor film may be formed on the first interconnect layer and the second interconnect layer. In the step (f), portions of the third insulating film and the second insulating film located above the first interconnect layer may be partly removed to form a trench for the seal ring, and portions of the third insulating film and the second insulating film located above the second interconnect layer may be partly removed to form a hole. Since, in this case, the opening area of the trench is greater than that of the hole, the trench is formed to have a greater depth than the hole in the step (f). However, the region of the second insulating film to be formed with the trench is formed thick, whereby it can become difficult to expose the first interconnect layer.

The second method may further comprise, prior to the step (a), the step (h) of forming an element in the semiconductor substrate, and in the step (b), the interconnect layer may be formed to be electrically connectable to the element. In this case, even though an error in the depth to be removed arises in the step (f), it can become difficult to expose the interconnect layer.

BRIEF DESCRIPTION OF THE DRAWINGS

FIGS. **1**A to **1**F are sectional views showing a semiconductor device fabrication method according to a first embodiment.

FIGS. **2**A to **2**F are sectional views showing a semiconductor device fabrication method according to a second embodiment.

FIGS. **3**A to **3**E are sectional views showing a semiconductor device fabrication method according to a third embodiment.

FIGS. **4**A to **4**E are sectional views showing a semiconductor device fabrication method according to a fourth embodiment.

FIGS. **5**A to **5**F are sectional views showing a fabrication method of an interconnect region of a semiconductor device according to a fifth embodiment.

FIGS. **6**A to **6**E are planar views of the first metal interconnect, the hole-contact portion, the second metal interconnect, and the trench-contact portion of embodiments 1-4.

FIGS. **7**A to **7**F are views showing a method of forming a semiconductor device including dummy interconnects **213** (**213***a* and **213***b*), and **313** (**313***a* and **313***b*), which are formed adjacent the first interconnect layer **113** (**113***a* and **113***b*).

DETAILED DESCRIPTION OF THE PREFERRED EMBODIMENTS

First Embodiment

Hereinafter, a method for fabricating a semiconductor device according to a first embodiment of the present invention will be described with reference to FIGS. **1**A to **1**F. FIGS. **1**A to **1**F are sectional views showing the semiconductor device fabrication method of the first embodiment. Note that FIGS. **1**A to **1**F show an interconnect formation region R**1** and a seal ring region R**2** for protecting the interconnect formation region R**1** against outside moisture. The seal ring region R**2** surrounds the sides of the interconnect formation region R**1**.

First, in the step shown in FIG. **1**A, a first insulating film **101** of a silicon oxide film having a thickness of 500 nm is formed on a silicon substrate (not shown). On the first insulating film **101**, a photoresist (not shown) having openings in interconnect trace formation positions is formed by photolithography. The formed photoresist is used as a mask to perform dry etching, thereby removing part of the first insulating film **101** to form interconnect grooves **108** and **109** with a depth of 250 nm. Thereafter, the photoresist is removed, and then a 30 nm-thick stacked film (not shown) of tantalum nitride and tantalum and a 1000 nm-thick copper film (not shown) are formed above the substrate. The copper film and the stacked film are polished using chemical mechanical polishing to form, in the interconnect formation region R**1**, a first metal interconnect **102** consisting of a conductor surface film **102***a* and a metal interconnect film **102***b*. The conductor surface film **102***a* covers the inside surface of the interconnect groove **108**, and the metal interconnect film **102***b* fills the interconnect groove **108** with the conductor surface film **102***a* interposed between the first insulating film **101** and the metal interconnect film **102***b*. During this formation, in the seal ring region R**2**, a second metal interconnect **103** is formed which consists of a conductor surface film **103***a* and a metal interconnect film **103***b*.

In the step shown in FIG. **1**B, by chemical mechanical polishing or selective metal etching with nitric acid or the like, the upper portions of the first metal interconnect **102** and the second metal interconnect **103** are recessed to form recessed shapes (recesses **110**) having depths of about 20 to 40 nm.

Next, in the step shown in FIG. **1**C, on the substrate, a second insulating film **104** is deposited which is made of a silicon carbon nitride film with a thickness of 100 to 150 nm and which fills the recess **110**. In this deposition, as the material for the second insulating film **104**, use may be made of a silicon nitride film, a silicon carbide film, a silicon oxycarbide film, or the like. Also, a structure made by stacking the listed films may be formed as the second insulating film **104**.

At the time of this deposition, depressions affected by the recess shapes of the first metal interconnect **102** and the second metal interconnect **103** are created in the upper surface of the second insulating film **104**.

Then, in the step shown in FIG. **1**D, chemical mechanical polishing, wet etching with sulfuric acid, nitric acid, or the like or etch back is performed to planarize the upper surface of the second insulating film **104**. By this planarization, portions of the second insulating film **104** located on the first metal interconnect **102** and the second metal interconnect **103** have thicknesses of about 70 to 90 nm and the remaining portions thereof have a thickness of 50 nm.

In the step shown in FIG. **1**E, a third insulating film **105** made of a carbon-containing silicon oxide film is deposited above the substrate. In this deposition, as the third insulating film **105**, use may be made of an FSG (fluorinated silicate glass) film, a BPSG (boron phosphorus silicate glass) film, or a porous film. Also, a structure made by stacking the listed films may be used as the third insulating film **105**.

Subsequently to this, by photolithography, a photoresist (not shown) having openings in a hole formation region and a trench formation region is formed on the third insulating film **105**. Then, dry etching is performed using the photoresist as a mask to form a hole (through hole) **106** in the interconnect formation region R**1** and a trench **107** in the seal ring region R**2**. This dry etching is performed so that the hole **106** and the trench **107** extend halfway through the second insulating film **104**. Since, in this etching, the opening area of the trench **107** is greater than that of the hole **106**, the trench **107** is etched deeper. Thereafter, the photoresist is removed by ashing, and polymers created during wet etching and dry etching are removed.

In the step shown in FIG. **1**F, the remaining portions of the second insulating film **104** within the hole and trench are etched, whereby the hole **106** and the trench **107** reach the first metal interconnect **102** and the second metal interconnect **103**, respectively. The resulting hole and trench are filled with a conductor to form a hole-contact portion **106'** made of conductor (referred hereinafter to as a conductor hole-contact portion) in circular or square plane and a trench-contact portion **107'** of conductor (referred hereinafter to as a conductor trench-contact portion) in ring shape. This step is performed after completion of processes that may corrode metal, such as ashing and polymer removal.

With reference to FIG. **1**F again, next description will now be made of the structure of the interconnect and the seal ring of the semiconductor device according to the first embodiment.

As shown in FIG. **1**F, the semiconductor device of the first embodiment includes the interconnect formation region R**1** and the seal ring region R**2** surrounding the sides of the interconnect formation region R**1**. The interconnect formation region R**1** is provided with the first metal interconnect **102**, and the seal ring region R**2** is provided with the second metal interconnect **103**. The first metal interconnect **102** includes the conductor surface film **102***a* covering the surface of the interconnect groove **108** and the metal interconnect film **102***b* covering the conductor surface film **102***a*. Likewise, the second metal interconnect **103** includes the conductor surface film **103***a* covering the surface of the interconnect groove **109** and the metal interconnect film **103***b* provided on the conductor surface film **103***a*. The upper portions of the first metal interconnect **102** and the second metal interconnect **103** are recessed to form the recesses **110**.

The second insulating film **104** is provided on the first insulating film **101**, the first metal interconnect **102** and the second metal interconnect **103**. The second insulating film **104** fills the recess **110**, so that in the second insulating film **104**, the portions thereof located on the first metal intercon-

nect **102** and the second metal interconnect **103** are formed thicker than the other portions thereof. The upper surface of the second insulating film **104** is planarized.

The third insulating film **105** is provided on the second insulating film **104**. The interconnect formation region R**1** is provided with the conductor hole-contact portion **106'** passing through the third insulating film **105** and the second insulating film **104**. Likewise, the seal ring region R**2** is formed with the conductor trench-contact portion **107'**. Thus, in the seal ring region R**2**, the seal ring in ring shape formed of the second metal interconnect **103** and the conductor trench-contact portion **107'** is provided to surround the first metal interconnect **102** and the conductor hole-contact portion **106'** in the interconnect formation region R**1**.

The effects obtained by the first embodiment will be described below in comparison with the conventional device.

In the conventional device, the upper surfaces of the first metal interconnect and the second metal interconnect remain flat, and the second insulating film with a uniform thickness is formed on the first metal interconnect and the second metal interconnect. By such a structure, when the hole and the trench are formed, the trench might pass through the second insulating film to expose the second metal interconnect.

In contrast to this, in the first embodiment, only the portions of the second insulating film **104** located on the first metal interconnect **102** and the second metal interconnect **103** can be formed thick. This prevents the trench **107** from reaching the second metal interconnect **103**. Therefore, even if ashing and polymer removal are performed on the semiconductor surface, the first metal interconnect **102** will not corrode. On the other hands, the portion of the second insulating film **104** located on the first insulating film **101** is not formed thick. Therefore, the dielectric constant between the layers can be kept constant.

Moreover, chemical mechanical polishing or selective etching is performed to recess the upper surfaces of the first metal interconnect **102** and the second metal interconnect **103**. This improves the adhesion between the first insulating film **101** and the second insulating film **104**.

In the first embodiment, by chemical mechanical polishing or the like, the recessed shapes are formed in the upper portions of the first metal interconnect **102** and the second metal interconnect **103**. However, in the present invention, the recessed shape may be formed by utilizing the property of copper in which copper is compressed by heat added thereto. To be more specific, in the step shown in FIG. **1**A, the first metal interconnect **102** and the second metal interconnect **103** are formed and then heat treatment is performed at 200 to 500° C. This compresses the metal interconnect films **102***b* and **103***b* made of copper to form recesses in the upper portions of the first metal interconnect **102** and the second metal interconnect **103**. Also by this procedure, the same effects as those described above can be obtained.

Second Embodiment

Hereinafter, a method for fabricating a semiconductor device according to a second embodiment of the present invention will be described with reference to FIGS. **2**A to **2**F. FIGS. **2**A to **2**F are sectional views showing the semiconductor device fabrication method of the second embodiment. Note that FIGS. **2**A to **2**F show an interconnect formation region R**1** and a seal ring region R**2** for protecting the interconnect formation region R**1** against outside moisture. The seal ring region R**2** surrounds the sides of the interconnect formation region R**1**.

First, in the step shown in FIG. **2**A, a first insulating film **111** of a silicon oxide film having a thickness of 500 nm is formed on a silicon substrate (not shown). On the first insulating film **111**, a photoresist (not shown) having openings in a metal interconnect trace formation region is formed by photolithography. The formed photoresist is used as a mask to perform dry etching, thereby forming an interconnect groove **118** in the interconnect formation region R**1** and an interconnect groove **119** in the seal ring formation region R**2**. In this etching, the width of the interconnect groove **119** is made greater than that of the interconnect groove **118**. To be more specific, when the interconnect groove **118** has a width smaller than 2 μm, the interconnect groove **119** has a width of 2 μm or greater.

Thereafter, the photoresist is removed, and then a 30 nm-thick stacked film (not shown) of tantalum nitride and tantalum and a 1000 nm-thick copper film (not shown) are formed above the substrate. The copper film and the stacked film are polished using chemical mechanical polishing to form, in the interconnect formation region R**1**, a first metal interconnect **112** having a width of 2 μm or greater and consisting of a conductor surface film **112***a* and a metal interconnect film **112***b*. The conductor surface film **112***a* covers the inside surface of the interconnect groove **118**, and the metal interconnect film **112***b* fills the interconnect groove **118** with the conductor surface film **112***a* interposed between the first insulating film **111** and the metal interconnect film **112***b*. During this formation, in the seal ring region R**2**, a second metal interconnect **113** with a width of 2 μm or greater is formed which consists of a conductor surface film **113***a* and a metal interconnect film **113***b*.

In the step shown in FIG. **2**B, chemical mechanical polishing is performed. In this step, the upper portion of the second metal interconnect **113** is recessed by utilizing the metal area ratio dependence of dishing. Details of this step are as follows. If a substrate with metal embedded therein is subjected to chemical mechanical polishing, the depth to which the metal is removed tends to be greater as the percentage of metal contained in the region to be removed rises. In the second embodiment, the second metal interconnect **113** is formed to have a greater width than the first metal interconnect **112**. In other words, the region where the second metal interconnect **113** is formed has a higher ratio of metal per unit area. This allows the upper portion of the second metal interconnect **113** to be recessed deeper than the other regions.

As a substitute for the method in which the depth of the second metal interconnect **113** is made greater than that of the first metal interconnect **112**, the percentage of metal content per unit area may be raised by forming a dummy pattern around the second metal interconnect **113**.

Next, in the step shown in FIG. **2**C, a second insulating film **114** made of a silicon carbon nitride film is deposited on the first insulating film **111**, the first metal interconnect **112** and the second metal interconnect **113**. In this deposition, as the material for the second insulating film **114**, use may be made of a silicon nitride film, a silicon oxide film, a silicon oxycarbide film, or the like. Also, a structure made by stacking the listed films may be formed as the second insulating film **114**.

At the time of this deposition, a depression affected by the recess shape of the second metal interconnect **113** is created in the upper portion of the second insulating film **114**.

Then, in the step shown in FIG. **2**D, chemical mechanical polishing, wet etching, or etch back is performed to planarize the second insulating film **114**.

In the step shown in FIG. **2**E, a third insulating film **115** made of a carbon-containing silicon oxide film is deposited above the substrate. In this deposition, as the third insulating

film **115**, use may be made of an FSG (fluorinated silicate glass) film, a BPSG (boron phosphorus silicate glass) film, or a porous film. Also, a structure made by stacking the listed films may be used as the third insulating film **115**.

Subsequently to this, by photolithography, a photoresist (not shown) having openings in a hole formation region and a trench formation region is formed on the third insulating film **115**. Then, dry etching is performed using the photoresist as a mask to form a hole **116** in the interconnect formation region R**1** and a trench **117** in the seal ring region R**2**. This dry etching is performed so that the trench **117** extends halfway through the second insulating film **114**. Since, in this etching, the opening area of the trench **117** is greater than that of the hole **116**, the trench **117** is etched deeper. Thereafter, the photoresist is removed by ashing, and polymers created during wet etching and dry etching are removed.

In the step shown in FIG. **2**F, the remaining portions of the second insulating film **114** within the hole and trench are removed, whereby the hole **116** and the trench **117** reach the first metal interconnect **112** and the second metal interconnect **113**, respectively. The resulting hole and trench are filled with a conductor to form a conductor hole-contact portion **116'** in circular or square plane and a conductor trench-contact portion **117'** in ring shape. This step is performed after completion of processes that may corrode metal, such as ashing and polymer removal.

With reference to FIG. **2**F again, next description will now be made of the structure of the interconnect and the seal ring of the semiconductor device according to the second embodiment.

As shown in FIG. **2**F, the semiconductor device of the second embodiment includes the interconnect formation region R**1** and the seal ring region R**2** surrounding the sides of the interconnect formation region R**1**. The interconnect formation region R**1** is provided with the first metal interconnect **112**, and the seal ring region R**2** is provided with the second metal interconnect **113**. The second metal interconnect **113** is formed to have a greater width than the first metal interconnect **112**.

The first metal interconnect **112** includes the conductor surface film **112***a* covering the surface of the interconnect groove **118** and the metal interconnect film **112***b* covering the conductor surface film **112***a*. Likewise, the second metal interconnect **113** includes the conductor surface film **113***a* covering the surface of the interconnect groove **119** and the metal interconnect film **113***b* provided on the conductor surface film **113***a*. The upper portion of the second metal interconnect **113** is recessed to form a recess **120**.

The second insulating film **114** is provided on the first insulating film **111**, the first metal interconnect **112** and the second metal interconnect **113**. The second insulating film **114** fills the recess **120**, so that in the second insulating film **114**, the portion thereof located on the second metal interconnect **113** is formed thicker than the other portions thereof. The upper surface of the second insulating film **114** is planarized.

The third insulating film **115** is provided on the second insulating film **114**. The interconnect formation region R**1** is provided with the conductor hole-contact portion **116'** passing through the third insulating film **115** and the second insulating film **114**. Likewise, the seal ring region R**2** is formed with the conductor trench-contact portion **117'**. Thus, in the seal ring region R**2**, the seal ring in ring shape formed of the second metal interconnect **113** and the conductor trench-contact portion **117'** is provided to surround the first metal interconnect **112** and the conductor hole-contact portion **116'** in the interconnect formation region R**1**.

The effects obtained by the second embodiment will be described below in comparison with the conventional device.

In the conventional device, the upper surface of the second metal interconnect remains flat, and the second insulating film with a uniform thickness is formed on the second metal interconnect. By such a structure, when the hole and the trench are formed, the trench might pass through the second insulating film to expose the second metal interconnect.

In contrast to this, in the second embodiment, only the portion of the second insulating film **114** located on the second metal interconnect **113** can be formed thick without increasing the number of fabrication steps of the device. This prevents the trench **117** from reaching the second metal interconnect **113**. Therefore, even if ashing and polymer removal are performed on the semiconductor surface, the first metal interconnect will not corrode. On the other hands, the portion of the second insulating film **114** located on the first insulating film **111** is not formed thick. Therefore, the dielectric constant between the layers can be kept constant.

Moreover, chemical mechanical polishing or etching is performed to recess the upper portion of the second metal interconnect **113**. This improves the adhesion between the first insulating film **111** and the second insulating film **114**.

In the second embodiment, the recessed shape is formed by utilizing the metal area ratio dependence of dishing. However, it may be formed by etching utilizing the pattern density dependence. Alternatively, in the step shown in FIG. **2**B in the present invention, the recessed shape may be formed in the upper portion of the second metal interconnect **113** by performing etching with a photoresist or the like covering all the region but the second metal interconnect **113**. In this case, the same effects as those described above can be obtained except that the number of fabrication steps of the device increases.

In the second embodiment, in performing chemical mechanical polishing in the step shown in FIG. **2**B, slurry with high solubility, such as hydrogen peroxide, may be used. This raises the polishing rate of metal, which allows the second metal interconnect **113** to be recessed deeper.

Third Embodiment

A method for fabricating a semiconductor device according to a third embodiment of the present invention will be described with reference to FIGS. **3**A to **3**E. FIGS. **3**A to **3**E are sectional views showing the semiconductor device fabrication steps of the third embodiment. Note that FIGS. **3**A to **3**E show an interconnect formation region R**1** and a seal ring region R**2** for protecting the interconnect formation region R**1** against outside moisture. The seal ring region R**2** surrounds the sides of the interconnect formation region R**1**.

First, in the step shown in FIG. **3**A, a first insulating film **121** of a silicon oxide film having a thickness of 500 nm is formed on a silicon substrate (not shown). On the first insulating film **121**, a photoresist (not shown) having openings in a metal interconnect trace formation region is formed by photolithography. The formed photoresist is used as a mask to perform dry etching, thereby removing part of the first insulating film **121** to form interconnect grooves **128** and **129** with a depth of 250 nm. Thereafter, the photoresist is removed, and then a 30 nm-thick stacked film (not shown) of tantalum nitride and tantalum and a 1000 nm-thick copper film (not shown) are formed above the substrate. The copper film and the stacked film are polished using chemical mechanical polishing to form, in the interconnect formation region R**1**, a first metal interconnect **122** consisting of a conductor surface film **122***a* and a metal interconnect film **122***b*. The conductor surface film **122***a* covers the inside surface of the interconnect

groove **128**, and the metal interconnect film **122***b* fills the interconnect groove **128** with the conductor surface film **122***a* interposed between the first insulating film **121** and the metal interconnect film **122***b*. During this formation, in the seal ring region R**2**, a second metal interconnect **123** is formed which consists of a conductor surface film **123***a* and a metal interconnect film **123***b*.

In the step shown in FIG. **3**B, plasma treatment using a gas containing nitrogen, wet treatment using ammonia, benzotriazole (BTA), or quinaldic acid, or ion implantation is performed to supply nitrogen to the upper portions of the first metal interconnect **122** and the second metal interconnect **123**. This alters the upper portions of the first metal interconnect **122** and the second metal interconnect **123** into an oxidation resistant film **130**. Simultaneously, this step can improve the adhesion between the first insulating film **121** and a second insulating film **124** that will be formed in a subsequent step.

Next, in the step shown in FIG. **3**C, the second insulating film **124** made of a silicon carbon nitride film is deposited on the first insulating film **121** and the oxidation resistant film **130**. In this deposition, as the material for the second insulating film **124**, use may be made of a silicon nitride film, a silicon carbide film, a silicon oxycarbide film, or the like. Also, a structure made by stacking the listed films may be formed as the second insulating film **124**.

In the step shown in FIG. **3**D, a third insulating film **125** made of a carbon-containing silicon oxide film is deposited above the substrate. In this deposition, as the third insulating film **125**, use may be made of an FSG (fluorinated silicate glass) film, a BPSG (boron phosphorus silicate glass) film, or a porous film. Also, a structure made by stacking the listed films may be used as the third insulating film **125**.

Subsequently to this, by photolithography, a photoresist (not shown) having openings in a hole formation region and a trench formation region is formed on the third insulating film **125**. Then, dry etching is performed using the photoresist as a mask to form a hole **126** in the interconnect formation region R**1** and a trench **127** in the seal ring region R**2**. This dry etching may be performed either so that the trench **127** extends only halfway through the second insulating film **124** or so that the trench **127** passes through the second insulating film **124** to reach the oxidation resistant film **130**. Thereafter, the photoresist is removed by ashing, and polymers created during wet etching and dry etching are removed.

In the step shown in FIG. **3**E, the remaining portions of the second insulating film **124** within the hole and trench are removed, whereby the hole **126** and the trench **127** reach the oxidation resistant film **130**. The resulting hole and trench are filled with a conductor to form a conductor hole-contact portion **126'** in circular or square plane and a conductor trench-contact portion **127'** in ring shape.

With reference to FIG. **3**E again, next description will now be made of the structure of the interconnect and the seal ring of the semiconductor device according to the third embodiment.

As shown in FIG. **3**E, the semiconductor device of the third embodiment includes the interconnect formation region R**1** and the seal ring region R**2** surrounding the sides of the interconnect formation region R**1**. The interconnect formation region R**1** is provided with the first metal interconnect **122**, and the seal ring region R**2** is provided with the second metal interconnect **123**. The first metal interconnect **122** includes the conductor surface film **122***a* covering the surface of the interconnect groove **128** and the metal interconnect film **122***b* covering the conductor surface film **122***a*. Likewise, the second metal interconnect **123** includes the conductor surface film **123***a* covering the surface of the interconnect groove **129** and the metal interconnect film **123***b* provided on the conductor surface film **123***a*. The upper portions of the metal interconnect films **122***b* and **123***b* contain nitrogen and thus are formed into the oxidation resistant film **130**.

The second insulating film **124** is provided on the first insulating film **121**, the first metal interconnect **122** and the second metal interconnect **123**. The third insulating film **125** is provided on the second insulating film **124**. The interconnect formation region R**1** is provided with the conductor hole-contact portion **126'** passing through the third insulating film **125** and the second insulating film **124**. Likewise, the seal ring region R**2** is formed with the conductor trench-contact portion **127'**. Thus, in the seal ring region R**2**, the seal ring in ring shape formed of the second metal interconnect **123** and the conductor trench-contact portion **127'** is provided to surround the first metal interconnect **122** and the conductor hole-contact portion **126'** in the interconnect formation region R**1**.

The effects obtained by the third embodiment will be described below in comparison with the conventional device.

In the conventional device, if a trench reaches the second metal interconnect during formation of the hole pattern and the trench pattern, then the second metal interconnect corrodes in subsequent ashing and polymer removal.

In contrast to this, in the third embodiment, the upper portion of the second metal interconnect **123** is altered into the oxidation resistant film **130**. Therefore, even if ashing and polymer removal are performed in the state in which the trench **127** reaches the second metal interconnect **123**, the upper portion of the second metal interconnect **123** will not corrode. On the other hands, the portion of the second insulating film **124** located on the first insulating film **121** is not formed thick. Therefore, the dielectric constant between the layers can be kept constant.

Moreover, the upper portions of the first metal interconnect **122** and the second metal interconnect **123** are made to contain nitrogen, which also provides the advantage that the etching resistance in the formation of the hole **126** and the trench **127** is improved.

In the step shown in FIG. **3**D, in the case where the hole **126** and the trench **127** reach the oxidation resistant film **130**, the later step of removing portions of the second insulating film **124** remaining between the oxidation resistant film **130** and each of the hole **126** and the trench **127** can be advantageously omitted.

Fourth Embodiment

A method for fabricating a semiconductor device according to a fourth embodiment of the present invention will be described with reference to FIGS. **4**A to **4**E. FIGS. **4**A to **4**E are sectional views showing the semiconductor device fabrication steps of the fourth embodiment. Note that FIGS. **4**A to **4**E show an interconnect formation region R**1** and a seal ring region R**2** for protecting the interconnect formation region R**1** against outside moisture. The seal ring region R**2** surrounds the sides of the interconnect formation region R**1**.

First, in the step shown in FIG. **4**A, a first insulating film **131** of a silicon oxide film having a thickness of 500 nm is formed on a silicon substrate (not shown). On the first insulating film **131**, a photoresist (not shown) having openings in a metal interconnect trace formation region is formed by photolithography. The formed photoresist is used as a mask to perform dry etching, thereby removing part of the first insulating film **131** to form interconnect grooves **138** and **139** with a depth of 250 nm. Thereafter, the photoresist is removed, and

then a 30 nm-thick stacked film (not shown) of tantalum nitride and tantalum and a 1000 nm-thick copper film (not shown) are formed above the substrate. The copper film and the stacked film are polished using chemical mechanical polishing to form, in the interconnect formation region R**1**, a first metal interconnect **132** consisting of a conductor surface film **132***a* and a metal interconnect film **132***b*. The conductor surface film **132***a* covers the inside surface of the interconnect groove **138**, and the metal interconnect film **132***b* fills the interconnect groove **138** with the conductor surface film **132***a* interposed between the first insulating film **131** and the metal interconnect film **132***b*. During this formation, in the seal ring region R**2**, a second metal interconnect **133** is formed which consists of a conductor surface film **133***a* and a metal interconnect film **133***b*.

In the step shown in FIG. **4**B, an oxidation-resistant metal film **140** is selectively deposited on the first metal interconnect **132** and the second metal interconnect **133**. An exemplary material for the metal film **140** is titanium nitride (TiN).

Next, in the step shown in FIG. **4**C, a second insulating film **134** made of a silicon carbon nitride film is deposited on the first insulating film **131** and the metal film **140**. In this deposition, as the material for the second insulating film **134**, use may be made of a silicon nitride film, a silicon carbide film, a silicon oxycarbide film, or the like. Also, a structure made by stacking the listed films may be formed as the second insulating film **134**. Subsequently to the deposition, chemical mechanical polishing, wet etching, or etch back is performed to planarize the second insulating film **134**.

In the step shown in FIG. **4**D, a third insulating film **135** made of a carbon-containing silicon oxide film is deposited above the substrate. In this deposition, as the third insulating film **135**, use may be made of an FSG (fluorinated silicate glass) film, a BPSG (boron phosphorus silicate glass) film, or a porous film. Also, a structure made by stacking the listed films may be used as the third insulating film **135**.

Subsequently to this, by photolithography, a photoresist (not shown) having openings in a hole formation region and a trench formation region is formed on the third insulating film **135**. Then, dry etching is performed using the photoresist as a mask to form a hole **136** in the interconnect formation region R**1** and a trench **137** in the seal ring region R**2**. This dry etching may be performed either so that the trench **137** extends only halfway through the second insulating film **134** or so that the trench **137** passes through the second insulating film **134** to reach the metal film **140**. Thereafter, the photoresist is removed by ashing, and polymers created during wet etching and dry etching are removed.

In the step shown in FIG. **4**E, the remaining portions of the second insulating film **134** within the hole and trench are removed, whereby the hole **136** and the trench **137** reach the first metal interconnect **132** and the second metal interconnect **133**, respectively. The resulting hole and trench are filled with a conductor to form a conductor hole-contact portion **136'** in circular or square plane and a conductor trench-contact portion **137'** in ring shape.

With reference to FIG. **4**E again, next description will now be made of the structure of the interconnect and the seal ring of the semiconductor device according to the fourth embodiment.

As shown in FIG. **4**E, the semiconductor device of the fourth embodiment includes the interconnect formation region R**1** and the seal ring region R**2** surrounding the sides of the interconnect formation region R**1**. The interconnect formation region R**1** is provided with the first metal interconnect **132**, and the seal ring region R**2** is provided with the second metal interconnect **133**. The first metal interconnect **132** includes the conductor surface film **132***a* covering the surface of the interconnect groove **138** and the metal interconnect film **132***b* covering the conductor surface film **132***a*. Likewise, the second metal interconnect **133** includes the conductor surface film **133***a* covering the surface of the interconnect groove **139** and the metal interconnect film **133***b* provided on the conductor surface film **133***a*.

The oxidation-resistant metal film **140** made of, for example, titanium nitride is provided on the first metal interconnect **132** and the second metal interconnect **133**. The second insulating film **134** is provided on the first insulating film **131** and the metal film **140**. The third insulating film **135** is provided on the second insulating film **134**. The interconnect formation region R**1** is provided with the conductor hole-contact portion **136'** passing through the third insulating film **135** and the second insulating film **134**. Likewise, the seal ring region R**2** is formed with the conductor trench-contact portion **137'**. Thus, in the seal ring region R**2**, the seal ring in ring shape formed of the second metal interconnect **133** and the conductor trench-contact portion **137'** is provided to surround the first metal interconnect **132** and the conductor hole-contact portion **136'** in the interconnect formation region R**1**.

In the fourth embodiment, the metal film **140** resistant to oxidation covers the top of the second metal interconnect **133**. Therefore, even if ashing and polymer removal are performed in the state in which the trench **137** reaches the metal film **140**, the upper portion of the second metal interconnect **133** will not corrode. On the other hands, the portion of the second insulating film **134** located on the first insulating film **131** is not formed thick. Therefore, the dielectric constant between the layers can be kept constant.

Moreover, the upper portions of the first metal interconnect **132** and the second metal interconnect **133** are formed with the metal film **140** resistant to oxidation, which also provides the advantage that the etching resistance in the formation of the hole **136** and the trench **137** is improved.

Fifth Embodiment

Hereinafter, a method for fabricating a semiconductor device according to a fifth embodiment of the present invention will be described with reference to FIGS. **5**A to **5**F. FIGS. **5**A to **5**F are sectional views showing a method for fabricating an interconnect region of a semiconductor device according to the fifth embodiment. The foregoing first to fourth embodiments have shown the case where a difference in depth arises between the hole in the interconnect region and the trench in the seal ring region. On the other hands, the fifth embodiment shows the case where in forming a number of hole patterns in the interconnect region, a difference in depth arises among the hole patterns.

First, in the step shown in FIG. **5**A, a first insulating film **141** of a silicon oxide film having a thickness of 500 nm is formed on a silicon substrate (not shown). On the first insulating film **141**, a photoresist (not shown) having openings in a metal interconnect trace formation region is formed by photolithography. The formed photoresist is used as a mask to perform dry etching, thereby removing part of the first insulating film **141** to form an interconnect groove **148** with a depth of 250 nm. Thereafter, the photoresist is removed, and then a 30 nm-thick stacked film (not shown) of tantalum nitride and tantalum and a 1000 nm-thick copper film (not shown) are formed above the substrate. The copper film and the stacked film are polished using chemical mechanical polishing to form a metal interconnect **142** consisting of a conductor surface film **142***a* and a metal interconnect film **142***b*.

The conductor surface film **142***a* covers the inside surface of the interconnect groove **148**, and the metal interconnect film **142***b* fills the interconnect groove **148** with the conductor surface film **142***a* interposed between the insulating film **141** and the metal interconnect film **142***b*.

In the step shown in FIG. **5**B, by chemical mechanical polishing or selective metal etching with nitric acid or the like, the upper portion of the metal interconnect **142** is recessed to form a recessed shape (recess **150**) having a depth of about 20 to 40 nm.

Next, in the step shown in FIG. **5**C, on the substrate, a second insulating film **144** is deposited which is made of a silicon carbon nitride film with a thickness of 100 to 150 nm and which fills the recess **150**. In this deposition, as the material for the second insulating film **144**, use may be made of a silicon nitride film, a silicon carbide film, a silicon oxycarbide film, or the like. Also, a structure made by stacking the listed films may be formed as the second insulating film **144**.

At the time of this deposition, a depression affected by the recess shape of the metal interconnect **142** is created in the top of the second insulating film **144**.

Then, in the step shown in FIG. **5**D, chemical mechanical polishing, wet etching or etch back is performed to planarize the upper surface of the second insulating film **144**. By this planarization, a portion of the second insulating film **144** located on the metal interconnect **142** has a thickness of about 70 to 90 nm and the remaining portions thereof have a thickness of 50 nm.

In the step shown in FIG. **5**E, a third insulating film **145** made of a carbon-containing silicon oxide film is deposited above the substrate. In this deposition, as the third insulating film **145**, use may be made of an FSG (fluorinated silicate glass) film, a BPSG (boron phosphorus silicate glass) film, or a porous film. Also, a structure made by stacking the listed films may be used as the third insulating film **145**.

Subsequently to this, by photolithography, a photoresist (not shown) having openings in a hole formation region is formed on the third insulating film **145**. Then, dry etching is performed using the photoresist as a mask to form holes **146**. This dry etching is performed so that the holes **146** extend halfway through the second insulating film **144**. At the time of completion of this etching, respective holes **146** of multiple hole patterns have different depths due to influences of the pattern density or the like. Thereafter, the photoresist is removed by ashing, and polymers created during wet etching and dry etching are removed.

In the step shown in FIG. **5**F, the remaining portions of the second insulating film **144** within the holes are removed, whereby the holes **146** reach the metal interconnect **142**. The resulting holes are filled with a conductor to form conductor hole-contact portions **146'** in circular or square plane. This step is performed after completion of processes that may corrode metal, such as ashing and polymer removal.

With reference to FIG. **5**F again, next description will now be made of the structure of the interconnect and the conductor hole-contact portion of the semiconductor device according to the fifth embodiment.

As shown in FIG. **5**F, in the semiconductor device of the fifth embodiment, the metal interconnect **142** which includes the conductor surface film **142***a* and the metal interconnect film **142***b* covering the top of the conductor surface film **142***a* is provided in the first insulating film **141**. The upper portion of the metal interconnect **142** is recessed to form the recess **150**.

The second insulating film **144** is provided on the first insulating film **141** and the metal interconnect **142**. The second insulating film **144** fills the recess **150**, so that in the second insulating film **144**, the portion thereof located on the metal interconnect **142** is formed thicker than the other portions thereof. The upper surface of the second insulating film **144** is planarized.

The third insulating film **145** is provided on the second insulating film **144**. Further, the conductor hole-contact portion **146'** is provided which passes through the third insulating film **145** and the second insulating film **144**.

The effects obtained by the fifth embodiment will be described below in comparison with the conventional device.

In the conventional device, the upper surface of the metal interconnect remains flat, and the second insulating film and the third insulating film are formed on the metal interconnect. If multiple types of hole patterns are formed in such a structure, the formed hole patterns have different hole depths due to nonuniform pattern densities or fabrication process variations. This might cause some of the hole patterns to pass through the second insulating film to reach the metal interconnect. Such a possibility increases particularly in the case where a number of hole patterns are formed in the device.

In contrast to this, in the fifth embodiment, only the portion of the second insulating film **144** located on the metal interconnect **142** can be formed thick. This prevents the holes **146** from reaching the metal interconnect **142**. Therefore, even if ashing and polymer removal are performed on the semiconductor surface, the metal interconnect **142** will not corrode. On the other hands, the portion of the second insulating film **144** located on the first insulating film **141** is not formed thick. Therefore, the dielectric constant between the layers can be kept constant.

Moreover, chemical mechanical polishing or selective etching is performed to recess the upper surface of the metal interconnect **142**. This improves the adhesion between the first insulating film **141** and the second insulating film **144**.

The fifth embodiment is composed by applying the method of the first embodiment to the case where multiple types of hole patterns are formed in an interconnect region. However, in the present invention, methods of the third and fourth embodiments can also be applied to that case.

In the first to fourth embodiments, description has been made of the case where the conductor trench-contact portion is formed in ring shape to use the portion as the seal ring. Alternatively, the portion may be formed in rectangular shape or strip shape to use the portion as part of an electrode.

What is claimed is:

1. A method for fabricating a semiconductor device, comprising:

the step (a) of forming a first insulating film over a semiconductor substrate;

the step (b) of forming an interconnect layer in at least an upper portion of the first insulating film;

the step (c) of forming an oxidation-resistant conductor film covering the top of the interconnect layer;

the step (d) of forming a second insulating film on the first insulating film and the oxidation-resistant conductor film;

the step (e) of forming a third insulating film on the second insulating film;

the step (f) of removing, using a photoresist as a mask, portions of the third insulating film and the second insulating film located over the interconnect layer until the oxidation-resistant conductor film is exposed in one step; and

the step (g) of removing the photoresist.

2. The method of claim **1**,

wherein in the step (c), plasma treatment, wet treatment, or ion implantation is performed to introduce nitrogen into

an upper portion of the interconnect layer, thereby forming the oxidation-resistant conductor film.

3. The method of claim **1**,

wherein in the step (c), a film containing nitrogen is deposited, as the oxidation-resistant conductor film, on the interconnect layer.

4. The method of claim **1**,

wherein in the step (b), a first interconnect layer and a second interconnect layer are formed as the interconnect layer,

in the step (c), an oxidation-resistant conductor film is formed on the first interconnect layer and the second interconnect layer, and

in the step (f), portions of the third insulating film and the second insulating film located over the first interconnect layer are removed to form a trench, and portions of the third insulating film and the second insulating film located over the second interconnect layer are removed to form a hole.

5. The method of claim **1**, further comprising, prior to the step (a), the step (h) of forming an element in the semiconductor substrate,

wherein in the step (b), the interconnect layer is formed to be electrically connectable to the element.

6. A method for fabricating a semiconductor device, comprising:

the step (a) of forming a first insulating film over a semiconductor substrate;

the step (b) of forming a first interconnect layer and a second interconnect layer in at least an upper portion of the first insulating film;

the step (c) of forming an oxidation-resistant conductor film covering tops of the first interconnect layer and the second interconnect layer;

the step (d) of forming a second insulating film on the first insulating film and the oxidation-resistant conductor film;

the step (e) of forming a third insulating film on the second insulating film;

the step (f) of forming a trench pattern by removing portions of the third insulating film and the second insulating film located over the first interconnect layer, and forming a part of a hole pattern by removing portions of the third insulating film and the second insulating film located over the second interconnect layer; and

the step (g) of removing portions of the second insulating film located over the second interconnect layer until the hole pattern reaches the oxidation-resistant conductor film.

7. The method of claim **6**, wherein

in the step (f), when the trench pattern is formed, portions of the third insulating film and the second insulating film located over the first interconnect layer are removed until the oxidation-resistant conductor film is exposed in one step.

* * * * *