IEEE Std 802.11h™-2003
(Amendment to IEEE Std 802.11™, 1999 Edition (Reaff 2003),
as amended by
IEEE Stds 802.11a™-1999, 802.11b™-1999,
802.11b™-1999/Cor 1-2001, 802.11d™-2001,
and 802.11g™-2003)

IEEE Standards

802.11h™

IEEE Standard for Information technology— Telecommunications and information exchange between systems— Local and metropolitan area networks— Specific requirements

Part 11: Wireless LAN Medium Access Control (MAC) and Physical Layer (PHY) specifications

Amendment 5: Spectrum and Transmit Power Management Extensions in the 5 GHz band in Europe

IEEE Computer Society

Sponsored by the
LAN/MAN Standards Committee

This amendment is an approved IEEE Standard. It will be incorporated into the base standard in a future edition.

Published by
The Institute of Electrical and Electronics Engineers, Inc.
3 Park Avenue, New York, NY 10016-5997, USA

14 October 2003

Print: SH95172
PDF: SS95172

Authorized licensed use limited to: MIT. Downloaded on June 28,2026 at 19:19:50 UTC from IEEE Xplore. Restrictions apply.

Recognized as an
American National Standard (ANSI)

IEEE Std 802.11h™-2003
(Amendment to IEEE Std 802.11™, 1999 Edition (Reaff 2003),
as amended by
IEEE Stds 802.11a™-1999, 802.11b™-1999,
802.11b™-1999/Cor 1-2001, 802.11d™-2001,
and 802.11g™-2003)

IEEE Standard for Information technology— Telecommunications and information exchange between systems— Local and metropolitan area networks— Specific requirements

Part 11: Wireless Medium Access Control (MAC) and Physical Layer (PHY) specifications:

Amendment 5: Spectrum and transmit power management extensions in the 5 GHz band in Europe

Sponsor
LAN/MAN Committee
of the
IEEE Computer Society

Approved 29 December 2003
American National Standard Institute

Approved 11 September 2003
IEEE-SA Standards Board

Abstract: This amendment specifies the extensions to IEEE 802.11™ for wireless local area networks (WLANs) providing mechanisms for dynamic frequency selection (DFS) and transmit power control (TPC) that may be used to satisfy regulatory requirements for operation in the 5 GHz band in Europe.
Keywords: dynamic frequency selection (DFS), local area network (LAN), transmit power control (TPC)

The Institute of Electrical and Electronics Engineers, Inc.
3 Park Avenue, New York, NY 10016-5997, USA

Copyright © 2003 by the Institute of Electrical and Electronics Engineers, Inc.
All rights reserved. Published 14 October 2003. Printed in the United States of America.

IEEE and 802 are registered trademarks in the U.S. Patent & Trademark Office, owned by the Institute of Electrical and Electronics Engineers, Incorporated.

Print: ISBN 0-7381-3818-5 SH95172
PDF: ISBN 0-7381-3819-3 SS95172

No part of this publication may be reproduced in any form, in an electronic retrieval system or otherwise, without the prior written permission of the publisher.

Authorized licensed use limited to: MIT. Downloaded on June 28,2026 at 19:19:50 UTC from IEEE Xplore. Restrictions apply.

IEEE Standards documents are developed within the IEEE Societies and the Standards Coordinating Committees of the IEEE Standards Association (IEEE-SA) Standards Board. The IEEE develops its standards through a consensus development process, approved by the American National Standards Institute, which brings together volunteers representing varied viewpoints and interests to achieve the final product. Volunteers are not necessarily members of the Institute and serve without compensation. While the IEEE administers the process and establishes rules to promote fairness in the consensus development process, the IEEE does not independently evaluate, test, or verify the accuracy of any of the information contained in its standards.

Use of an IEEE Standard is wholly voluntary. The IEEE disclaims liability for any personal injury, property or other damage, of any nature whatsoever, whether special, indirect, consequential, or compensatory, directly or indirectly resulting from the publication, use of, or reliance upon this, or any other IEEE Standard document.

The IEEE does not warrant or represent the accuracy or content of the material contained herein, and expressly disclaims any express or implied warranty, including any implied warranty of merchantability or fitness for a specific purpose, or that the use of the material contained herein is free from patent infringement. IEEE Standards documents are supplied "**AS IS**."

The existence of an IEEE Standard does not imply that there are no other ways to produce, test, measure, purchase, market, or provide other goods and services related to the scope of the IEEE Standard. Furthermore, the viewpoint expressed at the time a standard is approved and issued is subject to change brought about through developments in the state of the art and comments received from users of the standard. Every IEEE Standard is subjected to review at least every five years for revision or reaffirmation. When a document is more than five years old and has not been reaffirmed, it is reasonable to conclude that its contents, although still of some value, do not wholly reflect the present state of the art. Users are cautioned to check to determine that they have the latest edition of any IEEE Standard.

In publishing and making this document available, the IEEE is not suggesting or rendering professional or other services for, or on behalf of, any person or entity. Nor is the IEEE undertaking to perform any duty owed by any other person or entity to another. Any person utilizing this, and any other IEEE Standards document, should rely upon the advice of a competent professional in determining the exercise of reasonable care in any given circumstances.

Interpretations: Occasionally questions may arise regarding the meaning of portions of standards as they relate to specific applications. When the need for interpretations is brought to the attention of IEEE, the Institute will initiate action to prepare appropriate responses. Since IEEE Standards represent a consensus of concerned interests, it is important to ensure that any interpretation has also received the concurrence of a balance of interests. For this reason, IEEE and the members of its societies and Standards Coordinating Committees are not able to provide an instant response to interpretation requests except in those cases where the matter has previously received formal consideration.

Comments for revision of IEEE Standards are welcome from any interested party, regardless of membership affiliation with IEEE. Suggestions for changes in documents should be in the form of a proposed change of text, together with appropriate supporting comments. Comments on standards and requests for interpretations should be addressed to:

Secretary, IEEE-SA Standards Board
445 Hoes Lane
P.O. Box 1331
Piscataway, NJ 08855-1331
USA

Note: Attention is called to the possibility that implementation of this standard may require use of subject matter covered by patent rights. By publication of this standard, no position is taken with respect to the existence or validity of any patent rights in connection therewith. The IEEE shall not be responsible for identifying patents for which a license may be required by an IEEE standard or for conducting inquiries into the legal validity or scope of those patents that are brought to its attention.

Authorization to photocopy portions of any individual standard for internal or personal use is granted by the Institute of Electrical and Electronics Engineers, Inc., provided that the appropriate fee is paid to Copyright Clearance Center. To arrange for payment of licensing fee, please contact Copyright Clearance Center, Customer Service, 222 Rosewood Drive, Danvers, MA 01923 USA; +1 978 750 8400. Permission to photocopy portions of any individual standard for educational classroom use can also be obtained through the Copyright Clearance Center.

Authorized licensed use limited to: MIT. Downloaded on June 28,2026 at 19:19:50 UTC from IEEE Xplore. Restrictions apply.

Introduction

(This introduction is not part of IEEE 802.11h-2003, IEEE Standard for Information technology—Telecommunications and information exchange between systems—Local and metropolitan area networks—Specific requirements—Part 11: Wireless Medium Access Control (MAC) and Physical Layer (PHY) specifications: Amendment # 5: Spectrum and Transmit Power Management Extensions in the 5 GHz band in Europe.)

IEEE Std 802.11h-2003

IEEE Std 802.11h-2003 provides mechanisms for dynamic frequency selection (DFS) and transmit power control (TPC) that may be used to satisfy regulatory requirements for operation in the 5 GHz band in Europe.

Patents

Attention is called to the possibility that implementation of this standard may require use of subject matter covered by patent rights. By publication of this standard, no position is taken with respect to the existence or validity of any patent rights in connection therewith. The IEEE shall not be responsible for identifying patents for which a license may be required by an IEEE standard or for conducting inquiries into the legal validity or scope of those patents that are brought to its attention. A patent holder has filed a statement of assurance that it will grant licenses under these rights without compensation or under reasonable rates and nondiscriminatory, reasonable terms and conditions to all applicants desiring to obtain such licenses. The IEEE makes no representation as to the reasonableness of rates and/or terms and conditions of the license agreements offered by patent holders. Further information may be obtained from the IEEE Standards Department.

Interpretations and errata

Interpretations and errata associated with this amendment may be found at one of the following Internet locations:

— http://standards.ieee.org/reading/ieee/interp/

— http://standards.ieee.org/reading/ieee/updates/errata/

Participants

When the IEEE 802.11 Working Group approved this amendment, it had the following membership:

Stuart J. Kerry, *Chair*

Al Petrick and **Harry R. Worstell,** *Vice-Chairs*

Tim Godfrey, *Secretary*

Brian Mathews, *Publicity Standing Committee*

Teik-Kheong Tan, *Wireless Next-Generation Standing Committee*

John Fakatselis, *Chair Task Group e*

Duncan Kitchin, *Vice-Chair Task Group e*

David Bagby, *Chair Task Group f*

Matthew B. Shoemake, *Chair Task Group g*

David Halasz, *Chair Task Group i*

Copyright © 2003 IEEE. All rights reserved.

Authorized licensed use limited to: MIT. Downloaded on June 28,2026 at 19:19:50 UTC from IEEE Xplore. Restrictions apply.

IPR2025-01307; Samsung
Ex. 1051 - Page 4

When the IEEE 802.11 Working Group approved this amendment, the Task Group H had the following membership:

Mika Kasslin, *Chair*
Carl Temme, *Study Group Chair*
Andrew Myles, *Editor*
Evan Green, *Secretary*

Steven Aafjes
Osama Aboul-Magd
Robert Achatz
Tomoko Adachi
Hossam Afifi
Brian G. Agee
Jae-Young Ahn
Hiroshi Akagi
Masaaki Akahane
James Aldis
Thomas Alexander
Vali Ali
Areg Alimian
James Allen
James G. Allen
Richard Allen
Keith Amann
Song H. An
Dov Andelman
Geoffrey T. Anderson
Merwyn Andrade
Carl F. Andren
David C. Andrus
Kofi Anim-Appiah
Hidenori Aoki
Takashi Arakawa
Mitch Aramaki
Takashi Aramaki
William A. Arbaugh
Larry Arnett
Hiroshi Asai
Brian G. Asee
Mehdi Asgharzadeh
Naiel Askar
Arthur Astrin
Malik Audeh
Geert A. Awater
Ender Ayanoglu
Shahrnaz Azizi
Floyd Backes
Jin-Seok Bae
David Bagby
Venkat Bahl
Jay Bain
Dennis J. Baker
Bala Balachander
John Balian
Raja Banerjea
Boyd Bangerter
Simon Barber
Thomas Barber
Farooq Bari
Sina Barkeshli
Michael Barkway
David Barr
John Barr
Kevin M. Barry
Charles R. Bartel
Anuj Batra
Burak Baysal
Glenn R. Beckett
Tomer Bentzion
Mathilde Benveniste
Armen Berjikly
Fred Berkowitz
Brett Bernath
Don Berry
Jan Biermann
A. Mark Bilstad
Bjorn Bjerke
Simon Black
Dennis Bland
Jan Boer
James Bohac
Satish Bommareddy
Herve Bonneville
William M. Brasier
Jennifer A Bray
Jim Brennan
Jean-Claude Brien
Ronald Brockmann
Phillip Brownlee
Phillip Lynn Brownlee
Alex Bugeja
Alistair G. Buttar
Pete Cain
Richard Cam
Nancy Cam-Winget
Bill Carney
Pat Carson
Broady Cash
Michael Cave
Anthony Caviglia
Kiran Challiarali
Ginny Chan
Jayant Chande
Eugene Chang
Jeffrey Chang
Kisoo Chang
Shue-Lee Chang
Chi-Chao Chao
Clint Chaplin
Hung-Kun Chen
Jay Jui-Chieh Chen
Ye Chen
Yi-Ming Chen
Hong Cheng
Greg Chesson
Lieshu Chiang
Alan Chickinsky
Francois Po_Shin Chin
Aik Chindapol
Po-Lin Chiu
Sangsung Choi
Sunghyun Choi
Woo-Yong Choi
Ojas T. Choksi
Per Christoffersson
Jim Christy
Mooi Chuah
Simon Chung
Simon Chun-Yu Chung
Song Ci
Frank Ciotti
Richard Clayton
Ken Clements
John T. Coffey
Terry Cole
Anthony Collins
Paul Congdon
Craig Conkling
Steven W. Conner
Dennis Connors
Charles Cook
Todor Cooklev
Kenneth D. Cornett
Mary Cramer
William Crilly
Richard Cross
Glen Crowder
Steven Crowley
Ramon Adriano Cruz
Terence J. Cummings
Anand Dabak
Nora Dabbous
William Dai
Bipin D. Dama
Thomas V. D'Amico
Khamphuc Daulasim
Barry Davis
Rolf De Vegt
Javier del Prado
Udi Delgoshen
Karl L. Denninghoff
Darryl Denton
Michael Derby
Richard DeSalvo
Jimmy H. Dho
Wim Diepstraten
Lakshminath Dondeti
Bob Donnan
Glenn Dooley
Bretton Lee Douglas
Alon Drory
Simon John Duggins
Baris B. Dundar
Larry Dunn
Roger Durand

Copyright © 2003 IEEE. All rights reserved.
Authorized licensed use limited to: MIT. Downloaded on June 28,2026 at 19:19:50 UTC from IEEE Xplore. Restrictions apply.
IPR2025-01307; Samsung
Ex. 1051 - Page 5

Eryk Dutkiewicz
Mary DuVal
Donald E. Eastlake III
Dennis Eaton
Peter Ecclesine
Brian S. Edmonston
Jon Edney
Jack Ehrhardt
Jan Eiliger
Natrajan Ekambaram
Jason L. Ellis
Darwin Engwer
Greg Ennis
Frederick Enns
Guy Erb
Vinko Erceg
Randal L. Erman
Noam Eshel
Javier Espinoza
Steven Ettles
Christoph Euscher
John Fakatselis
Lars Falk
Rainer Falk
Steve Fantaske
Charles S. Farlow
Augustin J. Farrugia
Alex Feldman
Weishi Feng
Andres Fernstedt
Nestor Fesas
Gerhard Fettweis
Mark W. Fidler
Norm Finn
Matthew James Fischer
Tom Flaherty
Jeff R. Foerster
Brian Forde
Ruben Formoso
David Fotland
Sheila E. Frankel
Martin Freedman
David Fridley
Michael Froning
Taketo Fukui
Shinya Fukuoka
John Nels Fuller
Marcus Gahler
Gilles Ganault
Rodrigo Garcés
James Gardner
Atul Garg
Sanchin Garg
Al Garrett
Michael Genossar
Noam Geri
Vafa Ghazi
Monisha Ghosh
Ian Gifford
James Gilb
Jeffrey Gilbert
Bindu Gill
Tim Godfrey
Yan Siang Goh
Wataru Gohda
Peter Goidas
Patrick S. Gonia
Jim Goodman
Gilbert Goodwill
Yuval Goren
Alex Gorokhov
Andrew J. Gowans
Rik Graulus
Martin Gravenstein
Gordon Gray
William H. Gray
John Green
Larry Green
Michael Green
Patrick Green
Kerry Greer
John Griesing
Daqing Gu
Srikanth Gummadi
Ajay Gummalla
Qiang Guo
Bert Gyselinck
Dongwoon Hahn
Fred Haisch
David Halasz
Steve D. Halford
Robert J Hall
Neil Hamady
Rabah Hamdi
Mark Hamilton
Robert E Hancock
Christopher J. Hansen
Yasuo Harada
Thomas Hardjono
Daniel N. Harkins
Thomas Haslestad
Amer A. Hassan
Vann Hasty
James P. Hauser
Yutaka Hayakawa
Morihiko Hayashi
Ryoji Hayashi
Kevin Hayes
Victor Hayes
Haixiang He
Xiaoning He
Robert Heile
Richard Hibbard
Gerrit Hiddink
Dan Hilberman
Garth Hillman
Christopher Hinsz
Jun Hirano
Mikael Hjelm
Jin-Meng Ho
James Hobza
Maarten Hoeben
Michael Hoghooghi
Allen Hollister
Keith Holt
Satoru Hori
William Horne
Srinath Hosur
Russell Housley
Frank P Howley, Jr
Chin-Yu Hsu
Dave Hudak
John Hughes
Grant Hulse
Ronald Hunt
David Hunter
Keith Huntington
Chuck Hwang
Eon Hwang
Gyung Ho Hwang
Hyosun Hwang
Syang-Myau Hwang
David Hytha
Young Guen Hyun
Hiroshi Ide
L. V. Jagannatha
Ho-In Jeon
Taehyun Jeon
Young-Sik Jeon
Moo Ryong Jeong
De Ji
Habetha Joerg
Henric A. Johnson
Walter Johnson
Cesar Augusto Johnston
David Johnston
Jari Jokela
Doug Jones
V. K. Jones
Bobby Jose
Tyan-Shu Jou
Seiji Kachi
Daryl Kaiser
Srinivas Kandala
You Kang
You Sung Kang
Martin Kappes
Isuke Karaki
Jeyhan Karaoguz
Kevin Karcz
Jaime E. Kardontchik
Murat Karsi
Scoff Kasin
Srinivas Katar
Yasuhiro Katsube
Eiji Kawase
Khurram Kazi
Kris Kelkar
Joy H. Kelly
Patrick Kelly
Richard Kennedy
Nick Kerry
Stuart J. Kerry
Vytas Kezys
Andrew K. Khieu
Jamshid Khun-Jush
Poh Boon Kiat
Ryoji Kido
Byoung-Jo Kim
Daeik Kim
Dongkyu Kim

Copyright © 2003 IEEE. All rights reserved.

Authorized licensed use limited to: MIT. Downloaded on June 28,2026 at 19:19:50 UTC from IEEE Xplore. Restrictions apply.

Dooseok Kim
Dukhyun Kim
Edward Kim
Hyung-Jin Kim
Je Woo Kim
Joonsuk Kim
Myoung Soo Kim
Steve Kim
Sunny Kim
Yongbum Kim
Yong-Sun Kim
Young Kim
Young Hwan Kim
Young-Ju Kim
Young-soo Kim
Ziv Kimhi
Kursat Kimyacioglu
Eric J. King
Wayne King
Duncan Kitchin
Günter Kleindl
Mark Klerer
Kevin Klesenski
Cees Klik
David Kline
Julius Knapp
Toshiya Kobashi
Srinivasa Kocherla
Blaine Kohl
Philip S. Kossin
Lalit Kotecha
John M. Kowalski
Bruce P. Kraemer
Gopal Krishnan
Thomas Kuehnel
Sandeep Kumar
Yutaka Kuno
Bill Kunz
Masahiro Kuroda
Denis Kuwahara
Dong-hoon Kwak
Joe Kwak
ChangYeul Kwon
Oh Sang Kwon
Paul A. Lambert
Kevin Lan
David S. Landeta
John B. Langley
Jim Lansford
Colin Lanzl
Kim Laraqui
Jon LaRosa
Choi Law
Lionel Le Scolan
David J. Leach, Jr.
Chun Lee
Dongjun Lee
Hyeon-Jae Lee
Insun Lee
Jay Hwa Lee
K. C. Lee
Kab Joo Lee
Ki-Cheol Lee
Myung Jong Lee
Nag Yeon Lee
Richard van Leeuwen
Martin Lefkowitz
Uriel Lemberger
Jean Luc Lembert
Onno Letanche
Shmuel Levy
Mike Lewis
Liang Li
Pen Li
Quinn Li
Sheung Li
Jie Liang
John Liebetreu
Daniel B. Lieman
Peter J. Ligertwood
Jae-Woo Lim
Yong Je Lim
Isaac Lim Wei Lih
Huai-An Lin
Huashih A. Lin
Sheng Lin
Victor Chiwu Lin
Stanley Ling
Titus Lo
Manuel Lobeira
Peter Loc
Patrick Lopez
Fernando López-de-Victoria
Hui-Ling Lou
Marc Loutrel
Willie Lu
Xiaolin Lu
David Lucia
Luke Ludeman
Hui Luo
Yeong-Chang Maa
Takuji Maekawa
Akira Maeki
Osamu Maeshima
Mats Erik Magnusson
Tom M. Mahoney
Douglas Makishima
Tim Maleck
Majid Malek
Jouni Kalevi Malinen
Krishna Malladi
Alexander A. Maltsev
Stefan Mangold
Mahalingam Mani
Shrikant Manivannan
Paul Mantilla
Bob Mapes
Jonn Martell
Naotaka Maruyama
Paul Marzec
Ralph Mason
Brian Mathews
Jo-Ellen F. Mathews
Mark Mathews
Noriaki Matsuno
Sudheer Matta
Thomas Maufer
Conrad Maxwell
Michael McLaughlin
Justin McCann
Stephen McCann
Kelly McClellan
Gary McCoy
Bill McFarland
Gary McGarr
Timothy McGovern
Michael D. McInnis
Bill McIntosh
James Mclean
Frank McLinn
Justin P. McNew
Jorge Medina
Michael Medina
Mehul Mehta
Pratik Mehta
Robert C. Meier
Graham Melville
Klaus Meyer
David G. Michelson
Scott F Migaldi
Leonard E Miller
Robert Miller
Reiner Mim
Masahiro Mimura
Ral Xiao Min
Julian E. Minard
Lin Tzu Ming
Vinod R Mirchandani
Partho Mishra
David James Mitton
Shunji Miura
Fanny Mlinarsky
Sachin Mody
Sanjay Moghe
Behzad Mohebbi
Rishi Mohindra
Bryan Jeffery Moles
James Mollenauer
Peter R. Molnar
Anton Monk
Leo Monteban
Michael Montemurro
Jae Moon
Mike Moreton
Yuichi Morioka
Roy Morris
Robert Moskowitz
Oliver Muelhens
Joe Mueller
Michael Mueller
Takeshi Murakami
Peter Murphy
Boyd Murray
Peter Murray
Guruprasad I Naik
Ravi Narasimhan
Panos E. Nastou
Nersi Nazari
Slobodan Nedic

Copyright © 2003 IEEE. All rights reserved.
Authorized licensed use limited to: MIT. Downloaded on June 28,2026 at 19:19:50 UTC from IEEE Xplore. Restrictions apply.
IPR2025-01307; Samsung
Ex. 1051 - Page 7

Kevin Negus
Robert J. Neilsen
Bahva Nelakanti
David B. Nelson
Dan Nemits
Chiu Ngo
Terry Ngo
Tuan Nguyen
Qiang Ni
Kazuaki Nimura
Toshi Nishida
Gunnar Nitsche
Puthiya Nizar
Erwin R. Noble
Hiroshi Nomura
Tzvetan D. Novkov
Ivan Oakes
Kei Obara
Hideaki Odadgiri
Paul Odlyzko
Karen O'Donoghue
Bob O'Hara
Yoshihiro Ohtani
Eric J. Ojard
Kazuhiro Okanoue
Dean E. Oliver
Kim J. Olsiewski
Chandra S. Olson
Tim Olson
Takeshi Onizawa
Lior Ophir
Ian Oppermann
Toshikuni Osogoe
Richard H. Paine
Mike Paljug
Stephen R. Palm
Carl Panasik
Aleksandar Pance
Subra Parameswaran
John B. Pardee
Jong Ae Park
Jonghun Park
Michael Park
Seung-Keun Park
Taegon Park
Alan Parrish
Glenn Parsons
Dave Patton
Jeff Paul
Lizy Paul
Eldad Perahia Perahia
Sebastien Perrot
Al Petrick
James Everett Pigg
Leo Pluswick
Dennis Yu Kiu Pong
Stephen Pope
James Portaro
Al Potter
Satish Premanathan
Mike Press
Clifford Prettie
James A. Proctor
Henry Ptasinski
Hugo Pues
Anuj Puri
Aleksandar Purkovic
Jim Raab
Raad Raad
Ali Raissinia
Thierry Rakotoarivelo
Murali Ramadoss
Ravindra Ranasinghe
Noman Rangwala
Murli M Rao
Yaron Rashi
Gregg Rasor
Kamlesh Rath
Stephen G. Rayment
Chakradher Reddy
Ivan Reede
Einan Regev
John Regnier
Stanley A. Reible
Anthony Reid
Joe Repice
Danny Rettig
Edward Reuss
Valentine Joseph Rhodes
Bill Rhyne
David B. Ribner
Mark Rich
Jim Richards
Terry Richards
David Richkas
Maximilian Riegel
John Rinderknecht
Carlos A. Rios
Benno Ritter
David Robak
Randy Roberts
Walt Roehr
Hyun Suk Roh
Benjamin Rolfe
Kent G. Rollins
Gregory Roman
Stefan Rommer
Gary Roosevelt
Jon Rosdahl
Pejman Roshan
Brian Rosnov
Philippe Rouzet
Reinhard Ruckriem
Mikael Rudberg
Chandos Rypinski
Michael J. Sabin
Ali Sadri
Shin Saito
Katsumi Sakai
Tetsu Sakata
Shoji Sakurai
Kenichi Sakusabe
Antonio E. Salloum Salazar
Janne Salmi
Hemanth Sampath
Yukitoshi Sanada
Sumeet Sandhu
Sunny Sandhu
John H. Santhoff
Anil K. Sanwalka
Nicholas J. Sargologos
Shanuj Sarin
Hideaki Sato
Masatoshi Sato
Takashi Sato
John Sauer
Kurt Sauter
Hans G. Schantz
Jerry Schoemann
Sid Schrum
Erik Schylander
Thomas Scribner
Michael Seals
Joe Sensendorf
Krishna Seshadri
Caspar Settels
Ankur Shah
Nimish Shah
N. K. Shankaranarayanan
Sandeep K. Sharma
S. Shelton
Tamara Shelton
Yangmin Shen
Veronica Sherard
Matthew Sherman
Tamara Sophia Sheton
Ming Sheu
Masaaki Shida
Shusaku Shimada
Brian Byung-Cheol Shin
Cheol ho Shin
Junho Shin
Daisuke Shinomiya
Etan A. Shirron
Guy Shochet
Matthew B. Shoemake
Lance Crispin Shrader
William Shvodia
Salvador Sibecas
Michael Sim
Sebastien Simoens
Floyd Simpson
Manoneet Singh
Sandeep K. Singhal
Hasse Sinivaara
Stan Skafidas
David Skellern
Roger Ray Skidmore
Donald I. Sloan
Kevin Smart
Andrew Smith
David Smith
Douglas A. Smith
Wendell Smith
Paul A. Snopko
Yoram Solomon
Ho-Kyung Son

Copyright © 2003 IEEE. All rights reserved.

Authorized licensed use limited to: MIT. Downloaded on June 28,2026 at 19:19:50 UTC from IEEE Xplore. Restrictions apply.

IPR2025-01307; Samsung
Ex. 1051 - Page 8

Pyeong-Jung Song
Wei-Jei Song
Amjad Soomro
Massimo Sorbara
David F. Sorrells
Essam Sourour
Gary Spiess
Manikantan Srinivasan
Dorothy V. Stanley
William K. Steck
Greg Steele
Adrian Stephens
William M. Stevens
Carl R. Stevenson
Fred Stivers
Warren E. Strand
Paul F. Struhsaker
Thomas W. Studwell
Michael Su
Yuhsiang Su
Gary Sugar
Hiroki Sugimoto
Hajime Suzuki
Hirokazu Tagiri
Ehab Tahir
Masahiro Takagi
Mineo Takai
Katsumi Takaoka
Minoru Takemoto
Nir Tal
Tsuyoshi Tamaki
Jasper Tan
Pek-Yew Tan
Teik-Kheong Tan
Ming Tang
Takuma Tanimoto
Kenichi Taniuchi
Mamoru Tashiro
H. C. Taylor
Larry Taylor
Roger Teague
Carl Temme
John Terry
Walter Thirion
Kevin Thomaszios
Lars E. Thon
Peter Thornycroft
Jerry A. Thrasher
Yasuo Tobita
Troy Tom
James D. Tomcik
David W. Trainor
John Trick
Jonathon Trostle
Walt Trzaskus
Allen Tsai
Joseph Tsai
Jean Tsao
Chih C. Tsien
Tom Tsoulogiannis
Kwei Tu
Sandra Turner
Stephen E. Turner
Marcos Tzannes
Tomoyuki Udagawa
Takashi Ueda
Toru Ueda
Naoki Urano
Hidemi Usuba
Gary Vacon
Chandra Vaidyanathan
Harmen R. van As
Hans van der Ven
Niels Van Erven
Wim J. van Houtum
Richard van Nee
Lamar Van Wagenen
Patrick Vandenameele
Sarah Elizabeth Vargas-Hurlston
Dmitri Varsanofiev
Narasimhan Venkatesh
Jagannatha L. Venkatesha
Madan Venugopal
Ingrid Verbauwhede
Sarosh Vesuna
Fernando Victoria
Bhupender Virk
George Vlantis
Nanci Vogtli
Aleksey Voitovich
Dennis Volpano
Toan X. Vu
Klaus Wacker
Brian C. Wadell
Tim Wakeley
Jesse R. Walker
Brad Wallace
Thierry Walrant
Vivek G. Wandile
Chao-Chun Wang
Joe Wang
Stanley Wang
Wheng Wang
Christopher Ware
Fujio Watanabe
Katsumi Watanabe
Yoshinori Watanabe
Andrew Watts
Mati Wax
Mark Webster
Mathew Welborn
Kimberly Welch
Michael W. Wellman
Menzo Wentink
David A. Wheeler
Robert Whelan
Stephen R. Whitesell
Douglas L. Whiting
Michael Wilhoyte
Michael Glenn Williams
Peter K. Williams
Richard G. C. Williams
Steven D. Williams
Steven Wilson
Christopher Wingert
Jeffrey John Wojtiuk
Jin Kue Wong
Kensing Wong
Timothy G. Wong
Stephen R. Wood
Edward G Woodrow
Patrick A. Worfolk
Harry Worstell
Charles R. Wright
Micheal Wright
Frank Wu
Gang Wu
Liwen Wu
Shyhtsun Wu
Yang Xiao
Sheng-Bo Xu
Shugong Xu
Steven Xu
Hirohisa Yamaguchi
James Chih-Shi Yee
Jung Yee
Kazim O. Yildiz
Don Yonce
Kit Yong
Charles You
Albert Young
Heejung Yu
Patrick Yu
Hon Mo Yung
Erol Yurtkuran
Nakache Yves-paul
Chris Zegelin
Jin Zhang
Zhun Zhong
Glen Zorn
Bachar Zouari
Robert J. Zuccherato
Arnoud Zwemmer
Jim Zyren

Copyright © 2003 IEEE. All rights reserved.
Authorized licensed use limited to: MIT. Downloaded on June 28,2026 at 19:19:50 UTC from IEEE Xplore. Restrictions apply.
IPR2025-01307; Samsung
Ex. 1051 - Page 9

Major contributions were received from the following individuals:

Simon Black
Peter Ecclesine
Chris Hansen
Bill MacFarland
Andrew Myles
David Skellern
Amjad Soomro

The following members of the balloting committee voted on this amendment. Balloters may have voted for approval, disapproval, or abstention.

Butch Anton
David Bagby
John Barnett
Mitchell Buchman
Todd Cooper
Kimara Chin
Keith Chow
Terry Cole
Michael Coletta
Todor Cooklev
Javier del Prado Pavon
Guru Dutt Dhingra
Thomas Dineen
Peter Ecclesine
Keng Fong
Avraham Freedman
Michele Gammel
Andrew Germano
James Gilb
Tim Godfrey
Robert Heile
Srinivas Kandala
Stuart Kerry
Cees Klik
John Kowalski
Pi-Cheng Law
Daniel Levesque
Kyle Maus
George Miao
Apurva Mody
Mike Moreton
Andrew Myles
Paul Nikolich
Erwin Noble
Bob O'Hara
Satoshi Oyama
Sebastien Perrot
Albert A. Petrick
Subbu Ponnuswamy
Hugo Pues
Vikram Punj
Charles Rice
Maximilian Riegel
Jon Rosdahl
Thomas Ruf
Durga Prasad Satapathy
Michael Seals
Matthew J. Sherman
Neil Shipp
Kevin Smart
Amjad Soomro
Clay Stocklin
Minoru Takemoto
Jerry Thrasher
Toru Ueda
Dmitri Varsanofiev
Hung-yu Wei
Harry R. Worstell
Jung Yee
Oren Yuen
Arnoud Zwemmer

When the IEEE-SA Standards Board approved this amendment on 11 September 2003, it had the following membership:

Don Wright, *Chair*
Howard M. Frazier, *Vice Chair*
Judith Gorman, *Secretary*

H. Stephen Berger
Joseph A. Bruder
Bob Davis
Richard DeBlasio
Julian Forster*
Toshio Fukuda
Arnold M. Greenspan
Raymond Hapeman
Donald N. Heirman
Laura Hitchcock
Richard H. Hulett
Anant Kumar Jain
Lowell G. Johnson
Joseph L. Koepfinger*
Tom McGean
Steve M. Mills
Daleep C. Mohla
William J. Moylan
Paul Nikolich
Gary S. Robinson
Malcolm V. Thaden
Geoffrey O. Thompson
Doug Topping
Howard L. Wolfman

*Member Emeritus

Also included are the following nonvoting IEEE-SA Standards Board liaisons:

Alan Cookson, *NIST Representative*
Satish K. Aggarwal, *NRC Representative*

Don Messina
IEEE Standards Project Editor

Copyright © 2003 IEEE. All rights reserved.

Authorized licensed use limited to: MIT. Downloaded on June 28,2026 at 19:19:50 UTC from IEEE Xplore. Restrictions apply.
IPR2025-01307; Samsung
Ex. 1051 - Page 10

Contents

1. Overview ... 1

1.2 Purpose ... 1

2. Normative references ... 2

3. Definitions ... 2

4. Abbreviations and acronyms ... 3

5. General description ... 3

5.3 Logical service interfaces ... 3
5.3.1 Station service (SS) ... 3
5.4 Overview of the services ... 3
5.4.4 Spectrum management services ... 3
5.4.4.1 TPC ... 4
5.4.4.2 DFS ... 4
5.5 Relationships between services ... 4
5.7 Message information contents that support the services ... 5
5.7.2 Association ... 5
5.7.3 Reassociation ... 5
5.7.8 Spectrum management ... 5

7. Frame formats ... 6

7.1 MAC frame formats ... 6
7.1.3 Frame fields ... 6
7.1.3.1 Frame Control field ... 6
7.2 Format of individual frame types ... 6
7.2.3 Management frames ... 6
7.2.3.1 Beacon frame format ... 6
7.2.3.4 Association Request frame format ... 7
7.2.3.6 Reassociation Request frame format ... 7
7.2.3.9 Probe Response frame format ... 7
7.2.3.12 Action frame format ... 8
7.3 Management frame body components ... 8
7.3.1 Fixed fields ... 8
7.3.1.4 Capability Information field ... 8
7.3.1.7 Reason Code field ... 9
7.3.1.9 Status Code field ... 9
7.3.1.11 Action field ... 10
7.3.2 Information elements ... 10
7.3.2.15 Power Constraint element ... 11
7.3.2.16 Power Capability element ... 11
7.3.2.17 TPC Request element ... 12
7.3.2.18 TPC Report element ... 12
7.3.2.19 Supported Channels element ... 13
7.3.2.20 Channel Switch Announcement element ... 13
7.3.2.21 Measurement Request element ... 14
7.3.2.22 Measurement Report element ... 17

Copyright © 2003 IEEE. All rights reserved.

Authorized licensed use limited to: MIT. Downloaded on June 28,2026 at 19:19:50 UTC from IEEE Xplore. Restrictions apply.

IPR2025-01307; Samsung
Ex. 1051 - Page 11

7.3.2.23 Quiet element ... 22
7.3.2.24 IBSS DFS element ... 22
7.4 Action frame format details ... 23
7.4.1 Spectrum management action details ... 23
7.4.1.1 Measurement Request frame format ... 23
7.4.1.2 Measurement Report frame format ... 24
7.4.1.3 TPC Request frame format ... 24
7.4.1.4 TPC Report frame format ... 25
7.4.1.5 Channel Switch Announcement frame format ... 25

9. MAC sublayer functional description ... 26

9.2 Distributed coordination function (DCF) ... 26
9.2.3 Interframe space (IFS) ... 26
9.2.3.2 Point coordination function (PCF) IFS (PIFS) ... 26

10. Layer management ... 26

10.3 MAC sublayer management entity (MLME) service access point (SAP) interface ... 26
10.3.2 Scan ... 26
10.3.2.2 MLME-SCAN.confirm ... 26
10.3.6 Associate ... 27
10.3.6.1 MLME-ASSOCIATE.request ... 27
10.3.7 Reassociate ... 27
10.3.7.1 MLME-REASSOCIATE.request ... 27
10.3.10 Start ... 28
10.3.10.1 MLME-START.request ... 28
10.3.11 Spectrum management protocol layer model ... 29
10.3.12 Measurement request ... 33
10.3.12.1 MLME-MREQUEST.request ... 33
10.3.12.2 MLME-MREQUEST.confirm ... 34
10.3.12.3 MLME-MREQUEST.indication ... 35
10.3.13 Channel measurement ... 35
10.3.13.1 MLME-MEASURE.request ... 36
10.3.13.2 MLME-MEASURE.confirm ... 36
10.3.14 Measurement report ... 37
10.3.14.1 MLME-MREPORT.request ... 37
10.3.14.2 MLME-MREPORT.confirm ... 38
10.3.14.3 MLME-MREPORT.indication ... 39
10.3.15 Channel switch ... 39
10.3.15.1 MLME-CHANNELSWITCH.request ... 39
10.3.15.2 MLME-CHANNELSWITCH.confirm ... 40
10.3.15.3 MLME-CHANNELSWITCH.indication ... 41
10.3.15.4 MLME-CHANNELSWITCH.response ... 42
10.3.16 TPC request ... 42
10.3.16.1 MLME-TPCADAPT.request ... 43
10.3.16.2 MLME-TPCADAPT.confirm ... 43

11. MLME ... 44

11.5 TPC procedures ... 44
11.5.1 Association based on transmit power capability ... 45
11.5.2 Specification of regulatory and local maximum transmit power levels ... 45
11.5.3 Selection of a transmit power ... 46

Copyright © 2003 IEEE. All rights reserved.

Authorized licensed use limited to: MIT. Downloaded on June 28,2026 at 19:19:50 UTC from IEEE Xplore. Restrictions apply.
IPR2025-01307; Samsung
Ex. 1051 - Page 12

11.5.4 Adaptation of the transmit power ... 46
11.6 DFS procedures ... 46
11.6.1 Association based on supported channels ... 47
11.6.2 Quieting channels for testing ... 47
11.6.3 Testing channels for radars ... 48
11.6.4 Discontinuing operations after detecting radars ... 48
11.6.5 Detecting radars ... 48
11.6.6 Requesting and reporting of measurements ... 48
11.6.7 Selecting and advertising a new channel ... 49
11.6.7.1 Selecting and advertising a new channel in an infrastructure BSS ... 50
11.6.7.2 Selecting and advertising a new channel in an IBSS ... 50

17. Orthogonal frequency division multiplexing (OFDM) PHY specification for the 5 GHz band ... 52

17.3 OFDM physical layer convergence procedure (PLCP) sublayer ... 52
17.3.8 Phycial medium dependent (PMD) operating specifications (general) ... 52
17.3.8.3 Operating channel frequencies ... 52
17.3.9 PMD transmit specifications ... 53
17.3.9.1 Transmit power levels ... 53

Annex A (normative) Protocol Implementation conformance Statement (PICS) proforma ... 54

A.4 PICS proforma—IEEE Std 802.11, 1999 Edition ... 54
A.4.3 IUT configuration ... 54
A.4.12 Spectrum management extensions ... 54

Annex D (normative) ASN.1 encoding of the MAC and PHY MIB ... 57

Copyright © 2003 IEEE. All rights reserved.
Authorized licensed use limited to: MIT. Downloaded on June 28,2026 at 19:19:50 UTC from IEEE Xplore. Restrictions apply.
IPR2025-01307; Samsung
Ex. 1051 - Page 13

Figures

Figure 27—Capability Information fixed field 9
Figure 33a—Action field 10
Figure 46a—Power Constraint element format 11
Figure 46c—TPC Request element format 12
Figure 46d—TPC Report element format 12
Figure 46b—Power Capability element format 12
Figure 46e—Supported Channels element format 13
Figure 46g—Measurement Request element format 14
Figure 46h—Measurement Request Mode field 14
Figure 46f—Channel Switch Announcement element format 14
Figure 46i—Measurement Request field format for a basic request 16
Figure 46j—Measurement Request field format for a CCA request 17
Figure 46k—Measurement Request field format for a RPI histogram request 17
Figure 46l—Measurement Report element format 18
Figure 46m—Measurement Report Mode field 18
Figure 46n—Measurement Report field format for a basic report 19
Figure 46o—Map field format 19
Figure 46p—Measurement Report field format for a CCA report 20
Figure 46q—Measurement Report field format for an RPI histogram report 21
Figure 46r—Quiet element format 22
Figure 46s—IBSS DFS element format 22
Figure 46t—Channel Map field format 22
Figure 46v—Measurement Report frame body format 24
Figure 46u—Measurement Request frame body format 24
Figure 46x—TPC Report frame body format 25
Figure 46y—Channel Switch Announcement frame body format 25
Figure 46w—TPC Request frame body format 25
Figure 67a—Layer management model 29
Figure 67b—Measurement request—accepted 30
Figure 67c—Measurement request - rejected 31
Figure 67d—TPC adaptation 32
Figure 67e—Channel switch 33

Copyright © 2003 IEEE. All rights reserved.

Authorized licensed use limited to: MIT. Downloaded on June 28,2026 at 19:19:50 UTC from IEEE Xplore. Restrictions apply.
IPR2025-01307; Samsung
Ex. 1051 - Page 14

Tables

Table 1—Valid type and subtype combinations ... 6
Table 5—Beacon frame body ... 6
Table 7—Association Request frame body ... 7
Table 9—Reassociation Request frame body ... 7
Table 12—Probe Response frame body ... 7
Table 15a—Action frame body ... 8
Table 18—Reason codes ... 9
Table 19—Status codes ... 9
Table 19a—Category values ... 10
Table 20—Element IDs ... 10
Table 20a—Summary of use of Enable, Request, and Report bits ... 15
Table 20b—Measurement Type definitions for measurement requests ... 16
Table 20c—Measurement Type definitions for measurement reports ... 19
Table 20d—RPI definitions for an RPI histogram report ... 21
Table 20e—Spectrum management Action field values ... 23
Table 26a—Allowed measurement requests ... 48
Table 94—Valid operating channel numbers by regulatory domain and band ... 52
Table 95—Transmit power level for the United States by regulatory domain ... 53

Copyright © 2003 IEEE. All rights reserved.
Authorized licensed use limited to: MIT. Downloaded on June 28,2026 at 19:19:50 UTC from IEEE Xplore. Restrictions apply.
IPR2025-01307; Samsung
Ex. 1051 - Page 15

Authorized licensed use limited to: MIT. Downloaded on June 28,2026 at 19:19:50 UTC from IEEE Xplore. Restrictions apply.

IEEE Standard for
Information technology—
Telecommunications and information exchange between systems—
Local and metropolitan area networks—
Specific requirements

Part 11: Wireless Medium Access Control (MAC) and Physical Layer (PHY) specifications:

Amendment 5: Spectrum and Transmit Power Management Extensions in the 5 GHz band in Europe

[This amendment is based on IEEE Std 802.11™, 1999 Edition (Reaff 2003), as amended by IEEE Std 802.11a™-1999, IEEE Std 802.11b™-1999, IEEE Std 802.11b-1999/Cor 1-2001, IEEE Std 802.11d™-2001, and IEEE Std 802.11g™-2003.]

NOTE—The editing instructions contained in this amendment define how to merge the material contained herein into the existing base standard and its amendments to form the comprehensive standard.

The editing instructions are shown in ***bold italic***. Three editing instructions are used: change, delete, and insert. ***Change*** is used to make small corrections in existing text or tables. The editing instruction specifies the location of the change and describes what is being changed either by using ~~strikethrough~~ (to remove old material) or underscore (to add new material). ***Delete*** removes existing material. ***Insert*** adds new material without disturbing the existing material. Insertions may require renumbering. If so, renumbering instructions are given in the editing instructions. Editorial notes will not be carried over into future editions.

1. Overview

1.2 Purpose

Insert the following item at the end of the list at the end of 1.2:

— Defines mechanisms for dynamic frequency selection (DFS) and transmit power control (TPC) that may be used to satisfy regulatory requirements for operation in the 5 GHz band in Europe. The regulations and conformance tests are listed in Clause 2.

Copyright © 2003 IEEE. All rights reserved.

Authorized licensed use limited to: MIT. Downloaded on June 28,2026 at 19:19:50 UTC from IEEE Xplore. Restrictions apply.
IPR2025-01307; Samsung
Ex. 1051 - Page 17

2. Normative references

Insert the following citations at the appropriate locations in Clause 2:

ERC/DEC/(99)23, ERC Decision of 29 November 1999 on the harmonized frequency bands to be designated for the introduction of High Performance Radio Local Area Networks (HIPERLANs).[1]

ETSI EN 301 893, Broadband Radio Access Networks (BRAN); 5 GHz high performance RLAN; Part 2: Harmonized EN covering essential requirements of article 3.2 of the R&TTE Directive.[2]

3. Definitions

Insert the following definitions in alphabetical order into Clause 3, renumbering as necessary:

3.53 dynamic frequency selection (DFS): Facilities mandated to satisfy requirements in some regulatory domains for radar detection and uniform channel spreading in the 5 GHz band. These facilities may also be used for other purposes, such as automatic frequency planning.

3.54 dynamic frequency selection (DFS) owner: A station (STA) in an independent basic service set (IBSS) that takes responsibility for selecting the next channel after radar is detected operating in a channel. Due to the nature of IBSSs, it cannot be guaranteed that there will be a single DFS owner at any particular time and the protocol is robust to this situation.

3.55 effective isotropic radiated power (EIRP): The equivalent power of a transmitted signal in terms of an isotropic (omnidirectional) radiator. Normally the EIRP equals the product of the transmitter power and the antenna gain (reduced by any coupling losses between the transmitter and antenna).

3.56 5 GHz band in Europe: Refers to the nineteen 20 MHz channels between 5 GHz and 6 GHz in which wireless local area network (WLAN) operation is allowed in the CEPT regulatory domain.

3.57 link margin: Ratio of the received signal power to the minimum desired by the station (STA). The STA may incorporate rate information and channel conditions, including interference, into its computation of link margin. The specific algorithm for computing the link margin is implementation dependent.

3.58 receive power: Mean power measured at the antenna connector.

3.59 received power indicator (RPI): A quantized measure of the received power level as seen at the antenna connector.

3.60 transmit power: The effective isotropic radiated power (EIRP) when referring to the operation of a 5 GHz 802.11™ orthogonal frequency division multiplexing (OFDM) physical layer (PHY) in a country where so regulated.

3.61 transmit power control (TPC): Facilities mandated to satisfy requirements in some regulatory domains for maximum transmit power and transmit power mitigation in the 5 GHz band. These facilities may also be used for other purposes, e.g., reduction of interference, range control reduction of power consumption.

---

[1]ERC documents are available from European Radiocommunications Office, Midtermolen 1, DK-2100, Copenhagen, Denmark (http://www.ero.dk).

[2]ETSI documents are available from ETSI, 650 Route des Lucioles, F-06921 Sopia Antipolis Cedex, France (http://www.etsi.org).

Copyright © 2003 IEEE. All rights reserved.
Authorized licensed use limited to: MIT. Downloaded on June 28,2026 at 19:19:50 UTC from IEEE Xplore. Restrictions apply.
IPR2025-01307; Samsung
Ex. 1051 - Page 18

3.62 uniform spreading: A regulatory requirement per ERC/DEC/(99)23 for a channel selection mechanism that provides uniform loading across a minimum set of channels in the regulatory domain.[3]

4. Abbreviations and acronyms

Insert the following abbreviations in alphabetical order into Clause 4:

DFS	dynamic frequency selection
RLAN	radio local area network
RPI	receive power indicator
TPC	transmit power control

5. General description

5.3 Logical service interfaces

Insert the following items at the end of the list of architectural services in 5.3 as follows:

j) DFS

k) TPC

5.3.1 Station service (SS)

Insert the following items at the end of the list of SSs in 5.3.1 as follows:

e) DFS

f) TPC

5.4 Overview of the services

Change the first paragraph in 5.4 as follows:

There are ~~nine~~ several services specified by IEEE 802.11. Six of the services are used to support medium access control (MAC) service data unit (MSDU) delivery between stations (STAs). Three of the services are used to control IEEE 802.11 LAN access and confidentiality. Two of the services are used to provide spectrum management.

Insert the following text for 5.4.4 through 5.4.4.2 after 5.4.3.3 as follows:

5.4.4 Spectrum management services

Two services are required to satisfy requirements in some regulatory domains for operation in the 5 GHz band. These services are called transmit power control (TPC) and dynamic frequency selection (DFS).

[3]For information on references, see Clause 2.

Copyright © 2003 IEEE. All rights reserved.

Authorized licensed use limited to: MIT. Downloaded on June 28,2026 at 19:19:50 UTC from IEEE Xplore. Restrictions apply.
IPR2025-01307; Samsung
Ex. 1051 - Page 19

5.4.4.1 TPC

ERC/DEC/(99)23 requires radio local area networks (RLANs) operating in the 5 GHz band to use transmitter power control, involving specification of a regulatory maximum transmit power and a mitigation requirement for each allowed channel, to reduce interference with satellite services. The TPC service is used to satisfy this regulatory requirement.

The TPC service provides for the following:

— Association of STAs with an access point (AP) in a basic service set (BSS) based on the STAs power capability.

— Specification of regulatory and local maximum transmit power levels for the current channel.

— Selection of a transmit power for each transmission in a channel within constraints imposed by regulatory requirements.

— Adaptation of transmit power based on a range of information, including path loss and link margin estimates.

5.4.4.2 DFS

ERC/DEC/(99)23 requires RLANs operating in the 5 GHz band to implement a mechanism to avoid co-channel operation with radar systems and to ensure uniform utilization of available channels. The DFS service is used to satisfy these regulatory requirements.

The DFS service provides for the following:

— Association of STAs with an AP in a BSS based on the STAs' supported channels.

— Quieting the current channel so it can be tested for the presence of radar with less interference from other STAs.

— Testing channels for radar before using a channel and while operating in a channel.

— Discontinuing operations after detecting radar in the current channel to avoid interference with radar.

— Detecting radar in the current and other channels based on regulatory requirements.

— Requesting and reporting of measurements in the current and other channels.

— Selecting and advertising a new channel to assist the migration of a BSS or independent BSS (IBSS) after radar is detected.

5.5 Relationships between services

Change the following list in 5.5 as follows:

a) Class 1 frames (permitted from within States 1, 2, and 3):

  2) Management frames

    i) Probe request/response

    ii) Beacon

    iii) Authentication: Successful authentication enables a STA to exchange Class 2 frames. Unsuccessful authentication leaves the STA in State 1.

    iv) Deauthentication: Deauthentication notification when in State 2 or State 3 changes the STA's state to State 1. The STA shall become authenticated again prior to sending Class 2 frames.

    v) Announcement traffic indication message (ATIM)

    <u>vi) Action</u>

Copyright © 2003 IEEE. All rights reserved.
Authorized licensed use limited to: MIT. Downloaded on June 28,2026 at 19:19:50 UTC from IEEE Xplore. Restrictions apply.
IPR2025-01307; Samsung
Ex. 1051 - Page 20

5.7 Message information contents that support the services

5.7.2 Association

Change the following list in 5.7.2 as follows:

Association request

— Message type: Management
— Message subtype: Association request
— Information items:
  - IEEE address of the STA initiating the association
  - IEEE address of the AP with which the initiating STA will associate
  - ESS ID
  - Power capability
  - Supported channels
— Direction of message: From STA to AP

5.7.3 Reassociation

Change the following list in 5.7.3 as follows:

Reassociation request

— Message type: Management
— Message subtype: Reassociation request
— Information items:
  - IEEE address of the STA initiating the reassociation
  - IEEE address of the AP with which the initiating STA will reassociate
  - IEEE address of the AP with which the initiating STA is currently associated
  - ESS ID
  - Power capability
  - Supported channels
— Direction of message:
  - From STA to AP (The AP with which the STA is requesting reassociation)

Insert the following text for 5.7.8 after 5.7.7 as follows:

5.7.8 Spectrum management

The spectrum management services are supported by the following action message:

Spectrum Management Action

— Message type: Management
— Message subtype: Spectrum Management Action
— Information items:
  - Action identification
  - Dialog token
  - Action dependent information
  - Direction of message: From STA to STA

Copyright © 2003 IEEE. All rights reserved.

Authorized licensed use limited to: MIT. Downloaded on June 28,2026 at 19:19:50 UTC from IEEE Xplore. Restrictions apply.

7. Frame formats

7.1 MAC frame formats

7.1.3 Frame fields

7.1.3.1 Frame Control field

7.1.3.1.2 Type and Subtype fields

Insert the Management/Action row before the Management/Reserved row and change the Management/ Reserved row in Table 1 as follows:

Table 1—Valid type and subtype combinations

Type value b3 b2	Type description	Subtype value b7 b6 b5 b4	Subtype description
00	Management	1101	Action
00	Management	~~1101~~1110–1111	Reserved

7.2 Format of individual frame types

7.2.3 Management frames

7.2.3.1 Beacon frame format

Change the order 11 information field and insert the order 14–18 information fields in Table 5 as follows:

Table 5—Beacon frame body

Order	Information	Notes
11	Country	The Country information element shall be present when dot11MultiDomainCapabilityEnabled is true or dot11SpectrumManagementRequired is true.
14	Power Constraint	Power Constraint element shall be present if dot11SpectrumManagementRequired is true.
15	Channel Switch Announcement	Channel Switch Announcement element may be present if dot11SpectrumManagementRequired is true.
16	Quiet	Quiet element may be present if dot11SpectrumManagementRequired is true.
17	IBSS DFS	IBSS DFS element shall be present if dot11SpectrumManagementRequired is true in an IBSS.
18	TPC Report	TPC Report element shall be present if dot11SpectrumManagementRequired is true.

Copyright © 2003 IEEE. All rights reserved.
Authorized licensed use limited to: MIT. Downloaded on June 28,2026 at 19:19:50 UTC from IEEE Xplore. Restrictions apply.
IPR2025-01307; Samsung
Ex. 1051 - Page 22

7.2.3.4 Association Request frame format

Insert the order 6 and 7 information fields in Table 7 as follows:

Table 7—Association Request frame body

Order	Information	Notes
6	Power Capability	The Power Capability element shall be present if dot11SpectrumManagementRequired is true.
7	Supported Channels	The Supported Channels element shall be present if dot11SpectrumManagementRequired is true.

7.2.3.6 Reassociation Request frame format

Insert the order 7 and 8 information fields in Table 9 as follows:

Table 9—Reassociation Request frame body

Order	Information	Notes
7	Power Capability	The Power Capability element shall be present if dot11SpectrumManagementRequired is true.
8	Supported Channels	The Supported Channels element shall be present if dot11SpectrumManagementRequired is true.

7.2.3.9 Probe Response frame format

Change Table 12 from order 10 information field to the end of the table as follows:

Table 12—Probe Response frame body

Order	Information	Notes
10	Country	Included if dot11MultiDomainCapabilityEnabled or dot11SpectrumManagementRequired is true.
11	FH Parameters	FH Parameters, as specified in 7.3.2.10, may be included if dot11MultiDomainCapabilityEnabled is true.
12	FH Pattern Table	FH Pattern Table information, as specified in 7.3.2.11, may be included if dot11MultiDomainCapability-Enabled is true.
13	Power Constraint	Shall be included if dot11SpectrumManagementRequired is true.
14	Channel Switch Announcement	May be included if dot11SpectrumManagementRequired is true.
15	Quiet	May be included if dot11SpectrumManagementRequired is true.

Copyright © 2003 IEEE. All rights reserved.

Authorized licensed use limited to: MIT. Downloaded on June 28,2026 at 19:19:50 UTC from IEEE Xplore. Restrictions apply.

Table 12—Probe Response frame body *(continued)*

Order	Information	Notes
16	IBSS DFS	Shall be included if dot11SpectrumManagementRequired is true in an IBSS.
17	TPC Report	Shall be included if dot11SpectrumManagementRequired is true.
18		Reserved
19	ERP Information	The ERP Information element is present within Beacon frames generated by STAs using ERP PHYs and is optionally present in other cases.
20	Extended Supported Rates	The Extended Supported Rates element is present whenever there are more than eight supported rates, and it is optional otherwise.
~~13~~21–*n*	Requested information elements	Elements requested by the Request information element of the Probe Request frame.

Insert 7.2.3.12 after 7.2.3.11 as follows:

7.2.3.12 Action frame format

The frame body of a management frame of subtype Action contains the information shown in Table 15a.

Table 15a—Action frame body

Order	Information
1	Action

7.3 Management frame body components

7.3.1 Fixed fields

7.3.1.4 Capability Information field

Change the second paragraph in 7.3.1.4 as follows:

The length of the Capability Information field is 2 octets. The Capability Information field consists of the following subfields: extended service set (ESS), IBSS, contention-free (CF)-Pollable, CF-Poll Request, Privacy, Short Preamble, Packet Binary Convolutional Code (PBCC), Channel Agility, Spectrum Management, Short Slot Time, and DSSS-OFDM. The format of the Capability Information field is as illustrated in Figure 27. No subfield is supplied for ERP as a STA supports ERP operation if it includes all of the Clause 19 mandatory rates in its supported rate set.

Copyright © 2003 IEEE. All rights reserved.
Authorized licensed use limited to: MIT. Downloaded on June 28,2026 at 19:19:50 UTC from IEEE Xplore. Restrictions apply.
IPR2025-01307; Samsung
Ex. 1051 - Page 24

Change the contents of Figure 27 as shown:

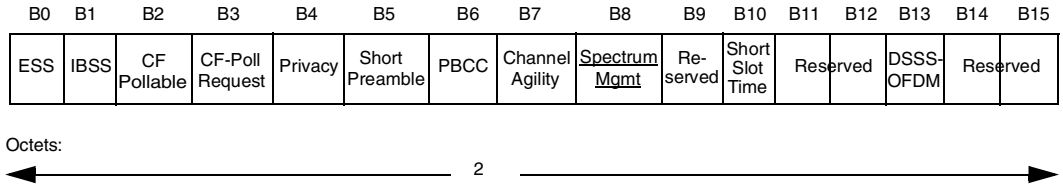

Figure 27—Capability Information fixed field

Insert the following text after the paragraph that starts "Bit 7 of the ..." in 7.3.1.4:

A STA shall set the Spectrum Management subfield in the Capability Information field to 1 if the STA's dot11SpectrumManagementRequired is true; otherwise, it shall be set to 0.

7.3.1.7 Reason Code field

Insert reason codes 10 and 11 and change the Reserved reason code row in Table 18 as follows:

Table 18—Reason codes

Reason code	Meaning
10	Disassociated because the information in the Power Capability element is unacceptable
11	Disassociated because the information in the Supported Channels element is unacceptable
~~10~~12–65 535	Reserved

7.3.1.9 Status Code field

Insert status codes 22-24 and change the Reserved status code row in Table 19 as follows:

Table 19—Status codes

Status code	Meaning
22	Association request rejected because Spectrum Management capability is required
23	Association request rejected because the information in the Power Capability element is unacceptable
24	Association request rejected because the information in the Supported Channels element is unacceptable
~~22~~25–65 535	Reserved

Copyright © 2003 IEEE. All rights reserved.

Authorized licensed use limited to: MIT. Downloaded on June 28,2026 at 19:19:50 UTC from IEEE Xplore. Restrictions apply.

Insert 7.3.1.11 after 7.3.1.10 and renumber figures and tables as necessary:

7.3.1.11 Action field

The Action field provides a mechanism for specifying extended management actions. The format of the Action field is shown in Figure 33a.

	Category	Action Details
Octets:	1	variable

Figure 33a—Action field

The Category field shall be set to one of the nonreserved values shown in Table 19a. If a STA receives a unicast Action frame with an unrecognized Category field or some other syntactic error and the most significant bit (MSB) of the Category field set to 0, then the STA shall return the Action frame to the source without change except that the MSB of the Category field shall be set to 1.

The Action Details field contains the details of the action. The details of the actions allowed in each category are described in the appropriate subclause referenced in Tab1e 19a.

Table 19a—Category values

Name	Value	See subclause
Spectrum management	0	7.4.1
Reserved	1–127	—
Error	128–255	—

7.3.2 Information elements

Change Table 20 from element identifier (ID) 17 to the end of the table as follows:

Table 20—Element IDs

Information element	Element ID
Reserved	17–31
Power Constraint	32
Power Capability	33
TPC Request	34
TPC Report	35
Supported Channels	36
Channel Switch Announcement	37

Copyright © 2003 IEEE. All rights reserved.
Authorized licensed use limited to: MIT. Downloaded on June 28,2026 at 19:19:50 UTC from IEEE Xplore. Restrictions apply.
IPR2025-01307; Samsung
Ex. 1051 - Page 26

Table 20—Element IDs *(continued)*

Information element	Element ID
Measurement Request	38
Measurement Report	39
Quiet	40
IBSS DFS	41
ERP Information	42
Reserved	43–49
Extended Supported Rates	50
Reserved	51–255

Insert 7.3.2.15 through 7.4.1.5 after 7.3.2.14 and renumber figures and tables as appropriate:

7.3.2.15 Power Constraint element

The Power Constraint element contains the information necessary to allow a STA to determine the local maximum transmit power in the current channel. The format of the Power Constraint element is shown in Figure 46a.

	Element ID	Length	Local Power Constraint
Octets:	1	1	1

Figure 46a—Power Constraint element format

The Length field shall be set to 1.

The Local Power Constraint field shall be set to a value that allows the mitigation requirements to be satisfied in the current channel. The field is coded as an unsigned integer in units of decibels. The local maximum transmit power for a channel is thus defined as the maximum transmit power level specified for the channel in the Country element minus the local power constraint specified for the channel [from the management information base (MIB)] in the Power Constraint element.

The Power Constraint element is included in Beacon frames, as described in 7.2.3.1, and Probe Response frames, as described in 7.2.3.9. The use of Power Constraint elements is described in 11.5.2.

7.3.2.16 Power Capability element

The Power Capability element specifies the minimum and maximum transmit powers with which a STA is capable of transmitting in the current channel. The format of the Power Capability element is shown in Figure 46b.

The Length field shall be set to 2.

Copyright © 2003 IEEE. All rights reserved.

Authorized licensed use limited to: MIT. Downloaded on June 28,2026 at 19:19:50 UTC from IEEE Xplore. Restrictions apply.
IPR2025-01307; Samsung
Ex. 1051 - Page 27

	Element ID	Length	Minimum Transmit Power Capability	Maximum Transmit Power Capability
Octets:	1	1	1	1

Figure 46b—Power Capability element format

The Minimum Transmit Power Capability field shall be set to the nominal minimum transmit power with which the STA is capable of transmitting in the current channel, with a tolerance ± 5 dB. The field is coded as a signed integer in units of decibels relative to 1 mW.

The Maximum Transmit Power Capability field shall be set to the nominal maximum transmit power with which the STA is capable of transmitting in the current channel, with a tolerance ± 5 dB . The field is coded as a signed integer in units of decibels relative to 1 mW.

The Power Capability element is included in Association Request frames, as described in 7.2.3.4, and Reassociation Request frames, as described in 7.2.3.6. The use of Power Capability elements is described in 11.5.1.

7.3.2.17 TPC Request element

The TPC Request element contains a request for a STA to report transmit power and link margin information using a TPC Report element. The format of the TPC Request element is shown in Figure 46c.

	Element ID	Length
Octets:	1	1

Figure 46c—TPC Request element format

The Length field shall be set to 0.

The TPC Request element is included in TPC Request frames, as described in 7.4.1.3. The use of TPC Request elements and frames is described in 11.5.4.

7.3.2.18 TPC Report element

The TPC Report element contains transmit power and link margin information sent in response to a TPC Request element. A TPC Report element is included in a Beacon frame or Probe Response frame without a corresponding request. The format of the TPC Report element is shown in Figure 46d.

	Element ID	Length	Transmit Power	Link Margin
Octets:	1	1	1	1

Figure 46d—TPC Report element format

Copyright © 2003 IEEE. All rights reserved.
Authorized licensed use limited to: MIT. Downloaded on June 28,2026 at 19:19:50 UTC from IEEE Xplore. Restrictions apply.
IPR2025-01307; Samsung
Ex. 1051 - Page 28

The Length field shall be set to 2.

The Transmit Power field shall be set to the transmit power used to transmit the frame containing the TPC Report element. The field is coded as a signed integer in units of decibels relative to 1 mW. The maximum tolerance for the transmit power value reported in the TPC Response element shall be ± 5 dB. This tolerance is defined as the difference, in decibels, between the reported power value and the actual EIRP of the STA (measured when transmitting 1500 octet frames).

The Link Margin field contains the link margin at the time and for the rate at which the frame containing the TPC Request element was received. The field is coded as a signed integer in units of decibels. The Link Margin field shall be set to 0 and shall be ignored when a TPC Report element is included in a Beacon frame or Probe Response frame. The measurement method of Link Margin is beyond the scope of this amendment.

The TPC Report element is included in TPC Report frames, as described in 7.4.1.4; Beacon frames, as described in 7.2.3.1; and Probe Response frames, as described in 7.2.3.9. The use of TPC Report elements and frames is described in 11.5.4.

7.3.2.19 Supported Channels element

The Supported Channels element contains a list of channel subbands (from those channels defined in 17.3.8.3.3) in which a STA is capable of operating. The format of the Supported Channels element is shown in Figure 46e.

			One (first channel, number of channels) tuple for each subband	
	Element ID	Length	First Channel Number	Number of Channels
Octets:	1	1	1	1

Figure 46e—Supported Channels element format

The Length field is variable and depends on the number of subbands, defined by a First Channel Number–Number of Channels pair, that are included in the element.

The First Channel Number field shall be set to the first channel (as defined in 17.3.8.3.3) in a subband of supported channels.

The Number of Channels field shall be set to the number of channels in a subband of supported channels.

The Supported Channels element is included in Association Request frames, as described in 7.2.3.4, and Reassociation Request frames, as described in 7.2.3.6. The use of the Supported Channels element is described in 11.6.1 and 11.6.7.

7.3.2.20 Channel Switch Announcement element

The Channel Switch Announcement element is used by an AP in a BSS or a STA in an IBSS to advertise when it is changing to a new channel and the channel number of the new channel. The format of the Channel Switch Announcement element is shown in Figure 46f.

The Length field shall be set to 3.

Copyright © 2003 IEEE. All rights reserved.

Authorized licensed use limited to: MIT. Downloaded on June 28,2026 at 19:19:50 UTC from IEEE Xplore. Restrictions apply.
IPR2025-01307; Samsung
Ex. 1051 - Page 29

	Element ID	Length	Channel Switch Mode	New Channel Number	Channel Switch Count
Octets:	1	1	1	1	1

Figure 46f—Channel Switch Announcement element format

The Channel Switch Mode field indicates any restrictions on transmission until a channel switch. An AP in a BSS or a STA in an IBSS shall set the Channel Switch Mode field to either 0 or 1 on transmission. A Channel Switch Mode set to 1 means that the STA in a BSS to which the frame containing the element is addressed shall transmit no further frames within the BSS until the scheduled channel switch. A STA in an IBSS may treat a Channel Switch Mode field set to 1 as advisory. A Channel Switch Mode set to 0 does not impose any requirement on the receiving STA.

The New Channel Number field shall be set to the number of the channel to which the STA is moving (as defined in 17.3.8.3.3).

The Channel Switch Count field either shall be set to the number of target beacon transmission times (TBTTs) until the STA sending the Channel Switch Announcement element switches to the new channel or shall be set to 0. A value of 1 indicates that the switch will occur immediately before the next TBTT. A value of 0 indicates that the switch will occur at any time after the frame containing the element is transmitted.

The Channel Switch Announcement element is included in Channel Switch Announcement frames, as described in 7.4.1.5, and may be included in Beacon frames, as described in 7.2.3.1, and Probe Response frames, as described in 7.2.3.9. The use of Channel Switch Announcement elements and frames is described in 11.6.7.

7.3.2.21 Measurement Request element

The Measurement Request element contains a request that the receiving STA undertake the specified measurement action. The format of the Measurement Request element is shown in Figure 46g.

	Element ID	Length	Measurement Token	Measurement Request Mode (see Figure 46h)	Measurement Type	Measurement Request
Octets:	1	1	1	1	1	variable

Figure 46g—Measurement Request element format

	Reserved (0)	Enable	Request	Report	Reserved (0)
Bit:	0	1	2	3	4–7

Figure 46h—Measurement Request Mode field

Copyright © 2003 IEEE. All rights reserved.
Authorized licensed use limited to: MIT. Downloaded on June 28,2026 at 19:19:50 UTC from IEEE Xplore. Restrictions apply.
IPR2025-01307; Samsung
Ex. 1051 - Page 30

The Length field is variable and depends on the length of the Measurement Request field. The minimum value of the Length field is 3 (based on a minimum length for the Measurement Request field of 0 octets).

The Measurement Token shall be set to a nonzero number that is unique among the Measurement Request elements in a particular Measurement Request frame.

The Measurement Request Mode field (shown in Figure 46h) is a bit field with the following bits defined:

— Enable bit (bit 1) indicates whether this element is used to request the destination STA to enable or disable the sending of measurement requests and autonomous measurement reports of a specified type to this STA. The Enable bit shall be set to 1 when the Request bit and Report bit are valid. The Enable bit shall be set to 0 when the Request bit and Report bit are invalid.

— Request bit (bit 2) indicates whether the STA receiving the request shall enable or disable measurement requests of the type specified in the Measurement Type field. The Request bit shall be set to 1 when enabling a measurement request. The Request bit shall be set to 0 when disabling a measurement request or when the Request bit is invalid (i.e., when the Enable bit is set to 0 or when the Measurement Type field contains a reserved measurement request type value).

— Report bit (bit 3) indicates whether the STA receiving the request shall enable or disable autonomous measurement reports of the type corresponding to the measurement report specified in the Measurement Type field. The Report bit shall be set to 1 when enabling an autonomous measurement report. The Report bit shall be set to 0 when disabling an autonomous measurement report or when the Report bit is invalid (i.e., when the Enable bit is set to 0 or when the Measurement Type field contains a reserved measurement report type value).

— All other bits are reserved and shall be set to 0.

The use of the Enable, Request, and Report bits is also summarized in Table 20a. See 11.6.6 for the description of how a STA shall handle requests to enable or disable measurement requests and autonomous reports.

Table 20a—Summary of use of Enable, Request, and Report bits

Bits			Meaning of bits
Enable	**Request**	**Report**	
0	0	0	When Enable bit is set to 0, Request and Report bits are invalid and shall be set to 0.
0	0	1	Not allowed.
0	1	0	Not allowed.
0	1	1	Not allowed.
1	0	0	The transmitting STA is requesting that it be sent neither measurement requests nor autonomous measurement reports of the types indicated in the Measurement Type field.
1	1	0	The transmitting STA is indicating it will accept measurement requests and requesting it not be sent autonomous measurement reports of the types indicated in the Measurement Type field.
1	0	1	The transmitting STA is requesting it not be sent measurement requests and indicating it will accept autonomous measurement reports of the types indicated in the Measurement Type field.
1	1	1	The transmitting STA is indicating it will accept measurement requests and autonomous measurement reports of the type indicated in the Measurement Type field.

Copyright © 2003 IEEE. All rights reserved.

Authorized licensed use limited to: MIT. Downloaded on June 28,2026 at 19:19:50 UTC from IEEE Xplore. Restrictions apply.
IPR2025-01307; Samsung
Ex. 1051 - Page 31

The Measurement Type field shall be set to a number that identifies a measurement request or a measurement report. The Measurement Types that have been allocated for measurement requests are shown in Table 20b and measurement reports are shown in Table 20c (in 7.3.2.22).

Table 20b—Measurement Type definitions for measurement requests

Name	Measurement Type
Basic request	0
Clear channel assessment (CCA) request	1
Receive power indication (RPI) histogram request	2
Reserved	3–255

The Measurement Request field shall be null when the Enable bit is set to 1 and shall contain the specification of the measurement request, as described in 7.3.2.21.1 through 7.3.2.21.3, when the Enable bit is set to 0.

The Measurement Request element is included in a Measurement Request frame as described in 7.4.1.1. The use of Measurement Request elements and frames is described in 11.6.6.

7.3.2.21.1 Basic request

A Measurement Type in the Measurement Request element may indicate a basic request. The response to a basic request is a basic report. It is mandatory for a STA in a BSS to generate a basic report in response to a basic request if the request is received from the AP with which it is associated, except as specified in 11.6.6. The Measurement Request field corresponding to a basic request is shown in Figure 46i.

	Channel Number	Measurement Start Time	Measurement Duration
Octets:	1	8	2

Figure 46i—Measurement Request field format for a basic request

The Channel Number field shall be set to the channel number for which the measurement request applies (as defined in 17.3.8.3.3).

The Measurement Start Time field shall be set to the timing synchronization function (TSF) timer at the time (± 32μs) at which the requested basic request measurement shall start. A value of 0 shall indicate it shall start immediately.

The Measurement Duration field shall be set to the duration of the requested measurement, expressed in time units (TUs).

Copyright © 2003 IEEE. All rights reserved.
Authorized licensed use limited to: MIT. Downloaded on June 28,2026 at 19:19:50 UTC from IEEE Xplore. Restrictions apply.
IPR2025-01307; Samsung
Ex. 1051 - Page 32

7.3.2.21.2 CCA request

A Measurement Type in the Measurement Request element may indicate a CCA request. A response to a CCA request is a CCA report. It is optional for a STA to generate a CCA report in response to a CCA Request. The Measurement Request field corresponding to a CCA request is shown in Figure 46j.

	Channel Number	Measurement Start Time	Measurement Duration
Octets:	1	8	2

Figure 46j—Measurement Request field format for a CCA request

The Channel Number field shall be set to the channel number for which the measurement request applies (as defined in 17.3.8.3.3).

The Measurement Start Time field shall be set to the TSF at the time (± 32μs) at which the requested CCA request measurement shall start. A value of 0 shall indicate it shall start immediately.

The Measurement Duration field shall be set to the duration of the requested measurement, expressed in TUs.

7.3.2.21.3 RPI histogram request

A Measurement Type in the Measurement Request element may indicate an RPI histogram request. A response to an RPI histogram request is an RPI histogram report. It is optional for a STA to generate a RPI histogram report in response to a RPI histogram request. The Measurement Request field corresponding to an RPI histogram request is shown in Figure 46k.

	Channel Number	Measurement Start Time	Measurement Duration
Octets:	1	8	2

Figure 46k—Measurement Request field format for a RPI histogram request

The Channel Number field shall be set to the channel number for which the measurement request applies (as defined in 17.3.8.3.3).

The Measurement Start Time field shall be set to the TSF at the time (± 32μs) at which the requested RPI histogram request measurement shall start. A value of 0 shall indicate it shall start immediately.

The Measurement Duration field shall be set to the duration of the requested measurement, expressed in TUs.

7.3.2.22 Measurement Report element

The Measurement Report element contains a measurement report. The format of the Measurement Report element is shown in Figure 46l.

Copyright © 2003 IEEE. All rights reserved.

Authorized licensed use limited to: MIT. Downloaded on June 28,2026 at 19:19:50 UTC from IEEE Xplore. Restrictions apply.
IPR2025-01307; Samsung
Ex. 1051 - Page 33

	Element ID	Length	Measurement Token	Measurement Report Mode (see Figure 46m)	Measurement Type	Measurement Report
Octets:	1	1	1	1	1	variable

Figure 46l—Measurement Report element format

	Late	Incapable	Refused	Reserved
Bit:	0	1	2	3–7

Figure 46m—Measurement Report Mode field

The Length field is variable and depends on the length of the Measurement Report field. The minimum value of the Length field is 3.

The Measurement Token field shall be set to the Measurement Token in the corresponding Measurement Request element. If the Measurement Report element is being sent autonomously, then the Measurement Token shall be set to 0.

The Measurement Report Mode field (shown in Figure 46m) is a bit field with the following bits defined:

— Late bit (bit 0) indicates whether this STA is unable to carry out a measurement request because it received the request after the requested measurement time. The Late bit shall be set to 1 to indicate the request was too late. The Late bit shall be set to 0 to indicate the request was received in time for the measurement to be executed.

— Incapable bit (bit 1) indicates whether this STA is incapable of generating a report of the type specified in the Measurement Type field that was previously requested by the destination STA of this Measurement Report element. The Incapable bit shall be set to 1 to indicate the STA is incapable. The Incapable bit shall be set to 0 to indicate the STA is capable or the report is autonomous.

— Refused bit (bit 2) indicates whether this STA is refusing to generate a report of the type specified in the Measurement Type field that was previously requested by the destination STA of this Measurement Report element. The Refused bit shall be set to 1 to indicate the STA is refusing. The Refused bit shall be set to 0 to indicate the STA is not refusing or the report is autonomous.

— All other bits are reserved and shall be set to 0.

The Measurement Type field shall be set to a number that identifies the measurement report. The Measurement Types that have been allocated are shown in Table 20c.

The Measurement Report field shall be null when the Late bit is set to 1, the Incapable bit is set to 1, or the Refused bit is set to 1. Otherwise, it shall contain the specification of the measurement report, as described in 7.3.2.22.1 through 7.3.2.22.3.

The Measurement Report element is included in a Measurement Report frame as described in 7.4.1.2. The use of Measurement Report elements and frames is described in 11.6.6.

Copyright © 2003 IEEE. All rights reserved.
Authorized licensed use limited to: MIT. Downloaded on June 28,2026 at 19:19:50 UTC from IEEE Xplore. Restrictions apply.
IPR2025-01307; Samsung
Ex. 1051 - Page 34

Table 20c—Measurement Type definitions for measurement reports

Name	Measurement Type
Basic report	0
CCA report	1
RPI histogram report	2
Reserved	3–255

7.3.2.22.1 Basic report

A Measurement Type in the Measurement Report element may indicate a basic report. The format of the Measurement Report field corresponding to a basic report is shown in Figure 46n. It is mandatory for a STA to support the generation of this report.

	Channel Number	Measurement Start Time	Measurement Duration	Map (see Figure 46o)
Octets:	1	8	2	1

Figure 46n—Measurement Report field format for a basic report

	BSS	Orthogonal frequency division multiplexing (OFDM) Preamble	Unidentified Signal	Radar	Unmeasured	Reserved (0)
Bit:	0	1	2	3	4	5-7

Figure 46o—Map field format

The Channel Number field shall be set to the channel number to which the basic report applies (as defined in 17.3.8.3.3).

The Measurement Start Time field shall be set to the TSF at the time (± 32μs) at which the basic report measurement started.

The Measurement Duration field shall be set to the duration over which the basic report was measured, expressed in TUs.

The Map field is coded as a bit field, as shown in Figure 46o, and shall contain the following bits:

— BSS bit, which shall be set to 1 when at least one valid MAC protocol data unit (MPDU) was received in the channel during the measurement period from another BSS or IBSS. Otherwise, the BSS bit shall be set to 0.

— OFDM Preamble bit, which shall be set to 1 when at least one sequence of short training symbols, as defined in 17.3.3, was detected in the channel during the measurement period without a subsequent

Copyright © 2003 IEEE. All rights reserved.

Authorized licensed use limited to: MIT. Downloaded on June 28,2026 at 19:19:50 UTC from IEEE Xplore. Restrictions apply.
IPR2025-01307; Samsung
Ex. 1051 - Page 35

valid Signal field (see 17.3.4). This may indicate the presence of an OFDM preamble, such as high-performance RLAN/2 (HIPERLAN/2). Otherwise, the OFDM Preamble bit shall be set to 0.

— Unidentified Signal bit, which may be set to 1 when significant power is detected in the channel during the measurement period that cannot be characterized as radar, an OFDM preamble, or a valid MPDU. Otherwise, the Unidentified Signal bit shall be set to 0. The definition of significant power is implementation dependent.

— Radar bit, which shall be set to 1 when radar was detected operating in the channel during the measurement period. The algorithm to detect radar shall satisfy regulatory requirements and is outside the scope of this amendment. Otherwise, the Radar bit shall be set to 0.

— Unmeasured bit, which shall be set to 1 when this channel has not been measured. Otherwise, the Unmeasured bit shall be set to 0. When the Unmeasured field is set to 1, all the other bit fields shall be set to 0.

7.3.2.22.2 CCA report

A Measurement Type in the Measurement Report element may indicate a CCA report. It is optional for a STA to support the generation of this report. The format of the Measurement Report field corresponding to a CCA report is shown in Figure 46p.

	Channel Number	Measurement Start Time	Measurement Duration	CCA Busy Fraction
Octets:	1	8	2	1

Figure 46p—Measurement Report field format for a CCA report

The Channel Number field shall contain the channel number to which the CCA report applies (as defined in 17.3.8.3.3).

The Measurement Start Time field shall be set to the TSF at the time (± 32μs) at which the CCA report measurement started.

The Measurement Duration field shall be set to the duration over which the CCA report was measured, expressed in TUs.

The CCA Busy Fraction field shall contain the fractional duration over which CCA indicated the channel was busy during the measurement duration. The resolution of the CCA busy measurement is in microseconds. The CCA Busy Fraction value is defined as Ceiling (255 * [Duration CCA indicated channel was busy (microseconds)] / (1024 * [Measurement duration (TUs)])).

7.3.2.22.3 RPI histogram report

A Measurement Type in the Measurement Report element may indicate an RPI histogram report. It is optional for a STA to support the generation of this report. The format of the Measurement Report field corresponding to an RPI histogram report is shown in Figure 46q.

The Channel Number field shall be set to the channel number to which the RPI histogram report applies (as defined in 17.3.8.3.3).

The Measurement Start Time field shall be set to the TSF at the time (± 32μs) at which the RPI histogram report measurement started.

Copyright © 2003 IEEE. All rights reserved.
Authorized licensed use limited to: MIT. Downloaded on June 28,2026 at 19:19:50 UTC from IEEE Xplore. Restrictions apply.
IPR2025-01307; Samsung
Ex. 1051 - Page 36

	Channel Number	Measure-ment Start Time	Measure-ment Duration
Octets:	1	8	2

	RPI 0 density	RPI 1 density	RPI 2 density	RPI 3 density	RPI 4 density	RPI 5 density	RPI 6 density	RPI 7 density
Octets:	1	1	1	1	1	1	1	1

Figure 46q—Measurement Report field format for an RPI histogram report

The Measurement Duration field shall be set to the duration over which the RPI histogram report was measured, expressed in TUs.

The RPI histogram report shall contain the RPI densities observed in the channel for the eight RPI levels defined in Table 20d. To compute the RPI densities, the STA shall measure the received power level on the specified channel, as detected at the antenna connector, as a function of time over the measurement duration. The maximum tolerance of the received power measurements shall be ± 5 dB. Furthermore, the received signal power measurement should be a monotonic function of the actual power at the antenna. The time resolution of the received power measurements is in microseconds. The received power measurements are converted to a sequence of RPI values by quantizing the measurements according to Table 4. The RPI densities are then computed for each of the eight possible RPI values using Ceiling (255 * [Duration receiving at RPI value (microseconds) / (1024 * Measurement duration)]). The sum of the RPI densities will be approximately 255, but could be up to 262 because of rounding effects.

Table 20d—RPI definitions for an RPI histogram report

RPI	Power observed at the antenna (dBm)
0	Power ≤–87
1	–87 < Power ≤–82
2	–82 < Power ≤–77
3	–77 < Power ≤–72
4	–72 < Power ≤–67
5	–67 < Power ≤–62
6	–62 < Power ≤–57
7	–57 < Power

The RPI histogram report provides an additional mechanism for a STA to gather information on the state of a channel from other STAs. The STA may use this information to assist in the choice of new channel, to help avoid false radar detections, and to assess the general level of interference present on a channel.

Copyright © 2003 IEEE. All rights reserved.

Authorized licensed use limited to: MIT. Downloaded on June 28,2026 at 19:19:50 UTC from IEEE Xplore. Restrictions apply.
IPR2025-01307; Samsung
Ex. 1051 - Page 37

7.3.2.23 Quiet element

The Quiet element defines an interval during which no transmission shall occur in the current channel. This interval may be used to assist in making channel measurements without interference from other STAs in the BSS or IBSS. The format of the Quiet element is shown in Figure 46r.

	Element ID	Length	Quiet Count	Quiet Period	Quiet Duration	Quiet Offset
Octets:	1	1	1	1	2	2

Figure 46r—Quiet element format

The Length field shall be set to 6.

The Quiet Count field shall be set to the number of TBTTs until the beacon interval during which the next quiet interval shall start. A value of 1 indicates the quiet interval will start during the beacon interval starting at the next TBTT. A value of 0 is reserved.

The Quiet Period field shall be set to the number of beacon intervals between the start of regularly scheduled quiet intervals defined by this Quiet element. A value of 0 indicates that no periodic quiet interval is defined.

The Quiet Duration field shall be set to the duration of the quiet interval, expressed in TUs.

The Quiet Offset field shall be set to the offset of the start of the quiet interval from the TBTT specified by the Quiet Count field, expressed in TUs. The value of the Quiet Offset field shall be less than one beacon interval.

The Quiet element may be included in Beacon frames, as described in 7.2.3.1, and Probe Response frames, as described in 7.2.3.9. The use of Quiet elements is described in 11.6.2.

7.3.2.24 IBSS DFS element

The IBSS DFS element contains information for DFS operation in an IBSS. The format of the IBSS DFS element is shown in Figure 46s.

	Element ID	Length	DFS Owner	DFS Recovery Interval	Channel Map (see Figure 46t)
Octets:	1	1	6	1	2**n*

Figure 46s—IBSS DFS element format

	Channel Number	Map	*n* tuples, one for each supported channel
Octets:	1	1	

Figure 46t—Channel Map field format

Copyright © 2003 IEEE. All rights reserved.
Authorized licensed use limited to: MIT. Downloaded on June 28,2026 at 19:19:50 UTC from IEEE Xplore. Restrictions apply.
IPR2025-01307; Samsung
Ex. 1051 - Page 38

The Length field is variable.

The DFS Owner field shall be set to the individual IEEE MAC address of the STA that is the currently known DFS Owner in the IBSS.

The DFS Recovery Interval field indicates the time interval that shall be used for DFS owner recovery, expressed as an integral number of beacon intervals. The DFS Recovery Interval value is static throughout the lifetime of the IBSS and is determined by the STA that starts the IBSS.

The Channel Map field shown in Figure 46t shall contain a Channel Number field and a Map field (see 7.3.2.22.1) for each channel supported by the STA transmitting the IBSS DFS element. Note that *n* in Figure 46s is the number of channels supported by the STA.

The IBSS DFS element may be included in Beacon frames, as described in 7.2.3.1, and Probe Response frames, as described in 7.2.3.9. The use of IBSS DFS elements is described in 11.6.7.2.

7.4 Action frame format details

This subclause describes the Action frame formats, including the Action Details field, allowed in each of the action categories defined in Table 19a in 7.3.1.11.

7.4.1 Spectrum management action details

Five Action frame formats are defined for spectrum management. An Action field, in the octet field immediately after the Category field, differentiates the five formats. The Action field values associated with each frame format are defined in Table 20e.

Table 20e—Spectrum management Action field values

Action field value	Description
0	Measurement Request
1	Measurement Report
2	TPC Request
3	TPC Report
4	Channel Switch Announcement
5–255	Reserved

7.4.1.1 Measurement Request frame format

The Measurement Request frame uses the Action frame body format and is transmitted by a STA requesting another STA to measure one or more channels. The format of the Measurement Request frame body is shown in Figure 46u.

The Category field shall be set to 0 (representing spectrum management).

The Action field shall be set to 0 (representing a Measurement Request frame).

Copyright © 2003 IEEE. All rights reserved.

Authorized licensed use limited to: MIT. Downloaded on June 28,2026 at 19:19:50 UTC from IEEE Xplore. Restrictions apply.
IPR2025-01307; Samsung
Ex. 1051 - Page 39

	Category	Action	Dialog Token	Measurement Request Elements
Octets:	1	1	1	variable

Figure 46u—Measurement Request frame body format

The Dialog Token field shall be set to a nonzero value chosen by the STA sending the measurement request to identify the request/report transaction.

The Measurement Request Elements field shall contain one or more of the Measurement Request elements described in 7.3.2.21. The number and length of the Measurement Request elements in a Measurement Request frame is limited by the maximum allowed MAC management PDU (MMPDU) size.

7.4.1.2 Measurement Report frame format

The Measurement Report frame uses the Action frame body format and is transmitted by a STA in response to a Measurement Request frame or by a STA autonomously providing measurement information. The format of the Measurement Report frame body is shown in Figure 46v.

	Category	Action	Dialog Token	Measurement Report Elements
Octets:	1	1	1	variable

Figure 46v—Measurement Report frame body format

The Category field shall be set to 0 (representing spectrum management).

The Action field shall be set to 1 (representing a Measurement Report frame).

The Dialog Token field shall be set to the value in any corresponding Measurement Request frame. If the Measurement Report frame is not being transmitted in response to a Measurement Request frame, then the Dialog token shall be set to 0.

The Measurement Report Elements field shall contain one or more of the Measurement Report elements described in 7.3.2.22. The number and length of the Measurement Report elements in a Measurement Report frame is limited by the maximum allowed MMPDU size.

7.4.1.3 TPC Request frame format

The TPC Request frame uses the Action frame body format and is transmitted by a STA requesting another STA for transmit power and link margin information. The format of the TPC Request frame body is shown in Figure 46w.

The Category field shall be set to 0 (representing spectrum management).

The Action field shall be set to 2 (representing a TPC Request frame).

Copyright © 2003 IEEE. All rights reserved.
Authorized licensed use limited to: MIT. Downloaded on June 28,2026 at 19:19:50 UTC from IEEE Xplore. Restrictions apply.
IPR2025-01307; Samsung
Ex. 1051 - Page 40

	Category	Action	Dialog Token	TPC Request element
Octets:	1	1	1	2

Figure 46w—TPC Request frame body format

The Dialog Token field shall be set to a nonzero value chosen by the STA sending the request to identify the transaction.

The TPC Request element shall be set as described in 7.3.2.17.

7.4.1.4 TPC Report frame format

The TPC Report frame uses the Action frame body format and is transmitted by a STA in response to a TPC Request frame. The format of the TPC Report frame body is shown in Figure 46x.

	Category	Action	Dialog Token	TPC Report element
Octets:	1	1	1	4

Figure 46x—TPC Report frame body format

The Category field shall be set to 0 (representing spectrum management).

The Action field shall be set to 3 (representing a TPC Report frame).

The Dialog Token field shall be set to the Dialog Token value in the corresponding TPC Request frame.

The TPC Report element shall be set as described 7.3.2.18.

7.4.1.5 Channel Switch Announcement frame format

The Channel Switch Announcement frame uses the Action frame body format and is transmitted by an AP in a BSS or a STA in an IBSS to advertise a channel switch. The format of the Channel Switch Announcement frame body is shown in Figure 46y.

	Category	Action	Channel Switch Announcement element
Octets:	1	1	5

Figure 46y—Channel Switch Announcement frame body format

The Category field shall be set to 0 (representing spectrum management).

The Action field shall be set to 4 (representing a Channel Switch Announcement frame).

Copyright © 2003 IEEE. All rights reserved.

Authorized licensed use limited to: MIT. Downloaded on June 28,2026 at 19:19:50 UTC from IEEE Xplore. Restrictions apply.

IPR2025-01307; Samsung
Ex. 1051 - Page 41

The Channel Switch Announcement element shall be set as described 7.3.2.20.

9. MAC sublayer functional description

9.2 Distributed coordination function (DCF)

9.2.3 Interframe space (IFS)

9.2.3.2 Point coordination function (PCF) IFS (PIFS)

Change the first paragraph of 9.2.3.2 as follows:

The PIFS shall be used only by STAs operating under the PCF to gain priority access to the medium at the start of the contention-free period (CFP) or by a STA to transmit a Channel Switch Announcement frame. A STA using the PCF shall be allowed to transmit CF traffic after its carrier sense (CS) mechanism (see 9.2.1) determines that the medium is idle at the TxPIFS slot boundary as defined in 9.2.10. A STA may also transmit a Channel Switch Announcement frame after its CS mechanism (see 9.2.1) determines that the medium is idle at the TxPIFS slot boundary. The use of the PIFS by STAs operating under the PCF is described in 9.3. The use of PIFS by STAs transmitting a Channel Switch Announcement frame is described in 11.6.7.1.

10. Layer management

10.3 MAC sublayer management entity (MLME) service access point (SAP) interface

10.3.2 Scan

10.3.2.2 MLME-SCAN.confirm

10.3.2.2.2 Semantics of the service primitive

Insert the following elements at the end of the untitled table listing the elements of BSSDescription in 10.3.2.2.2:

Name	Type	Valid range	Description
Country	As defined in the Country element	As defined in the Country element	The information required to identify the regulatory domain in which the STA is located and to configure its physical layer (PHY) for operation in that regulatory domain. Present only when TPC functionality is required, as specified in 11.5, or when dot11MultiDomainCapabilityEnabled is true.
IBSS DFS Recovery Interval	Integer	1–255	Only present if BSSType = INDEPENDENT. The time interval that shall be used for DFS recovery. Present only when DFS functionality is required, as specified in 11.6.

Copyright © 2003 IEEE. All rights reserved.
Authorized licensed use limited to: MIT. Downloaded on June 28,2026 at 19:19:50 UTC from IEEE Xplore. Restrictions apply.
IPR2025-01307; Samsung
Ex. 1051 - Page 42

10.3.6 Associate

10.3.6.1 MLME-ASSOCIATE.request

10.3.6.1.2 Semantics of the service primitive

Change the following primitive parameter list in 10.3.6.1.2:

MLME-ASSOCIATE.request(
PeerSTAAddress,
AssociateFailureTimeout,
CapabilityInformation,
ListenInterval,
Supported Channels
)

Insert the following row at the end of the untitled table defining the primitive parameters in 10.3.6.1.2:

Name	Type	Valid range	Description
Supported Channels	As defined in the Supported Channels element	As defined in the Supported Channels element	The list of channels in which the STA is capable of operating. Present only when DFS functionality is required, as specified in 11.6.

10.3.7 Reassociate

10.3.7.1 MLME-REASSOCIATE.request

10.3.7.1.2 Semantics of the service primitive

Change the following primitive parameter list in 10.3.7.1.2:

MLME-REASSOCIATE.request(
NewAPAddress,
ReassociateFailureTimeout,
CapabilityInformation,
ListenInterval,
Supported Channels
)

Insert the following row at the end of the untitled table defining the primitive parameters in 10.3.7.1.2:

Name	Type	Valid range	Description
Supported Channels	As defined in the Supported Channels element	As defined in the Supported Channels element	The list of channels in which the STA is capable of operating. Present only when DFS functionality is required, as specified in 11.6.

Copyright © 2003 IEEE. All rights reserved.

Authorized licensed use limited to: MIT. Downloaded on June 28,2026 at 19:19:50 UTC from IEEE Xplore. Restrictions apply.

10.3.10 Start

10.3.10.1 MLME-START.request

10.3.10.1.2 Semantics of the service primitive

Change the following primitive parameter list in 10.3.10.1.2:

MLME-START.request(
SSID,
BSSType,
BeaconPeriod,
DTIMPeriod,
CF parameter set,
PHY parameter set,
IBSS parameter set,
ProbeDelay,
CapabilityInformation,
BSSBasicRateSet,
OperationalRateSet,
<u>Country,</u>
<u>IBSS DFS Recovery Interval</u>
)

Insert the following rows at the end of the untitled table defining the primitive parameters in 10.3.10.1.2:

Name	Type	Valid range	Description
Country	As defined in the Country element	As defined in the Country element	The information required to identify the regulatory domain in which the STA is located and to configure its PHY for operation in that regulatory domain. Present only when TPC functionality is required, as specified in 11.5, or when dot11MultiDomainCapabilityEnabled is true.
IBSS DFS Recovery Interval	Integer	1–255	Present only if BSSType = INDEPENDENT. The time interval that shall be used for DFS recovery. Present only when DFS functionality is required, as specified in 11.6.

Copyright © 2003 IEEE. All rights reserved.
Authorized licensed use limited to: MIT. Downloaded on June 28,2026 at 19:19:50 UTC from IEEE Xplore. Restrictions apply.
IPR2025-01307; Samsung
Ex. 1051 - Page 44

Insert 10.3.11 through 10.3.16.2.4 after 10.3.10.2.4 as follows:

10.3.11 Spectrum management protocol layer model

The layer management extensions for measurement and channel switching assume a certain partition of spectrum management functionality between the MLME and station management entity (SME). This partitioning assumes that policy decisions (e.g., regarding measurement and channel switching) reside in the SME, while the protocol for measurement, switch timing, and the associated frame exchanges resides within the MLME (see Figure 67a).

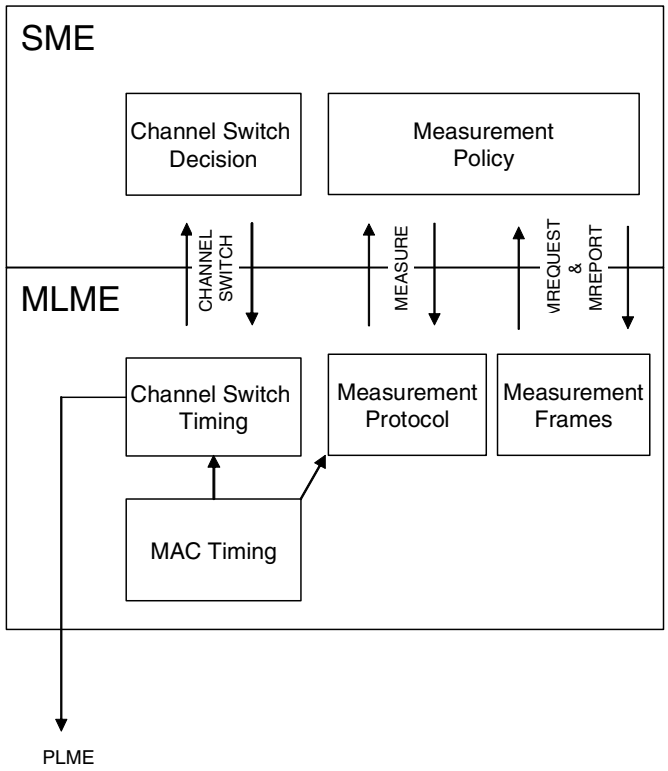

Figure 67a—Layer management model

Copyright © 2003 IEEE. All rights reserved.

Authorized licensed use limited to: MIT. Downloaded on June 28,2026 at 19:19:50 UTC from IEEE Xplore. Restrictions apply.

The informative diagrams within this subclause further illustrate the spectrum management protocol model adopted. Figure 67b and Figure 67c depict the measurement process for a peer STA to accept and reject a measurement request, respectively. Figure 67d illustrates the TPC adaptation process. Lastly, Figure 67e depicts the management process for a channel switch using a Channel Switch Announcement frame.

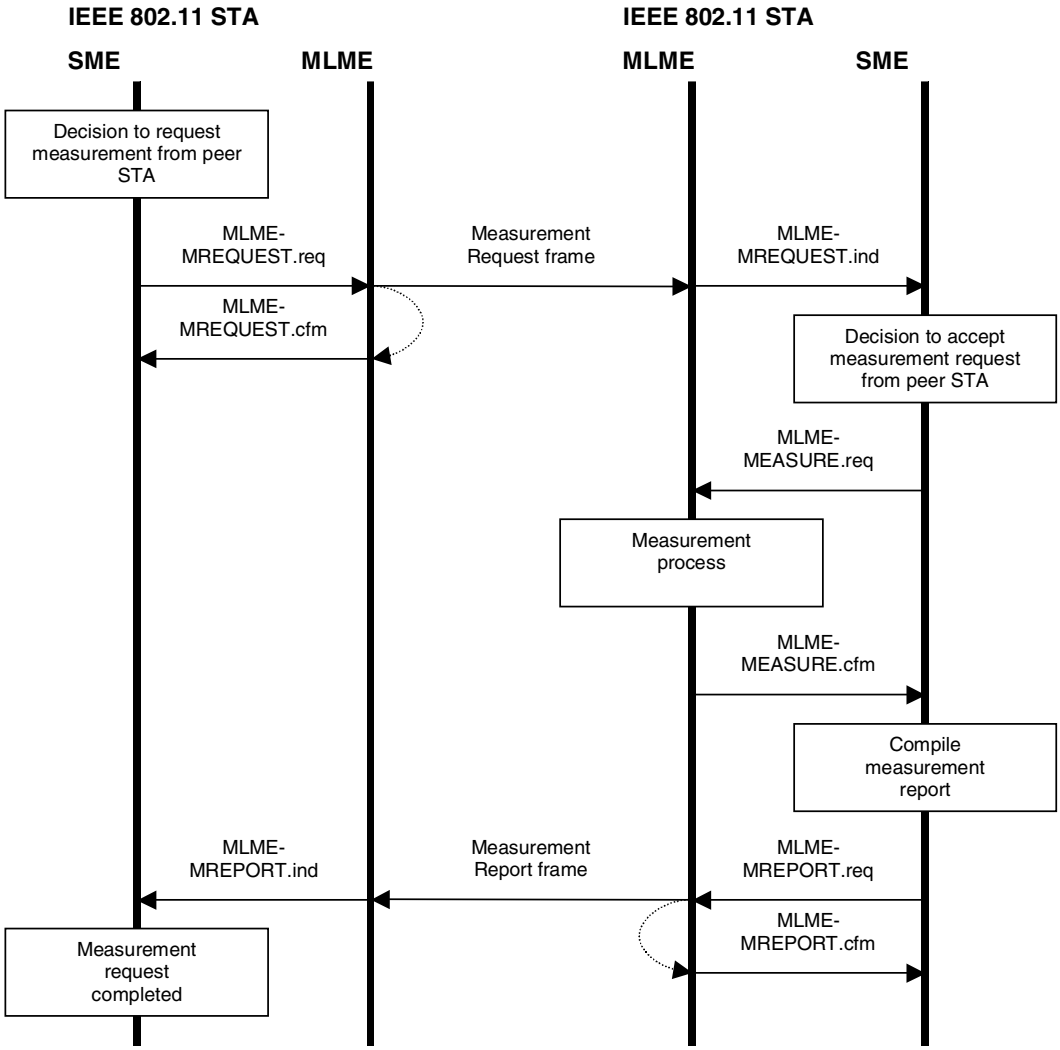

Figure 67b—Measurement request—accepted

Copyright © 2003 IEEE. All rights reserved.
Authorized licensed use limited to: MIT. Downloaded on June 28,2026 at 19:19:50 UTC from IEEE Xplore. Restrictions apply.
IPR2025-01307; Samsung
Ex. 1051 - Page 46

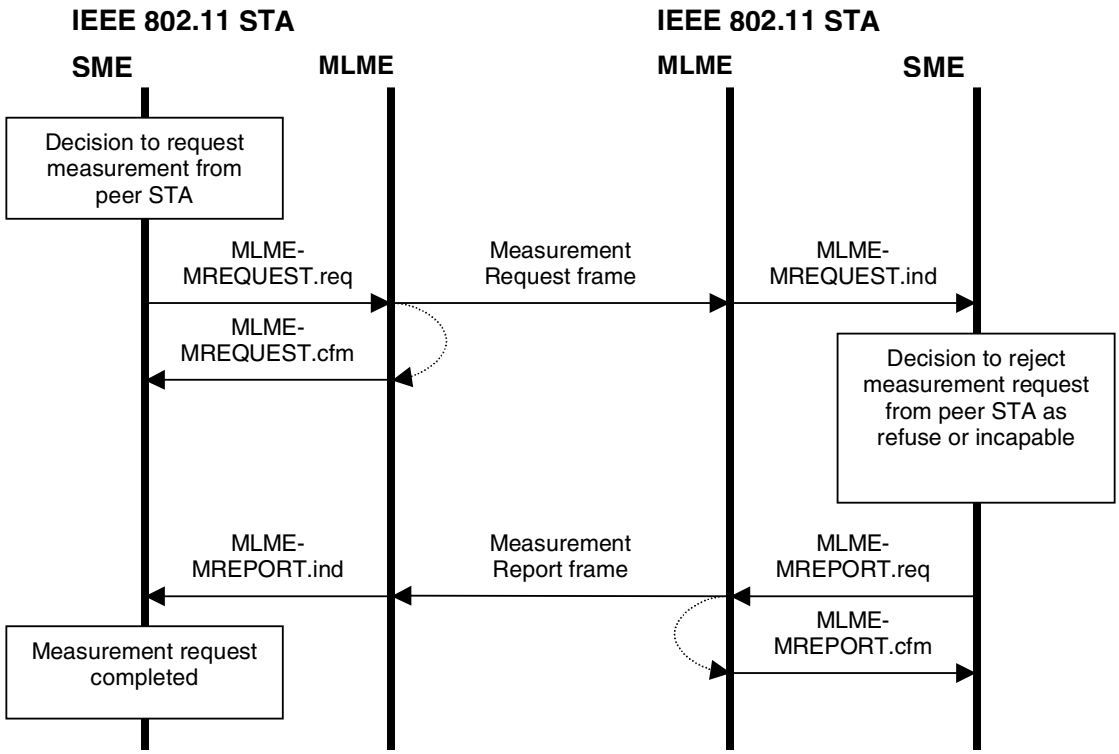

Figure 67c—Measurement request - rejected

Copyright © 2003 IEEE. All rights reserved.

Authorized licensed use limited to: MIT. Downloaded on June 28,2026 at 19:19:50 UTC from IEEE Xplore. Restrictions apply.

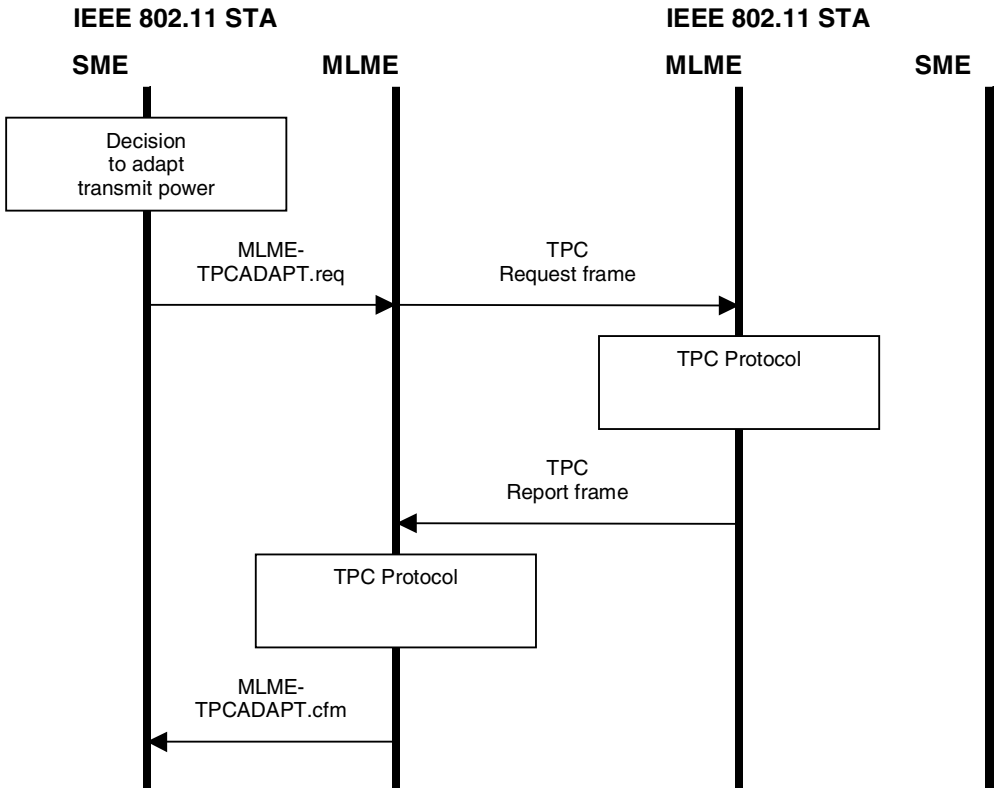

Figure 67d—TPC adaptation

Copyright © 2003 IEEE. All rights reserved.
Authorized licensed use limited to: MIT. Downloaded on June 28,2026 at 19:19:50 UTC from IEEE Xplore. Restrictions apply.
IPR2025-01307; Samsung
Ex. 1051 - Page 48

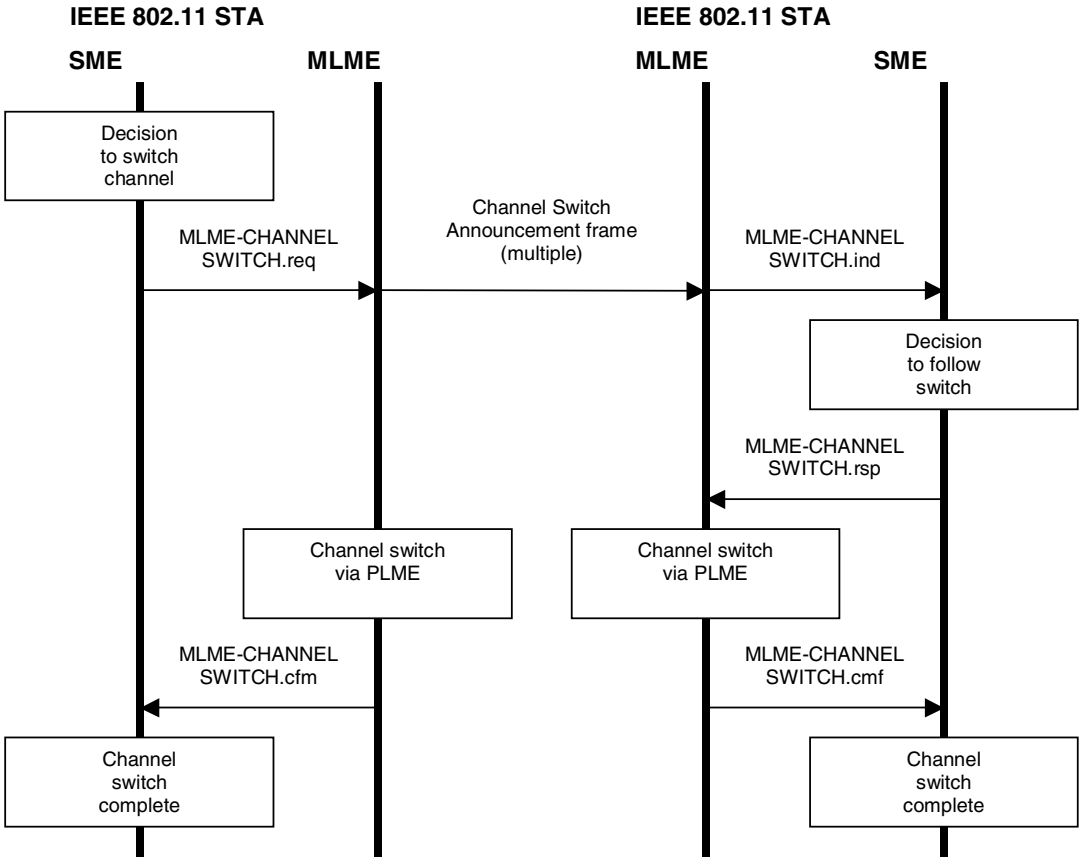

Figure 67e—Channel switch

10.3.12 Measurement request

This set of primitives supports the signaling of measurement requests between peer SMEs.

10.3.12.1 MLME-MREQUEST.request

10.3.12.1.1 Function

This primitive requests the transmission of a measurement request to a peer entity.

10.3.12.1.2 Semantics of the service primitive

The primitive parameters are as follows:

```
MLME-MREQUEST.request(
                        Peer MAC Address,
                        Dialog Token,
                        Measurement Request Set
                        )
```

Copyright © 2003 IEEE. All rights reserved.

Authorized licensed use limited to: MIT. Downloaded on June 28,2026 at 19:19:50 UTC from IEEE Xplore. Restrictions apply.

Name	Type	Valid range	Description
Peer MAC Address	MACAddress	Any valid individual or group MAC Address	The address of the peer MAC entity to which the measurement request shall be set.
Dialog Token	Integer	0–255	The dialog token to identify the measurement transaction.
Measurement Request Set	Set of measurement requests, each as defined in the Measurement Request element	Set of measurement requests, each as defined in the Measurement Request element	A set of measurement requests, each containing a Measurement Token, Measurement Request Mode, Measurement Type, and a Measurement Request.

10.3.12.1.3 When generated

This primitive is generated by the SME to request that a Measurement Request frame be sent to a peer entity to initiate one or more measurements.

10.3.12.1.4 Effect of receipt

On receipt of this primitive, the MLME shall construct a Measurement Request frame containing the set of Measurement Request elements specified. This frame shall then be scheduled for transmission.

10.3.12.2 MLME-MREQUEST.confirm

10.3.12.2.1 Function

This primitive reports the result of a request to send a Measurement Request frame.

10.3.12.2.2 Semantics of the service primitive

The primitive parameters are as follows:

```
MLME-MREQUEST.confirm(
                        ResultCode
                        )
```

Name	Type	Valid range	Description
ResultCode	Enumeration	SUCCESS, INVALID PARAMETERS, or UNSPECIFIED FAILURE	Reports the outcome of a request to send a Measurement Request frame.

10.3.12.2.3 When generated

This primitive is generated by the MLME when the request to transmit a Measurement Request frame completes.

Copyright © 2003 IEEE. All rights reserved.
Authorized licensed use limited to: MIT. Downloaded on June 28,2026 at 19:19:50 UTC from IEEE Xplore. Restrictions apply.
IPR2025-01307; Samsung
Ex. 1051 - Page 50

10.3.12.2.4 Effect of receipt

On receipt of this primitive, the SME shall evaluate the result code.

10.3.12.3 MLME-MREQUEST.indication

10.3.12.3.1 Function

This primitive indicates that a Measurement Request frame has been received requesting the measurement of one or more channels.

10.3.12.3.2 Semantics of the service primitive

The primitive parameters are as follows:

```
MLME-MREQUEST.indication(
                                    Peer MAC Address,
                                    Dialog Token,
                                    Measurement Request Set
                                    )
```

Name	Type	Valid range	Description
Peer MAC Address	MACAddress	Any valid individual Address	The address of the peer MAC entity from which the measurement request was received.
Dialog Token	Integer	0–255	The dialog token to identify the measurement transaction.
Measurement Request Set	Set of measurement requests, each as defined in the Measurement Request element	Set of measurement requests, each as defined in the Measurement Request element	A set of measurement requests, each containing a Measurement Token, Measurement Request Mode, Measurement Type, and a Measurement Request.

10.3.12.3.3 When generated

This primitive is generated by the MLME when a valid Measurement Request frame is received.

10.3.12.3.4 Effect of receipt

On receipt of this primitive, the SME shall either reject the request or commence the requested measurements.

10.3.13 Channel measurement

This set of primitives supports the requesting and reporting of measurement data.

Copyright © 2003 IEEE. All rights reserved.

Authorized licensed use limited to: MIT. Downloaded on June 28,2026 at 19:19:50 UTC from IEEE Xplore. Restrictions apply.

10.3.13.1 MLME-MEASURE.request

10.3.13.1.1 Function

This primitive is generated by the SME to request that the MLME initiate specified measurements.

10.3.13.1.2 Semantics of the service primitive

The primitive parameters are as follows:

```
MLME-MEASURE.request(
                    Dialog Token,
                    Measurement Request Set
                    )
```

Name	Type	Valid range	Description
Dialog Token	Integer	0–255	The Dialog Token to identify the measurement transaction.
Measurement Request Set	Set of measurement requests, each as defined in the Measurement Request element	Set of measurement requests, each as defined in the Measurement Request element	A set of measurement requests, each containing a Measurement Token, Measurement Request Mode, Measurement Type, and a Measurement Request.

10.3.13.1.3 When generated

This primitive is generated by the SME to request that the MLME initiate the specified measurements.

10.3.13.1.4 Effect of receipt

On receipt of this primitive, the MLME shall commence the measurement process.

10.3.13.2 MLME-MEASURE.confirm

10.3.13.2.1 Function

This primitive reports the result of a measurement.

10.3.13.2.2 Semantics of the service primitive

The primitive parameters are as follows:

```
MLME-MEASURE.confirm(
                    ResultCode,
                    Dialog Token,
                    Measurement Report Set
                    )
```


Copyright © 2003 IEEE. All rights reserved.
Authorized licensed use limited to: MIT. Downloaded on June 28,2026 at 19:19:50 UTC from IEEE Xplore. Restrictions apply.
IPR2025-01307; Samsung
Ex. 1051 - Page 52

Name	Type	Valid range	Description
ResultCode	Enumeration	SUCCESS, INVALID PARAMETERS, or UNSPECIFIED FAILURE	The outcome of the measurement request.
Dialog Token	Integer	0–255	The dialog token to identify the measurement transaction.
Measurement Report Set	Set of measurement reports, each as defined in the Measurement Report element	Set of measurement reports, each as defined in the Measurement Report element	A set of measurement reports, each containing a Measurement Token, Measurement Report Mode, Measurement Type, and a Measurement Report.

10.3.13.2.3 When generated

This primitive is generated by the MLME to report the results when a measurement set completes.

10.3.13.2.4 Effect of receipt

On receipt of this primitive, the SME shall evaluate the result code and, if appropriate, shall store the channel measurements pending communication to the requesting entity or for local use.

10.3.14 Measurement report

This set of primitives supports the signaling of measurement reports.

10.3.14.1 MLME-MREPORT.request

10.3.14.1.1 Function

This primitive supports the signaling of measurement reports between peer SMEs.

10.3.14.1.2 Semantics of the service primitive

The primitive parameters are as follows:

```
MLME-MREPORT.request(
                        Peer MAC Address,
                        Dialog Token,
                        Measurement Report Set
                        )
```

Copyright © 2003 IEEE. All rights reserved.

Authorized licensed use limited to: MIT. Downloaded on June 28,2026 at 19:19:50 UTC from IEEE Xplore. Restrictions apply.
IPR2025-01307; Samsung
Ex. 1051 - Page 53

Name	Type	Valid range	Description
Peer MAC Address	MACAddress	Any valid individual MAC Address	The address of the peer MAC entity to which the measurement report shall be set.
Dialog Token	Integer	0–255	The dialog token to identify the measurement transaction. Set to 0 for an autonomous report.
Measurement Report Set	Set of measurement reports, each as defined in the Measurement Report element	Set of measurement reports, each as defined in the Measurement Report element	A set of measurement reports, each containing a Measurement Token, Measurement Report Mode, Measurement Type, and a Measurement Report.

10.3.14.1.3 When generated

This primitive is generated by the SME to request that a frame be sent to a peer entity to report the results of measuring one or more channels.

10.3.14.1.4 Effect of receipt

On receipt of this primitive, the MLME shall construct a Measurement Report frame containing the set of measurement reports. This frame shall then be scheduled for transmission.

10.3.14.2 MLME-MREPORT.confirm

10.3.14.2.1 Function

This primitive reports the result of a request to send a Measurement Report frame.

10.3.14.2.2 Semantics of the service primitive

The primitive parameters are as follows:

```
MLME-MREPORT.confirm(
                                        ResultCode
                                        )
```

Name	Type	Valid range	Description
ResultCode	Enumeration	SUCCESS, INVALID PARAMETERS, or UNSPECIFIED FAILURE	Reports the outcome of a request to send a Measurement Request frame.

10.3.14.2.3 When generated

This primitive is generated by the MLME when the request to transmit a Measurement Report frame completes.

Copyright © 2003 IEEE. All rights reserved.
Authorized licensed use limited to: MIT. Downloaded on June 28,2026 at 19:19:50 UTC from IEEE Xplore. Restrictions apply.
IPR2025-01307; Samsung
Ex. 1051 - Page 54

10.3.14.2.4 Effect of receipt

On receipt of this primitive, the SME shall evaluate the result code.

10.3.14.3 MLME-MREPORT.indication

10.3.14.3.1 Function

This primitive indicates that a Measurement Report frame has been received from a peer entity. This management report may be in response to an earlier measurement request (e.g., MLME-MREQUEST.request) or may be an autonomous report.

10.3.14.3.2 Semantics of the service primitive

The primitive parameters are as follows:

```
MLME-MREPORT.indication(
                        Peer MAC Address,
                        Dialog Token,
                        Measurement Report Set
                        )
```

Name	Type	Valid range	Description
Peer MAC Address	MACAddress	Any valid individual MAC Address	The address of the peer MAC entity from which the Measurement Report frame was received.
Dialog Token	Integer	0–255	The dialog token to identify the measurement transaction. Set to 0 for an autonomous report.
Measurement Report Set	Set of measurement reports, each as defined in the Measurement Report element	Set of measurement reports, each as defined in the Measurement Report element	A set of measurement reports, each containing a Measurement Token, Measurement Report Mode, Measurement Type, and a Measurement Report.

10.3.14.3.3 When generated

This primitive is generated by the MLME when a valid Measurement Report frame is received.

10.3.14.3.4 Effect of receipt

On receipt of this primitive, measurement data may be available for SME processes, such as channel selection.

10.3.15 Channel switch

10.3.15.1 MLME-CHANNELSWITCH.request

10.3.15.1.1 Function

This primitive requests a switch to a new operating channel.

Copyright © 2003 IEEE. All rights reserved.

Authorized licensed use limited to: MIT. Downloaded on June 28,2026 at 19:19:50 UTC from IEEE Xplore. Restrictions apply.

10.3.15.1.2 Semantics of the service primitive

The primitive parameters are as follows:

MLME-CHANNELSWITCH.request(
Mode,
Channel Number,
Channel Switch Count
)

Name	Type	Valid range	Description
Mode	Integer	0, 1	Channel switch mode, as defined for the Channel Switch Announcement element.
Channel Number	Integer	As defined in 17.3.8.3.3	Specifies the new channel number.
Channel Switch Count	Integer	0–255	Specifies the number of TBTTs until the channel switch event, as described for the Channel Switch Announcement element.

10.3.15.1.3 When generated

This primitive is generated by the SME to schedule a channel switch and announce this switch to peer entities in the BSS.

10.3.15.1.4 Effect of receipt

On receipt of this primitive, the MLME shall schedule the channel switch event and announce this switch to other STAs in the BSS using the Channel Switch Announcement frame or element. The MLME shall ensure the timing of frame transmission takes into account the activation delay. The actual channel switch may be achieved at the appropriate time through the MLME-PLME interface using the PLME-SET primitive of the dot11CurrentFrequency MIB attribute.

10.3.15.2 MLME-CHANNELSWITCH.confirm

10.3.15.2.1 Function

This primitive reports the result of a request to switch channel.

10.3.15.2.2 Semantics of the service primitive

The primitive parameters are as follows:

MLME-CHANNELSWITCH.confirm(
ResultCode
)

Copyright © 2003 IEEE. All rights reserved.
Authorized licensed use limited to: MIT. Downloaded on June 28,2026 at 19:19:50 UTC from IEEE Xplore. Restrictions apply.
IPR2025-01307; Samsung
Ex. 1051 - Page 56

Name	Type	Valid range	Description
ResultCode	Enumeration	SUCCESS, INVALID PARAMETERS, or UNSPECIFIED FAILURE	Reports the result of a channel switch request.

10.3.15.2.3 When generated

This primitive is generated by the MLME when a channel switch request completes. Possible unspecified failure causes include an inability to schedule a channel switch announcement.

10.3.15.2.4 Effect of receipt

The SME is notified of the results of the channel switch procedure.

10.3.15.3 MLME-CHANNELSWITCH.indication

10.3.15.3.1 Function

This primitive indicates that a channel switch announcement has been received from a peer entity.

10.3.15.3.2 Semantics of the service primitive

The primitive parameters are as follows:

```
MLME-CHANNELSWITCH.indication(
                                    Peer MAC Address,
                                    Mode,
                                    Channel Number,
                                    Channel Switch Count
                                    )
```

Name	Type	Valid range	Description
Peer MAC Address	MACAddress	Any valid individual MAC Address	The address of the peer MAC entity from which the Measurement Report frame was received.
Mode	Integer	0, 1	Channel switch mode, as defined for the Channel Switch Announcement element.
Channel Number	Integer	As defined in 17.3.8.3.3	Specifies the new channel number.
Channel Switch Count	Integer	0–255	Specifies the number of TBTTs until the channel switch event, as described for the Channel Switch Announcement element.

Copyright © 2003 IEEE. All rights reserved.

Authorized licensed use limited to: MIT. Downloaded on June 28,2026 at 19:19:50 UTC from IEEE Xplore. Restrictions apply.
IPR2025-01307; Samsung
Ex. 1051 - Page 57

10.3.15.3.3 When generated

This primitive is generated by the MLME when a valid Channel Switch Announcement frame is received.

10.3.15.3.4 Effect of receipt

On receipt of this primitive, the SME shall decide whether to accept the switch.

10.3.15.4 MLME-CHANNELSWITCH.response

10.3.15.4.1 Function

This primitive is used to schedule an accepted channel switch.

10.3.15.4.2 Semantics of the service primitive

The primitive parameters are as follows:

```
MLME-CHANNELSWITCH.response(
                                    Mode,
                                    Channel Number,
                                    Channel Switch Count
                                    )
```

Name	Type	Valid range	Description
Mode	Integer	0, 1	Channel switch mode, as defined for the Channel Switch Announcement element.
Channel Number	Integer	As defined in 17.3.8.3.3	Specifies the new channel number.
Channel Switch Count	Integer	0–255	Specifies the number of TBTTs until the channel switch event. as described for the Channel Switch Announcement element.

10.3.15.4.3 When generated

This primitive is generated by the SME to schedule an accepted channel switch request.

10.3.15.4.4 Effect of receipt

On receipt of this primitive, the MLME shall schedule the channel switch. The actual channel switch may be achieved at the appropriate time through the MLME-PLME interface using the PLME-SET primitive of the dot11CurrentFrequncy MIB attribute.

10.3.16 TPC request

This set of primitives supports the adaptation of transmit power between peer entities as described in 11.5.4.

Copyright © 2003 IEEE. All rights reserved.
Authorized licensed use limited to: MIT. Downloaded on June 28,2026 at 19:19:50 UTC from IEEE Xplore. Restrictions apply.
IPR2025-01307; Samsung
Ex. 1051 - Page 58

10.3.16.1 MLME-TPCADAPT.request

10.3.16.1.1 Function

This primitive supports the adaptation of transmit power between peer entities as specified in 11.5.4.

10.3.16.1.2 Semantics of the service primitive

The primitive parameters are as follows:

```
MLME-TPCADAPT.request(
                        Peer MAC Address,
                        Dialog Token
                        )
```

Name	Type	Valid range	Description
Peer MAC Address	MACAddress	Any valid individual or group MAC Address	The address of the peer MAC entity to which the TPC request shall be set.
Dialog Token	Integer	0–255	The dialog token to identify the TPC transaction.

10.3.16.1.3 When generated

This primitive is generated by the SME to request that a TPC Request frame be sent to a peer entity to request that entity to report transmit power and link margin information.

10.3.16.1.4 Effect of receipt

On receipt of this primitive, the MLME shall construct a TPC Request frame. This frame shall then be scheduled for transmission.

10.3.16.2 MLME-TPCADAPT.confirm

10.3.16.2.1 Function

This primitive reports the result of the TPC adaptation procedure.

10.3.16.2.2 Semantics of the service primitive

The primitive parameters are as follows:

```
MLME-TPCADAPT.confirm(
                        ResultCode
                        )
```

Copyright © 2003 IEEE. All rights reserved.

Authorized licensed use limited to: MIT. Downloaded on June 28,2026 at 19:19:50 UTC from IEEE Xplore. Restrictions apply.
IPR2025-01307; Samsung
Ex. 1051 - Page 59

Name	Type	Valid range	Description
ResultCode	Enumeration	SUCCESS, INVALID PARAMETERS, or UNSPECIFIED FAILURE	Reports the outcome of a request to send a TPC Request frame.

10.3.16.2.3 When generated

This primitive is generated by the MLME when the TPC adaptation procedure completes.

10.3.16.2.4 Effect of receipt

The SME is notified of the results of the TCP adaptation procedure.

11. MLME

Insert 11.5 through 11.6.7.2 after 11.4 as follows and renumber figures and tables, as appropriate:

11.5 TPC procedures

ERC/DEC/(99)23 requires RLANs operating in the 5 GHz band to use transmitter power control, involving specification of a regulatory maximum transmit power and a mitigation requirement for each allowed channel, to reduce interference with satellite services. This amendment describes such a mechanism, referred to as transmit power control (TPC).

This subclause describes TPC procedures that may be used to satisfy these and similar future regulatory requirements in Europe. The procedures may also satisfy comparable needs in other regulatory domains and other frequency bands and may be useful for other purposes (e.g., reduction of interference, range control, reduction of power consumption).

STAs shall use the TPC procedures defined in this subclause if dot11SpectrumManagementRequired is true. dot11SpectrumManagementRequired shall be set to TRUE when regulatory authorities require TPC. It may also be set to TRUE in other circumstances. The TPC procedures provide for the following:

— Association of STAs with an AP in a BSS based on the STA's power capability (see 11.5.1).

— Specification of regulatory and local maximum transmit power levels for the current channel (see 11.5.2).

— Selection of a transmit power for each transmission in a channel within constraints imposed by regulatory and local requirements (see 11.5.3).

— Adaptation of transmit power based on a range of information, including path loss and link margin estimates (see 11.5.4).

For the purposes of TPC, the following statements apply:

— A STA with dot11SpectrumManagementRequired set to TRUE shall not operate in a BSS or IBSS unless the Spectrum Management bit is set to 1 in the Capability Information field in Beacon frames and Probe Response frames received from other STAs in the BSS or IBSS, *with the following exception*.

Copyright © 2003 IEEE. All rights reserved.
Authorized licensed use limited to: MIT. Downloaded on June 28,2026 at 19:19:50 UTC from IEEE Xplore. Restrictions apply.
IPR2025-01307; Samsung
Ex. 1051 - Page 60

— A STA may operate when the Spectrum Management bit is set to 0 if the STA can determine that it is in a regulatory domain that does not require TPC or can ensure that it will meet regulatory requirements even if TPC is not employed. Potential methods for determining the regulatory domain include receiving a country indication in the beacon, user confirmation, or configuration information within the device. Potential methods to ensure regulations are met even if TPC is not employed include using a transmit power that is below the legal maximum (including any mitigation factor).

— A STA shall set dot11SpectrumManagementRequired to TRUE before associating with a BSS or IBSS in which the Spectrum Management bit is set to 1 in the Capability Information field in Beacon frames and Probe Response frames received from the BSS or IBSS.

— APs may allow association of devices that do not have the Spectrum Management bit set to 1 in the Capability Information field in Association Request frames and Reassociation Request frames received from the STA to account for the existence of legacy devices that do not support TPC, but do meet regulatory requirements.

11.5.1 Association based on transmit power capability

A STA shall provide an AP with its minimum and maximum transmit power capability for the current channel when associating or reassociating, using a Power Capability element in Association Request frames or Reassociation Request frames.

An AP may use the minimum and maximum transmit power capability of associated STAs as an input into the algorithm used to determine the local transmit power constraint for any BSS it maintains. The specification of the algorithm is beyond the scope of this amendment.

An AP may reject an association or reassociation request from a STA if it considers the STA's minimum or maximum transmit power capability is unacceptable. For example, a STA's power capability might be unacceptable if it violates local regulatory constraints or increases the probability of hidden stations by a significant degree. The criteria for accepting or rejecting an association or reassociation on the basis of transmit power capability are beyond the scope of this amendment.

11.5.2 Specification of regulatory and local maximum transmit power levels

A STA shall determine a regulatory maximum transmit power for the current channel. The STA shall use the minimum of the following:

— Any regulatory maximum transmit power received in a Country element from the AP in its BSS or another STA in its IBSS and

— Any regulatory maximum transmit power for the channel in the current regulatory domain known by the STA from other sources.

A STA shall determine a local maximum transmit power for the current channel. The STA shall use the minimum of the following:

— Any local maximum transmit power received in the combination of a Country element and a Power Constraint element from the AP in its BSS or another STA in its IBSS and

— Any local maximum transmit power for the channel regulatory domain known by the STA from other sources.

Any calculation of the local maximum transmit power for the channel shall ensure the mitigation requirements for the channel in the current regulatory domain can be satisfied. The conservative approach is to set the local maximum transmit power level equal to the regulatory maximum transmit power level minus the mitigation requirement. However, it may be possible to satisfy the mitigation requirement using a higher local maximum transmit power level. A lower local maximum transmit power level may be used for other purposes (e.g., range control, reduction of interference).

Copyright © 2003 IEEE. All rights reserved.

Authorized licensed use limited to: MIT. Downloaded on June 28,2026 at 19:19:50 UTC from IEEE Xplore. Restrictions apply.
IPR2025-01307; Samsung
Ex. 1051 - Page 61

The regulatory and local maximum transmit powers may change in a STA during the life of a BSS. However, network stability should be considered when deciding how often or by how much these maximums are changed. The regulatory and local maximum transmit powers shall not change during the life of an IBSS.

An AP in a BSS and a STA in an IBSS shall advertise the regulatory maximum transmit power for the current channel in Beacon frames and Probe Response frames using a Country element. An AP in a BSS and a STA in an IBSS shall advertise the local maximum transmit power for the current channel in Beacon frames and Probe Response frames using the combination of a Country element and a Power Constraint element.

11.5.3 Selection of a transmit power

A STA may select any transmit power for transmissions in a channel within the following constraints:

— A STA shall determine a regulatory maximum transmit power and a local maximum transmit power for a channel in the current regulatory domain before transmitting in the channel.

— An AP shall use a transmit power less than or equal to the regulatory maximum transmit power level for the channel. However, the AP shall also ensure the regulatory mitigation requirement is met.

— A STA that is not an AP shall use a transmit power less than or equal to the local maximum transmit power level for the channel.

11.5.4 Adaptation of the transmit power

A STA may use any criteria, and in particular any path loss and link margin estimates, to dynamically adapt the transmit power for transmissions of an MPDU to another STA. The adaptation methods or criteria are beyond the scope of this amendment.

A STA may use a TPC Request frame to request another STA to respond with a TPC Report frame containing link margin and transmit power information. A STA receiving a TPC Request frame shall respond with a TPC Report frame containing the power used to transmit the response in the Transmit Power field and the estimated link margin in a Link Margin field.

An AP in a BSS or a STA in an IBSS shall autonomously include a TPC Report element with the Link Margin field set to 0 and containing transmit power information in the Transmit Power field in any Beacon frame or Probe Response frame it transmits.

11.6 DFS procedures

ERC/DEC/(99)23 requires RLANs operating in the 5 GHz band to implement a mechanism to avoid co-channel operation with radar systems and to ensure uniform utilization of available channels. This amendment describes such a mechanism, referred to as dynamic frequency selection (DFS).

This subclause describes DFS procedures that may be used to satisfy these and similar future regulatory requirements in Europe. The procedures may also satisfy comparable needs in other regulatory domains and frequency bands and may be useful for other purposes.

STAs shall use the DFS procedures defined in this subclause if dot11SpectrumManagementRequired is true. dot11SpectrumManagementRequired shall be set to TRUE when regulatory authorities require DFS. It may also be set to TRUE in other circumstances. The DFS procedures provide for the following:

— Associating STAs with an AP in a BSS based on the STAs' supported channels (see 11.6.1).

— Quieting the current channel so it can be tested for the presence of radar with less interference from other STAs (see 11.6.2).

— Testing channels for radar before using a channel and while operating in a channel (see 11.6.3).

Copyright © 2003 IEEE. All rights reserved.
Authorized licensed use limited to: MIT. Downloaded on June 28,2026 at 19:19:50 UTC from IEEE Xplore. Restrictions apply.
IPR2025-01307; Samsung
Ex. 1051 - Page 62

— Discontinuing operations after detecting radar in the current channel to avoid further interfering with the radar (see 11.6.4).

— Detecting radar in the current and other channels based on regulatory requirements (see 11.6.5).

— Requesting and reporting measurements in the current and other channels (see 11.6.6).

— Selecting and advertising a new channel to assist the migration of a BSS or IBSS after radar is detected (see 11.6.7).

For the purposes of DFS, the following statements apply:

— A STA with dot11SpectrumManagementRequired set to TRUE shall not operate in a BSS or IBSS unless the Spectrum Management bit is set to 1 in the Capability Information field in Beacon frames and Probe Response frames received from other STAs in the BSS or IBSS, *with the following exception*.

— A STA may operate when the Spectrum Management bit is set to 0 if the STA can determine that it is in a regulatory domain that does not require DFS or can ensure that it will meet regulatory requirements even if DFS is not employed. Potential methods for determining the regulatory domain include receiving a country indication in the beacon, user confirmation, or configuration information within the device. Potential methods to ensure regulations are met even if DFS is not employed include independently detecting radar and ceasing operation on channels on which radar is detected.

— A STA shall set dot11SpectrumManagementRequired to TRUE before associating with a BSS or IBSS in which the Spectrum Management bit is set to 1 in the Capability Information field in Beacon frames and Probe Response frames received from the BSS or IBSS.

— APs may allow association of devices that do not have the Spectrum Management bit set to 1 in the Capability Information field in Association Request frames and Reassociation Request frames received from a STA to account for the existence of legacy devices that do not support DFS, but do meet regulatory requirements.

11.6.1 Association based on supported channels

A STA shall provide an AP with a list of the channels in which it can operate when associating or reassociating using a Supported Channels element in Association Request frames or Reassociation Request frames.

An AP may use the supported channels list for associated STAs as an input into an algorithm used to select a new channel for the BSS. The specification of the algorithm is beyond the scope of this amendment.

An AP may reject an association or reassociation request from a STA if it considers the STA's supported channel list is unacceptable. For example, a STA's supported channel list might be unacceptable if it can operate only in a limited number of channels. The criteria for accepting or rejecting associations or reassociations are beyond the scope of this amendment.

11.6.2 Quieting channels for testing

An AP in a BSS may schedule quiet intervals by transmitting one or more Quiet elements in Beacon frames and Probe Response frames. The AP may stop scheduling quiet intervals or change the value of the Quiet Period field, the Quiet Duration field, and the Quiet Offset field in Quiet elements as required. Only the most recently received Beacon frame or Probe Response frame defines all future quiet intervals; therefore, quiet intervals based on older Beacon frames or Probe Response frames shall be discarded.

Only the STA starting an IBSS may specify a schedule of quiet intervals, by transmitting one or more Quiet elements in the first Beacon frame establishing the IBSS. All STAs in an IBSS shall continue these quiet interval schedules by including appropriate Quiet elements in any transmitted Beacon frames or Probe Response frames.

Copyright © 2003 IEEE. All rights reserved.

Authorized licensed use limited to: MIT. Downloaded on June 28,2026 at 19:19:50 UTC from IEEE Xplore. Restrictions apply.
IPR2025-01307; Samsung
Ex. 1051 - Page 63

Multiple independent quiet intervals may be scheduled, to ensure that not all quiet intervals have the same timing relationship to TBTT, by including multiple Quiet elements in Beacon frames or Probe Response frames.

Control of the channel is lost at the start of a quiet interval, and the network allocation vector (NAV) is set by all the STAs in the BSS or IBSS for the length of the quiet interval. Transmission of any MPDU and any associated acknowledgment shall be complete before the start of the quiet interval. If, before starting transmission of an MPDU, there is not enough time remaining to allow the transmission to complete before the quiet interval starts, the STA shall defer the transmission by selecting a random backoff time, using the present contention window (CW) (without advancing to the next value in the series). The short retry counter and long retry counter for the MSDU are not affected.

11.6.3 Testing channels for radars

A STA shall not transmit in a channel unless it has been tested for the presence of radars according to regulatory requirements (see ETSI EN 301 893).

11.6.4 Discontinuing operations after detecting radars

If a STA is operating in a channel and detects radar operating in the channel or accepts that another STA has detected radar operating in the channel then the STA shall discontinue transmissions according to regulatory requirements (see ETSI EN 301 893).

11.6.5 Detecting radars

The methods to detect radars operating in a channel that satisfy regulatory requirements (see ETSI EN 301 893) are beyond the scope of this amendment.

11.6.6 Requesting and reporting of measurements

A STA may measure one or more channels itself or a STA may request other STAs in the same BSS or IBSS to measure one or more channels on its behalf, either in a quiet interval or during normal operation.

When requesting other STAs to measure one or more channels, a STA shall use a Measurement Request frame containing one or more Measurement Request elements. The measurement request may be sent to an individual or group destination address. Addressing requests to multiple STAs should be used with care to avoid a reply storm.

The measurement requests effectively allowed by these rules are shown in Table 26a.

Table 26a—Allowed measurement requests

Service set	Source of request	Destination of request	Type of measurement request allowed
BSS	AP	STA	Individual or group
	STA	AP	Individual only
	STA	STA	None
IBSS	STA	STA	Individual or group

Copyright © 2003 IEEE. All rights reserved.
Authorized licensed use limited to: MIT. Downloaded on June 28,2026 at 19:19:50 UTC from IEEE Xplore. Restrictions apply.
IPR2025-01307; Samsung
Ex. 1051 - Page 64

A STA that successfully requests another STA to perform a measurement on another channel should not transmit MSDUs or MMPDUs to that STA during the interval defined for the measurement plus any required channel switch intervals. In determining this period, a STA shall assume that any required channel switches take less than dot11ChannelSwitchTime per switch.

A STA that receives a Measurement Request frame from a STA in its BSS or IBSS shall parse the frame's Measurement Request elements in order, with measurements starting at the times specified by the Measurement Request elements. A STA may ignore any group addressed Measurement Request frames.

Any result of a measurement request shall be returned without undue delay to the requesting STA in Measurement Report elements using one or more Measurement Report frames. The result may be the completed measurement or an indication that the STA is unable to complete the measurement request.

A STA shall report it is too late to undertake a measurement request if it receives the request after the specified starting time for the measurement.

A STA shall report it is refusing a measurement request if all of the following conditions exist:

— The STA is capable of undertaking a measurement request,

— The STA does not want to undertake the measurement request at this time, and

— The measurement request is not mandatory (NOTE: measurements are specified as mandatory or optional in 7.3.2.19).

A STA shall report it is incapable a measurement request if any of the following conditions exists:

— The STA is incapable of undertaking an optional measurement request, or

— The STA does not support the channel specified in a mandatory measurement request, or

— The STA does not support any requested parallel measurements in the same or different channels.

The Measurement Report frames shall contain the same Dialog Token field as the corresponding Measurement Request frame, and each Measurement Report element shall contain the same Measurement Token field as the corresponding Measurement Request element.

A STA may autonomously report measurements to another STA in its BSS or IBSS using a Measurement Report frame with a Dialog Token field set to 0 with one or more Measurement Report elements. A STA in an IBSS may also autonomously report measurements to other STAs in the IBSS using the Channel Map field in the IBSS DFS element in a Beacon frame or Probe Response frame.

A STA may enable or disable measurement requests or autonomous measurement reports from another STA by transmitting Measurement Request elements with the Enable bit set to 1 and the Request bit and Report bit set to 0 or 1, as appropriate. These elements do not require a corresponding Measurement Report element in a Measurement Report frame. All measurement requests and reports are enabled by default. An AP may ignore a request to disable a mandatory measurement request. All others requests shall be honored.

11.6.7 Selecting and advertising a new channel

An attempt may be made to move a BSS to a new operating channel. It is an objective that disruption to the BSS is minimized in this process, although it should be recognized that a channel switch might not successfully move all STAs. It should also be stressed that the channel switch process is distinct from the regulatory requirement to cease transmission on a particular channel in the presence of radar.

Copyright © 2003 IEEE. All rights reserved.

Authorized licensed use limited to: MIT. Downloaded on June 28,2026 at 19:19:50 UTC from IEEE Xplore. Restrictions apply.
IPR2025-01307; Samsung
Ex. 1051 - Page 65

11.6.7.1 Selecting and advertising a new channel in an infrastructure BSS

The decision to switch to a new operating channel in an infrastructure BSS shall be made only by the AP. An AP may make use of the information in Supported Channel elements and the results of measurements undertaken by the AP and other STAs in the BSS to assist the selection of the new channel. The algorithm to choose a new channel is beyond the scope of this amendment, but shall satisfy applicable regulatory requirements, including uniform spreading rules and channel testing rules. The AP shall attempt to select a new channel that is supported by all associated STAs, although it should be noted that this might not always be possible.

An AP shall inform associated STAs that the AP is moving to a new channel and maintain the association by advertising the switch using Channel Switch Announcement elements in Beacon frames, Probe Response frames, and Channel Switch Announcement frames until the intended channel switch time. The AP may force STAs in the BSS to stop transmissions until the channel switch takes place using the Channel Switch Mode field in the Channel Switch Announcement element. If possible, the channel switch should be scheduled so that all STAs in the BSS, including STAs in power save mode, have the opportunity to receive at least one Channel Switch Announcement element before the switch. The AP may send the Channel Switch Announcement frame in a BSS without performing a backoff, after determining the wireless medium (WM) is idle for one PIFS period.

A STA that receives a Channel Switch Announcement element may choose not to perform the specified switch, but to take alternative action. For example, it may choose to move to a different BSS.

A STA in a BSS that is not the AP shall not transmit the Channel Switch Announcement element.

11.6.7.2 Selecting and advertising a new channel in an IBSS

DFS in an IBSS is complicated by the following:

— There is no central AP function for collating measurements or coordinating a channel switch. If STAs make independent decisions to switch channel in the presence of radar, there is a danger that all STAs will announce a switch to differing channels if several of them detect the radar.
— There is no association protocol that can be used to
  — Exchange supported channel information and
  — Determine membership of the IBSS at a given instant for requesting measurements.
— Beaconing is a shared process; therefore, it cannot be guaranteed that a STA that has something to send (e.g., a channel switch message) will be the next STA to beacon.

The DFS owner service, IBSS DFS element, and Channel Switch Announcement frame address these complications.

— The DFS owner service provides a central point of coordination for a channel switch. It attempts to minimize the probability that multiple STAs concurrently decide to switch to different channels. The DFS Owner field and DFS Recovery Interval field within the IBSS DFS element support the DFS owner service.
— Each STA shall include a Channel Map field within the IBSS DFS elements that it transmits. The channel map communicates the STA-supported channel set and basic measurement reports for that STA.
— The ability to send a Channel Switch Announcement element within a management frame other than a Beacon frame or Probe Response frame is essential.

The potential for hidden nodes within an IBSS means that the IBSS channel switch protocol is best effort. All members of an IBSS shall have an individual responsibility to cease transmission on a particular channel in the presence of radar.

Copyright © 2003 IEEE. All rights reserved.
Authorized licensed use limited to: MIT. Downloaded on June 28,2026 at 19:19:50 UTC from IEEE Xplore. Restrictions apply.
IPR2025-01307; Samsung
Ex. 1051 - Page 66

A STA at which an IBSS is started shall be a DFS owner in that IBSS. That STA shall include its MAC address in the DFS Owner field of the IBSS DFS element and DFS Recovery Interval field from the MLME.START.request parameter. The purpose of the DFS owner is to coordinate a channel switch when required. All STAs within a spectrum-managed IBSS shall have the ability to become DFS owner.

Each STA in an IBSS shall adopt the DFS owner and the DFS owner recovery interval from any valid IBSS DFS element when the frame contained a matching service set identifier (SSID) and the value of the timestamp is later than the STA's TSF timer. The STA shall include the adopted values within the IBSS DFS elements it transmits. Because all STAs in an IBSS participate in sending Beacon frames, this process will always, over a number of beacon intervals, result in a unified view of one DFS owner throughout the IBSS.

If a STA detects radar and wants to attempt a channel switch using the DFS owner, the STA shall broadcast one or more Measurement Report frames indicating the presence of the radar.

A DFS owner receiving a Measurement Report frame indicating the presence of radar in the current channel shall select and advertise a new operating channel (including the possibility of no change). The DFS owner may make use of information received in Channel Map fields and from measurements undertaken by other members of the IBSS to assist the selection of the new channel. The algorithm to choose a new channel is beyond the scope of this amendment, but shall satisfy any regulatory requirements, including uniform spreading rules and channel testing rules. The DFS owner shall attempt to select a new channel that is supported by all members of the IBSS. It should be noted that this process might be imperfect in that the DFS owner may have incomplete knowledge and there may be no suitable channel.

The DFS owner shall attempt to make the members of the IBSS aware of the new operating channel by broadcasting at least one Channel Switch Announcement frame. The DFS owner shall also include the Channel Switch Announcement element in all Beacon frames, Probe Response frames, or Channel Switch Announcement frames until the intended channel switch time. A STA that receives a valid Channel Switch Announcement element shall repeat this element in all Beacon frames and Probe Response frames that it transmits. The DFS owner may attempt to silence STAs in the IBSS until the channel switch takes place using the Channel Switch Mode field in the Channel Switch Announcement element. If possible, the channel switch should be scheduled so that all STAs in the IBSS, including STAs in power save mode, have the opportunity to receive at least one Channel Switch Announcement element before the switch.

If a STA does not receive a valid Channel Switch Announcement element from the DFS owner within DFS recovery time measured from the end of the frame within which radar notification was first transmitted by the STA or received from another STA, then it shall enter a DFS owner recovery mode. In DFS owner recovery mode, the STA shall assume the role of DFS owner, shall select a new operating channel, and shall advertise the new channel by transmitting a Channel Switch Announcement frame using the contention resolution algorithm defined for beacon transmission at TBTT in 11.1.2.2. The STA shall also include the Channel Switch Announcement element in all Beacon frames and Probe Response frames until the intended channel switch time. A STA that is not the DFS owner shall not initiate a channel switch.

If the STA receives a valid Channel Switch Announcement element from another member of the IBSS, the STA shall leave DFS owner recovery mode prior to the channel switch and adopt the received channel switch information. If the Channel Switch Announcement element was within a Beacon frame or Probe Response frame, the STA shall also adopt the DFS owner address from the IBSS DFS element. If the Channel Switch Announcement element was within a Channel Switch Announcement frame, the STA shall adopt the DFS owner from the transmitter address (TA) of the received frame.

There are several circumstances when DFS owner recovery is required (e.g., if the original DFS owner has left the network or if the original measurement report was not received by the initial DFS owner). It should be noted that DFS owner recovery might temporarily give rise to more than one DFS owner within the IBSS. This risk is mitigated by the random nature of the IBSS DFS recovery mechanism. However, because all

Copyright © 2003 IEEE. All rights reserved.

Authorized licensed use limited to: MIT. Downloaded on June 28,2026 at 19:19:50 UTC from IEEE Xplore. Restrictions apply.
IPR2025-01307; Samsung
Ex. 1051 - Page 67

STAs in an IBSS participate in sending Beacon frames, over a number of beacon periods, there will be convergence from multiple DFS owners to one DFS owner.

17. Orthogonal frequency division multiplexing (OFDM) PHY specification for the 5 GHz band

17.3 OFDM physical layer convergence procedure (PLCP) sublayer

17.3.8 Physical medium dependent (PMD) operating specifications (general)

17.3.8.3 Operating channel frequencies

17.3.8.3.3 Channelization

Change first two rows and insert a new third row in Table 94 as follows:

Table 94—Valid operating channel numbers by regulatory domain and band

Regulatory domain	Band (GHz)	Operating channel numbers	Channel center frequencies (MHz)
United States CEPT	U-NII lower band (5.15–5.25)	36 40 44 48	5180 5200 5220 5240
United States CEPT	U-NII middle band (5.25–5.35)	52 56 60 64	5260 5280 5300 5320
CEPT	(5.47–5.725)	100 104 108 112 116 120 124 128 132 136 140	5500 5520 5540 5560 5580 5600 5620 5640 5660 5680 5700

Delete the first paragraph after Table 94:

~~Figure 123 shows the channelization scheme for this standard, which shall be used with the FCC U-NII frequency allocation. The lower and middle U-NII sub-bands accommodate eight channels in a total bandwidth of 200 MHz. The upper U-NII band accommodates four channels in a 100 MHz bandwidth. The centers of the outermost channels shall be at a distance of 30 MHz from the band's edges for the lower and middle U-NII bands, and 20 MHz for the upper U-NII band.~~

Copyright © 2003 IEEE. All rights reserved.
Authorized licensed use limited to: MIT. Downloaded on June 28,2026 at 19:19:50 UTC from IEEE Xplore. Restrictions apply.
IPR2025-01307; Samsung
Ex. 1051 - Page 68

Change the third paragraph after Table 94 as follows:

The center frequency is indicated in Figure 123 for the US frequency channel plan; however, no subcarrier is allocated on the center frequency as described in Figure 121.

17.3.9 PMD transmit specifications

17.3.9.1 Transmit power levels

Change the first paragraph of 17.3.9.1 as follows:

The maximum allowable output power ~~according to FCC regulations~~ by regulatory domain is shown in Table 95.

Change Table 95 as follows:

Table 95—Transmit power level ~~for the United States~~ by regulatory domain

Frequency band (GHz)	United States (Maximum output power with up to 6 dBi antenna gain) (mW)	CEPT (EIRP)
5.15–5.25	40 (2.5 mW/MHz)	200 mW
5.25–5.35	200 (12.5 mW/MHz)	200 mW
5.470–5.725	—	1 W
5.725–5.825	800 (50 mW/MHz)	—

Copyright © 2003 IEEE. All rights reserved.

Authorized licensed use limited to: MIT. Downloaded on June 28,2026 at 19:19:50 UTC from IEEE Xplore. Restrictions apply.

Annex A

(normative)

Protocol Implementation Conformance Statement (PICS) proforma[4]

A.4 PICS proforma—IEEE Std 802.11, 1999 Edition

A.4.3 IUT configuration

Insert the following at the end of the table in A.4.3:

Item	IUT configuration	References	Status	Support
*CF10	Is spectrum management operation supported?	7.3.1.4, 11.6	CF6:O	Yes, No

Insert A.4.12 after A.4.11 as follows:

A.4.12 Spectrum management extensions

Item	IUT configuration	References	Status	Support
SM1	Country, Power Constraint, and transmit power control (TPC) Report elements included in Beacon and Probe Response frames	7.2.3.1, 7.2.3.9, 7.3.2.9, 7.3.2.13, 7.3.2.16	CF9: M	Yes, No
SM2	Spectrum Management Capability bit	7.3.1.4	CF9: M	Yes, No
SM3	Power Capability and Supported Channels elements in Association and Reassociation frames	7.2.3.4, 7.2.3.5, 11.6.1	CF9:M	Yes, No
SM4	Action frame protocol for spectrum management actions	7.3.1.11, 7.4	CF9:M	Yes, No
	Measurement Request frame	7.4.1.1	CF9:M	Yes, No
	Measurement Report frame	7.4.1.2	CF9:M	Yes, No
	TPC Request frame	7.4.1.3	CF9:M	Yes, No
	TPC Report frame	7.4.1.4	CF9:M	Yes, No
	Channel Switch Announcement frame	7.4.1.5	CF9:M	Yes, No

[4]*Copyright release for PICS proformas:* Users of this standard may freely reproduce the PICS proforma in this annex so that it can be used for its intended purpose and may further publish the completed PICS.

Copyright © 2003 IEEE. All rights reserved.
Authorized licensed use limited to: MIT. Downloaded on June 28,2026 at 19:19:50 UTC from IEEE Xplore. Restrictions apply.
IPR2025-01307; Samsung
Ex. 1051 - Page 70

Item	IUT configuration	References	Status	Support
SM5	Measurement requests Basic request Clear channel assessment (CCA) request Receive power indication (RPI) histogram Enabling/disabling requests and reports	 7.3.2.19.1 7.3.2.19.2 7.3.2.19.3 7.3.2.19	 CF9:M CF9:O CF9:O CF9:M	 Yes, No Yes, No, N/A Yes, No, N/A Yes, No
SM6	Measurement reports Basic report CCA report RPI histogram report Refusal to measure	 7.3.2.20.1 7.3.2.20.2 7. 3.2.20.3 7.3.2.20	 CF9:M CF9:O CF9:O CF9:M	 Yes, No Yes, No, N/A Yes, No, N/A Yes, No
SM7	Quiet interval Access point (AP)-defined Quiet interval Station (STA)-defined Quiet interval STA support for Quiet interval	 7.2.3.1, 7.2.3.9, 7.3.2.21, 11.6.2 7.2.3.1, 7.2.3.9, 7.3.2.21,11.6.2 7.2.3.1, 7.2.3.9, 7.3.2.21,11.6.2	 (CF1 and CF9):M (CF2 and CF9):M CF9:M	 Yes, No Yes, No Yes, No
SM8	Association control based on spectrum management capability	11.5, 11.6	(CF1 and CF9):M	Yes, No
SM9	Association control based on transmit power capability	11.5.1	(CF1 and CF9):M	Yes, No
SM10	Maximum transmit power Levels AP determination and communication of local maximum transmit power level STA determination and communication of local maximum transmit power level	 11.5.2 11.5.2	 (CF1 and CF9):M (CF2 and CF9):M	 Yes, No Yes, No
SM11	Selection of transmit power	11.5.3	CF9:M	Yes, No
SM12	Adaptation of transmit power TPC report in Beacon and Probe Response frames Dynamic transmit power adaptation	 11.5.4 11.5.4	 CF9:M CF9:O	 Yes, No Yes, No, N/A
SM13	Testing channels for radars	11.6.3	CF9:M	Yes, No
SM14	Detecting and discontinuing operations after detection of a radar	11.6.4	CF9:M	Yes, No
SM15	Requesting and reporting of measurements	11.6.6	CF9:M	Yes, No
SM16	Autonomous reporting of radars	11.6.6	CF9:M	Yes, No
SM17	Independent basic service set (IBSS) dynamic frequency selection (DFS) Element including channel map	7.3.2.22	(CF2 and CF9): M	Yes, No
SM18	DFS owner function	11.6.7	(CF2 and CF9): M	Yes, No

Copyright © 2003 IEEE. All rights reserved.

Authorized licensed use limited to: MIT. Downloaded on June 28,2026 at 19:19:50 UTC from IEEE Xplore. Restrictions apply.
IPR2025-01307; Samsung
Ex. 1051 - Page 71

Item	IUT configuration	References	Status	Support
SM19	DFS owner recovery procedure	11.6.7	(CF2 and CF9): M	Yes, No
SM20	Channel switch procedure			
	Transmission of channel switch announcement and channel switch procedure by an AP	11.6.7	(CF1 and CF9): M	Yes, No
	Transmission of channel switch announcement and channel switch procedure by a STA	11.6.7	(CF2 and CF9): M	Yes, No
	Reception of channel switch announcement and channel switch procedure by a STA	11.6.7	CF9:M	Yes, No

Copyright © 2003 IEEE. All rights reserved.
Authorized licensed use limited to: MIT. Downloaded on June 28,2026 at 19:19:50 UTC from IEEE Xplore. Restrictions apply.
IPR2025-01307; Samsung
Ex. 1051 - Page 72

Annex D

(normative)

ASN.1 encoding of the MAC and PHY MIB

In "Major Sections" of Annex D, add the following text to the end of the Station Management attributes:

```
dot11SpectrumManagementTable ::= {dot11smt 8}
```

In the dot11StationConfig table of Annex D, change the dot11StationConfigEntry sequence list as follows:

```
Dot11StationConfigEntry ::=
     SEQUENCE {
          dot11StationID                        MacAddress,
          dot11MediumOccupancyLimit             INTEGER,
          dot11CFPollable                       TruthValue,
          dot11CFPPeriod                        INTEGER,
          dot11CFPMaxDuration                   INTEGER,
          dot11AuthenticationResponseTimeOut    Unsigned32,
          dot11PrivacyOptionImplemented         TruthValue,
          dot11PowerManagementMode              INTEGER,
          dot11DesiredSSID                      OCTET STRING,
          dot11DesiredBSSType                   INTEGER,
          dot11OperationalRateSet               OCTET STRING,
          dot11BeaconPeriod                     INTEGER,
          dot11DTIMPeriod                       INTEGER,
          dot11AssociationResponseTimeOut       Unsigned32,
          dot11DisassociateReason               INTEGER,
          dot11DisassociateStation              MacAddress,
          dot11DeauthenticateReason             INTEGER,
          dot11DeauthenticateStation            MacAddress,
          dot11AuthenticateFailStatus           INTEGER,
          dot11AuthenticateFailStation          MacAddress,
          dot11MultiDomainCapabilityImplemented TruthValue,
          dot11MultiDomainCapabilityEnabled     TruthValue,
          dot11CountryString                    OCTET STRING, }
          dot11SpectrumManagementImplemented    TruthValue,
          dot11SpectrumManagementRequired       TruthValue }
```

Insert the following elements to the end of the dot11StationConfigEntry element definitions after dot11CountryString:

```
dot11SpectrumManagementImplemented OBJECT-TYPE
     SYNTAX TruthValue
     MAX-ACCESS read-write
     STATUS current
     DESCRIPTION
          "This attribute, when TRUE, indicates that the station
          implementation is capable of supporting spectrum management.
```

Copyright © 2003 IEEE. All rights reserved.

Authorized licensed use limited to: MIT. Downloaded on June 28,2026 at 19:19:50 UTC from IEEE Xplore. Restrictions apply.

```
          The capability is disabled otherwise. The default value of this
          attribute is FALSE."
   ::= { dot11StationConfigEntry 24 }

dot11SpectrumManagementRequired OBJECT-TYPE
     SYNTAX TruthValue
     MAX-ACCESS read-write
     STATUS current
     DESCRIPTION
          "A STA will use the defined TPC and DFS procedures if and only
          if this attribute is TRUE. The default value of this attribute
          is FALSE."
   ::= { dot11StationConfigEntry 25 }
```

Insert the following dot11SpectrumManagement table after the end of the dot11MultiDomainCapability table:

```
-- ******************************************************************
-- * dot11SpectrumManagement TABLE
-- ******************************************************************

dot11SpectrumManagementTable OBJECT-TYPE
     SYNTAX SEQUENCE OF Dot11SpectrumManagementEntry
     MAX-ACCESS not-accessible
     STATUS current
     DESCRIPTION
          "(Conceptual) table of attributes for spectrum management"
   ::= {dot11smt 8}

dot11SpectrumManagementEntry OBJECT-TYPE
     SYNTAX Dot11SpectrumManagementEntry
     MAX-ACCESS not-accessible
     STATUS current
     DESCRIPTION
          "An entry (conceptual row) in the Spectrum Management Table.
          IfIndex - Each 802.11 interface is represented by an ifEntry.
          Interface tables in this MIB are indexed by ifIndex."
     INDEX {ifIndex, dot11SpectrumManagementIndex}
   ::= { dot11SpectrumManagementTable 1 }

Dot11SpectrumManagementEntry ::=
     SEQUENCE {
          dot11SpectrumManagementIndex     Integer32,
          dot11MitigationRequirement       Integer32,
          dot11ChannelSwitchTime           Integer32,
          dot11PowerCapabilityMax          Integer32,
          dot11PowerCapabilityMin          Integer32 }

dot11SpectrumManagementIndex OBJECT-TYPE
     SYNTAX Integer32
     MAX-ACCESS not-accessible
     STATUS current
     DESCRIPTION
```


Copyright © 2003 IEEE. All rights reserved.
Authorized licensed use limited to: MIT. Downloaded on June 28,2026 at 19:19:50 UTC from IEEE Xplore. Restrictions apply.
IPR2025-01307; Samsung
Ex. 1051 - Page 74

```
          "The auxiliary variable used to identify instances of the
          columnar objects in the Spectrum Management Table."
   ::= { dot11SpectrumManagementEntry 1 }

dot11MitigationRequirement OBJECT-TYPE
     SYNTAX Integer32
     MAX-ACCESS read-write
     STATUS current
     DESCRIPTION
          "This attribute shall indicate the mitigation requirement in dB
          required. The default value of this attribute shall be 3 dB."
   ::= { dot11SpectrumManagementEntry 2 }

dot11ChannelSwitchTime OBJECT-TYPE
     SYNTAX Integer32
     MAX-ACCESS read-write
     STATUS current
     DESCRIPTION
          "This attribute shall indicate assumed channel switch time,
          measured in TUs. The unit of this attribute is TUs. The default
          value of this attribute shall be 2 TUs. The minimum value shall
          be 1 TU."
   ::= { dot11SpectrumManagementEntry 3 }

dot11PowerCapabilityMax OBJECT-TYPE
     SYNTAX Integer32
     MAX-ACCESS read-only
     STATUS current
     DESCRIPTION
          "This attribute shall indicate the maximum transmit Power
          Capability of this station. The unit of this attribute is dBm.
          The default value of this attribute shall be 0 dBm."
   ::= { dot11SpectrumManagementEntry 4 }

dot11PowerCapabilityMin OBJECT-TYPE
     SYNTAX Integer32
     MAX-ACCESS read-only
     STATUS current
     DESCRIPTION
          "This attribute shall indicate the minimum transmit Power
          Capability of this station. The unit of this attribute is dBm.
          The default value of this attribute shall be -100 dBm."
   ::= { dot11SpectrumManagementEntry 5 }

-- ******************************************************************
-- * End of dot11SpectrumManagement TABLE
-- ******************************************************************
```

Copyright © 2003 IEEE. All rights reserved.

Authorized licensed use limited to: MIT. Downloaded on June 28,2026 at 19:19:50 UTC from IEEE Xplore. Restrictions apply.
IPR2025-01307; Samsung
Ex. 1051 - Page 75