US 20040165828A1

(19) United States

(12) Patent Application Publication

(10) Pub. No.: US 2004/0165828 A1

(43) Pub. Date: Aug. 26, 2004

Capewell et al.

(54) SYSTEM AND METHOD FOR COLLIMATING AND REDIRECTING BEAMS IN A FIBER OPTIC SYSTEM

(75) Inventors: **Dale Capewell**, Agoura Hills, CA (US); **Sam Beizai**, Sherman Oaks, CA (US)

Correspondence Address:
Pillsbury Winthrop LLP
Intellectual Property Group
Suite 2800
725 S. Figueroa Street
Los Angeles, CA 90017-5406 (US)

(73) Assignee: **INTEL CORPORATION**

(21) Appl. No.: **10/790,573**

(22) Filed: **Mar. 1, 2004**

Related U.S. Application Data

(62) Division of application No. 10/003,075, filed on Oct. 31, 2001, now Pat. No. 6,751,379.

(60) Provisional application No. 60/244,941, filed on Nov. 1, 2000.

Publication Classification

(51) **Int. Cl.**[7] **G02B 6/26**

(52) **U.S. Cl.** **385/47**

(57) **ABSTRACT**

A connector to an optical fiber comprises a prism, a ferrule and an aspheric lens. The prism includes a triangular wedge element having a first surface, a second surface and a base. The ferrule guides the optical fiber so as to contact the optical fiber with the first surface of the prism. The aspheric lens is integrated on the second surface, the integrated aspheric lens being positioned so that the prism serves to redirect a light beam at an angle relative to an axis of the optical source input through total internal reflection by utilizing the base of the triangle wedge element. The aspheric lens serves to collimate the redirected light beam or focus the light beam before being redirected. This arrangement may, for example, be used within a WDM system to multiplex and de-multiplex several wavelengths of light, using a "zig-zag" optical path configuration and thin film filters to separate the wavelengths.

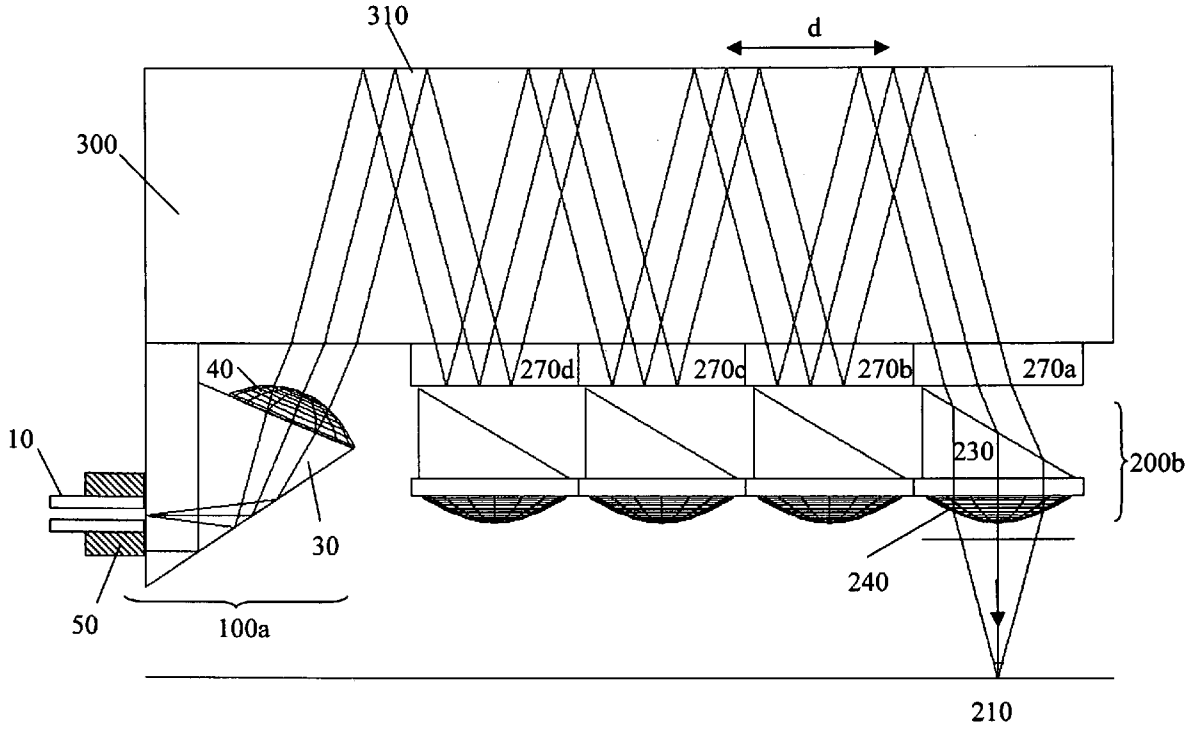

CYTEK V. BECKMAN
IPR2025-01319
BECKMAN 2014

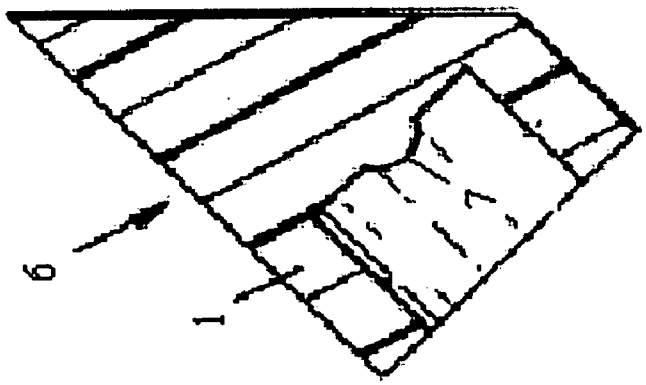

Figure 1b (Prior Art)

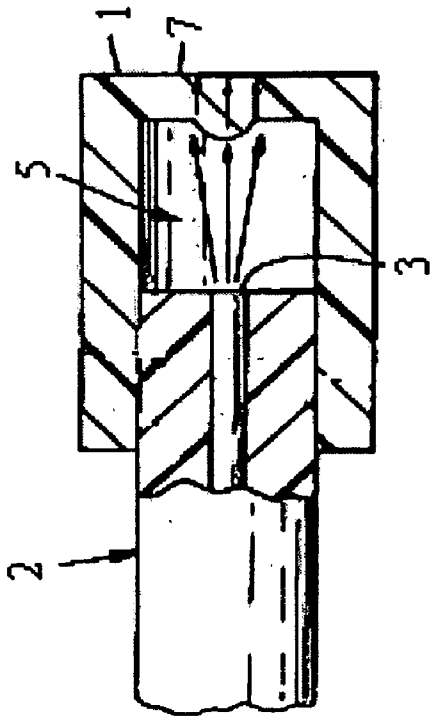

Figure 1a (Prior Art)

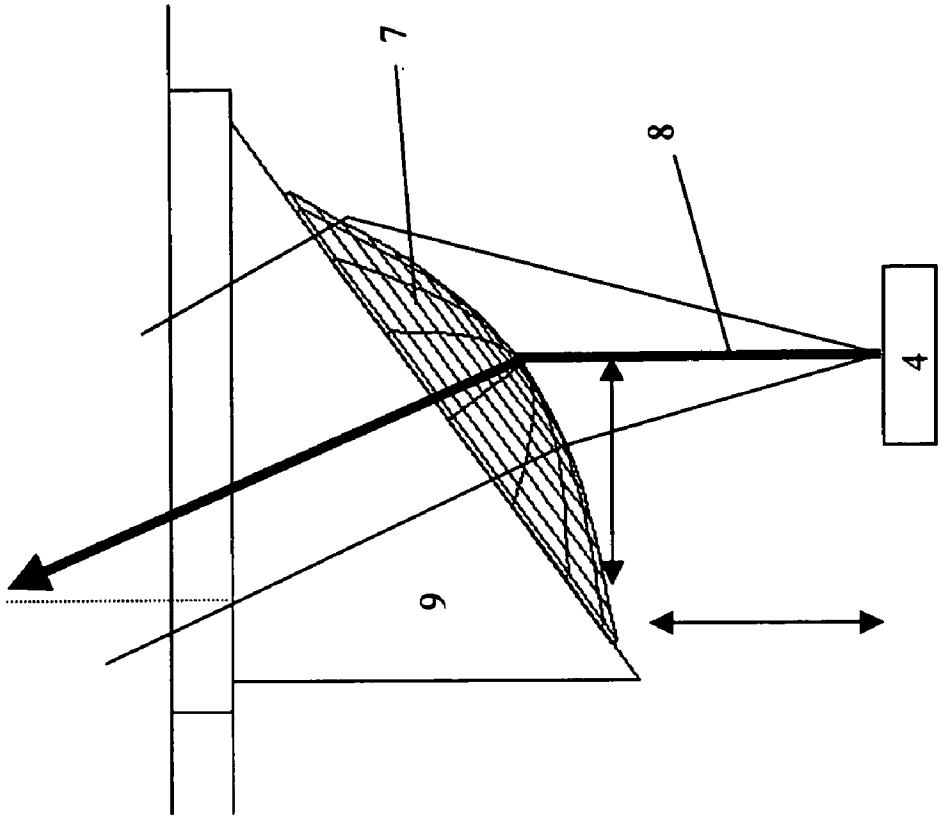

Figure 2
(Prior Art)

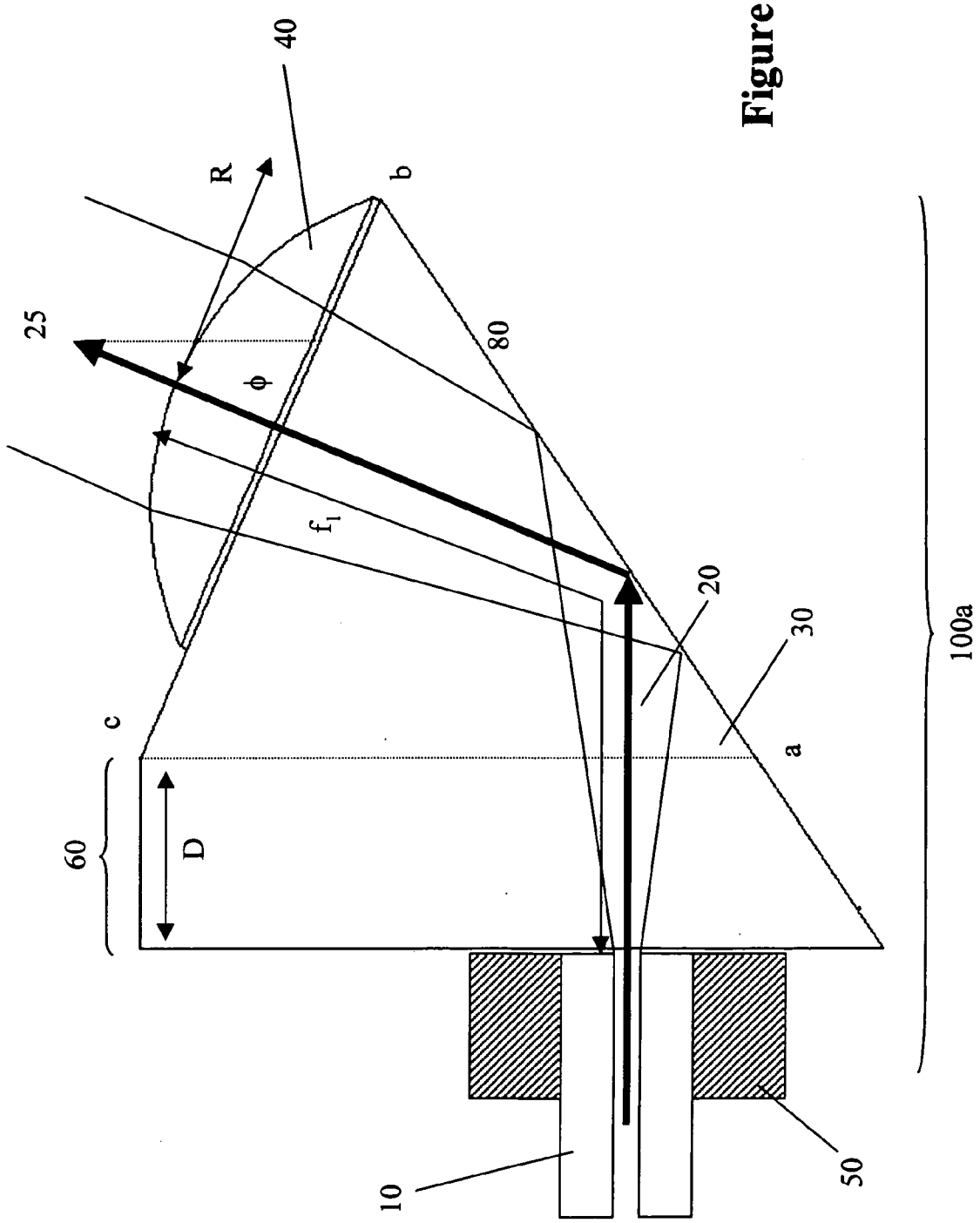

Figure 3a

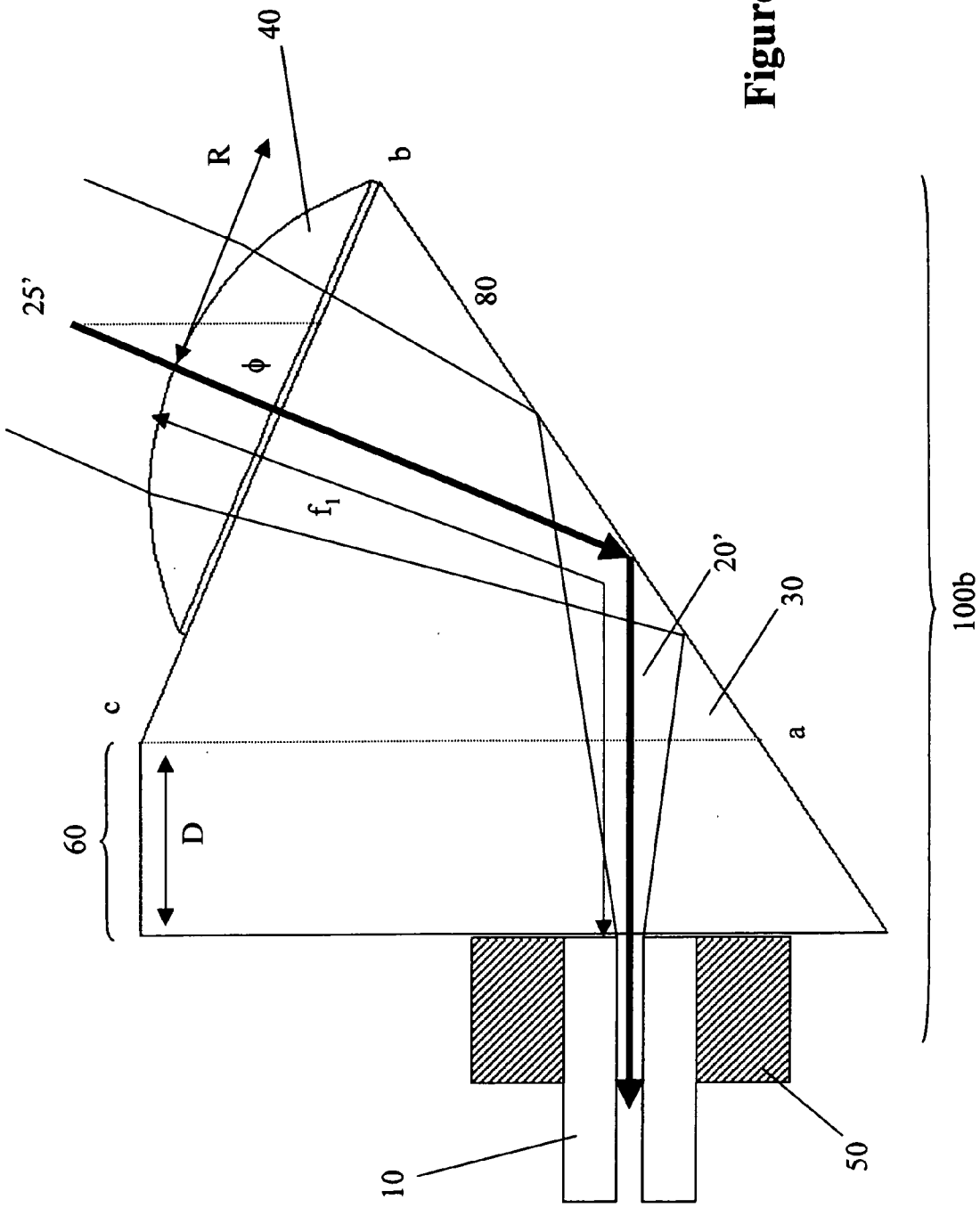

Figure 3b

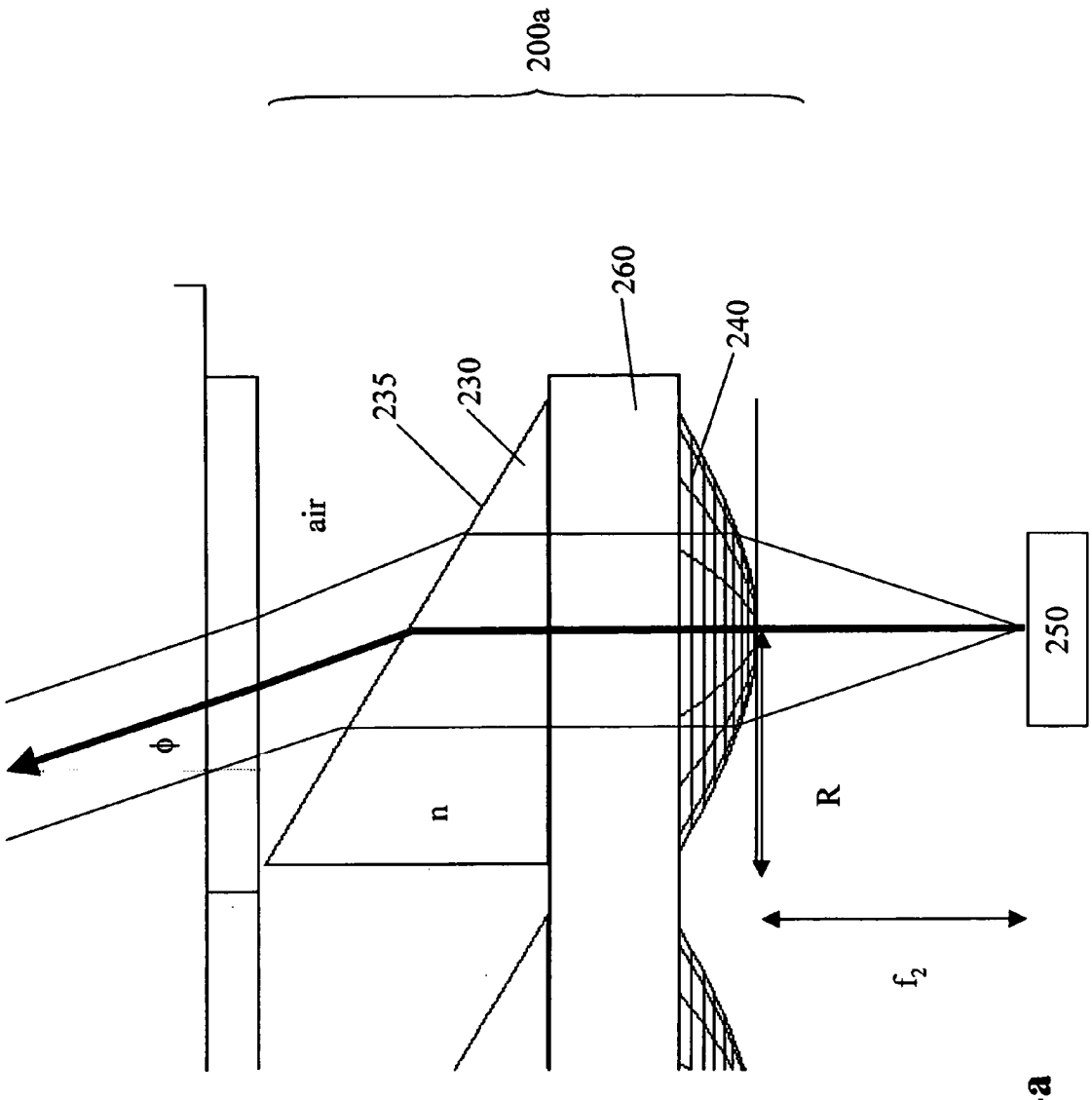

Figure 4a

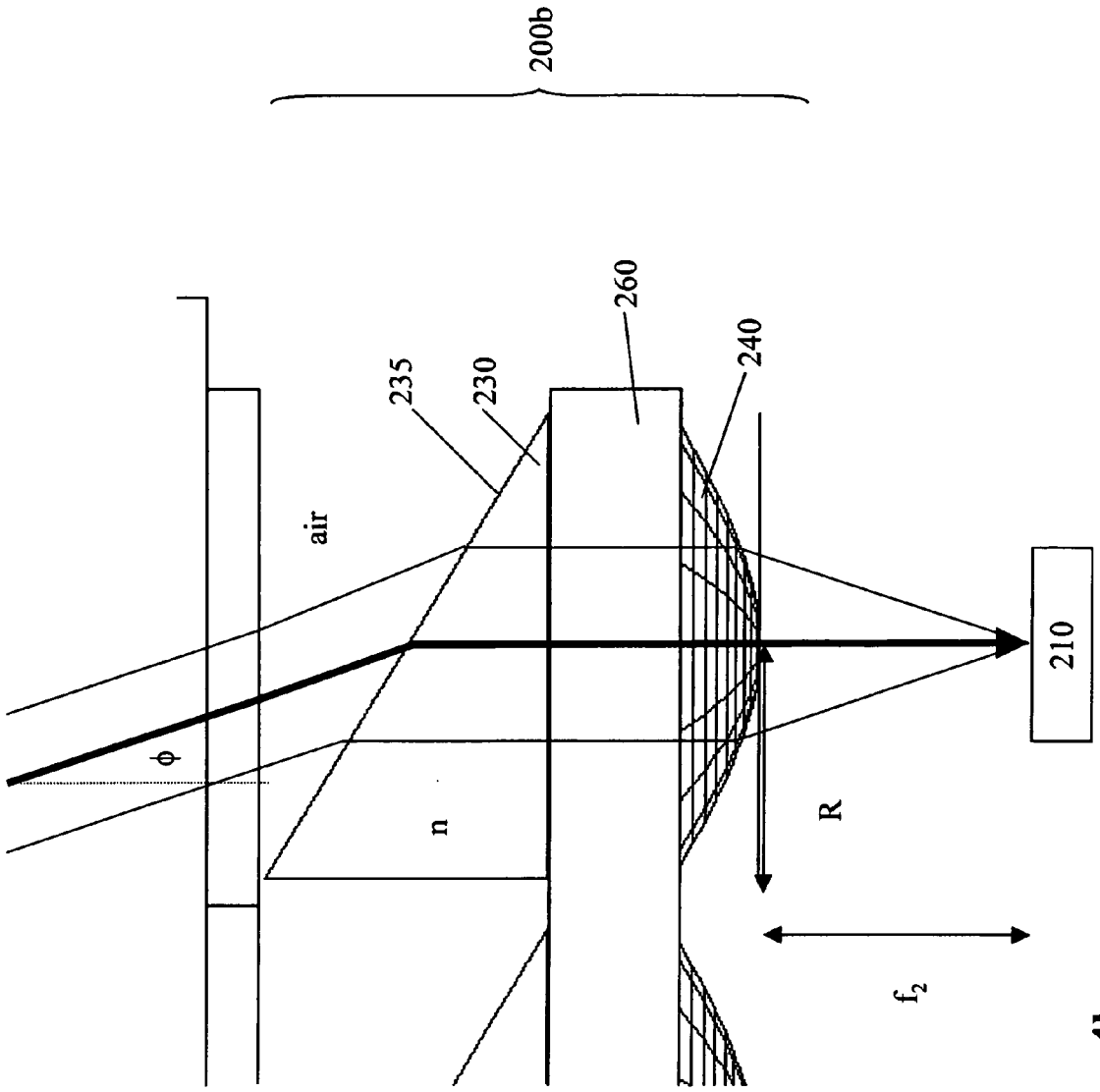

Figure 4b

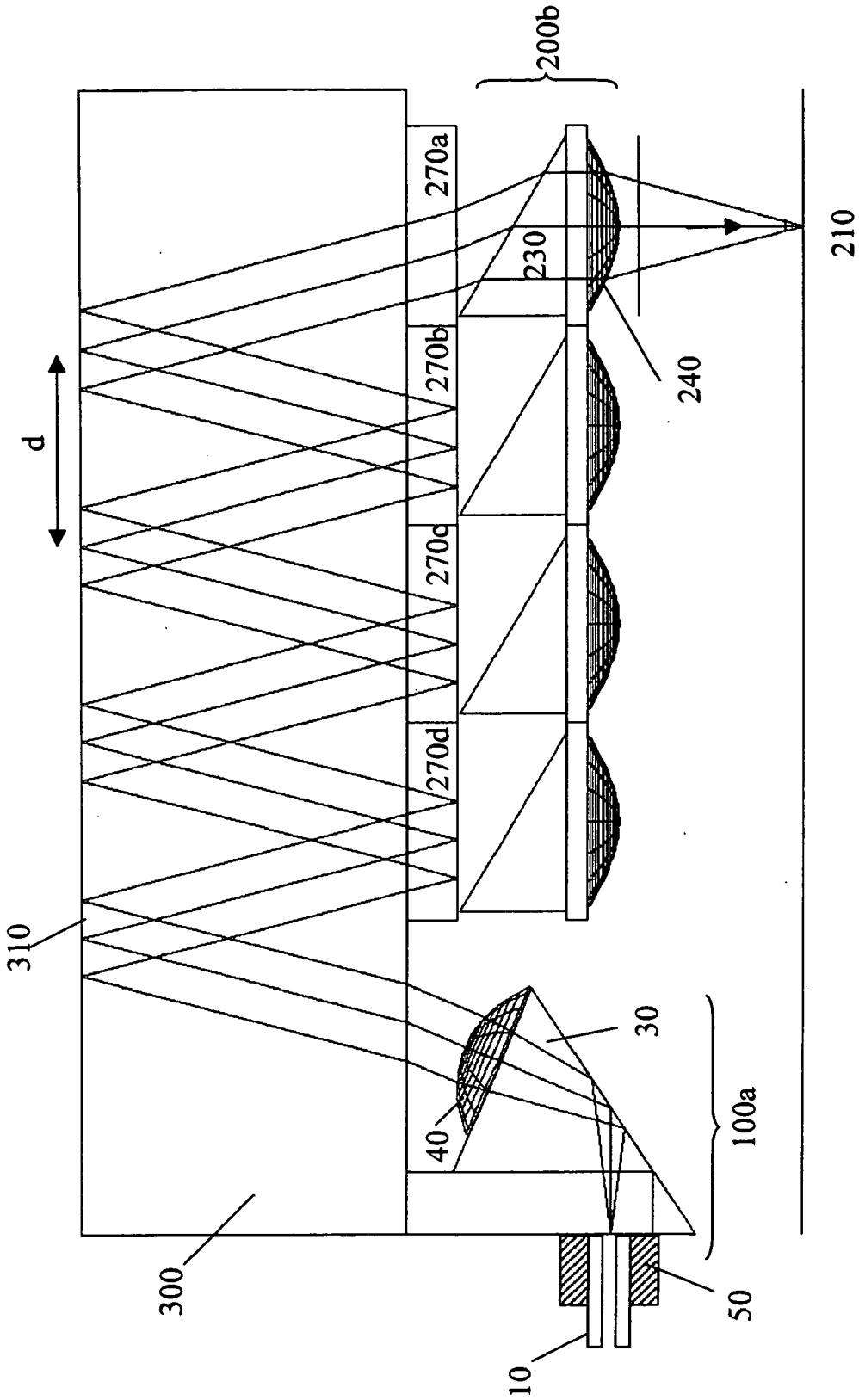

Figure 5a

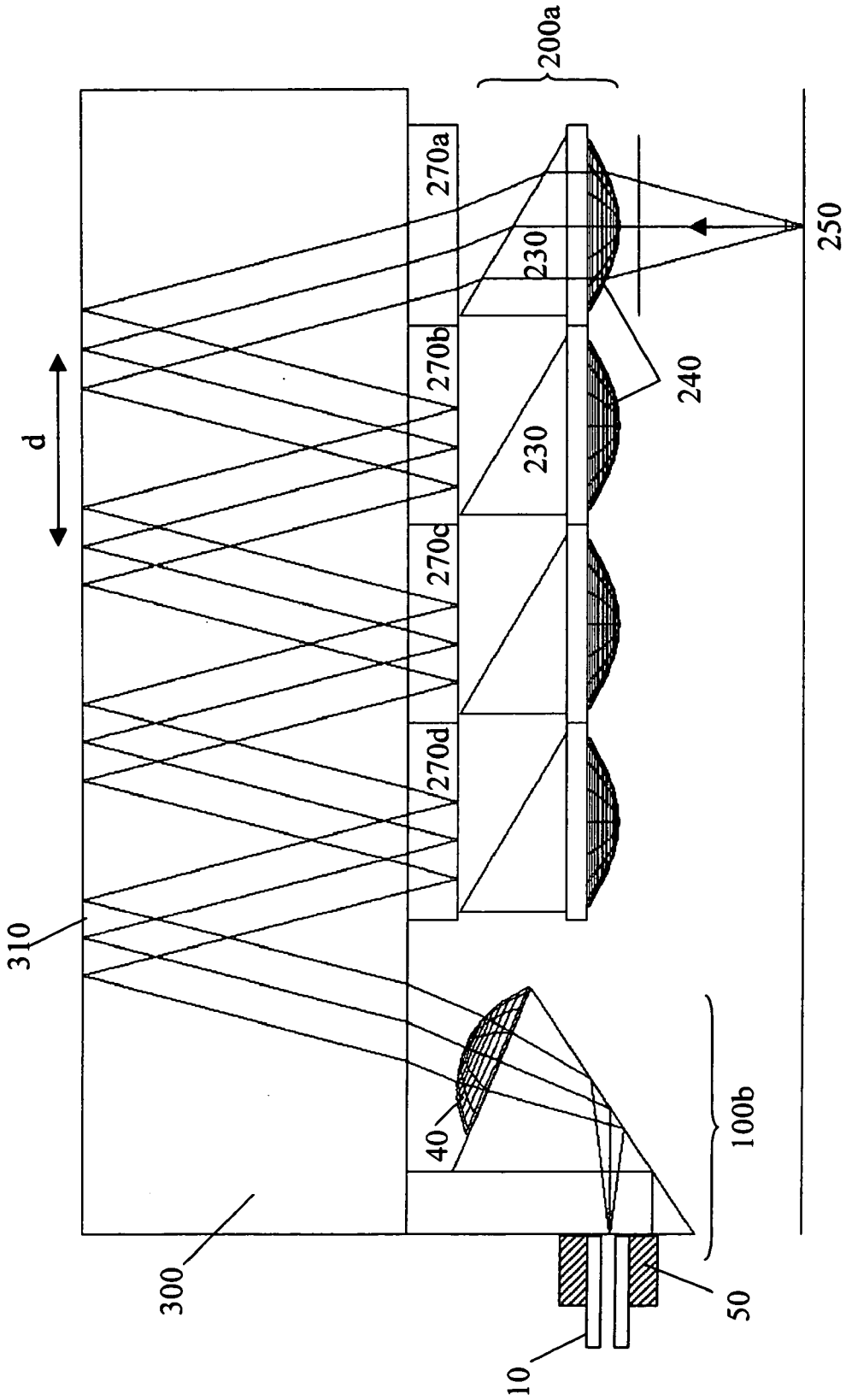

Figure 5b

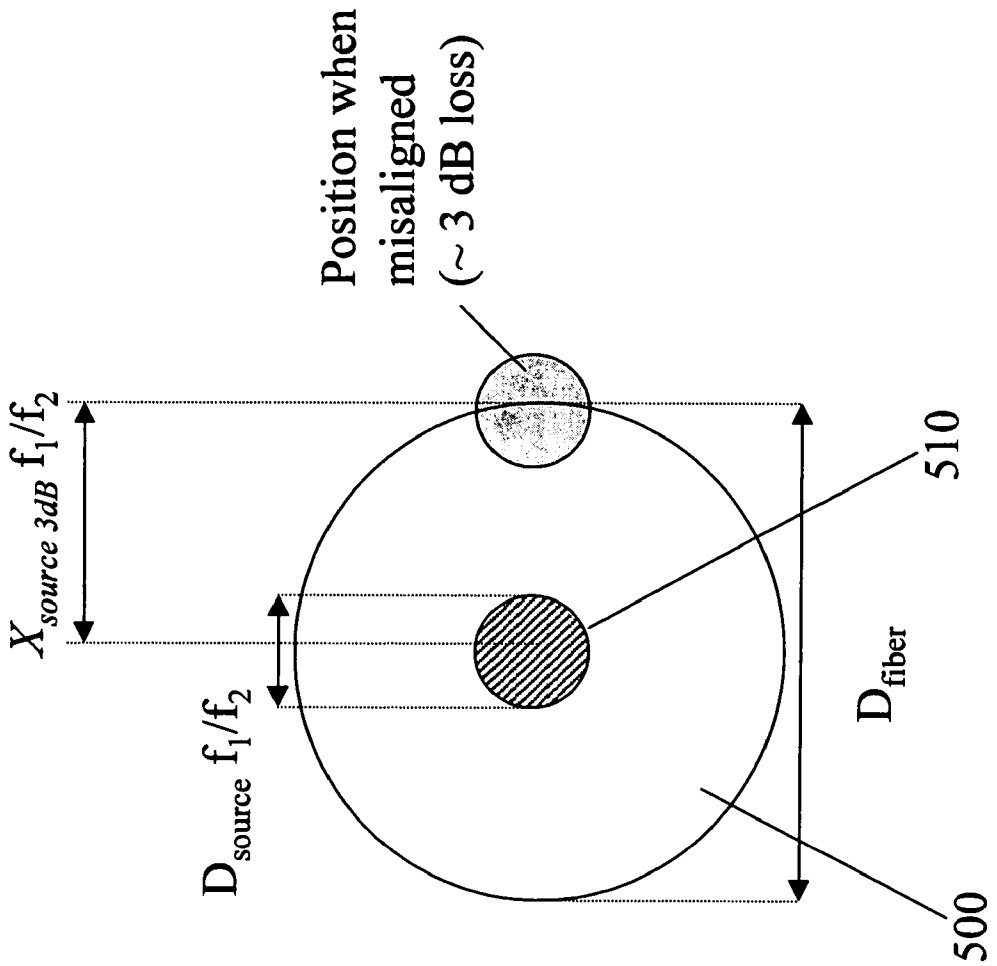
Position when misaligned (~ 3 dB loss)
$X_{source\ 3dB}\ f_1/f_2$
$D_{source}\ f_1/f_2$
D_{fiber}
510
500

Figure 6

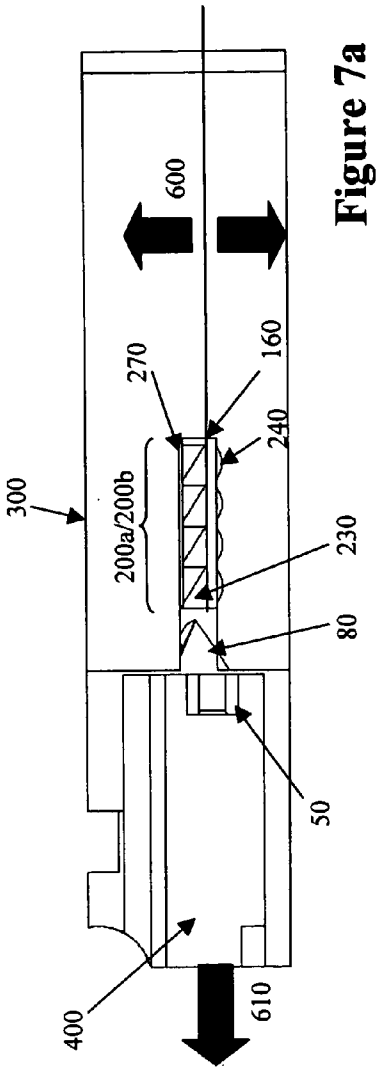

Figure 7a

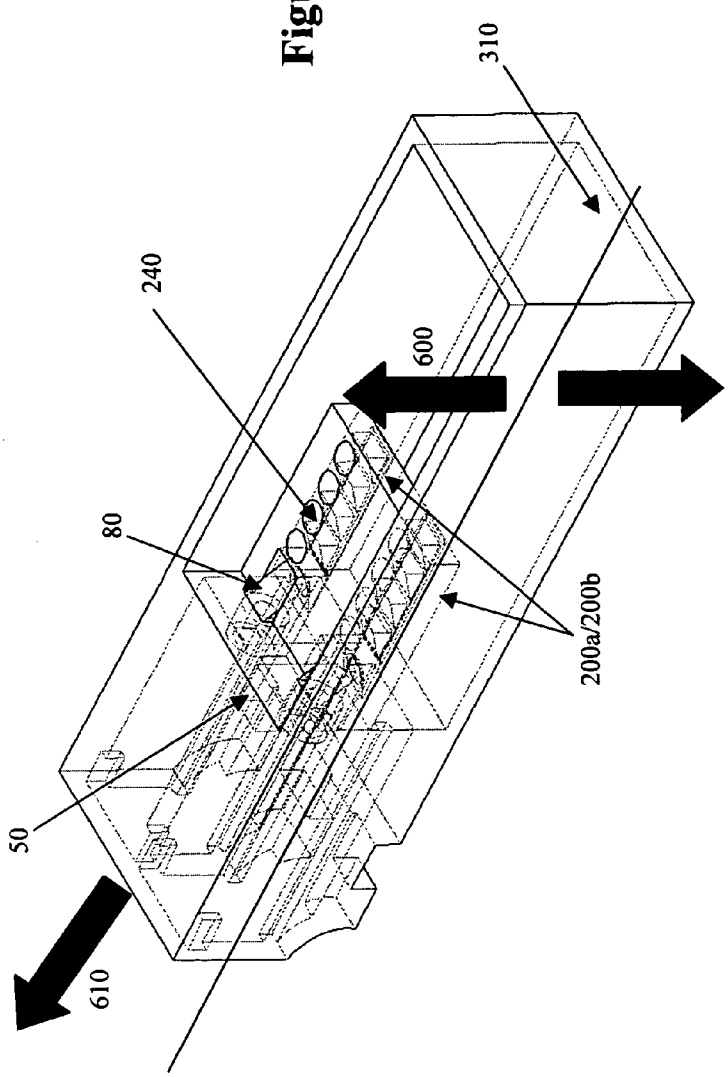

Figure 7b

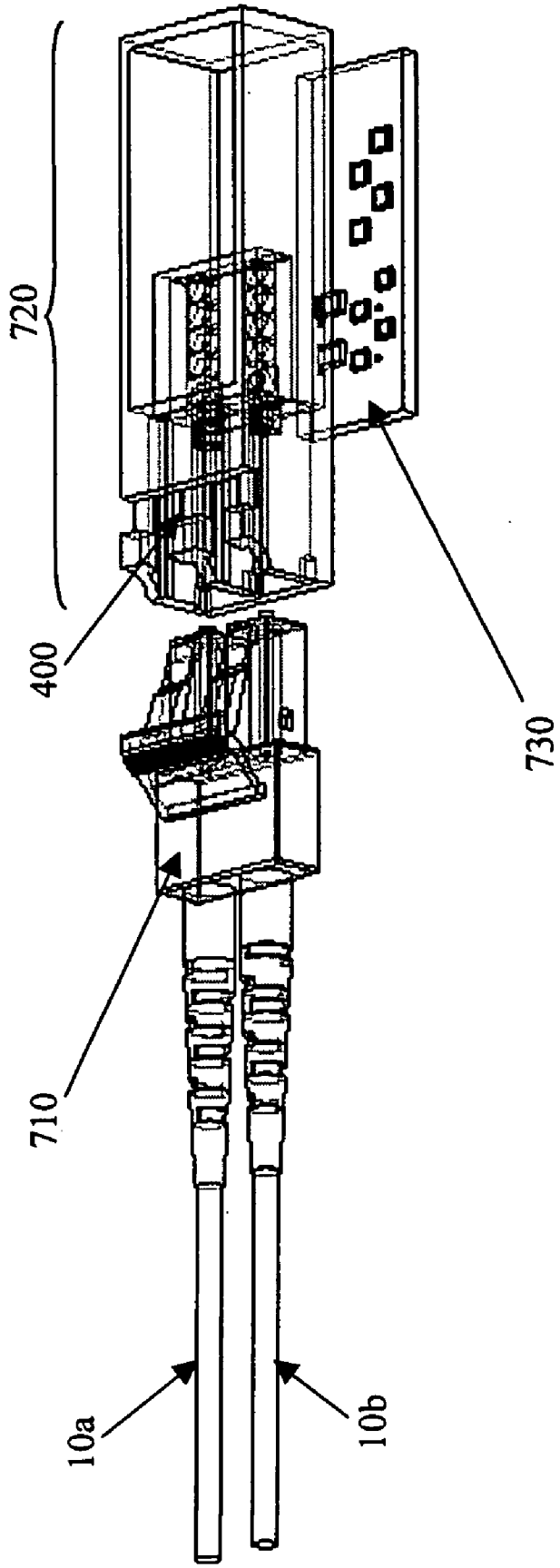

Figure 8

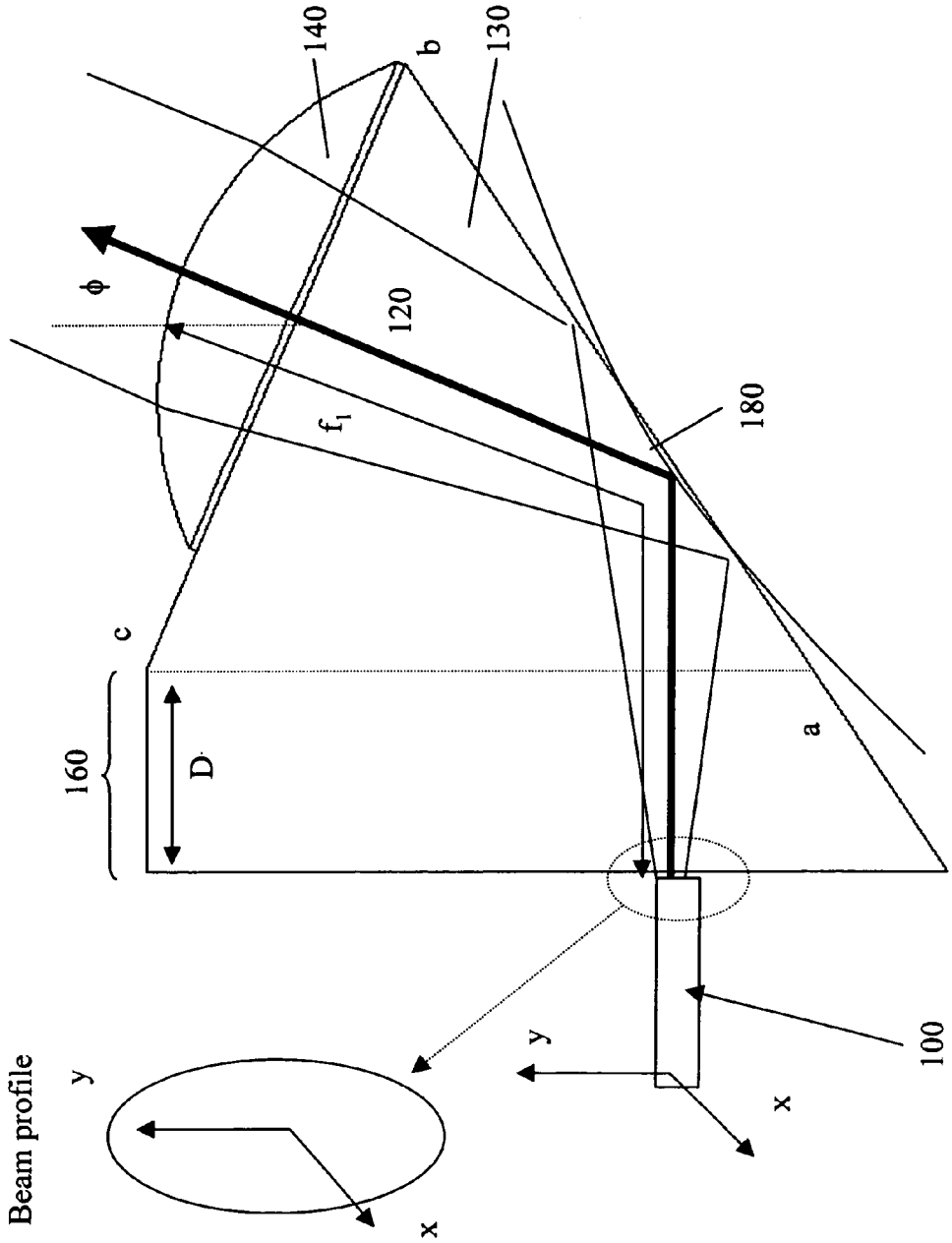

Figure 9

SYSTEM AND METHOD FOR COLLIMATING AND REDIRECTING BEAMS IN A FIBER OPTIC SYSTEM

BACKGROUND OF THE INVENTION

[0001] 1. Field of the Invention

[0002] The present invention relates to optical communications, and more particularly, to a system and method for collimating and redirecting beams in a fiber optic system.

[0003] 2. Discussion of the Related Art

[0004] The integration of aspheric lenses within connectors designed to couple light beams from one optical fiber to another, and manufacturable using injection molding of optically transparent plastic, is well known. These applications generally address the need to maintain alignment between the axis of an optical fiber and a light beam output therefrom. One group of previous known designs describes the placement of a concentric plano-convex lens with the flat side of the lens near or against a fiber core. Another group of known designs is shown in **FIG. 1***a*. This type utilized the placement of plano-convex lens with the flat side away from a fiber core and an air gap cavity separating the lens and the fiber. Shown in **FIG. 1***a* is a cross-sectional view of a prior optical fiber-connector assembly, comprising the integration of an optical fiber **2** having a fiber core **3** with a fiber connector housing **1**. The optical fiber **2** and a collimating lens **7** are positioned so that a cavity **5** is formed between them, with the flat side of the collimating lens **7** being away from the fiber core **3**. As an extension to the design shown in **FIG. 1***a*, the design in **FIG. 1***b* illustrates the use of a wedge **6** to redirect the beam at 45° using total internal reflection (TIR) after the beam is collimated by the collimating lens **7**.

[0005] Similar assemblies designed to couple light directly from a vertical cavity surface emitting laserdiodes (VCSEL) into a multimode fiber and/or couple light from an optical fiber directly onto a photodetector also appear in the prior art. One such assemblies has a design with a concentric TO can ferrule, lens, and fiber ferrule elements. Designs of this nature, applying specifically to coupling between VCSELs and photodiodes mounted inside TO cans and optical fibers, are devised for use in serial data links rather than wavelength division multiplexing (WDM) systems.

[0006] More recent designs involving wavelength division multiplexers (WDM) employing thin film filter (TFF) channel separation and a "zig-zag" configuration may be subdivided into two types of designs. The first type of designs centers around the use of optical waveguides, consisting of regions of high index material (core) surrounded by a lower index material (cladding), to route the light along the "zig-zag" waveguides. The second type of designs involves those designs that depend on collimation and free-space "zig-zag" optical routing. In implementation, the collimation, redirection, and focusing of light relevant to the second type of designs, or the free-space "zig-zag" multiplexer/de-multiplexer designs, differ drastically from the first type of designs, or the waveguide-based solutions. Prior art involving TFF-based wavelength division multiplexers (WDM) that employ a free-space "zig-zag" configuration generally applies to fiber-to-fiber applications such as optical switches, branch filters, and add-drop multiplexers. Most of these designs have a planar topology that is not well suited for current injection molding technology. Therefore, there is a need for a system and method that utilize free-space "zig-zag" optical routing while being suited for current injection molding technology.

[0007] There is little, if any, prior art that describes a design for a TFF-based optical WDM transceiver that uses injection molding of transparent plastic to construct an integrated optical assembly. One example of a related design was presented by B. Wiedemann at the IEEE 802.3ae Interim Meeting in 2000. The input collimator of this design is consistent with the air-gap cavity design mentioned earlier with respect to **FIGS. 1***a* and **1***b*. A serious disadvantage of this design and the designs of **FIGS. 1***a* and **1***b* is the absence of a ferrule to guide the fiber along the axis of a collimating lens. A small shift in fiber position results in a serious misalignment of the collimated beams. If standard injection molding techniques were used to manufacture the design, addition of the ferrule that is necessary to refine the design would be extremely difficult because shaping the lens and ferrule on the same "slide" would generate an undercut condition.

[0008] An additional problem is depicted in **FIG. 2**, which shows that a collimating element of related design consists of a lens surface positioned on a tilted base of refractive material. The diagram suggests that, by design, the chief optical ray of a beam **8** from a point source **4** strikes the surface of a lens **7** near its center and refracts into the refractive material **9** at an angle equal to the tilt angle of the base on which the lens surface is mounted. The tilt angle of the base is used to redirect the chief ray of the beam **8** to the desired angle, while the curvature of the lens **7** is used to collimate the beam **8**. Because the chief ray is deliberately designed to penetrate the surface of the lens **7** off its axis of symmetry, the quality of beam collimation is sacrificed. It is impossible to eliminate aberration in the beam **8** even if aspheric terms are added to the sag equation defining the lens **7**. Aberration is especially great for sources of large numerical aperture, for large tilt angles, and for sources displaced slightly from the optimal position. Therefore, there is a need for a system and method that collimates and redirects beams in a fiber optic system in a more efficient manner.

BRIEF DESCRIPTION OF THE DRAWINGS

[0009] The accompanying drawings, which are incorporated in and form a part of this specification, illustrate embodiments of the present invention and, together with the description, serve to explain the principles of the present invention:

[0010] **FIG. 1***a* illustrates a cross-sectional view of a prior optical fiber-connector assembly;

[0011] **FIG. 1***b* illustrates a cross-sectional view of another prior optical fiber-connector assembly;

[0012] **FIG. 2** illustrates a prior design intended to collimate light from a point source, such as an optical fiber;

[0013] **FIG. 3***a* shows an optical subassembly for redirecting and collimating output from an optical fiber according to an embodiment of the present invention;

[0014] **FIG. 3***b* shows an optical subassembly for redirecting and coupling a collimated beam into an optical fiber according to an embodiment of the present invention;

[0015] **FIG. 4***a* shows an optical subassembly for collimating and redirecting an output beam from a surface emitting laser according to an embodiment of the present invention;

[0016] **FIG. 4***b* shows an optical subassembly for redirecting and coupling a collimated beam into a photodetector according to an embodiment of the present invention;

[0017] **FIGS. 5***a* and **5***b* illustrate schematically designs for a four-channel wavelength division multiplexer/de-multiplexer with a fiber optic input/output according to an embodiment of the present invention;

[0018] **FIG. 6** shows a case where the magnification of an optical system is not equal to one according to an embodiment of the present invention;

[0019] **FIGS. 7***a* and **7***b* show a four channel CWDM transceiver integrated with a connector housing suitable to receive a fiber optic connector according to an embodiment of the present invention;

[0020] **FIG. 8** shows a complete transceiver module in which embodiments of the present invention may function; and

[0021] **FIG. 9** illustrates an optical subassembly for redirecting and collimating output from an edge-emitting laser according to an embodiment of the present invention;

DETAILED DESCRIPTION

[0022] Reference will now be made in detail to the preferred embodiments of the invention, examples of which are illustrated in the accompanying drawings. While the present invention will be described in conjunction with the preferred embodiments, it will be understood that they are not intended to limit the invention to these embodiments. On the contrary, the present invention is intended to cover alternatives, modifications and equivalents, which may be included within the spirit and scope of the invention as defined by the appended claims. Moreover, in the following detailed description of the present invention, numerous specific details are set forth in order to provide a thorough understanding of the present invention. However, the invention may be practiced without these specific details. In other instances, well-known methods, procedures, and components have not been described in detail as not to unnecessarily obscure aspects of the present invention.

[0023] Embodiments of the present invention are directed to addressing the aforementioned drawbacks associated with collimating and redirecting beams in a fiber optic system. An embodiment of the present invention is directed to a fiber collimator for redirecting and collimating a light beam from an optical source input. The fiber collimator comprises a prism with a triangular wedge element having a first surface, a second surface and a base, a ferrule to guide the optical source input so as to contact the optical source input with the first surface of the prism, and an aspheric lens integrated on the second surface. The integrated aspheric lens is positioned so that a chief ray of the light beam passes directly through the axis of the aspheric lens. The prism serves to redirect the beam at an angle relative to an axis of the optical source input, with the base of the triangle wedge element redirecting the light beam by total internal reflection (TIR). The aspheric lens then serves to collimate the redirected light beam.

[0024] In one embodiment, the present invention is further directed to a fiber coupler for redirecting and coupling a light beam into an optical fiber core of an optical fiber. The fiber coupler comprises a prism, an aspheric lens and a ferrule similar to those in the fiber collimator. The aspheric lens receives a light beam, and is positioned so that the light beam is focused after passing through the aspheric lens, creating a focal spot image. The base of the triangle wedge element of the prism serves to redirect the focused light beam by total internal reflection (TIR) at an angle relative to an axis of the optical fiber, the focused light beam becoming coupled into the optical fiber core. The ferrule guides the optical fiber so as to contact the optical fiber core with the first surface of the prism at or near the location of the focal spot image.

[0025] Embodiments of the invention are also directed to a collimating optical subassembly and a focusing optical subassembly. Both are fabricated of optically transparent material and integrated as a single part using injection-molding techniques. The former is for collimating and redirecting a divergent light beam from a point source; it comprises an aspheric lens, a spacer element and a wedge element. The aspheric lens receives and collimates a divergent light beam, creating a collimated light beam. The spacer element is positioned above the aspheric lens, and the wedge element is positioned above the spacer element. The wedge element refracts the collimated light beam into air at an angle relative to the axis of the aspheric lens consistent with Snell's law. On the other hand, the focusing optical subassembly is for redirecting and focusing a collimated light beam. The focusing optical subassembly comprises a wedge element, a spacer element and an aspheric lens. The wedge element receives a collimated light beam from outside. The spacer element is positioned below the wedge element, and the aspheric lens is positioned below the spacer element. The collimated light beam received by the wedge element travels in air at an angle relative to an axis of the aspheric lens. The wedge element redirects a chief ray of the collimated beam through the spacer element along the axis of the aspheric lens. The aspheric lens focuses the collimated light beam to a point along its axis.

[0026] Another embodiment of the present invention is directed to a transceiver comprising alignment ferrules for optical fibers, a fiber connector housing, and a ledge to precisely control the planar orientation of a printed circuit board. Using a combination of aspheric lenses and prisms, and in particular, the fiber coupler, the fiber collimator, the collimating optical subassembly and the focusing optical subassembly, the transceiver is able to collimate and route light from two or more VCSELs or edge-emitting lasers through a "zig-zag" configuration as well as to redirect and focus the combined light onto the core of a single optical fiber. Moreover, collimating and routing light from a single optical fiber, having multiple wavelength components, through a free-space "zig-zag" configuration and redirecting and focusing the light at each individual wavelength onto a different photodetector are achieved.

[0027] The WDM transceiver module described herein is paraxial by design, using aspheric lenses to compensate for spherical aberration, and optically optimized for alignment tolerances of the laser sources and photodetectors. This is done by adjusting the optical focal lengths of the lenses to magnify or de-magnify the image of the laser source (trans-

mitter) or fiber core (receiver) on the respective image plane. Appropriate magnification may be used to increase the tolerance of the optical system to misalignment of the laser sources and/or photodetectors, and/or to match the numerical aperture of the laser source to that of the optical fiber into which the light is coupled. This optimization maximizes the overall alignment tolerance of the optical subassembly with the substrate on which the lasers and photodetectors are attached, and/or the coupling efficiency of the lasers to the optical fiber. This optimization technique, the specific layout of fiber ferrules, prisms and lenses integrated as one part with the ledge to aid in positioning on a printed circuit board are enabling features for mass production of low-cost WDM transceivers using current state-of-the-art optical-quality injection molding techniques.

[0028] According to a further embodiment of the present invention, a mold assembly for fabricating an integrated optical assembly as a single injection-molded part is provided. The mold assembly comprises first and second mold halves and a single slider. The first and second mold halves are arranged to mate with each other, forming a draw direction oriented parallel to axes of aspheric lenses of a focusing optical subassembly of an optical de-multiplexer and a collimating optical subassembly of an optical multiplexer. The single slider is used to form ferrules for a fiber collimator of the optical de-multiplexer and a fiber coupler of the optical multiplexer as well as to form the connector housing. The first mold half is used to shape wedges of the collimating and focusing optical subassemblies and to shape aspheric lenses of the fiber collimator and the fiber coupler. The second mold half is used to shape total internal reflection surfaces of the fiber collimator and the fiber coupler and to shape the aspheric lenses of the collimating and focusing subassemblies.

[0029] Reference in the specification to "one embodiment" or "an embodiment" of the present invention means that a particular feature, structure or characteristic described in connection with the embodiment is included in at least one embodiment of the present invention. Thus, the appearances of the phrase "in one embodiment" appearing in various places throughout the specification are not necessarily all referring to the same embodiment.

[0030] Embodiments of the present invention are directed to systems and methods for collimating and redirecting beams in an optical system. In general, the present invention is applicable whenever light from a point source—e.g., laser, optical fiber—needs to be collimated, directed off-axis, and refocused to form an image of the source with good quality and carefully controlled position, size and numerical aperture. The present invention is also applicable when the alignment tolerance of the source and the image relative to the optical system needs to be optimized. For example, embodiments of the present invention are utilized in a wavelength division multiplexing (WDM) system to multiplex and de-multiplex several wavelengths/channels of light, wherein WDM transceiver modules are optically optimized for the alignment tolerance of the laser sources and photodetectors. The optimization maximizes the overall alignment tolerance of the optical subassembly with the substrate on which the lasers and photodetectors are attached. This technique, along with the specific layout of prisms and lenses, are enabling features for mass production of optical subassemblies and free-space coupled WDM transceiver modules.

[0031] With reference now to **FIG. 3***a*, an optical subassembly **100***a* according to an embodiment of the present invention is provided. In the embodiment, the optical subassembly **100***a* is a fiber collimator that is designed to redirect and collimate an output of a divergent light beam **20** from an optical fiber **10**, creating a collimated output **25**. The optical subassembly **100***a* comprises a prism **30**, an aspheric lens **40** and an alignment ferrule **50**. The optical fiber **10** directs the divergent light beam **20** into the optical subassembly. Prior to collimation, the prism **30**, having an index of refraction n, is used to redirect the divergent light beam **20** at a specific angle (ϕ) relative to the axis normal to the incoming optical axis using total internal reflection (TIR). TIR results as divergent light beam **20** hits a TIR surface **80** of the prism **30**. In one implementation, the angle ϕ must satisfy the following condition:

$$2\arcsin(1/n)-\pi/2<\phi<\pi/2$$

[0032] The prism **30** may, for example, be made of polycarbonate because of its highly transparent characteristic, with the index of refraction n being approximately 1.57. If this case, the angle ϕ must be greater than −10.87 degrees.

[0033] As shown in **FIG. 3***a*, the prism **30** has a spacer element **60**, having a length D. The length D of the spacer is defined in such a way that the folded optical path of light passing through the aspheric lens **40** places the focus of the lens **40** at or near the input wall of the prism **30**. The spacer element **60** is an important feature to the design of the optical subassembly **100***a*, enabling convenient tuning of the focal length and numerical aperture in this portion of an optical system while maintaining a well-defined focal plane, which is important for alignment purposes. However, it should be apparent to one in the art that depending on the specific arrangement of the optical fiber **10** and the structures of optical subassemblies in accordance with other embodiments of the present invention, the spacer element **60** may not be needed.

[0034] According to an embodiment of the present invention, the alignment ferrule **50** is attached to the prism **30** to ensure that the optical fiber **10** is optimally aligned to the prism **30**. As shown in **FIG. 3***a*, this alignment is defined by having the chief ray from the fiber propagate directly along the axis of symmetry of the lens **40**. In one embodiment, this is ensured by the geometry of the prism **30**, designed such that an isosceles triangle ("abc") wedge is provided. Here, the isosceles triangle abc is symmetric about the vertex "c", i.e., the length of side ca is equal to the length of side cb. The isosceles triangle abc wedge is provided to ensure that the chief ray enters and exits the optical subassembly **100***a* at a normal incidence. This preserves the independence of the angles of the isosceles triangle abc on the choice of refractive material used to construct the optical subassembly. Used in conjunction with the spacer element **60**, the isosceles triangle abc wedge can be kept at a constant dimension, while the spacer element **60** provides a means for adjusting the optical path length from the optical fiber **10** to the aspheric lens **40**. This allows the focal length of the lens **40**, and thereby the radius of the collimated beam **25**, to be adjusted while keeping the dimensions of the isosceles triangle abc wedge constant. In other embodiments, other types of triangular shaped wedge may be used.

[0035] In one implementation, the optical subassembly **100***a*, consisting of the alignment ferrule **50**, the prism **30** and the aspheric lens **40**, is manufactured as one part, thereby minimizing alignment inaccuracy. The prism **30**, the aspheric lens **40** and the alignment ferrule **50** may be made by a standard injection molding process using, for example, polycarbonate, polyolefin, or polyethylimide. On one hand, polycarbonate is often used because of its high transparency. On the other hand, polyethylimide is often used because of its high temperature operating characteristic and low coefficient of thermal expansion (CTE).

[0036] The optical subassembly described above can naturally be operated in reverse to redirect and focus a collimated beam into an optical fiber. **FIG. 3***b* illustrates an optical subassembly **100***b* for redirecting and coupling collimated beam into an optical fiber according to an embodiment of the present invention. In the embodiment, the optical subassembly **100***b* is a fiber coupler created for redirecting and focusing a collimated beam **25'** whose chief ray enters along the axis of symmetry of an aspheric lens **40**. The focal length of the lens **40** is designed to produce an image spot with a numerical aperture matching the numerical aperture of an optical fiber **10**. The prism **30** is utilized to redirect a convergent light beam **20'**, which is formed from the collimated beam **25'** passing through the aspheric lens **40** and redirected by a TIR surface **80**. An alignment ferrule **50** and a spacer element **60** are used to precisely position the optical fiber **10** at the focus of the optical subassembly **100***b*.

[0037] **FIG. 4***a* illustrates an optical subassembly **200***a* for collimating and redirecting an output beam from a surface emitting laser according to an embodiment of the present invention. The optical subassembly **200***a* comprises a prism **230**, an aspheric lens **240**, and a spacer **260** positioned in between the prism **230** and the aspheric lens **240**. In one embodiment, the optical subassembly **200***a* is used for collimating and redirecting an output beam from a vertical cavity surface-emitting laser (VCSEL) **250**. Examples of the laser sources of interest for this application includes, but are not limited to, VCSELs emitting in the 850 nm band, VCSELs emitting in the 980 nm band, and VCSELs currently in development at the 1300 nm band. In contrast to the prior art design shown in **FIG. 2, a** non-tilt aspheric lens **240** is used to collimate the output beam from the VCSEL **250**, while a flat, tilted surface **235** of the prism **230** is used to redirect the collimated beam to a desired angle. This effectively uncouples the two separate tasks of redirection and collimating in the present design, making the design "paraxial," i.e., the beam falls on the refracting surface close to and almost parallel to the axis. The absence of tilt in the aspheric lens **240** and the addition of a second, flat surface **235** to perform the function of redirecting the beam are key differences between the present invention and prior designs. This significantly improves the collimated beam quality, enabling the output beam to remain well collimated even for a source having a large divergence angle and/or significant offsets in the position of the source. The result is a greatly improved tolerance to misalignment.

[0038] Like the optical subassembly **100***a* described in **FIG. 3***a*, the optical subassembly **200***a* shown in **FIG. 4***a*, can be used in reverse to redirect and focus a collimated beam. **FIG. 4***b* illustrates an example of such an optical subassembly **200***b*. A collimated beam is incident to a flat, tilted surface **235** of the prism **230** at a specific angle. The optical subassembly **200***b*, being paraxial in nature, makes use of the flat, tilted surface **235** to redirect the collimated beam and an aspheric lens **240** to focus the beam. This results in a diffraction-limited image being focused onto a photodetector **210**. Since photodetectors utilized for high-speed optical modulation typically have small active area, efforts to minimize the size of the image are important to maximize both the optical energy detected and the tolerance to detector misalignment. With the paraxial optical subassembly **200***b*, the size of the image is minimized at the photodetector **210**. Typically, a spacer **260** is provided between the aspheric lens **240** and the prism **230**. One of the functions of the spacer **260** is to allow molten optically transparent material to easily flow through a mold for fabricating the optical subassembly **200***a* and/or the optical subassembly **200***b* during injection molding manufacturing processes.

[0039] **FIG. 5***a* and **FIG. 5***b* illustrate schematically designs for a four-channel wavelength division multiplexer/de-multiplexer with a fiber optic input/out according to embodiments of the present invention. The four-channel wavelength division multiplexer/de-multiplexer uses thin film filters (TFFs) in a "zig-zag" scheme to perform channel separation. **FIG. 5***a* depicts an optical demultiplexer, or a receiver, that consists an optical subassembly **100***a* as depicted in **FIG. 3***a*, a glass plate **300**, a set of TFFs **270***a*-**270***d* and a set of focusing optical subassemblies **200***b* as depicted **FIG. 4***b*. With the prism **30** and aspheric lens **40**, the optical subassembly **100***a*, or the fiber collimator, redirects and collimates a divergent beam from an optical fiber **10** at a specific angle relative to normal to the input axis of the optical fiber **10**. In the embodiment, the light beam contains multiple wavelengths, and four focusing optical subassemblies **200***b* and four TTFs **270***a*-**270***d* are provided. From the optical subassembly **100***a*, the collimated, multichromatic beam refracts into the glass plate **300**, which has a high refractive (HR) coated surface **310** for reflecting the beam. The HR coated surface **310** is coated with a broadband high reflective (HR) coating, and it is coated on the side opposite to the side from with the beam enters. The bandwidth of the HR coating includes all the wavelengths to be de-multiplexed. The input angle of the collimated beam is controlled to allow the collimated beam to reflect back-and-forth within the glass plate **300** with a specific spacing d. This is determined by the angle of a TIR surface of the prism **30**, the refractive index of the glass plate **300**, the refractive index of the TFF substrates **270***a*-**270***d*, and the thickness of both the glass plate **300** and the TFF substrates **270***a*-**270***d*.

[0040] In the embodiment, each of four TFFs **270***a*-**270***d* is highly reflective over the same bandwidth as the above-described HR coating surface **310** on the glass plate **300**, except within a narrow passband centered at one of the four wavelengths that comprise the input beam. The passband of the TFFs **270***a*-**270***d* should be wide enough to allow for laser wavelength drift with temperature, manufacturing error, etc. The center wavelengths should be spaced sufficiently far apart, so that negligible overlap exists among the passbands of the TFFs **270***a*-**270***d*. The width of each of the TFFs **270***a*-**270***d* used in the embodiment of the present invention shown in **FIGS. 5***a* and **5***b* may, for example, be 10-15 nm and the spacing may, for example, be 20-25 nm. Further, the design of the multi-layer dielectric structure, used to construct passbands of the TFFs **270***a*-**270***d* employed in the embodiment, is optimized for the specific

angle of incidence expected for the "zig-zag" scheme. This optimization minimizes any variation in reflection and transmission due to the polarization state of the incident light.

[0041] In one embodiment, the TFFs **270***a*-**270***d* are course wavelength division multiplexing (CWDM) filters, or so-called wide wavelength division multiplexing (WWDM) filters, that are used in a CWDM system. In other embodiments, the TFFs **270***a*-**270***d* are dense wavelength division multiplexing (DWDM) filters, that are used in a DWDM system, where light at different wavelengths is closely packed. In one implementation, the substrate of each TFFs **270***a*-**270***d* is composed of the same refractive material as the glass plate **300**. In other implementations, the TFFs **270***a*-**270***d* and the glass plate **300** have different refractive indexes. In **FIGS. 5***a* and **5***b*, each of the TFFs **270***a*-**270***d* is positioned such that its bandpass coating faces away from the glass plate **300**. However, the bandpass coating may be placed in contact with the glass plate **300** in other embodiments. In one implementation, an index matching epoxy may be used to attach the set of TFF substrates **270***a*-**270***d* to the glass plate **300**.

[0042] In operation, a wavelength component of the collimated beam is shown to propagate back-and-forth within the glass plate **300** of the optical demultiplexer of **FIG. 5***a*. The propagation ends when the collimated beam is incident onto a particular TFF with a bandpass coating that allows the particular wavelength component to pass. As illustrated in **FIG. 5***a*, the TTF **270***a* is the particular TTF for a particular wavelength component. After passing through TFF **270***a*, the wavelength component passes through a focusing optical subassembly and is focused onto a photodetector **210**. The photodetector **210** may, for example, be a photodiode. Although not shown for sack of clarity, each of the other wavelength components (not shown) in the input beam passes through a different TFF and is directed and focused onto a different photodetector (not shown). Preferably, a photodetector is positioned beneath each aspheric lens **240** to detect the wavelength component passing therethrough.

[0043] **FIG. 5***b* depicts a four-channel wavelength optical multiplexer according to an embodiment of the present invention. Light from any one of VCSELs **250** is first collimated, then redirected into a "zig-zag" optical path, and finally coupled into an optical fiber **10**. The VCSELs **250** are mounted on a line below the multiplexer. Use of several VCSELs and TFFs having non-overlapping passbands, each centered at the emitting wavelength of its corresponding VCSEL, enables the design of a wavelength division optical multiplexer (WDM). One VCSEL is positioned beneath each aspheric lens to introduce its light beam into the WDM system. For sack of clarity, only one light beam and one VCSEL are shown. The light beam emitted from a VCSEL **250** passes through its corresponding optical assemblies **200***a*, like the one described in **FIG. 4***a*. The light is collimated by the aspheric lens **240** and redirected by the prism **230** into the glass plate **300**. Upon entering the glass plate **300**, the light beam passes through the TFF **270***a*. Light beams from other VCSELs enter the glass plate **300** in a similar fashion. Since the TFFs **270***a*-**270***d* have non-overlapping passbands, different wavelength components are extracted from the light beams. Inside the glass plate **300**, light with different wavelength components travels in a "zig-zag" optical path while being reflected by the HR coating **310** and the TFFs **270***a*-**270***d*. After leaving the glass plate **300**, the light with different wavelength components are coupled into an optical fiber **10** by an optical subassembly **100***b*, like the one described in **FIG. 3***b*.

[0044] Of importance to the transceiver design depicted in **FIG. 5***a* and **FIG. 5***b* is the alignment of the VCSELs **250** and photodetector apertures **210** to their corresponding aspheric lenses **240**. Misalignment often results because of the manufacturing tolerances of optical subassemblies and/or glass plates, thermal expansion, placement accuracy of a die bonder used to position the VCSEL **250** and photodetector **240**, etc. Efforts to maximize the amount of light coupled into the optical fiber **10** despite any misalignment of the VCSEL **250**, and/or to maximize the amount of light incident onto the photodetector **210** despite any misalignment of the photodetector **210**, are necessary to make the transceiver design more readily manufactured. In the present invention, several design features are specifically utilized for this purpose. For example, to ensure an optimally collimated beam, despite small variation in the position of the VCSEL **250** in **FIG. 4***a*, the aperture of the aspheric lens **240** is made larger than the waist of the output beam, that is

$$R>f_2\tan(\sin^{-1}(NA/n)),$$

[0045] where R is the aperture of the aspheric lens **240** and f_2 is the focal length of the aspheric lens **240**. The lens parameters for the aspheric lens **40** in **FIG. 3***b* are optimized by assuming a source with a numerical aperture (NA) that completely fills the full aperture of the lens, given by the following expression:

$$NA=n\ \sin(\tan^{-1}(R/f_1)).$$

[0046] This ensures that the image of the source remains undistorted even if the source is displaced from its optimal position. When the VCSEL **250** is displaced, the undistorted, diffraction-limited image, whose size is proportional to the size of the source, simply translates in the image plane an amount proportional to the displacement of the source. The constant of proportionality for both size and displacement is the magnification of the entire optical system, given by the ratio of the focal lengthy of the optical subassembly **100***b* and the focal length f_2 of the optical subassembly **200***a*. Similar arrangements and analysis apply to optical subassemblies depicted in **FIGS. 4***b* and **3***a*. If the focal length of the aspheric lens **40** and the aspheric lens **240** are equal, for example, the laser source from the VCSEL **250** is imaged at actual size onto the fiber core of the transmitter fiber **10**, and the fiber core of the receiver is imaged at actual size onto the photodetector **210**. The image in each case moves one micron for every micron of source displacement.

[0047] **FIG. 6** shows a general case, where the magnification of the optical system is not equal to one, i.e., the laser source or the fiber core is not imaged at actual size. If the VCSEL **250**, or the laser source, is displaced from its ideal position by a distance X_{source}, then the image **510** of the VCSEL aperture on the fiber core **500** moves a distance $X_{source}\ f_1/f_2$. Approximately half the power (i.e. 3 dB) is lost in the transmitter when $X_{source}\ f_1/f_2=D_{fiber}/2$, where D_{fiber} is the diameter of the optical fiber. The alignment tolerance for placing the laser source is, therefore, $X_{source\ 3dB}\approx D_{fiber}\ f_2/2f_1$.It would be desirable to minimize the magnification in order to maximize the alignment tolerance; however, the choice of magnification also impacts the numerical aperture (NA) of the source image projected onto the fiber core. It is undesirable to project an image to the fiber core with a NA

larger than that of the fiber because light will be lost. The NA, NA_{source}, of the source image and the NA, NA_{fiber}, of the image projected onto the fiber core are related through the following expression:

$$NA_{fiber}=NA_{source}f_2/f_1$$

[0048] Because of this, the minimum desirable magnification is given by

$$f_1/f_2=NA_{source}/NA_{fiber}.$$

[0049] The alignment tolerance of the source in this case becomes $X_{source\ 3dB}\approx D_{fiber}NA_{fiber}/2NA_{source}$. In one implementation of the present invention, this constraint is used when designing the prescription for the lens **40** in the optical subassembly **100***b* used to couple collimated light into the optical fiber **10** and the lens **240** in the optical subassembly **200***a* used to collimate the light from the VCSEL **250**. For example, a typical 50 micron diameter multimode fiber having a NA near 0.2, and a typical VCSEL, having a NA near 0.26, suggests a magnification near 1.3. This translates into an alignment tolerance of ±20 microns for the VCSEL **250**.

[0050] **FIGS. 7***a* and **7***b* show perspective views of a four-wavelength CWDM transceiver integrated with a housing suitable for receiving a duplex fiber optic connector according to an embodiment of the present invention. **FIG. 7***a* is a cross-sectional view of the four-wavelength CWDM transceiver with the housing, and **FIG. 7***b* is a perspective view of the four-wavelength CWDM transceiver with the housing looking from the bottom of the transceiver. The assembly/device shown in **FIGS. 7***a* and **7***b* consists of at least one of the optical subassemblies **200***a*, **200***b* described in **FIG. 5***a* and **FIG. 5***b*, respectively, integrated with a connector housing **400** suitable to receive a duplex fiber connector or any other fiber optic connector. Shown in **FIG. 7***a* are slots used for accurately placing TTFs **270** over the optical subassemblies **200***a* or **200***b*. These slots are created at a distance equal to or substantially equal to the TFF substrate thickness. The square cavity directly above the prism/lens components, and above the TFFs **270**, is where the HR coated glass plate **300** is positioned. In a preferred implementation, the assembly depicted in **FIG. 7***a* and **FIG. 7***b* is manufactured as a single part, using plastic (e.g. polycarbonate or polyethylimide) injection-molding techniques. In these techniques, plates containing cavities where plastic will ultimately reside are brought together along a "direction of draw," which is designated by reference numeral **600**. This forms a closed mold. One or more "sliders," designated by reference numeral **610**, manufactured with surface shapes relevant to the plastic part of interest, may be inserted into the closed mold along axes other than that of the draw direction **600**. Mold inserts for optical surfaces may be manufactured separately using high precision, diamond-tip machining techniques and inset into the rest of the mold. Once the complete volume is defined, molten plastic is injected through one or more gates, with the) pressure of the plastic displacing the air in the cavity out through one or more vents. Once the plastic part cools, the sliders **610** retract and the plates separate. The part is then ejected and the cycle repeats.

[0051] While the design rules for manufacturing molds suitable for plastic injection molding are well known, special care is required to design a single-piece WDM transceiver mold with the optical functionality described in **FIG. 5***a* and/or **FIG. 5***b*. Shown in **FIGS. 7***a* and **7***b*, the lens and prism surfaces in the preferred implementation of the present invention are easily cast using only the two mold faces that meet along the direction of draw **600**. A single "slider" surface is used to cast the inside of the connector housing, including the alignment ferrule **50** used to guide the optical fiber. Diamond-turned inserts are, for example, used to define all optical quality surfaces including the lenses **40**, prisms **30**, and TIR surfaces **80**. In addition, a plastic spacer **260** is, illustratively, placed between the redirecting prisms **230** and the aspheric lenses **240**. The spacer **260** is included to provide, as one of its functions, an adequate flow channel for the molten plastic.

[0052] **FIG. 8** shows a complete transceiver module according to an embodiment of the present invention. The complete transceiver module includes a dual fiber optic connector **710**, an injection-molded optical assembly **720**, a printed circuit board (PCB) **730**, and a metal shield for minimizing electromagnetic interference (not shown). Optical fibers **10***a*, **10***b* are connected to the dual fiber connector **710**. One optical fiber in the dual connector **710** is for the receiver, and the other one is for the transmitter. As described, the optical assembly **720** is preferably a one-piece injection-molded optical subassembly with a connector housing **400**. The dual fiber connector **710** slides into the connector housing **400**. The PCB **730** is aligned with the one-piece injection-molded optical subassembly in the optical assembly **720**. On the PCB **730**, there are laser sources, photodetectors, chips for processing electrical signals, other circuitry, etc. To aid the alignment, a ledge structure is provided in a plane parallel to the plane tangential to, and passing through, the apex of the aspheric lenses of the collimating and optical subassemblies in the optical assembly **720**. The ledge structure allows the PCB **730** to be inserted and to be parallel to the aspheric lenses within a few microns of tolerance.

[0053] While the preferred implementation of the present invention utilizes a VCSEL as the optical source for each wavelength in the WDM transmitter, an edge-emitting laser (EEL) may alternatively be used. **FIG. 9** illustrates an optical subassembly, and more particularly, a collimating element useful for redirecting and collimating output from an EEL **100** according to an embodiment of the present invention. Similar to the optical subassembly **100***a* depicted in **FIG. 3***a*, the collimating element comprises an aspheric lens **140** and a prism **130** with a spacer **160**. The divergent light beam **120** from the EEL **100** is redirected at a specific angle, ϕ, relative to normal to the optical axis of the EEL **100** by TIR using a prism **130**. The divergent beam **120** is then collimated using an aspheric lens **140**.

[0054] The light beam **120** from the EEL **100** diverges faster along one axis than along the other. This is true for both Fabry-Perot (FP) type EELs and distributed feedback (DFB) type EELs. As a result, light from an EEL collimated by a simple lens produces an elliptical beam profile. In one implementation of the present invention, as shown in **FIG. 9, a** TIR surface **180** may be shaped so that it acts as a cylindrical lens. The TIR surface **180** can speed up the divergence of a slower axis and/or slow down the divergence of a faster axis. In the embodiment, the aspheric lens **140** may be toric, having a different focal length along each axis. The resultant beam, defined by the NA of the EEL **100**, the TIR surface **180** and the aspheric lens **140** along each axis,

may be designed to collimate both axes simultaneously while producing a beam of arbitrary ellipticity. In this case, the NA of the TIR surface **180** is flat along one axis and defined by a specific sag equation along the other, and the NA of the aspheric lens **140** is defined by a different sag equation along each axis. In other embodiments, the desired beam profile is circular or nearly circular.

[**0055**] An optical multiplexer based on optical subassemblies described in **FIG. 3***a* and **FIG. 9** may also be constructed, enabling the use of EELs as source lasers rather than VCSELs. The design is similar to that shown in **FIG. 5***b*. In an alternative embodiment, the angle of the output beam in the "xy" plane defined in **FIG. 9** may be controlled by rotating the TIR surface **180** about the "z" axis to any angle desired. When a rotation with $\phi=0°$ is implemented, the EELs emit in a direction orthogonal to the direction of the "zig-zag" scheme.

[**0056**] While the foregoing description refers to particular embodiments of the present invention, it will be understood that the particular embodiments have been presented for purposes of illustration and description. They are not intended to be exhaustive or to limit the invention to the precise forms disclosed. Many modifications and variations are possible in light of the above teachings and may be made without departing from the spirit thereof The accompanying claims are intended to cover such modifications as would fall within the true scope and spirit of the present invention. The presently disclosed embodiments are therefore to be considered in all respects as illustrative and not restrictive, the scope of the invention being indicated by the appended claims, rather than the foregoing description, and all changes which come within the meaning and range of equivalency of the claims are therefore intended to be embraced therein.

What is claimed is:

1. A connector to an optical fiber, comprising:

a prism that includes a triangular wedge element having a first surface, a second surface and a base;

a ferrule to guide the optical fiber so as to contact the optical fiber with the first surface of the prism, the first surface being substantially perpendicular to the optical fiber; and

an aspheric lens integrated on the second surface, the integrated aspheric lens being positioned so that the prism serves to redirect a light beam at an angle relative to an axis of the optical source input through total internal reflection by utilizing the base of the triangle wedge element, the aspheric lens serving to at least one of collimate the redirected light beam and focus the light beam before being redirected.

2. The connector of claim 1, wherein the connector is a fiber collimator.

3. The connector of claim 1, wherein the connector is a fiber coupler.

4. A fiber collimator, comprising:

a prism that includes a triangular wedge element having a first surface, a second surface and a base;

a ferrule to guide an optical source input to the fiber collimator so as to contact the optical source input with the first surface of the prism, the first surface being substantially perpendicular to the optical source input; and

an aspheric lens integrated on the second surface, the integrated aspheric lens being positioned so that the prism serves to redirect a light beam at an angle relative to an axis of the optical source input, and the aspheric lens serves to collimate the redirected light beam, the base of the triangle wedge element redirecting the light beam by total internal reflection (TIR).

5. The fiber collimator of claim 4, wherein the triangular wedge element is an isosceles triangle wedge, the length of the first surface being equal to the length of the second surface.

6. The fiber collimator of claim 4, wherein the prism further comprises a spacer element, the spacer element providing a mechanism to adjust an optical path length from the aspheric lens to the optical source input, allowing the focal length of the aspheric lens, and thereby the radius of the collimated light beam, to be adjusted while keeping the dimensions of the triangle wedge element constant.

7. The fiber collimator of claim 4, wherein diamond-turned inserts are utilized to define optical quality surfaces, including those for at least one of the prism, the aspheric lens and the TIR surface.

8. A fiber coupler, comprising:

a prism that includes a triangular wedge element having a first surface, a second surface and a base;

an aspheric lens integrated on the second surface, the integrated aspheric lens receiving a light beam, the aspheric lens being positioned so that the light beam is focused after passing through the aspheric lens, creating a focal spot image; and

a ferrule to guide an optical fiber of the fiber coupler so as to contact an optical fiber core of the optical fiber with the first surface of the prism at or near the location of the focal spot image, wherein the base of the triangle wedge element serves to redirect the focused light beam by total internal reflection (TIR) at an angle relative to an axis of the optical fiber, the focused light beam being directed into the optical fiber core.

9. The fiber coupler of claim 8, wherein the triangular wedge element is an isosceles triangle wedge, the length of the first surface being equal to the length of the second surface.

10. The fiber coupler of claim 8, wherein the prism further comprises a spacer element, the spacer element providing a mechanism to adjust an optical path length from the aspheric lens to the optical fiber, allowing the focal length of the aspheric lens, and thereby the numerical aperture of the light delivered to the optical fiber, to be adjusted while keeping the dimensions of the triangle wedge element constant.

11. The fiber coupler of claim 8, wherein the light beam received by the aspheric lens is an elliptically shaped, collimated light beam and the focal spot imaged onto the fiber core is circular or substantially circular, the base of the triangle wedge element having curvature to enable this TIR surface to act as a cylindrical mirror, the aspheric lens being toric with its principle axes aligned with those of the cylindrically curved TIR surface, the combination of the cylindrically curved TIR surface and the toric aspheric lens

serving to collimate and correct for spherical aberrations and rendering the focal spot imaged onto the fiber core circular or substantially circular.

12. The fiber coupler of claim 8 wherein the lens parameters for the aspheric lens is optimized by utilizing a source with a numerical aperture that completely fills the full aperture of the lens.

13. A collimating element, comprising:

a prism that includes a triangular wedge element having a first surface, a second surface and a base, the base of the triangle wedge element having curvature to enable it to act as a cylindrical mirror to redirect the light beam by total internal reflection; and

an aspheric lens integrated on the second surface, the aspheric lens being toric with principle axes aligned with those of the cylindrically curved base of the triangle wedge element, the integrated aspheric lens being positioned so that a chief ray of the light beam passes directly through the axis of the aspheric lens, wherein the light beam from an optical source input is an elliptically shaped beam, the elliptically shaped beam being redirected at an angle relative to an axis of the optical source input by the cylindrically curved base, the redirected light beam being collimated by the aspheric lens, the collimated light beam being a circularly or substantially circularly shaped beam, wherein the aspheric lens serves to collimate the redirected light beam, the base of the triangle wedge element redirecting the light beam by total internal reflection.

14. The collimating element of claim 13, wherein the optical source input is an edge-emitting laser.

15. A collimating optical subassembly for collimating and redirecting a divergent light beam from a point source, comprising:

an aspheric lens that receives and collimates the divergent light beam, creating a collimated light beam;

a spacer element above the aspheric lens; and

a wedge element that refracts the collimated light beam into air at an angle relative to the axis of the aspheric lens consistent with Snell's law, the wedge element being positioned above the spacer element, wherein the collimating optical subassembly is fabricated of optically transparent material and integrated as a single part using injection-molding techniques.

16. The collimating optical subassembly of claim 15, wherein the point source is a vertical cavity surface emitting laserdiode.

17. The collimating optical subassembly of claim 15, wherein the spacer element is inserted to allow molten optically transparent material to more easily flow through a mold for fabricating the collimating optical subassembly using standard injection molding techniques.

18. The collimating optical subassembly of claim 15, wherein the prism is made of an optically transparent material, the optically transparent material including any one of polycarbonate, polyolefin and polyethylimide.

19. The collimating optical subassembly of claim 15, wherein the aperture of the aspheric lens is made larger than the waist of collimated light beam outputted from the wedge element.

20. A focusing optical subassembly for redirecting and focusing a collimated light beam, comprising:

a wedge element that receives the collimated light beam traveling in air;

a spacer element below the wedge element; and

an aspheric lens below the spacer element, wherein the focusing optical subassembly is fabricated of optically transparent material and integrated as a single part using injection-molding techniques, and wherein the collimated light beam received by the wedge element travels in air at an angle relative to an axis of the aspheric lens, the wedge element redirecting a chief ray of the collimated beam through the spacer element along the axis of the aspheric lens, the aspheric lens focusing the collimated light beam to a point along its axis.

21. The focusing optical subassembly of claim 20, wherein a photodetector resides at the point to which the collimated light beam is focused by the aspheric lens.

22. The focusing optical subassembly of claim 20, wherein the spacer element is inserted to allow molten optically transparent material to more easily flow through a mold for fabricating the focusing optical subassembly using standard injection molding techniques.

23. An integrated optical assembly, comprising:

a fiber collimator that redirects and collimates a light beam from an optical source input, creating a collimated light beam;

at least two focusing optical subassemblies, the at least two focusing optical subassemblies being aligned along a common axis; and

an optically transparent block that receives the collimated light beam from the fiber collimator, the optically transparent block having a top side coated to act as a reflective mirror and a bottom side including thin film filters (TFFs), each with a different passband wavelength and each being positioned over each focusing optical subassembly, the top side being the side opposite to at least one of the fiber collimator and the focusing optical subassemblies,

wherein the collimated light beam travels in a zig-zag fashion within the optically transparent block, wavelength components of the collimated light beam being separated from each other by the TFFs with matching passband wavelengths and focused by the focusing optical subassemblies below the TFFs.

24. The integrated optical assembly of claim 23, further comprising

a connector housing that receives a fiber optical connector; and

a ledge structure adapted for positioning a printed circuit board, the printed circuit board being parallel to, and at a distance from, aspheric lenses of the focusing optical subassemblies when positioned in the ledge structure.

25. The integrated optical assembly of claim 24, wherein the integrated optical assembly is manufactured using injection molding of an optically transparent plastic.

26. The integrated optical assembly of claim 24, further comprising an optical multiplexer, wherein the connector housing designed to receive a duplex optical fiber, and the printed circuit board being also parallel to, and at a distance

from, aspheric lenses of collimating optical subassemblies of the optical multiplexer when positioned in the ledge structure.

27. The integrated optical assembly of claim 26, wherein the integrated optical assembly is manufactured using injection molding of an optically transparent plastic.

28. The integrated optical assembly of claim 26, wherein the set of aspheric lenses belonging to the focusing optical subassemblies have a different prescription than the set of aspheric lenses belonging to the collimating optical subassemblies, and an array of photodetectors and an array of point sources reside on the printed circuit board having different heights.

29. An optical multiplexer of a zig-zag design, comprising:

a fiber coupler that redirects and couples a light beam with different wavelength components into an optical fiber;

at least two collimating optical subassemblies receiving light beams from different point sources, the at least two collimating optical subassemblies being aligned along a common axis;

an optically transparent block that receives light beams with different wavelength components, the optically transparent block having a top side coated to act as a reflective mirror and a bottom side including thin film filters (TFFs), each with a different passband wavelength and each being positioned over each collimating optical subassembly, the top side being the side opposite to at least one of the fiber coupler and the collimating optical subassemblies, wherein light beams from the point sources travel through the collimating optical subassemblies, the TTFs, the optically transparent block and the fiber coupler into the optical fiber.

30. The optical multiplexer of claim 29, wherein aspheric lenses for collimating and focusing a light beam diverging from one of the point sources having a particular sized aperture are used to project an image from the point source onto the fiber core with a controlled degree of magnification, which controls the sized aperture of the light beam delivered to the optical fiber and the resulting coupling efficiency.

31. The optical multiplexer of claim 29, wherein aspheric lenses for collimating and focusing a light beam diverging from one of the point sources having a particular sized aperture are used to project an image from the point source onto the fiber core with a controlled degree of magnification, which controls the tolerance of the coupling efficiency into the optical fiber to a displacement of the point source.

32. A mold assembly for fabricating an integrated optical assembly as a single injection-molded part, the integrated optical assembly including a connector housing, an optical de-multiplexer and an optical multiplexer, the mold assembly comprising:

first and second mold halves arranged to mate with each other, forming a draw direction oriented parallel to axes of aspheric lenses of a focusing optical subassembly of the optical de-multiplexer and a collimating optical subassembly of the optical multiplexer, and

a single slider used to form ferrules for a fiber collimator of the optical de-multiplexer and a fiber coupler of the optical multiplexer as well as to form the connector housing, wherein the first mold half is used to shape wedges of the collimating and focusing optical subassemblies and to shape aspheric lenses of the fiber collimator and the fiber coupler, and the second mold half is used to shape total internal reflection surfaces of the fiber collimator and the fiber coupler and to shape the aspheric lenses of the collimating and focusing subassemblies.

33. The mold assembly of claim 32, wherein spacers are interested to allow molten plastic to flow through the mold assembly during manufacturing of the integrated optical assembly as a single injection-molded part.

34. The mold assembly of claim 32, wherein the mold assembly provides a ledge structure to be molded in the single injection-molded part, the ledge structure existing in a plane parallel to the plane tangential to and passing through the apex of each of the aspheric lenses of the collimating and focusing optical subassemblies, the ledge structure allowing a printed circuit board, on which arrays of point sources and photodetectors are mounted, to be inserted and to be parallel, within a few microns of tolerance, to the aspheric lenses of the collimating and focusing optical subassemblies.

35. An integrated optical subassembly, comprising:

a fiber coupler that redirects and couples a light beam with different wavelength components into an optical fiber;

at least two collimating elements that receives elliptically divergent light beams from edge-emitting lasers, the at least two collimating elements being aligned along a common axis and spaced so that the elliptically divergent light beams become redirected and collimated into circular or nearly circular light beams;

an optically transparent block that receives the circular or nearly circular light beams with different wavelength components, the optically transparent block having a top side coated to act as a reflective mirror and a bottom side including thin film filters (TFFs), each with a different passband wavelength and each being positioned over each collimating element, the top side being the side opposite to at least one of the fiber coupler and the collimating optical subassemblies, wherein the circular or nearly circular light beams travel through the TTFs, the optically transparent block and the fiber coupler into the optical fiber.

36. The integrated optical assembly of claim 35, further comprising

a connector housing that receives a fiber optical connector; and a ledge structure suitable for positioning a printed circuit board, the printed circuit board being parallel to, and at a distance from, aspheric lenses of the collimating elements when positioned in the ledge structure.

37. The integrated optical assembly of claim 36, further comprising an optical de-multiplexer, the connector housing designed to receive a duplex optical fiber; and the printed circuit board being also parallel to, and at a distance from, aspheric lenses of focusing optical subassemblies of the optical de-multiplexer when positioned in the ledge structure.

38. The integrated optical assembly of claim 37, wherein the integrated optical assembly is manufactured using injection molding of an optically transparent plastic.

* * * * *