UNITED STATES PATENT AND TRADEMARK OFFICE

BEFORE THE PATENT TRIAL AND APPEAL BOARD

NRG ENERGY, INC.
TALEN ENERGY CORPORATION, and
VISTRA ENERGY Corp.
Petitioners

v.

MIDWEST ENERGY EMISSIONS CORP.
Patent Owner

Case IPR2020-00926
Patent 8,168,147

PATENT OWNER MIDWEST ENERGY EMISSION CORP.'S PRELIMINARY RESPONSE

Mail Stop "PATENT BOARD"
Patent Trial and Appeal Board
U.S. Patent and Trademark Office
P.O. Box 1450
Alexandria, VA 22313-1450

TABLE OF CONTENTS

I. Introduction.....1

II. Preliminary Statement Regarding the Challenged Claims.....1

III. The Board Should Exercise its Discretion to Deny Institution. 2

A. The Board Should Deny Institution under 35 U.S.C. § 325(d).....2

1. Applicable Law.....2

2. Analysis.....4

a) *Becton Dickinson* factors (a), (b), (d): The Same or Substantially the Same Arguments Were Previously Presented to the Patent Office. 4

b) *Becton Dickinson* Factors (c), (e), (f): Petitioner Has Failed to Demonstrate that the Examiner Committed Material Error. 8

3. Conclusion 9

B. The Board Should Deny Institution under 35 U.S.C. § 312(a)(2). 9

IV. Summary of the Technology 11

A. Background of the Patented Technology 11

B. Development of the '147 Technology.....13

V. Claim Construction.....14

VI. Petitioners Have Not Demonstrated a Reasonable Likelihood of Prevailing on the Merits. 19

A. All Asserted Grounds: Petitioners Fail to Prove that Nelson, Lissianski-Patent, and Downs-Halogenation Qualify as Prior Art.....19

1. Applicable Law.....20

2. Factual Background 23

a) Prelude to the '147 Invention 24

b) Conception of the '147 Patent. 26

c) Reduction to Practice of the ’147 Patent. 27

3. Analysis.....32

a) Petitioners Fail to Qualify Downs-Boiler as Prior Art. 32

b) Petitioners Fail to Qualify Lissianski-Patent as Prior Art. 34

c) Petitioners Fail to Qualify Nelson as Prior Art. 38

B. Ground 1: Petitioners Fail to Prove Obviousness in Light of Nelson.....40

C. Ground 2: Petitioners Fail to Prove that a POSITA Would Combine Nelson with Lissianski-Patent. 41

VII. ARGUMENT FROM IPR2020-00928: The ’147 Patent Is Entitled to the Earliest Asserted Filing Date 43

IV. Claim Construction.....44

V. Applicable Law Related to Patent Priority 46

A. Legal Standard for Patent Priority.....46

B. Petitioners Bear the Burden of Persuasion with Respect to a Disputed Priority Date.....48

VI. Petitioners Have Failed to Show that ’147 Patent Claims 18 and 19 Are Not Entitled to the Earliest Claimed Priority Date.....49

A. The Provisional Application Supports ’147 Claims 18 and 19.....50

B. Petitioners Misinterpret the Provisional Application.....54

C. The ’163 and ’595 Applications Support the ’147 Claims. .....

VII. Conclusion 60

TABLE OF AUTHORITIES

Cases

Advanced Bionics LLC v. MED-EL Elektromedizinische Gerate GmbH
IPR2019-01469, Paper 6 (Feb. 13, 2020).....3, 4

Agrinomix, LLC v. Mitchell Ellis Prod., Inc.
No. IPR2017-00525, 2017 WL 2590164 (P.T.A.B. June 14, 2017).....9

Argentum Pharm. LLC v. Alcon Research, Ltd.
No. IPR2017-01053, 2018 WL 4565052 (P.T.A.B. Sept. 20, 2018).....42

Ariad Pharm., Inc. v. Eli Lilly & Co.
598 F.3d 1336 (Fed. Cir. 2010)..... 46, 47

ATI Techs. ULC v. Iancu
920 F.3d 1362 (Fed. Cir. 2019)..... 37, 40

Becton, Dickinson & Co. v. B. Braun Melsungen AG
IPR2017-01586, Paper 8 (Dec. 15, 2017)..... 3, 4, 8

Blue Calypso, LLC v. Groupon, Inc.
815 F.3d 1331 (Fed. Cir. 2016).....48

Boart Longyear Ltd. v. Australian Mud Co. Pty Ltd.
No. IPR2019-01129, 2019 WL 6442439 (P.T.A.B. Nov. 25, 2019).....49

Cooper v. Goldfarb
154 F.3d 1321 (Fed. Cir. 1998)..... 22, 23

Dynamic Drinkware, LLC v. Nat'l Graphics, Inc.
800 F.3d 1375 (Fed. Cir. 2015)..... 20, 48, 49

E.I. du Pont De Nemours & Company v. Unifrax I LLC
921 F.3d 1060 (2019)..... 22, 36

Fleming v. Escort Inc.
774 F.3d 1371 (Fed. Cir. 2014).....23

Fox Factory, Inc., v. Sram, LLC
No. PGR2016-00043, 2017 WL 1242973 (P.T.A.B. Apr. 3, 2017).....47

Freebit AS v. Bose Corp.
No. IPR2017-01308, 2017 WL 5202106 (PTAB Nov. 8, 2017) 20, 23

Gillette Co. v. Energizer Holdings, Inc.
405 F.3d 1367 (Fed. Cir. 2005) 45

Harmonic Inc. v. Avid Tech., Inc.
815 F.3d 1356 (Fed. Cir. 2016) 2

In re Magnum Oil Tools Int'l, Ltd.
829 F.3d 1364 (Fed. Cir. 2016) 50

In re Rasmussen
650 F.2d 1212 (CCPA 1981).....47

In re Spiller
500 F.2d 1170 (C.C.P.A.1974).....35

In re Steed
802 F.3d 1311 (Fed. Cir. 2015) 21

LizardTech. Inc. v. Earth Res. Mapping, Inc.
424 F.3d 1336 (Fed. Cir. 2005) 47, 48

Mahurkar v. C.R. Bard, Inc.
79 F.3d 1572 (Fed. Cir. 1996) 20

Massachusetts Eye & Ear Infirmary v. Novartis Ophthalmics, Inc.
199 F. App'x 960 (Fed. Cir. 2006) 36

Mazzari v. Rogan
323 F.3d 1000 (Fed. Cir. 2003) 21

Monsanto Co. v. Mycogen Plant Science, Inc.
261 F.3d 1356 (Fed. Cir. 2001) 21

Nalpropion Pharm., Inc. v. Actavis Labs. FL, Inc.
934 F.3d 1344 (Fed. Cir. 2019) 46

Neil Ziegman, N.P.Z., Inc. v. Stephens
Case IPR2015-01860, Paper 11 (PTAB Feb. 24, 2016).....2

NFC Tech., LLC v. Matal
871 F.3d 1367 (Fed. Cir. 2017) 21, 22

Perfect Surgical Techniques, Inc. v. Olympus Am., Inc.
841 F.3d 1004 (Fed. Cir. 2016) 21, 22, 37

Phillips v. AWH Corp.
415 F.3d 1303 (Fed. Cir. 2005) 14

ScriptPro LLC v. Innovation Associates, Inc.
833 F.3d 1336 (Fed. Cir. 2016) 47

Streck, Inc. v. Research & Diagnostic Sys., Inc.
659 F.3d 1186 (Fed. Cir. 2011) 21

Tech. Licensing Corp. v. Videotek, Inc.
545 F.3d 1316 (Fed.Cir.2008) 49

Trs. of Columbia Univ. v. Symantec Corp.
811 F.3d 1359 (Fed. Cir. 2016) 15

Tyco Healthcare Grp. v. Ethicon Endo-Surgery, Inc.
774 F.3d 968 (Fed. Cir. 2014) 21

Vas–Cath Inc. v. Mahurkar
935 F.2d 1555 (Fed. Cir. 1991) 46

Vitronics Corp. v. Conceptronic, Inc.
90 F.3d 1576 (Fed. Cir. 1996) 14

Statutes

35 U.S.C. § 312(a)(2) 9, 11

35 U.S.C. § 315 10

35 U.S.C. § 316(e) 20, 48

35 U.S.C. § 325(d) 2, 3

35 U.S.C. 112(a) 46

Other Authorities

MPEP § 715.02 35

MPEP 211.05 46

MPEP 2138.01(II) (example 3).....21

Exhibit List	
No.	**Exhibit**
2001	*Pro Hac Vice* Declaration
2002	EPA Clean Air Act Overview, https://www.epa.gov/clean-air-act-overview/1990-clean-air-act-amendment-summary-title-iii
2003	EPA, Mercury Study Report to Congress Vol. I (1997)
2004	EPA, Study of Hazardous Air Pollutant Emissions from Electric Utility Steam Generating Units -- Final Report to Congress (1998)
2005	EERC internal presentation, "Description of Test Facilities Particulate Test Combustor"
2006	EERC internal presentation, "Mercury Control Technologies for Electric Utilities Burning Lignite Coals, Introduction to Project" (12/4/2001)
2007	EERC internal presentation, "Mercury Control Technologies for Electric Utilities Burning Lignite Coals Project Kickoff Meeting" part 1 (2/28/2002)
2008	EERC internal presentation, "Mercury Control Technologies for Electric Utilities Burning Lignite Coals Project Kickoff Meeting" part 2 (2/28/2002)
2009	EERC internal presentation, "Mercury Control Technologies for Electric Utilities Burning Lignite Coals, Project Review Meeting" (2/25/2003)
2010	"JV TASK 45 – MERCURY CONTROL TECHNOLOGIES FOR ELECTRIC UTILITIES BURNING LIGNITE COAL, PHASE I BENCH- AND PILOT-SCALE TESTING Final Report" (Oct. 2003) (the "Oct. 2003 Report")
2011	"PILOT- AND FULL-SCALE DEMONSTRATION OF ADVANCED MERCURY CONTROL TECHNOLOGIES FOR LIGNITE-FIRED POWER PLANTS," (Feb. 2004) (the "Feb. 2004 Report")
2012	"PILOT- AND FULL-SCALE DEMONSTRATION OF ADVANCED MERCURY CONTROL TECHNOLOGIES FOR LIGNITE-FIRED POWER PLANTS – Final Report," (Feb. 2005) (the "Feb. 2005 Report")
2013	MERCURY CONTROL TECHNOLOGIES FOR ELECTRIC UTILITIES BURNING SUBBITUMINOUS COALS - Final Report" (Oct. 2005) (the "Oct. 2005 Report")
2014	Notes on Center for Air Toxic Metals (CATM) 2003 Research Ideas
2015	Metadata for Notes on Center for Air Toxic Metals (CATM) 2003 Research Ideas
2016	Declaration of Thomas Erickson including PTC logbook entries

2017	https://www.midwestemissions.com/sea-technology
2018	EPA Capsule Report "Particulate Control by Fabric Filtration on Coal-Fired Industrial Boilers
2019	E. Ravert, "Precoating new filters for better airflow, longer filter life"
2020	EPA Course SI:412 Baghouse Plan Review
2021	EPA, Air Pollution Control Technology Fact Sheet – Fabric Filter
2022	EPA, Mercury and Air Toxics Standards, https://www.epa.gov/mats/cleaner-power-plants
2023	DOE, Success Story for Sorbent Enhancement Additives
2024	Declarations of Inventors
2025	Press Release, "Midwest Energy Emissions Corp. and Vistra Announce Fleetwide License and Supply Agreement."
2026	U.S. Patent No. 5,435,980 ("Felsvang")
2027	Sidney Nelson, "How China Can Leapfrog the World in Mercury Emission Reduction"
2028	File History of U.S. Patent Application No. 15/978,760 (issued as U.S. Patent No. 10,343,114) ("'114 Patent File History")

I. Introduction

U.S. Patent No. 8,168,147 ("the '147 Patent") describe methods of capturing mercury from coal-fired power plant exhaust. In particular, it describes the "in-flight" treatment of activated carbon sorbent using a bromine additive. Patent Owner has practiced this technology for years, including with respect to one of the former-petitioners in this proceeding. *See* Ex. 2025, press release, "Midwest Energy Emissions Corp. and Vistra Announce Fleetwide License and Supply Agreement."

The remaining petitioners allege obviousness based on invalidity theories that were rejected by the Patent Office, and references that post-date the invention date for this patent. Accordingly, Patent Owner respectfully requests that the Board deny institution.

II. Preliminary Statement Regarding the Challenged Claims

Much of the present petition is moot. Before this petition was filed, ME2C statutorily disclaimed the non-"in-flight" claims of the '147 patent (1-16 and 21-25). *See* Ex. 1019 at 494. Thus, the remaining asserted grounds are limited to:

Ground	'147 Claims	Basis for Challenge
1.	17, 20	Obvious over Nelson Ex[1012] and Olson-Paper Ex[1079]
2.	17-20	Obvious over Nelson, Olson-Paper, and Lissianski-Patent Ex[1036]
4.	17-20	Obvious over Downs-Halogenation Ex[1015], Olson-Paper, and Lissianski-Patent

III. The Board Should Exercise its Discretion to Deny Institution.

A. The Board Should Deny Institution under 35 U.S.C. § 325(d).

Institution of an *inter partes* review is discretionary. *See Harmonic Inc. v. Avid Tech., Inc.*, 815 F.3d 1356, 1367 (Fed. Cir. 2016) (explaining that under § 314(a), "the PTO is permitted, but never compelled, to institute an IPR proceeding"). "While petitioners may have sound reasons for raising art or arguments similar to those previously considered by the Office, the Board weighs petitioners' desires to be heard against the interests of patent owners, who seek to avoid harassment and enjoy quiet title to their rights." *See Neil Ziegman, N.P.Z., Inc. v. Stephens*, Case IPR2015-01860, Paper 11 at 12–13 (PTAB Feb. 24, 2016). Because the primary reference relied upon by Petitioners was addressed during prosecution, the Board should deny institution.

1. Applicable Law

Section 325(d) provides that the Director may elect not to institute a proceeding if the challenge to the patent is based on arguments previously presented to the office. 35 U.S.C. § 325(d). In particular, the Board uses the following two-part framework before instituting a petition: (1) it determines whether the same or substantially the same art or arguments were previously presented to the Office; and (2) if so, then it determines whether the petitioner has

demonstrated that the Office "erred in a manner material to the patentability of challenged claims." *Advanced Bionics LLC v. MED-EL Elektromedizinische Gerate GmbH*, IPR2019-01469, Paper 6 (Feb. 13, 2020) (precedential). "If reasonable minds can disagree regarding the purported treatment of the art or arguments, it cannot be said that the Office erred in a manner material to patentability. At bottom, this framework reflects a commitment to defer to previous Office evaluations of the evidence of record unless material error is shown." *Id.*

The Board has identified the following non-exclusive factors in evaluating whether to exercise discretion pursuant to § 325(d):

> (a) the similarities and material differences between the asserted art and the prior art involved during examination; (b) the cumulative nature of the asserted art and the prior art evaluated during examination; (c) the extent to which the asserted art was evaluated during examination, including whether the prior art was the basis for rejection; (d) the extent of the overlap between the arguments made during examination and the manner in which Petitioner relies on the prior art or Patent Owner distinguishes the prior art; (e) whether Petitioner has pointed out sufficiently how the Examiner erred in its evaluation of the asserted prior art; and (f) the extent to which additional evidence and facts presented in the Petition warrant reconsideration of the prior art or arguments.

Becton, Dickinson & Co. v. B. Braun Melsungen AG, IPR2017-01586, Paper 8 (Dec. 15, 2017) (precedential as to § III.C.5, first paragraph) ("*Becton Dickinson*"). The Board has further explained that, although these factors refer to prior examination and previously presented art, they are meant to "more broadly provide

guidance" as to whether art or arguments were previously presented in any proceeding. *Advanced Bionics* at 10. It has also clarified that factors (a), (b), and (d) relate to the first portion of the framework, and the remaining factors relate to the second portion of the framework. *Id.*

2. Analysis

a) *Becton Dickinson* factors (a), (b), (d): The Same or Substantially the Same Arguments Were Previously Presented to the Patent Office.

Petitioners rely on Nelson as a primary reference. This reference has been extensively considered by the Patent Office, including in combination with a reference that described the use of separate halogen injection. Petitioners have failed to show that the Board should once again litigate this reference.

During the prosecution of U.S. Patent No. 10,343,114,[1] the examiner had initially rejected the claim below:

> 2. A method of separating mercury from a mercury-containing gas, the method comprising:
> combusting coal in a combustion chamber, to provide the mercury-containing gas, wherein the mercury-containing gas comprises a halogen or halide promoter comprising Br2, HBr, Br-, or a combination thereof;
> injecting a sorbent material comprising activated carbon into the mercury-containing gas downstream of the combustion chamber such that the activated carbon reacts with the halogen or halide promoter in the mercury-containing gas to form a promoted sorbent;

[1] Petitioners have requested *inter partes* review of this patent. *See* IPR2020-832, IPR2020-834.

> reacting mercury in the mercury-containing gas with the promoted sorbent, to form a mercury/sorbent composition;
>
> separating the mercury/sorbent composition from the mercury-containing gas, to form a cleaned gas;
>
> monitoring the mercury content of the cleaned gas; and
>
> controlling, in response to the monitored mercury content of the cleaned gas, an injection rate of injecting the sorbent into the mercury-containing gas, the sorbent composition, or a combination thereof so that the mercury content of the cleaned gas is maintained at or below a desired level.

Ex. 2028 at 1645. Similar to the '147 claims, this claim requires combining bromine and sorbent for mercury capture. The examiner's rejection was based on Nelson, which discloses pre-treated brominated sorbent, and U.S. Patent No. 5,435,980 ("Felsvang" Ex. 2026) which describes applying chlorine to coal. According to the Examiner:

> It would have been obvious to one having ordinary skill before the invention was made to have modified the Felsvang et al. reference to either replace the Cl with or include in addition to the halogen or halide promoter comprising HBr, Br-, or a combination thereof to promote activated carbon (Nelson paragraphs [0017] and [0041]) so as to provide an effective carbon sorbent for mercury.

Ex. 2028 at 1696. This argument is nearly identical to Petitioners' current proposal of combining Nelson with Lissianski-Patent. For example, Petitioners propose that Lissianski-Patent's description of injecting chlorine additive into flue gas would motivate a POSITA to combine Nelson's sorbent with injected halogen. While Lissianski-Patent also briefly mentions bromine as a potential oxidizing agent

based on a computer model, Lissianski-Patent provides no teaching that injecting bromine would provide improved results as compared to Nelson's description of pre-treated sorbent.

In response to the examiner's rejection, the applicant submitted the following response:

> As an initial matter, while Felsvang does mention supplying chloride to coal and providing activated carbon in flue gas, Felsvang does not teach that this process promotes the activated carbon. The Examiner fails to identify any teaching in the art that exposure of activated carbon to halogen- or halide-containing flue gas (as opposed to, e.g., concentrated halogen or halide gas) would generate a promoted sorbent, as opposed to, for example, the activated carbon and the halogen or halide in the flue gas providing independent, albeit complementary, mechanisms for mercury removal. For example, a person with a cold may expect aspirin and a decongestant to work well together at reducing symptoms, but that does not mean that taking the two compounds together will cause an additional beneficial chemical reaction.
>
> [. . .]
>
> [Moreover,] as the Examiner acknowledges, the Nelson reference does not teach in-flight promotion in the flue gas as a way to create a promoted sorbent, nor does Nelson teach adding any chemical to the flue gas would improve mercury removal. Quite the contrary, Nelson describes pre-treating sorbent (i.e., outside of flue gas) as an "essential element" of his invention. He offers specific reasons as to why pretreatment was viewed as essential. For example, he notes that bromine species can be "quite corrosive," the carbon should be "uniformly exposed to and reacted with the bromine," the carbon should be purged of H2O which interferes with bromination, and he describes a mixing time for HBr and activated carbon of 90 minutes or more. As explained more fully below, a person of ordinary skill in the art would recognize that the combustor and flue gas ductwork are composed of corrodible metal, the concentration of halogen in the flue gas would be low, the flue gas would contain significant H20 (e.g., 7%

> as per Nelson), and that in-flight mixing would allow for only several seconds of contact time between the activated carbon and the promoter rather than 90 minutes. Thus, Nelson would motivate a person of ordinary skill in the art to promote sorbents in a controlled setting outside of a flue gas, not to attempt in-flight promotion in a flue gas. At the very least, Examiner has not shown that a person of ordinary skill in the art would be motivated to modify Felsvang in view of Nelson.

Ex. 2028 at 1827-28. These arguments were supported with extensive evidence. *Id.* at 1775- 1904. Applicant also submitted objective evidence of non-obviousness. *Id.* at 1818-1819, 1897-1898. It explained that the inventor's approach for in-flight promotion of sorbent was initially met with skepticism only to be later accepted as a superior technology. For example, it explained that Sydney Nelson (inventor of the Nelson reference) initially sold brominated sorbents and touted this technology. In a presentation entitled "How China Can Leapfrog the World in Mercury Emission Reduction," he noted that pre-treated sorbents were accepted in the U.S. Ex. 2027 at 10. However, he recommended that Chinese operators should instead use in-flight sorbent enhancement in the flue gas. *Id.* at 16, 24. As his basis for proposing that new approach, he did not cite his own research or some commonly understood reference or theory from the early 2000s. Rather, he relied on data collected by inventor John Pavlish and his colleagues at the EERC. *Id.* at 20 (citing Benson, EERC, Richardson, URS, et al., "Large-Scale Mercury Control Technology Testing for Lignite-Fired Utilities –

Oxidation Systems for Wet FGD," DOE NETL Hg Control R&D Program Review, 2006).

The examiner found this evidence persuasive, as indicated in the reason for allowance:

> For Claims 2-19 and 22-28, as shown within the declarations, in-flight promotion with HBr or Br promotors is more effective for mercury removal than treating the sorbent with HBr, Br or Br2 outside the mercury-containing gas. Further, the Nelson reference seems to teach away from inflight promotion as it states that the bromide is extremely corrosive. Lastly, one having ordinary skill in the art would not have looked to in-flight promotion because for the prior art the contact time between the bromine promoter and the activated carbon is about 15 min, while when the promoter is contacted with the activated carbon in-flight, the contact time is generally less than 10 s.

Ex. 2028 at 1927-28. Thus, the same examiner that examined the '147 claims also determined that similar claims were distinguishable over Nelson, and Nelson combined with a reference similar to Lissianski-Patent.

b) *Becton Dickinson* Factors (c), (e), (f): Petitioner Has Failed to Demonstrate that the Examiner Committed Material Error.

Petitioners fail to identify any error in the examiner's conduct described above. Accordingly, they have failed to demonstrate that this petition should be

instituted, at least with regard to grounds 1 and 2 that rely on Nelson or Nelson combined with Lissianski-Patent.[2]

3. Conclusion

Because the Patent Office has already considered arguments substantially similar to those raised with respect to grounds 1 and 2, and because Petitioners have identified no error in that analysis, the Board should defer to that prior analysis and decline institution on those grounds. If the Board is inclined to consider the additional asserted ground (i.e., the Downs-Halogenation grounds), the Board should find that Petitioners have failed to demonstrate a reasonable likelihood of success with respect to those grounds for the reasons provided below. *See Agrinomix, LLC v. Mitchell Ellis Prod., Inc.*, No. IPR2017-00525, 2017 WL 2590164, at *4 (P.T.A.B. June 14, 2017) (denying institution as to some grounds based on § 325(d), and based on the merits as to other grounds).

B. The Board Should Deny Institution under 35 U.S.C. § 312(a)(2).

35 U.S.C. § 312(a)(2) provides that a petition may only be considered if "the petition identifies all real parties in interest." This Petition lists dozens of "potential real parties in interest," without explanation as to their relationship to

[2] Petitioners also propose combining those references with Olson, but they do not contend that that reference teaches the use of bromine to promote activated carbon sorbent "in-flight."

petitioners. This is not an identification of *all real parties in interest*. The Board should not engage in *Inter Partes* Review under such a cloud of uncertainty.

This ambiguous response will likely lead to confusion and disputes as to which parties are real parties in interest and which are bound by the estoppel provisions of 35 U.S.C. § 315. For example, Petitioners identify various "vendors and suppliers with regards to certain allegedly infringing components at issue in the Delaware Litigation" as "potential real parties in interest." With respect to these entities, Petitioners state: "None of these companies or any unnamed entity is funding, controlling, or directing, or otherwise has an opportunity to control or direct this Petition or proceeding." Thus, Petitioners imply that the believe these entities are not actually real parties in interest. However, Petitioners also identify dozens more potential real parties in interest without explanation. Do they also contend that these named entities are not real parties in interest? Given that petitioners contend that no un-named entities are funding controlling, or directing the proceeding, are any of these later named entities doing so?

This problem is compounded by the fact that some entities are identified both as "potential real parties in interest" and actual "real parties in interest." For example, the Petition indicates that Chem-Mod LLC is not "funding, controlling, or directing" the proceeding. Pet. at 2. However, Petitioner NRG identifies Chem-Mod LLC as a real party in interest, and merely states that no "un-named entity is

funding, controlling, or directing" the proceeding. Pet. at 6. § 312(a)(2) requires more than an ambiguous and conflicting listing of entities, which may or may not be hiding additional real parties in interest.

Whether for tactical reasons, or simply because they did not do the work to clarify the relationships between these various entities, Petitioners have not met their burden of identifying all real parties in interest. Because *Inter Partes* Review is a discretionary procedure and the Board expects a high degree of preparedness from Petitioners, the Board should deny institution for failure to comply with § 312(a)(2).

IV. Summary of the Technology

A. Background of the Patented Technology

The background story for the '147 patent begins with the Clean Air Act Amendments of 1990. That law required the U.S. Environmental Protection Agency (EPA) to study the environmental and health effects of toxic metals, and to devise regulations for reducing those metals, including mercury. To assist in the research, in 1992, the EPA established a National Center for Excellence at the Energy & Environmental Research Center (EERC) referred to as the Center for Air Toxic Metals (CATM). The EERC's research focused heavily on developing new methods for detecting, measuring, and ultimately, removing mercury from coal-fired power plant exhaust gas. Ex. 2024, Pavlish Decl. at ¶¶ 8-10.

By 1990, the EPA already had significant experience regulating power plant emissions. Since the 1970s, coal-burning power plants had been required to install equipment for controlling acid gas and particulate matter emissions. The industry had developed a number of technologies to address those requirements such as electrostatic precipitators, fabric filters, and scrubbers. However, those systems were not designed to capture mercury. Ex. 2002, EPA, Clean Air Act Overview. By 1998, the EPA found that no existing technologies were up to the task of significantly reducing the mercury emissions from the country's coal plant fleet. Ex. 2004, EPA, "Study of Hazardous Air Pollutant Emissions from Electric Utility Steam Generating Units -- Final Report to Congress" at ES-19 ("Regarding potential methods for reducing mercury emissions, the EPA has not identified any demonstrated add-on control technologies currently in use in the U.S. that effectively remove mercury from utility emissions.")

In the wake of the EPA's conclusion, various governmental and industry organizations injected millions of dollars into basic scientific research and experimental studies in the search for new mercury removal technologies. Ex. 2024, Pavlish Decl. at ¶ 10. Because increased regulation of mercury emissions was expected to require significant upgrades to the country's fleet of coal-fired plants, much of the research focused on retrofit technologies that could be adopted at relatively low cost.

B. Development of the ’147 Technology

The EERC—including the ’114 inventors John Pavlish, Edward Olson, and Michael Holmes—was at the forefront of the mercury capture research effort. In the 1990s and 2000s, the EERC developed mercury sampling and testing methodologies and experimental test systems for simulating coal plant flue gases, and characterizing and measuring the various species of mercury present in coal plant flue gas. Ex. 2024, Pavlish Decl. at ¶ 8. During that time, the inventors identified various avenues of research for developing broadly applicable mercury capture solutions. Ex. 2024, Pavlish Decl. at ¶ 8; *See also* Ex. 2006, EERC Kickoff meeting presentation. This included research into dozens of different additives, sorbents, and other techniques for mercury capture. Ex. 2024, Pavlish Decl. at ¶¶ 16-20.

That work would eventually lead to the development of the ’147 patented technology. In particular, the inventors discovered that by providing a bromine based additive upstream of a boiler and injecting activated carbon into the flue gas downstream of the boiler, they could capture more than 90% of the emitted mercury. Ex. 2024, Pavlish Decl. at ¶¶ 44 - 47. In addition, the inventors also developed alternative methods of delivering bromine in carbon, including pre-treating the carbon with bromine. Ex. 1001 at 14:40-64. These results were described in their 2004 provisional application and in various reports to the

Department of Energy (DOE). Ex. 2012 at 73, Ex. 2013 at 49. The results were later confirmed for a variety of coal types and plant configurations in follow up testing performed for the DOE. The DOE and National Energy Technology Laboratory would later recognize this technology as a significant advancement in the field of mercury capture for coal-fired power plants. Ex. 2023. Because the EERC is a non-profit organization, it selected ME2C to commercialize the technology. Ex. 2017.

V. Claim Construction

All of the challenged claims of the ’147 patent require an “in-flight” reaction between bromine and activated carbon. Petitioners do not propose a construction for this term, but they implicitly render it meaningless by arguing that Nelson describes in-flight reaction. Pet. at 53. In truth, the inventors used the term “in-flight” to describe reacting bromine and activated carbon on-site in the gas transport system at a power plant, which they explained is different from Nelson’s description of pre-treating sorbents before using them at a power plant.

The specification “is always highly relevant” and “[u]sually ... dispositive; it is the single best guide to the meaning of a disputed term.” *Phillips v. AWH Corp.*, 415 F.3d 1303, 1315 (Fed. Cir. 2005) (quoting *Vitronics Corp. v. Conceptronic, Inc.*, 90 F.3d 1576, 1582 (Fed. Cir. 1996)). Indeed, “the only meaning that matters in claim construction is the meaning in the context of the patent.” *Trs. of Columbia*

Univ. v. Symantec Corp., 811 F.3d 1359, 1363 (Fed. Cir. 2016). Where the specification reveals that the patentee has given a special definition to a claim term that differs from the meaning it would ordinarily possess, "the inventor's lexicography governs." *Id*. at 1316.

The specification supports Patent Owner's proposed construction. It describes two different methods for reacting bromine with activated carbon to produce a promoted sorbent: (1) pre-treatment of activated carbon sorbent with bromine promoter in a separate treatment vessel (Ex. 1001 at 14:40-64); and (2) "in-flight" treatment of activated carbon sorbent with bromine promoter within the gas transport system at a coal-fired power plant (Ex. 1001 at 12:45-57). Thus, the term "in-flight" treatment is used to distinguish the pretreatment disclosed in Nelson. *See, e.g.,* Ex. 1001, at 9:43-57, 12:44-67.

The '147 patent describes an exemplary process for pre-treating a sorbent with bromine. In that example, activated carbon is placed in a rotating plastic barrel cement mixer and bromine gas is injected into the barrel. This process produced a brominated carbon that could then be transported to a coal-fired power plant. Ex. 1001 at 14:40-60.

The '147 patent also describes an exemplary process for "in-flight" treatment of a sorbent, as shown in figure 3. In this example, promoter and activated carbon sorbent are provided into a transport gas connected to the

combustion chamber flue gas line. As a result, the bromine and carbon react "in-flight" within the power plant gas transport system. Ex. 1001 at 9:43-61. In fact, the inventors coined the term "in-flight" to distinguish pre-treated sorbents. With reference to figure 3 embodiment, the '147 specification states: "This option is one form of what is referred to herein as 'in-flight' preparation of a promoted carbon sorbent in accordance with the invention." Ex. 1001 at 9:54-56. The '147 specification further emphasizes this distinction by describing the benefits of "in-flight" treatment as compared to "conventional concepts for treating sorbents off-site." Ex. 1001 at 12:44-67.

The prosecution history also supports ME2C's proposed construction. For example, the provisional application similarly describes in-flight treatment (Ex. 1020 at 13-14. and provides the following figuring illustrating in-flight promotion:

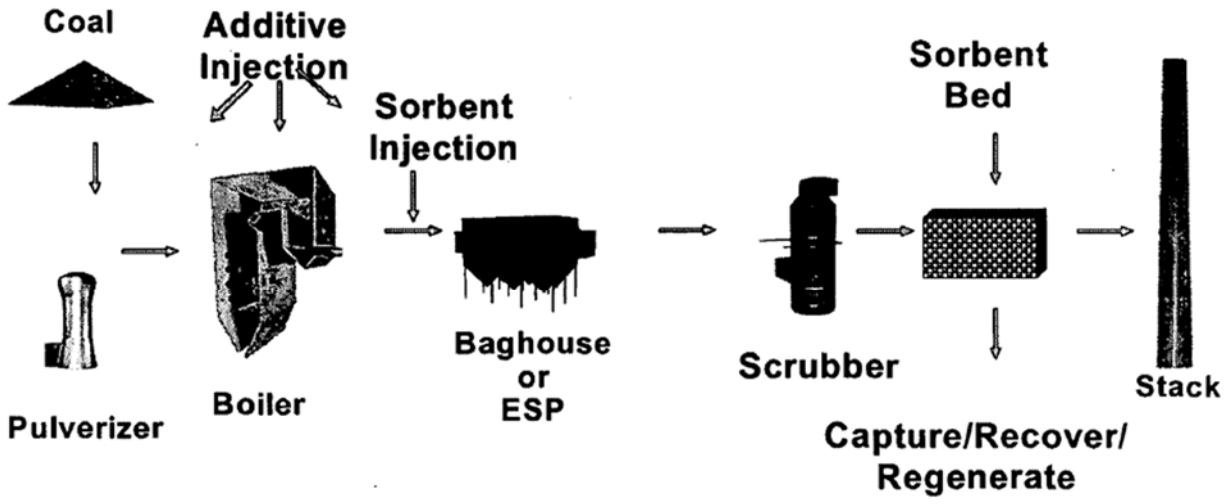

FIG. 2

The provisional contrasts the disclosed in-flight treatment with the pre-treatment process described in Nelson:

> **The Nelson method lacks** many of the features described in this application that impart exceptional activity to the sorbent in a convenient way, for example, . . . **the use of in-flight bromine treatment**.

Ex. 1020 at 12-13 (emphasis added).

Subsequent prosecution history further confirms' ME2C's proposed construction. During the prosecution of U.S. Patent No. 10,343,114,[3] the examiner had initially rejected a claim that required providing bromine on coal or into a combustion chamber and injecting activated carbon downstream of the combustion chamber. This rejection was based in part on Nelson. Ex. 2028 at 1696.

In response, inventor John Pavlish provided testimony distinguishing "in-flight" treatment from Nelson's disclosure of pre-treatment. Ex. 2028 at 1814 ("Nelson did not recommend or teach adding chemicals to the flue gas or in-flight mixing of Br2 and HBr with sorbents. Quite the contrary, he recommended that the bromine be contacted with the sorbent outside the presence of boiler gases. . ."). The examiner found this evidence persuasive, stating:

> For Claims 2-19 and 22-28, as shown within the declarations, **in-flight promotion with HBr or Br promotors is more effective for mercury**

[3] Petitioners have requested *inter partes* review of this patent. *See* IPR2020-832, IPR2020-834.

> **removal than treating the sorbent with HBr, Br or Br2 outside the mercury-containing gas.** Further, the Nelson reference seems to teach away from inflight promotion as it states that the bromide is extremely corrosive. Lastly, one having ordinary skill in the art would not have looked to in-flight promotion because for the prior art the contact time between the bromine promoter and the activated carbon is about 15 min, while when the promoter is contacted with the activated carbon in-flight, the contact time is generally less than 10 s.

Ex. 2028 at 1927-28 (emphasis added).

Finally, the claim language further supports ME2C's proposed construction. Independent claim 1 broadly covers both pre-treatment and "in-flight" treatment. Claim 17's use of the phrase "in-flight" indicates that the phrase is intended to narrow the claim scope, not to be mere surplusage. Moreover, the claim refers to an in-flight reaction in a "*gas stream*." This is consistent with the claim covering injection of bromine into a gas stream moving through a power plant's gas transport system, as opposed to gas located in a stationary treatment vessel such as the pre-treatment barrel described in the '147 specification.

Petitioners' wrongly interpret the in-flight reaction of claim 17 as one that could occur off-site in a "reactor." Pet. at 53 (citing Nelson, Ex. 1012 at 8:57-67). This is the term Nelson uses to describe vessels for pre-treating carbon with bromine, such as a rotating drum. Ex. 1012 at 8:57-67. However, as explained above, that is precisely the type of pre-treatment method that the inventors distinguished from "in-flight" treatment.

Accordingly, Patent Owner respectfully requests that the Board construe claim 17's requirement for an "in-flight" reaction to require a reaction on-site within the gas transport system at a power plant, not pre-treatment of sorbents.

VI. Petitioners Have Not Demonstrated a Reasonable Likelihood of Prevailing on the Merits.

With respect to all asserted grounds, Petitioners have failed to qualify at least one reference as prior art. In addition, Petitioners' analysis of Nelson rests on an erroneous claim construction, and Petitioners analysis of Lissianski-Patent fails to demonstrate that a person of skill in the art would have been motivated and able to combine this reference with the other asserted references.

A. All Asserted Grounds: Petitioners Fail to Prove that Nelson, Lissianski-Patent, and Downs-Halogenation Qualify as Prior Art.

Petitioners assert the following priority dates under 35 U.S.C. § 102(e):

Reference	Asserted § 102(e) Date[4]
Nelson[5]	May 6, 2003
Lissianski-Patent	January 6, 2004
Downs-Halogenation	March 22, 2004

[4] *See, e.g., Sun Studs, Inc. v. ATA Equip. Leasing, Inc.*, 872 F.2d 978, 983 (Fed. Cir. 1989) ("When patents are not in interference, the effective date of a reference United States Patent as prior art is its filing date in the United States, as stated in § 102(e), not the date of conception or actual reduction to practice of the invention claimed or the subject matter disclosed in the reference patent.").

[5] Nelson claims priority to an earlier filed provisional application, but Petitioners have not submitted that application as an exhibit, asserted it as prior art, or provided evidence that it supports the issued claims of Nelson as would be required to establish that application as the § 102(e) priority date for Nelson.

Petitioners have failed to qualify these references as prior art because the inventors conceived the claimed inventions prior to May 6, 2003 and diligently reduced to practice before March 22, 2004.

1. Applicable Law

"In an *inter partes* review, the burden of persuasion is on the petitioner to prove 'unpatentability by a preponderance of the evidence,' 35 U.S.C. § 316(e), and that burden never shifts to the patentee." *Dynamic Drinkware, LLC v. Nat'l Graphics, Inc.*, 800 F.3d 1375, 1378 (Fed. Cir. 2015). Thus, while the burden of production may shift to a patentee (e.g., when arguing that a reference does not qualify as prior art), the burden of persuasion remains with the petitioner. *Id.* at 1379. In particular, a patentee bears the burden of coming forward with evidence of earlier conception, diligence, and/or reduction to practice, but the burden of proving that a reference qualifies as prior art remains with the petitioner. *See Mahurkar v. C.R. Bard, Inc.*, 79 F.3d 1572, 1576 (Fed. Cir. 1996) (explaining that the burden of persuasion remains on patent challenger to prove up prior art); *see also Freebit AS v. Bose Corp.*, No. IPR2017-01308, 2017 WL 5202106 at *6 (PTAB Nov. 8, 2017).

A patent owner may antedate a reference by either showing actual reduction to practice prior to the effective date of the adverse reference, or conception prior to the effective date of the adverse reference plus diligence to actual or

constructive reduction to practice by the patent owner. *In re Steed*, 802 F.3d 1311, 1316 (Fed. Cir. 2015); *see* MPEP 2138.01(II) (example 3). "The principles are legal, but the conclusions of law focus on the evidence, for which the Board's factual findings are reviewed for support by substantial evidence." *Steed*, 802 F.3d at 1316; *see NFC Tech., LLC v. Matal*, 871 F.3d 1367, 1371 (Fed. Cir. 2017).

To establish actual reduction to practice of a claimed invention, "an inventor must prove that he constructed his claimed invention and that it would work for its intended purpose." *Mazzari v. Rogan*, 323 F.3d 1000, 1005 (Fed. Cir. 2003). Actual reduction to practice requires testing or demonstration of the device in operation. *Streck, Inc. v. Research & Diagnostic Sys., Inc.*, 659 F.3d 1186, 1195 (Fed. Cir. 2011).

To establish reasonable diligence towards reduction to practice, the patent owner must show that there was reasonably continuous diligence. *See, e.g., Tyco Healthcare Grp. v. Ethicon Endo-Surgery, Inc.*, 774 F.3d 968, 975 (Fed. Cir. 2014); *Monsanto Co. v. Mycogen Plant Science, Inc.*, 261 F.3d 1356, 1370 (Fed. Cir. 2001). Under this standard, an inventor is not required to work on reducing his invention to practice every day during the critical period, and periods of inactivity within the critical period do not automatically vanquish a patent owner's claim of reasonable diligence. *Perfect Surgical Techniques, Inc. v. Olympus Am., Inc.*, 841 F.3d 1004, 1009 (Fed. Cir. 2016). Diligence must be shown from just prior to the

competing reference's effective date until the date of the invention's reduction to practice. *Id.*

A patent owner's assertion of an earlier invention date must be corroborated with evidence other than an inventor's testimony, and this evidence is evaluated under the "rule of reason:"

> There is no particular formula that an inventor must follow in providing corroboration of his testimony of conception. Instead, corroboration is determined by a 'rule of reason' analysis, in which an evaluation of all pertinent evidence must be made so that a sound determination of the credibility of the inventor's story may be reached. Under the rule of reason, the evidence must be considered as a whole, not individually. Thus, *an inventor's conception can be corroborated even though no one piece of evidence in and of itself establishes that fact, and even through circumstantial evidence. At bottom, the goal of the analysis is to determine whether the inventor's story is credible*.

NFC Technology, LLC v. Matal, 871 F.3d at 1371 (Fed. Cir. 2017) (emphasis added, citations omitted).

Moreover, the Federal Circuit "does not require that evidence have a source independent of the inventors on every aspect of conception and reduction to practice; 'such a standard is the antithesis of the rule of reason.'" *E.I. du Pont De Nemours & Company v. Unifrax I LLC*, 921 F.3d 1060 (2019) (quoting *Cooper v. Goldfarb*, 154 F.3d 1321, 1327 (Fed. Cir. 1998)). Rather, the law requires only that the corroborative evidence, including circumstantial evidence, support the credibility of the inventors' story. *Id.* For example, for claims covering a chemical

range, the inventor need not specifically corroborate the range when his testimony is otherwise credible. *Id.* (affirming jury verdict of no invalidity despite lack of corroborating evidence for specific range claimed in the patent). The question of the sufficiency of evidence of corroboration is a question of fact. *Fleming v. Escort Inc.*, 774 F.3d 1371, 1377 (Fed. Cir. 2014) ("We have treated the sufficiency of corroboration as a question of fact.").

A Petition should be denied if the Petitioner fails to qualify a reference as prior art in light of evidence of an earlier invention date. *See Freebit AS v. Bose Corp.*, No. IPR2017-01308, 2017 WL 5202106 at *6 (PTAB Nov. 8, 2017).

2. Factual Background

The inventors of the '147 Patent have testified that they conceived of the invention at least by August 2002, and, after obtaining DOE funding for testing, they reduced the challenged claims to practice at least as early as February 2004. *See* Ex. 2024 (declarations of inventors John Pavlish, Edwin Olson, and Michael Holmes). These dates are corroborated by contemporaneous meeting presentations, testing logbooks, and post-testing reports. *See generally* Exs. 2002-2016.

a) Prelude to the ’147 Invention

Inventor John Pavlish has testified that the ’147 technology was developed by the inventors as part of a research project into mercury capture at the EERC. He described the beginning of this project:

> The EERC held a kickoff meeting to discuss the project on February 28, 2002. During this meeting we discussed the project timeline and overall strategy. As shown below, part of the focus of the project was to identify sorbents and oxidation options. In particular, we had identified a potential reaction between chlorine and activated carbon that we intended to study further.

Ex. 2024 at 19. This description is corroborated by slides from that kickoff meeting that identify their plan to test various additives and sorbents. Ex. 2007, Ex. 2008.

After receiving DOE funding, the inventors were able to test various sorbents and additives at the EERC’s Pilot Test Combustor (“PTC”). The PTC is a coal combustion chamber with various testing and pollution control equipment designed to simulate larger, commercial power plants. Ex. 2024, Pavlish Decl. at 11. A representation of the PTC is shown below:

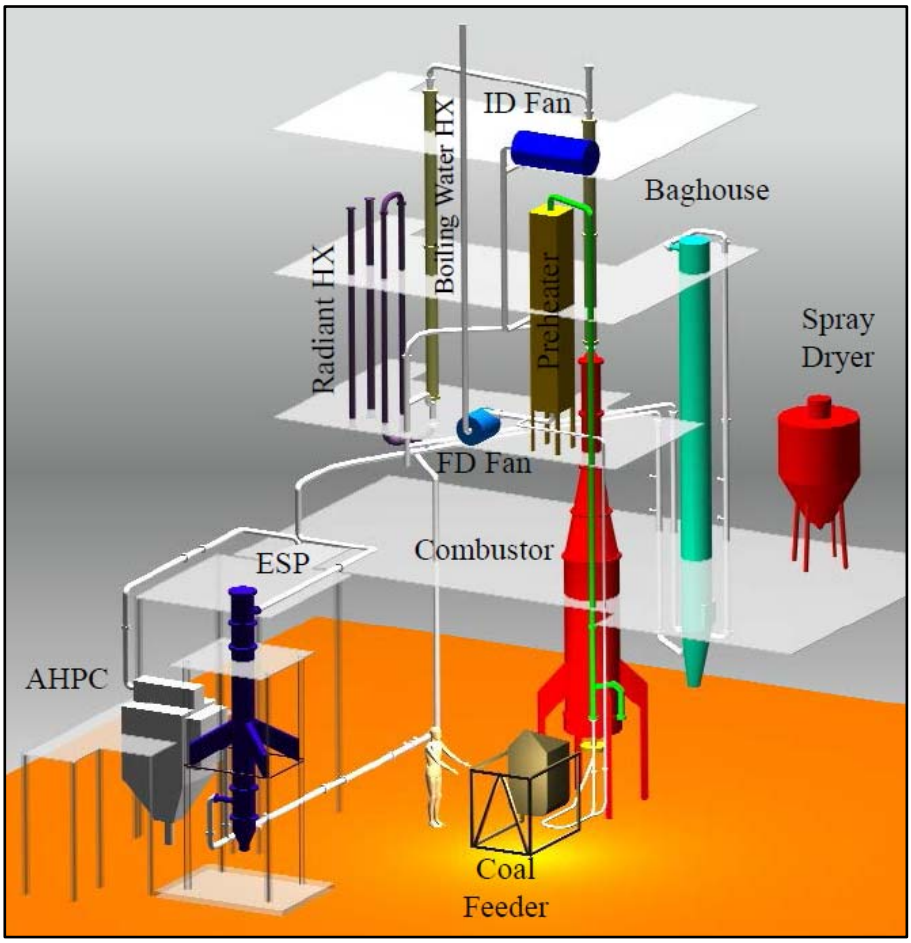

Ex. 2024, Pavlish Decl. at ¶¶ 11-14. Because of the cost associated with operating the PTC, Mr. Pavlish explained that the EERC typically did not allow testing without third party or government funding. Ex. 2024, Pavlish Decl. at ¶ 16.

By the end of 2002, the inventors had completed various tests using pre-combustion chamber additives, and post combustion sorbents. These test results were reported to the DOE. Ex. 2010. While these results provided useful data, they demonstrated that more work was needed to develop a viable mercury control strategy for the entire US coal fleet.

b) Conception of the '147 Patent.

While the inventors were conducting the DOE-funded testing, they also continued to theorize as to alternative techniques for mercury control. By August 2002, they had conceived of using bromine as the pre-combustion additive. Ex. 2024, Pavlish Decl. at ¶¶ 25-30. This is corroborated by the "research ideas" file that Mr. Pavlish maintained. Ex. 2014. It describes the inventors' current work using additives to enhance the effectiveness of sorbents:

> 1. Evaluate various chlorine (or other) additives for enhancement of sorbent reactivity/effectiveness. Recent pilot and field data suggest that introducing low-cost additives may significantly improve sorbent effectiveness, leading to better sorbent utilization. Additives to the fuel, sorbent, or directly to the flue gas should be considered.

Ex. 2014. It also indicates that they should study the use of bromine:

> 4. Control of Hg Emissions Using Ultraviolet (UV) Light and Ionized Halogens. There is evidence that UV light and halogens (Cl and Br) from sea ice catalyze the oxidation of elemental Hg in the Arctic and Antarctic atmospheres, causing the oxidized form of mercury to deposit on the snow. An investigation of the fundamental mechanism of oxidation needs to be done to validate the hypothesis and to determine the fundamental reaction process and rates, the optimum level of Cl or Br radicals to expedite the reaction, synergisms between the two halogens, and to surmise whether SO_x and NO_x may have any detrimental effects on the oxidation reaction in real combustion flue gas. A novel control technology approach might evolve from this fundamental work.

Ex. 2014. His conclusion that a "novel control technology approach might evolve from this fundamental work" was prescient. The metadata for this file indicates that it was last modified on August 30, 2002.

c) Reduction to Practice of the ’147 Patent.

By 2003, the EERC had obtained funding for further rounds of PTC testing. Ex. 2024, Pavlish Decl. at ¶ 24. During tests conducted in September 2003, December 2003, the inventors combusted coal with added bromine, i.e., they injected bromine into mercury containing gas in a combustion chamber, and they also injected activated carbon into the mercury containing flue gas. In so doing, the bromine promoter produced an inflight reaction with the mercury and activated carbon sorbent. These tests reduced to practice all aspects of the ’147 patent claims except the 1% - 30% bromine to carbon ratio recited in claim 17.

These tests were described in reports provided to the DOE. For example, the September testing was described as follows:

> The pilot-scale test was started on September 8, 2003, and was completed on September 19, 2003. A 550,000-Btu/hr pulverized coal (pc)-fired unit, known as the PTC, was used to fire lignites and test mercury control options. The coal combustion flue gas exiting the PTC was cooled down to a nominal temperature of 149°C (300°F) and then was introduced into a single-wire tubular ESP unit. Figure 4 shows the schematic diagram of the system. Furnace additives were added to coal prior to introduction to the furnace. Mercury sorbents were fed with a K-Tron dual-screw feeder upstream of the ESP.

Ex. 2011 at 10; *See also* Exs. 2012, 2013 (describing December and February testing). A simplified diagram of the test setup is illustrated below:

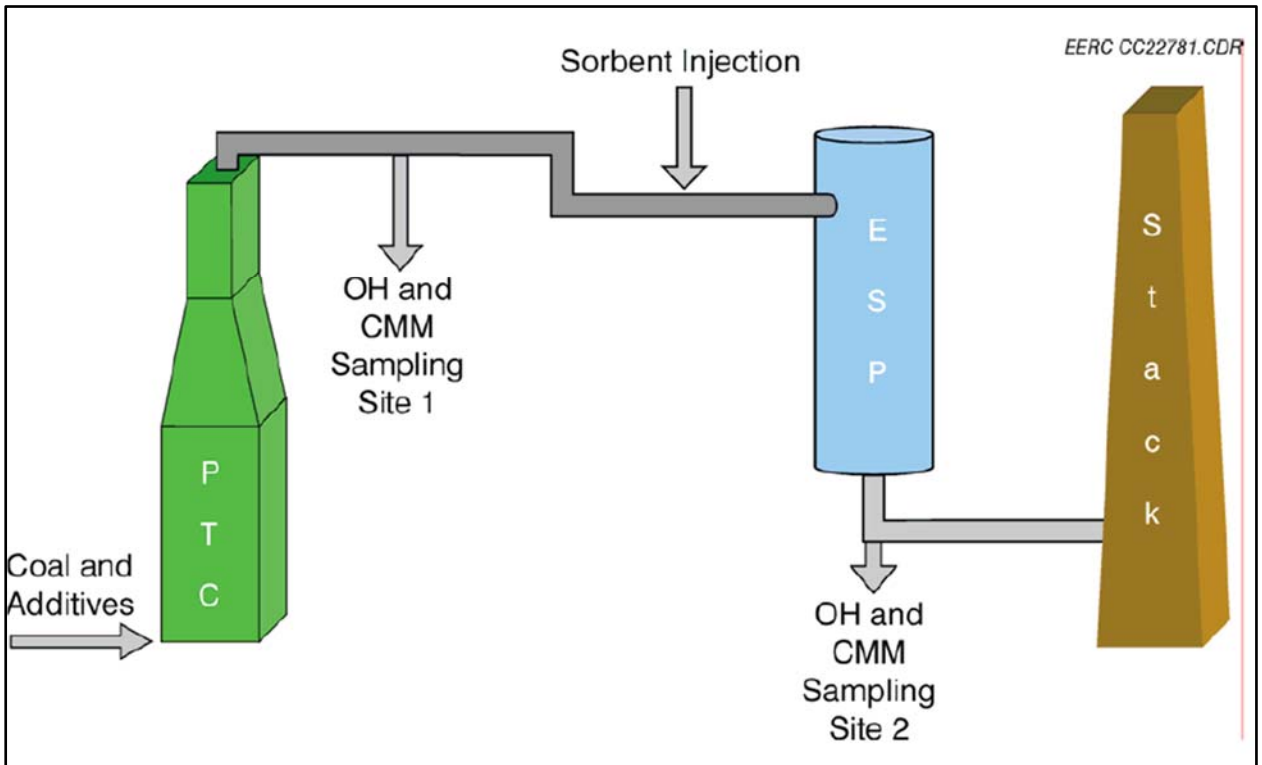

Figure 4. Injection and sampling schematic of the PTC with an ESP.

Ex. 2024, Pavlish Decl. at 41-42; Ex. 2011 at 11. These tests were also recorded in logbooks maintained by the EERC. *See* Ex. 2016 (testimony of non-inventor Tom Erickson confirming that the logbooks were maintained by the EERC and entries recorded at the time of the actual testing).[6] The logbook entries identify the use of activated carbon as the sorbent and sodium bromide as the additive:

[6] Moreover, the test title recorded in the logbook matches the test title provided in the DOE reports. *Compare* Ex. 2016, logbook entries (describing September 2003 entries for test: "PTC-FM-639") *with* Ex. 2012, Feb. 2005 Report at 10 (providing coal analysis for "PTC-FM-639"); 9 (explaining that this testing occurred in September 2003).

11:58	Added 196.8 grams of Carbon to the k-tron feeder inlet to the ESP	BR
12:25	Open port, installing Sampling Probe for M-26	RL
12:26	Started M-26 sampling, ESP-inlet T1-9	GF
13:26	Done with M-26	
13:27	Port open to Remove Sampling ~~probe~~ probe M-26	RL

To Page No.

Witnessed & Understood by me, | Date 9/18/03 | Invented by | Recorded by | Date

TITLE PTC-Em-639 Project No. Book No. CONFIDENTIAL

From Page No.

1836	STARTED SODIUM BROMIDE FEEDER @ 40g/HR 375 SCF 3 lbs coal - 48g Sodium Bromide	
1904	Added 204 lbs Coal	BR/K
1926	Added new batch Sodium Bromide Coal to feeder Same blend 3 lbs C - 48g SB @ 40gr/hr	KJ

Witnessed & Understood by me, | Date 9/18/03 | Invented by | Recorded by | Date

Ex. 2016, Erickson Decl.; *see also* Ex. 2024, Pavlish Decl. at ¶¶ 31-39.

The use of various coal additives and sorbents tested are also listed in the DOE report:

Table 1. Test Matrix for Unscrubbed Systems Equipped with ESPs

	Mercury Oxidant Additive		Sorbent	
Test No.	Category	Injection Rate, lb/Macf	Category	Injection Rate, lb/Macf
T1-1(baseline)	None	NA[1]	None	NA
T1-2	None	NA	DARCO® FGD	2.75–18.4
T1-3	NaCl	3.76–14.7	None	NA
T1-4	NaCl	3.76–14.7	DARCO® FGD	2.75–4.59
T1-5	SEA2	1.84–7.34	None	NA
T1-6	SEA2	1.84	DARCO® FGD	2.57
T1-7	NaCl	7.34–11.0	HCl-treated FGD	2.57–4.59
T1-8	None	NA	EERC-treated carbon	1.84–2.75
T1-9	SEA2	1.84	EERC-treated carbon	2.75
T1-10	Zn	7.34	None	NA
T1-11	Zn and NaCl	7.34–11.0	None	NA
T1-12	None	NA	Na_2S_4 (solution)	0.89–6.67
T1-13	$CaCl_2$	11	DARCO® FGD	0–4.59
T1-14	None	NA	ALSTOM sorbent	1.1–3.1

[1] Not applicable.

Ex. 2011 (describing September 2003 testing). The test matrix indicates that test T-6 employed the additive SEA2 (sodium bromide)[7] and the sorbent DARCO FGD (activated carbon).[8] Inventor John Pavlish has described similar documentation for the December 2003 and February 2004 tests. Ex. 2024 at ¶¶ 31-49.

[7] The term SEA2 is used because, at the time this report was provided to the DOE, the EERC had not yet received patent protection. Ex. 2012 at 24 ("The chemical composition of this compound is currently not being reported because of proprietary concerns. This additive has been termed SEA2."). Nonetheless, the report does describe "SEA2" as "an inorganic halide compound that effectively promotes the formation of Hg_2^+ and Hg(p) as well as enhances sorbent mercury capture performance." Ex. 2024, Pavlish Decl. at ¶ 43; Ex. 2012 at 24. As confirmed by the logbook entries (Ex. 2016), the halide was sodium bromide.
[8] DARCO FGD is the trade name for a powdered activated carbon product from Cabot (formerly Norit Americas). Ex. 2011 at xiii; *see also* Ex. 2012 at x, 23

The results of these tests confirmed the significance of the inventors' discovery. *See* Ex. 2012 at xiv ("The combination of DARCO® FGD injection at 1.84 lb/Macf and SEA2 addition provided exceptional SDA–FF Hg(g) capture, >90%, even at the lower addition rate of 1.84 lb/Macf."). The inventors also noted the synergistic effect between SEA2 and activated carbon:

> The significant improvement by DARCO® FGD–SEA2 is not merely an additive effect but more a synergistic response. The SEA2 addition in the combustion zone not only enhances gaseous mercury conversion to particulate-associated mercury, but also improves DARCO® FGD carbon reactivity with mercury species.

Ex. 2012 at 18.

The inventors performed similar follow up testing in February 2004. These tests practiced all aspects of the '147 claims including the 1% - 30% bromine to carbon ratio recited in claim 17:

(describing Darco FGD as a "LAC," i.e., "lignite-based activated carbon"); Ex. 1002, Niksa Decl. at ¶ 151 (describing Norit activated carbon).

Table 9-2. Week 1 – Test Matrix

Date	Sampling Inlet	Sampling Outlet	Sorbent	Rate, g/hr	Rate, lb/MMacf	Oxidant	Rate, g/hr	Rate, lb/MMacf
2/2/04	OH	OH	Baseline					
	M-29		Baseline					
			DARCO	25.0	7.03			
			DARCO	28.0	7.84			
			DARCO	32.0	8.96			
		OH	DARCO	45.0	12.60			
			DARCO	69.0	19.20			
2/3/04			Baseline					
						SEA1	15.2	4.28
						SEA1	29.8	8.38
			DARCO	25.0	7.03	SEA1	29.8	8.38
	OH	OH	DARCO	25.0	7.03	SEA1	45.5	12.80
	M-29		DARCO	25.0	7.03	SEA1	59.9	16.73
			DARCO	25.0	7.03	SEA1	15.2	4.28
2/4/04			Baseline					
						SEA2	9.8	2.73
			DARCO	25.0	6.96	SEA2	9.8	2.73
	OH	OH	DARCO	15.0	4.18	SEA2	9.8	2.73
			DARCO	15.0	4.18			
	M-29		DARCO	15.0	4.18	SEA2	6.9	1.92
			DARCO	15.0	4.18	SEA2	4.3	1.20
			DARCO	15.0	4.18			
			DARCO	15.0	4.18	SEA1–SEA2	2.6	0.72
2/5/2004			Baseline					
	OH	OH	EERC carbon	25.0	6.97			
			EERC carbon	35.0	9.76			
			Am. Silicate	25.0	6.91			
			Am. Silicate	50.0	13.82			

Notes:
M-29 = EPA Method 29
EERC carbon = EERC-treated DARCO carbon
Am. Silicate = Amended Silicate
SEA1–SEA2 = 50%–50% blend of SEA1 and SEA2. The total rate for both is given.

3. Analysis

a) Petitioners Fail to Qualify Downs-Boiler as Prior Art.

Petitioners assert a prior art date for Downs-Boiler of March 22, 2004. As explained above, the inventors actually reduced the claims of the '147 patent to practice through pilot scale testing conducted from September 2003 to February 2004. In these tests, the inventors mixed bromide and Norit Darco FGD activated

carbon. These are examples of promoter and sorbent disclosed in the specification to provide the promoted sorbent recited in claim 1. These materials were exposed to mercury produced from the combustion of coal and removed from the gas using an electrostatic precipitator and/or fabric filter as recited in claim 1. In addition, at least some bromide was added separately from the sorbent material to allow for in-flight reaction of these components as recited in claim 17. During the February 2004 tests, this bromide was added within the ratio recited in claim 17 (1 gram to 30 grams of promoter to 100 grams of sorbent). Because the bromide was provided to the pulverized coal transported into the combustion chamber the promoter was provided to a mercury containing transport gas as recited in claims 18 and 19. Finally, these tests indicate that the inventors monitored the mercury content of the gas and adjusted injection rates as part of their effort to optimize the process. This satisfies the requirement of claim 20.

This reduction to practice is confirmed by testimony from all three inventors (Ex. 2024), and corroborated by non-inventor testimony (Ex. 2016), logbook entries (Ex. 2016), and DOE reports (Exs. 2011-2013). Additional documentation (Exs. 2005-2010, 2014-2015) from the inventors' meetings and development efforts confirms that, under the "rule of reason," their story is credible. *See NFC Technology*, 871 F.3d at 1371. Thus, Petitioners have failed to demonstrate that Downs-Halogenation qualifies as prior art.

b) Petitioners Fail to Qualify Lissianski-Patent as Prior Art.

Petitioners assert a prior art date for Lissianski-Patent of January 6, 2004. As explained above, by September 2003, the inventors reduced all aspects of the '147 patent claims to practice except for the claimed ratio of 1-30 grams of promoter per 100 grams of sorbent (i.e., a 1%-30% ratio). This ratio was used during the February 2004 testing. This is confirmed by testimony from all three inventors (Ex. 2024), and corroborated by non-inventor testimony (Ex. 2016), logbook entries (Ex. 2016), and DOE reports (Exs. 2011-2013). Thus, the prior art status of this reference depends on whether Patent Owner can swear back before the February 2004 testing. Patent Owner can do so because this range limitation is entitled to no patentable weight, and because the inventors conceived of the full range of bromine to carbon ratios at least by September 2003.

An inventor can swear behind a reference by demonstrating that any difference between the patent claim at issue and the inventor's prior conception and/or reduction to practice is merely obvious:

> Even if applicant's 37 CFR 1.131(a) affidavit is not fully commensurate with the rejected claim, the applicant can still overcome the rejection by showing that the differences between the claimed invention and the showing under 37 CFR 1.131(a) would have been obvious to one of ordinary skill in the art, in view of applicant's 37 CFR 1.131(a) evidence, prior to the effective date of the reference(s) or the activity. Such evidence is sufficient because applicant's possession of what is shown carries with it possession of variations and adaptations

> which would have been obvious, at the same time, to one of ordinary skill in the art.

MPEP § 715.02; *see also In re Spiller*, 500 F.2d 1170, 1177 (C.C.P.A.1974) ("Certainly appellants should not be required to submit facts under Rule 131 showing that they reduced to practice that which is obvious . . . for the purpose of antedating a reference.").

Here, Petitioners' expert testified—and ME2C does not dispute—that the 1%-30% range limitation is not entitled to any patentable weight. *See* Ex. 1003 at ¶ 369 ("Through routine process optimization and routine experimentation, a POSITA would have adjusted the rate of addition of the promoter and/or the rate of addition of the sorbent material to achieve a range from about 1 g to about 30 g of promoter per 100 grams of the sorbent material . . . The range presented nothing more than optimization of result-effective variables that would have been obvious to a POSITA."). Thus, under MPEP § 715.02, Patent Owner is not required to submit evidence that this limitation was conceived or reduced to practice prior to an asserted prior art reference. Because the September 2003 testing reduced to practice all aspects of the '147 claims except this non-inventive range limitation, the reduction to practice date for these claims is September 2003. No further consideration of conception or diligence is necessary.

In addition, an inventor can demonstrate conception of a range limitation by demonstrating that the claimed range falls within a broader range envisioned by the inventor. An inventor is not required to provide specific corroboration for a range limitation. *E.I. du Pont De Nemours & Company v. Unifrax I LLC*, 921 F.3d 1060 (2019) (affirming earlier conception date and explaining that specific corroboration for range limitation was not required). For example, in *Massachusetts Eye & Ear Infirmary v. Novartis Ophthalmics, Inc.*, 199 F. App'x 960, 964 (Fed. Cir. 2006), the patent at issue covered the method of administering a drug and then using a laser to irradiate an affected area. The claims required the laser to have a particular range of irradiance. The named inventor claimed that he had conceived of the general idea of the invention regardless of the laser range in 1992, and the Court found that the specific range recited in the claim was contributed by a non-inventor some time later. *Id.* at 961. The parties disputed whether the claims were conceived in 1992, or only after the range recited in the claims was calculated. *Id.* at 962-963. The District Court held that conception did not occur until the specific claimed range was calculated. The Federal Circuit reversed. It explained that the conception date for a claim with a range limitation may be the date the inventor conceives of the invention including using a range that is broader than the claimed range.

In this case, the inventors generally conceived of performing in-flight mercury capture with bromine and activated carbon by August 2002, and certainly no later than September 2003. This process encompasses the 1% - 30% range recited in the ’147 claims. Thus, Patent Owner has demonstrated conception of the ’147 patent claims by no later than September 2003.

The inventors were diligent in reducing the invention to practice after that date. “A patent owner need not prove the inventor continuously exercised reasonable diligence throughout the critical period; it must show there was reasonably continuous diligence.” *Perfect Surgical Techniques, Inc. v. Olympus Am., Inc.*, 841 F.3d 1004, 1009 (Fed. Cir. 2016) (citations omitted, emphases original). “Under this standard, an inventor is not required to work on reducing his invention to practice every day during the critical period. And periods of inactivity within the critical period do not automatically vanquish a patent owner’s claim of reasonable diligence.” *Id.* Ultimately, “the purpose of the diligence requirement is to show that the invention was not abandoned or set aside.” *ATI Techs. ULC v. Iancu*, 920 F.3d 1362, 1370 (Fed. Cir. 2019).

The relevant time period for establishing diligence is from January 5, 2004 to February 4, 2004. This is an entirely reasonable amount of time for the inventors to have designed, developed, and performed the necessary testing. *See ATI Techs.*, 920 F.3d at 1374 (reversing PTAB finding of no diligence based on six

month lapse of time). There is simply no evidence that the inventors abandoned their invention during that one month time period. Accordingly, Petitioners cannot meet their burden of qualifying Lissianski-Patent as prior art.

c) Petitioners Fail to Qualify Nelson as Prior Art.

Petitioners assert a prior art date for Nelson of May 6, 2003. As explained above, the inventors reduced the '147 patent to practice by September 2003. Thus, the prior art status of this reference depends on the inventors' conception date and diligence.

ME2C has provided evidence that the inventors conceived of the '147 patent prior to May 6, 2003. The inventors testified that, in early 2002, they planned to test various combinations of oxidizing agents and sorbents. Ex. 2024, Pavlish Decl. at ¶¶ 20-22. During the summer of 2002, they tested the use of pre-combustion chamber chlorine additives combined with injection of activated carbon sorbent downstream of the combustion chamber. Ex. 2024, Pavlish Decl. at ¶¶ 16-25. Their testimony is corroborated by internal EERC presentations describing the testing plans and modeling of the chemical reaction between chlorine, carbon, and mercury (Exs. 2008, 2010) logbooks describing the chlorine tests (Ex. 2016), and a report prepared for the DOE that describes the tests (Ex. 2010). In particular, Ex. 2010 explains that tests performed in June and July of 2002 demonstrated that "chlorine additives could be used to enhance the mercury

removal effectiveness of DARCO FGD [an activated carbon]," "adding NaCl to a coal is more effective in enhancing mercury capture than adding it to DARCO FGD," and "the addition of Cl also appeared to oxidize a portion of the mercury." Petitioners offer no reasons to doubt the credibility of these assertions.

Thus, the only remaining question for purposes of determining prior conception is whether the inventors conceived of using bromine in place of chlorine and the 1% - 30% bromine/carbon ratio before May 6, 2003. The inventors testified that they did conceive of using bromine at least by August 2002. Ex. 2024, Pavlish Decl. at ¶¶ 26-30. Their assertion is corroborated by Mr. Pavlish's research notes describing the need to study bromine as an oxidizing catalyst. Ex. 2014. This testimony is also corroborated by the evidence as a whole as the inventors actually tested the use of bromine during the next round of PTC testing in September 2003. Ex. 2024 at ¶ 31.

In addition, for the same reasons discussed above with regard to Lissianski-Patent, this evidence also demonstrates conception and reduction to practice of the range limitation of claim 17. Thus, this evidence is sufficient to show prior conception.

The relevant time period for establishing diligence is from May 5, 2003 to September 2003. This is an entirely reasonable amount of time for the inventors to have designed, developed, and performed the necessary testing to optimize their

new approach to mercury capture. *See ATI Techs.*, 920 F.3d at 1374 (reversing PTAB finding of no diligence based on six month lapse of time). There is simply no evidence that the inventors abandoned their invention during that time period. Quite the contrary, the inventors' post-testing reports to the DOE demonstrate that they were continuing to work on the invention, to explore further studies, and to report their results to the government in a manner consistent with the EPA's timeline for developing mercury regulations. Accordingly, Petitioners cannot meet their burden of qualifying Nelson as prior art.

B. Ground 1: Petitioners Fail to Prove Obviousness in Light of Nelson.

Petitioners' invalidity theory for ground 1 depends on an erroneous claim construction. In particular, Petitioners argue that claims 17 and 20 may be met by pre-treating sorbent off-site, as opposed to treating sorbent "in-flight" within the gas transport system of the power plant. Pet. at 53 ("Notably, nothing in claim 17 (or claim 1) of the '147 patent limits the in-flight reaction to one that occurs at the combustion site.") As explained above (*supra* sec. V.), this interpretation of claim 17 is incorrect.

Under the correct construction, Petitioners do not allege that ground 1 renders claims 17 and 20 invalid. Indeed, the Patent Office previously distinguished Nelson from in-flight treatment. Ex. 2028 at 1927-28 ("[I]n flight

promotion with HBR or Br promoters is more effective for mercury removal than treating the sorbent with HBr, Br, or Br2 outside the mercury-containing gas [as described in Nelson].”). Accordingly, if the Board adopts Patent Owner’s proposed construction, Petitioners will be unable to demonstrate patentability with respect to this asserted ground.

C. Ground 2: Petitioners Fail to Prove that a POSITA Would Combine Nelson with Lissianski-Patent.

According to Petitioners, a POSITA would be motivated to combine the halogen additives of Lissianski-Patent with the brominated carbon of Nelson either to improve mercury capture or NOx reduction. Neither of these arguments are persuasive.

First, with regard to mercury capture, Petitioners assert that “[a] POSITA wanting to increase mercury removal, without increasing the sorbent-injection rate, would have been motivated to supply additional halogen to mercury-containing gas to increase the fraction of oxidized mercury in the mercury containing gas, thus making the mercury more susceptible to removal by activated carbon.” Pet. at 67. That is precisely the argument the examiner initially proposed and later rejected during prosecution of the ’114 patent. For all of the reasons described above (sec. III.A.2.a.), this theory should fail now as well.

Second, with regard to NOx reduction, Petitioners fail to show that this concern would motivate a POSITA to arrive at the claimed invention. A patent challenger cannot rely on hindsight to show that a POSITA would make an invalidating combination over a combination that relies on more conventional approaches. For example, in *Argentum Pharm. LLC v. Alcon Research, Ltd.*, No. IPR2017-01053, 2018 WL 4565052, at *4 (P.T.A.B. Sept. 20, 2018), the Petitioner argued that a POSITA would be motivated to replace the preservative in a drug with zinc. However, the Board found that this approach would have been unconventional and that e POSITA could have used multiple other conventional preservatives instead of zinc. The Board found the challenged claims not unpatentable. *Id.*

Petitioners cite Lissianski-Patent as teaching that injecting NH_4Cl at temperatures of around 1700 degrees will result in reduced NOx and mercury emissions. Ex. 1036 at 3:15-25. At that temperature, NH_4Cl separates into NH_3 and HCl. Ex. 1036 at 3:43-50. As Petitioners' expert explained, NH_3 (ammonia) was a known additive for reducing NOx emissions (Ex. 1003 at ¶ 111; Ex. 1027 at 202-203) and HCl was a known mercury oxidizing agent (see, e.g., Ex. 2026, Felsvang). In other words, the bulk of Lissianski-Patent merely indicates that two conventional chemicals can be used for their conventional purposes by injecting them at the same time and at the appropriate temperature.

Because Petitioners have failed to show that a POSITA would be motivated to modify Nelson to arrive at in-flight sorbent promotion for mercury capture, they cannot rely on this NOx theory to fill in the gap. If a POSITA using Nelson were motivated to further improve NOx reduction, that could be accomplished in the conventional way by injecting NH_3. Petitioners offer no reason other than hindsight for a POSITA to inject NH_4Br instead. In other words, Petitioners may not merely assume that a POSITA would select NH_4Br over NH_3, some evidence must be provided. This is particularly true where the Patent Office has already determined that a POSITA would have had significant concerns regarding in-flight sorbent promotion (e.g., corrosion, insufficient mixing time for the halogen and sorbent, etc., *see supra* sec. III.A.2.a). Because Petitioners have failed to identify error in the examiner's analysis of this issue, or otherwise provide evidence supporting their theory, they have failed to show that a POSITA would combine the ground 2 references as asserted in the Petition.

VII. ARGUMENT FROM IPR2020-00928: The '147 Patent Is Entitled to the Earliest Asserted Filing Date

Petitioners attempt to justify filing multiple petitions against this patent by arguing that they will only challenge the priority date of the '147 claims in IPR2020-00928. However, Petitioners made the same representation in related

proceedings (IPR2020-00834) and have reversed course. Accordingly, Patent Owner provides the priority date analysis from IPR2020-00928 below:

ARGUMENT FROM IPR2020-00928

IV. Claim Construction

Although Petitioners do not propose any terms for construction, Petitioners have interpreted claim 17 in a manner that is contrary to the plain claim language. In particular, Petitioners insert the following limitation into the claim language: "injecting separately the bromine containing promoter[, **and no other material**,] into a gas stream." The Board should reject this interpretation by ruling that the plain and ordinary meaning of the claim language does not include this limitation.

The '147 patent describes a number of different promoters, sorbents, and additional materials that can be used to practice the invention. The claims at issue do not exclude the use of additional materials beyond those specifically recited in the claims. For example, claim 1 requires the use of "particulate sorbent material comprising activated carbon." While this claim no doubt requires the use of activated carbon, it does not exclude the use of other sorbents such as pyrolysis char. *See* '147 patent at 2:55-60. Similarly, claim 1 requires the use of "a bromine containing promoter." Again, this requires use of a promoter with bromine, but it does not exclude the use of a promoter that also contains some other material such as an organic solvent or chloride. *See* '147 patent at 7:45-50.

Claim 17 refers back to claim 1 by reciting "injecting separately ***the*** bromine containing promoter." Thus claim 17 also incorporates claim 1's broad recitation of a promoter that must contain bromine, but may also be mixed with other material. The requirement that this promoter must be injected into a gas stream "separately" from the particulate sorbent material does not change that fact. For example, consider an embodiment where bromine and pyrolysis char are injected together at one location and activated carbon is injected at a separate location. In this embodiment, the bromine is injected separately from the activated carbon, and thus, it practices claim 17. Petitioners implicit interpretation of this term would exclude this embodiment.

Petitioners' interpretation also conflicts with the general principle of patent law that "the addition of elements not recited in the claim cannot defeat infringement." *Gillette Co. v. Energizer Holdings, Inc.*, 405 F.3d 1367, 1372 (Fed. Cir. 2005) (explaining that a patent claim requiring a razor with three blades covered a product that included four blades). The Board should not endorse a claim construction position that would lead to this sort of improper non-infringement argument.

V. Applicable Law Related to Patent Priority

A. Legal Standard for Patent Priority

"To be entitled to the benefit of the filing date of an earlier-filed application . . . the disclosure of the invention in the prior application and in the later-filed application must be sufficient to comply with the requirements of 35 U.S.C. 112(a) except for the best mode requirement." MPEP 211.05. To satisfy the written description requirement under 35 U.S.C. § 112(a), the specification "must clearly allow persons of ordinary skill in the art to recognize that the inventor invented what is claimed." *Ariad Pharm., Inc. v. Eli Lilly & Co.*, 598 F.3d 1336, 1351 (Fed. Cir. 2010) (en banc) (internal quotation marks and alterations omitted). In other words, a patent applicant must "convey with reasonable clarity to those skilled in the art that, as of the filing date sought, he or she was in possession of the invention. The invention is, for purposes of the 'written description' inquiry, whatever is now claimed." *Vas–Cath Inc. v. Mahurkar*, 935 F.2d 1555, 1563–64 (Fed. Cir. 1991); *see also Nalpropion Pharm., Inc. v. Actavis Labs. FL, Inc.*, 934 F.3d 1344, 1350 (Fed. Cir. 2019) (explaining that it "is not necessary that the exact terms of a claim be used *in haec verba* in the specification").

A claim "will not be invalidated on section 112 grounds simply because the embodiments of the specification do not contain examples explicitly covering the full scope of the claim language." *LizardTech. Inc. v. Earth Res. Mapping, Inc.*,

424 F.3d 1336, 1345 (Fed. Cir. 2005); *see also Fox Factory, Inc., v. Sram, LLC*, No. PGR2016-00043, 2017 WL 1242973, at *5 (P.T.A.B. Apr. 3, 2017) (finding that petitioner failed to show lack of written description support for claims that covered a broader range of embodiments than those disclosed in the specification). Relatedly, "[n]ot every claim must contain every limitation or achieve every disclosed purpose." *See ScriptPro LLC v. Innovation Associates, Inc.*, 833 F.3d 1336, 1342 (Fed. Cir. 2016); *see also In re Rasmussen*, 650 F.2d 1212, 1215 (CCPA 1981) (explaining "that a claim may be broader than the specific embodiment disclosed in a specification is in itself of no moment").

The Board must consider the following factors in evaluating the level of disclosure required: "the existing knowledge in the particular field, the extent and content of the prior art, the maturity of the science or technology, [and] the predictability of the aspect at issue." *Ariad Pharms., Inc. v. Eli Lilly & Co.*, 598 F.3d 1336, 1344 (Fed. Cir.2010). This is because "the patent specification is written for a person of skill in the art, and such a person comes to the patent with the knowledge of what has come before. . . . Placed in that context, it is unnecessary to spell out every detail of the invention in the specification; only enough must be included to convince a person of skill in the art that the inventor possessed the invention and to enable such a person to make and use the invention

without undue experimentation." *LizardTech, Inc. v. Earth Resource Mapping, Inc.*, 424 F.3d 1336, 1345 (Fed.Cir.2005).

Conclusory expert testimony that a specification fails to provide support for a claim is insufficient to demonstrate lack of written description. *Blue Calypso, LLC v. Groupon, Inc.*, 815 F.3d 1331, 1346 (Fed. Cir. 2016) (reversing Board decision and criticizing petitioner's expert testimony as "abstract and untethered from the context provided by the [challenged patent]").

B. Petitioners Bear the Burden of Persuasion with Respect to a Disputed Priority Date

"In an *inter partes* review, the burden of persuasion is on the petitioner to prove 'unpatentability by a preponderance of the evidence,' 35 U.S.C. § 316(e), and that burden never shifts to the patentee." *Dynamic Drinkware, LLC v. Nat'l Graphics, Inc.*, 800 F.3d 1375, 1378 (Fed. Cir. 2015). In particular, the burden of proving that an asserted reference pre-dates an alleged priority date rests on the petitioner, not the patentee. *Id.*

Initially, a petitioner has the burden of persuasion, and the burden of production (i.e., coming forward with evidence) on all issues. *See Dynamic Drinkware*, 800 F.3d 1379. If the petitioner provides *prima facie* evidence that its burden has been met, the burden of production—but not the burden of persuasion—shifts to the patentee on some issues such as the determination of a

patent's priority date. *Id.* at 1380. If the patentee meets this burden by providing evidence of an earlier priority date, the Board must evaluate the petitioner's arguments in light of all the evidence to determine if the petitioner has met its burden of persuasion. *Id.*; *see, e.g., Boart Longyear Ltd. v. Australian Mud Co. Pty Ltd.*, No. IPR2019-01129, 2019 WL 6442439, at *14 (P.T.A.B. Nov. 25, 2019) (describing this procedure).

Citing *PowerOasis*, Petitioners mistakenly assert that a patent owner bears the burden of persuasion with respect to establishing a priority date. In doing so, Petitioners confuse the burden of *production* with the burden of *persuasion*. The Federal Circuit has already rejected this misinterpretation of *PowerOasis*. *See Tech. Licensing Corp. v. Videotek, Inc.*, 545 F.3d 1316, 1326–27 (Fed.Cir.2008) (explaining that *PowerOasis* held that the burden of *production* can shift to the patentee, not the burden of *persuasion*).

VI. Petitioners Have Failed to Show that '147 Patent Claims 18 and 19 Are Not Entitled to the Earliest Claimed Priority Date.

Petitioners contend that neither the cited provisional application (Ex. 1020) nor the first non-provisional application (Ex. 1021) provide written description support from the requirements in claims 18 and 19 that the promoter be separately injected into a mercury-containing gas or transport gas. Petitioners are wrong.

Because Petitioners bear the burden of proof on the issue of priority, and as a matter of due process, the Board's analysis is limited to this issue. *In re Magnum Oil Tools Int'l, Ltd.*, 829 F.3d 1364, 1381 (Fed. Cir. 2016) ("Given that framework, we find no support for the PTO's position that the Board is free to adopt arguments on behalf of petitioners that could have been, but were not, raised by the petitioner during an IPR. Instead, the Board must base its decision on arguments that were advanced by a party, and to which the opposing party was given a chance to respond.").

For the reasons provided below, Petitioners have not met their burden of establishing a *prima facie* case for unpatentability. Even if they had met that burden, the portions of the applications cited below demonstrate that Petitioners are unable to meet their ultimate burden of persuasion on this issue.

A. The Provisional Application Supports '147 Claims 18 and 19.

The provisional application provides a chemical model to help explain how this invention works:

> We now teach that the formation of the new bromide compound with carbon increases the reactivity of the carbon forms toward mercury and other pollutants. The resulting bromide compound is uniquely suited to facilitate oxidation of the mercury. The effectiveness of the oxidation results from the promotion effect of the halide exerted on the developing positive charge on the mercury during the oxidation, known in the chemical art as a specific catalytic effect. Thus, as the mercury electrons are drawn toward the positive carbon, the halide anion electrons are pushing in from the other side, which stabilizes the

> positive charge developing on the mercury and lowers the energy requirement for the oxidation process. Bromide is especially reactive, owing to the highly polarizable electrons in the outer 4p orbitals of the ion. Thus, adding HBr or Br2 to the carbon forms a similar carbon bromide, in which the positive carbon oxidizes the mercury with the assistance of the bromide ion.

Ex. 1020 at 9. Thus, the inventors explained that the benefits of the claimed promoted sorbent are obtained by forming a carbon-bromine bond out of activated carbon and a bromine ion, i.e., Br-. They further explain that this Br- ion may be supplied by adding HBr or Br_2 to the carbon. This is further illustrated in the diagram below:

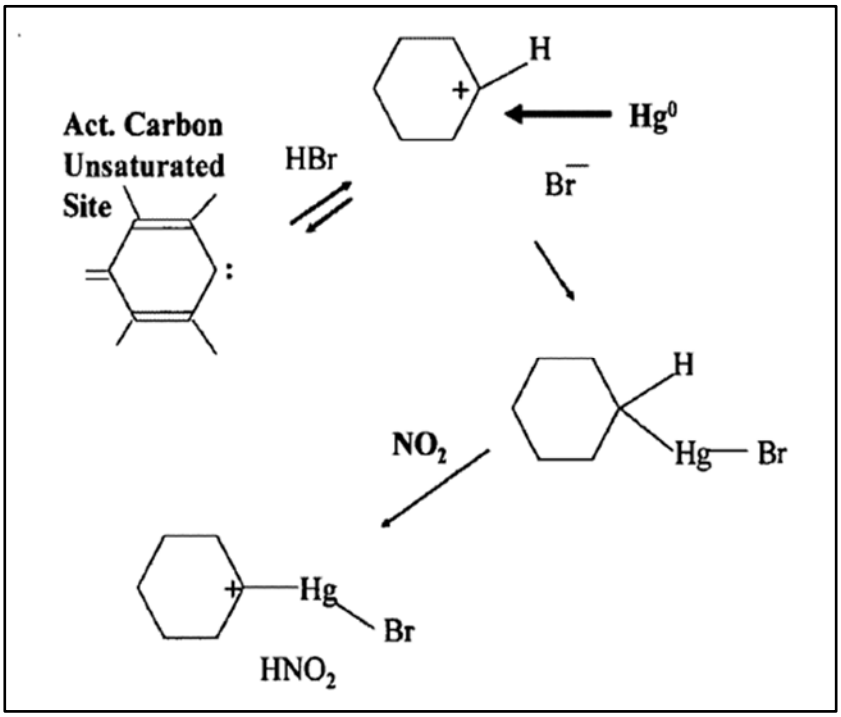

As shown above, activated carbon interacts with HBr. This results in carbon bonded with the hydrogen atom, and a bromine ion Br-. When these components

are mixed into mercury-containing gas, the mercury (Hg) is drawn toward the carbon and the bromine ion, creating a stable bond. Thus, the inventors explained that mercury is captured by intermixing activated carbon and bromine ions with the mercury.

Having described this chemical model, the inventors also described various implementations of their theory, including the example provided below:

> FIG. 2 is a block diagram illustrating the use of the invention in a coal fueled facility. Of course, the invention can also be used in any other desired type of facility. FIG. 2 shows a boiler for burning pulverized coal. The facility utilizes various devices to clean the exhaust of the boiler. In this example, a baghouse or ESP is used to collect particulates in the exhaust. A scrubber and sorbent bed are also used to remove undesired constituents from the flue gas stream, before being fed to the stack. ***In the example shown, the sorbent is injected into the flue gas after the boiler. The additive can be injected where desired (e.g., before, after, or within the boiler).***

Id. And as illustrated below:

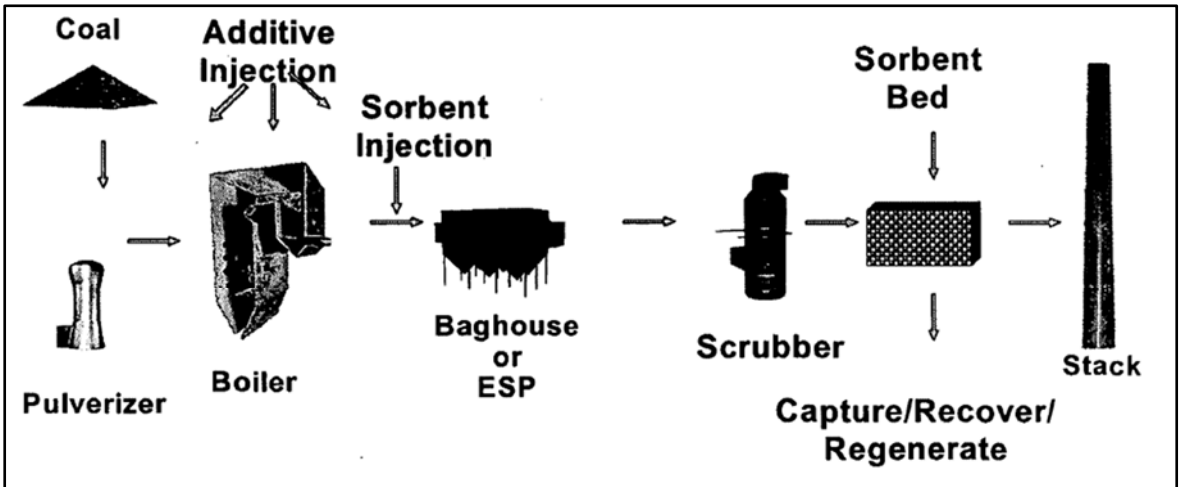

FIG. 2

Id. In this example, the bromine-containing additive is mixed with powdered (pulverized) coal (which inherently contains mercury) andair and injected into the combustion chamber (which also contains mercury from the combusted coal). Later, activated carbon sorbent is injected into the mercury-containing flue gas to cause the promotion reaction described above. This reaction occurs "in-flight" in the gas as it is transported to the baghouse or ESP. Thus, the provisional application provides support for claims 18 and 19.

As another example, the provisional application describes another "in-flight" technique where bromine is injected into a gas stream containing the carbon sorbent. Ex. 1020 at 14 ("A unique, nonobvious technique for preparation of the treated carbon is through combining the treatment system with the carbon injection system at the end-use site. With this technique, the halogen is introduced to the carbon-air mixture in the transport line (or other part of the sorbent storage and injection system)."). This gas stream is a "transport gas" as required by claim 19, e.g., it is described as being passed through a "transport line."

This gas stream can also be a "mercury-containing gas" as required by claim 18. For example, the provisional application describes recycling the injected sorbent back through the transport line. *See, e.g.,* Ex. 1020 at 14 (explaining that this in-flight method may re-use the carbon sorbent); *id.* at 13 ("further disposal reduction is made possible by recycling and reusing the sorbent that is produced

using this technology"); *id.* 5 ("Carbon is regenerated from previous usage cycle and recycled"); *see also id.* at 6-8 (describing examples 6 and 10 where carbon and bromine are reacted in flight and the carbon is recycled). Because this recycled sorbent contains mercury from its use in the flue gas, this provides "injecting separately the bromine containing promoter into a gas stream whereby in-flight reaction produces the promoted brominated sorbent," as required by claim 17, and the gas stream is a "mercury containing gas" as required by claim 18.

B. Petitioners Misinterpret the Provisional Application.

According to Petitioners, the provisional application fails to support claims 18 and 19, because they contend example 9 (in a list of 15) refers to a non-bromine additive. This assertion is a red herring as Patent Owner does not rely on example 9 to demonstrate written description support. Moreover, Petitioners have misinterpreted example 9.

As noted above, the inventors' chemical model for the promotion reaction relies on a combination of two components—bromine ions and activated carbon sorbent. It strains credulity to think that a POSITA would conclude that example 9 overrides that disclosure and teaches that the "additive" in figure 2 actually refers to a non-bromine additive. This argument also fails to address examples where the mercury containing gas is provided as a result of sorbent recycling.

Moreover, example 9 is not referring to a non-bromine additive. Example 9 appears in an "Outline of Examples of the Invention." Ex. 1020 at 5. Each of examples 1-8 contain references to bromine additives and/or techniques for using bromine additives. Example 9 refers to "The process of using additives (1-8) in conjunction with sorbents. . . ." and it adds "[t]he additive is a compound comprised of Group I or II elements, such as Ca, Na, and others." In other words, the additive is CaBr, NaBr, or another similar compound. This is confirmed by the fact that example 9 refers to the formation of "mercuric bromide," which can occur only when the additive contains at least some bromine atoms. Thus, even if the inventors had intended example 9 to redefine the word "additive"—they did not—it would not exclude the use of bromine containing additives.

C. The '163 and '595 Applications Support the '147 Claims.

The intervening applications similarly disclose separately injecting promoter into a mercury containing gas. For purposes of this dispute, the '595 and '163 applications contain substantively identical disclosures. For ease of reading, patent owner refers to the '163 application below. Ex. 1021. The '163 application discloses the same chemical model as the provisional application (fig. 2; ¶¶ 52-53), as well as techniques for in-flight promotion of sorbents (¶¶ 20, 55-56, 107). In particular, the '163 application describes various exemplary embodiments of claims 18 and 19.

For example, Figure 3 depicts activated carbon reservoir 110, halogen reservoirs 120 and 130, and injection point 116 where these materials are injected together into a mercury containing gas 15. *Id.* at ¶ 55-56. The ’163 application further explains that the invention is not limited to this single point depiction, but may also encompass multiple injection points, i.e. a bromine injection point and a sorbent injection point. *Id.* at ¶ 56 (“For clarity, single injection points 116 or 119 are shown in Figure 3, although one skilled in the art will understand that multiple injection points are within the scope of the present invention.”). This multiple injection point embodiment satisfies the requirement of “injecting separately the bromine containing promoter into a gas stream.”

In addition, the ’163 application also discloses in-flight promotion using recycled sorbent. Petitioners focus on their annotated version of figure 3:

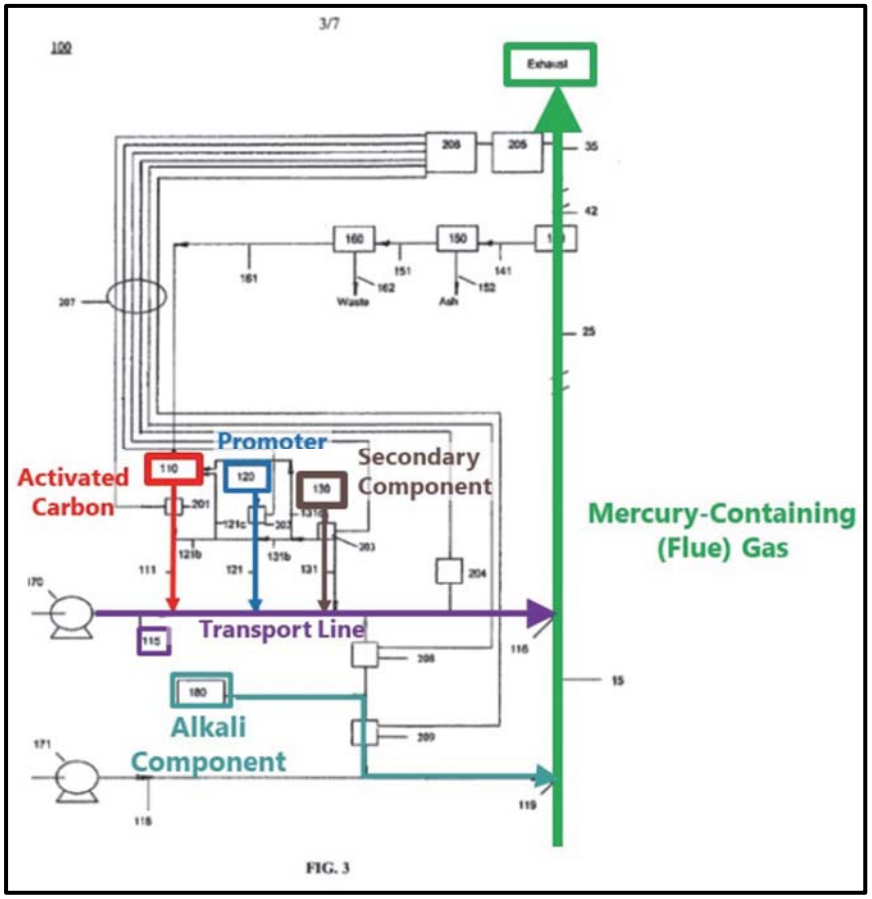

However, they fail to mention the sorbent recycling system depicted in the figure:

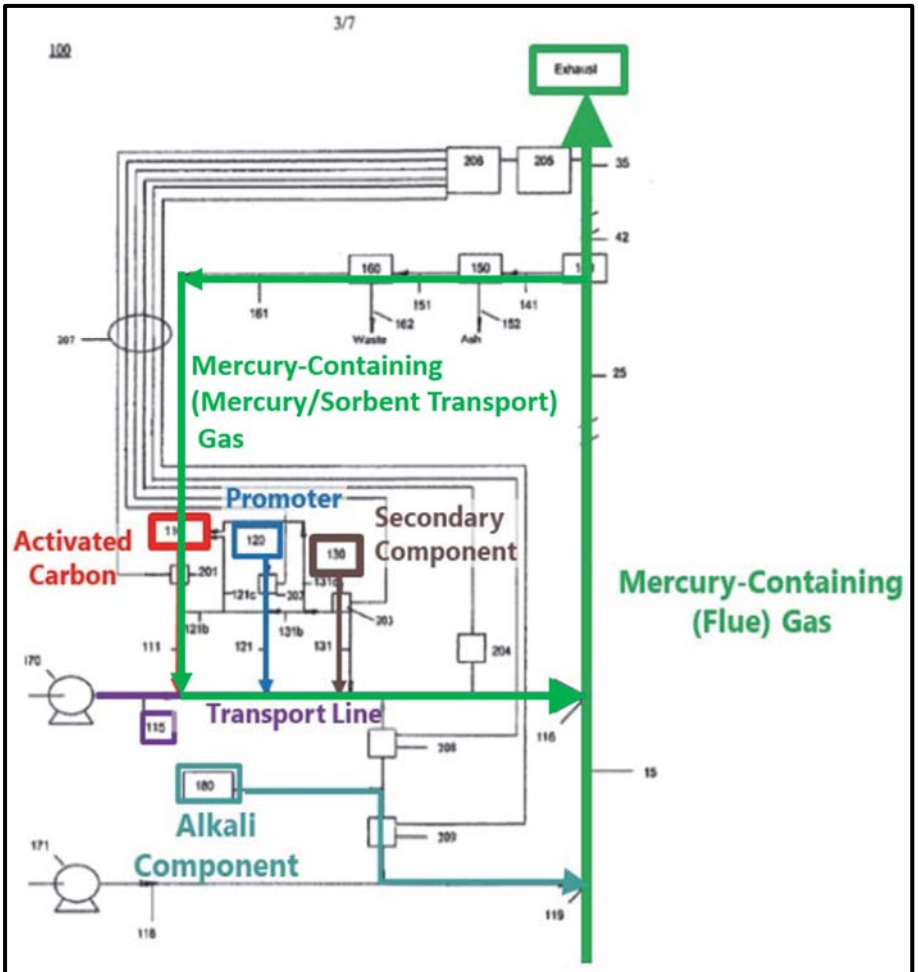

See also id. at ¶ 59 (describing separators 140 and 150 and regenerator 160). The '163 patent further explains:

> [P]articulate activated carbon sorbent with a mass mean size greater than 40 μm is injected into the gas stream, mercury is removed from the gas by the sorbent particles, the sorbent particles are separated from the ash particles on the basis of size, and the sorbent particles are re-injected to the gas stream.

Id. at ¶ 26. When such a recycling system is in use, a transport gas is used to "re-inject" used sorbent back into the transport line for sorbent and promoter. As a

result, the transport gas is necessarily a mercury-containing gas because it contains the mercury recycled with the used sorbent. As shown in figure 3, bromine promoter is then separately injected into this mercury-containing transport gas as required by claims 18 and 19.

Petitioners fail to prove lack of written description support both because they disregard the portions of the specification cited above, and also because they rely on their erroneous claim construction position. For example, Petitioners assert that figure 1 depicts mixing two different batches of promoter and sorbent and injecting them into mercury-containing gas through different paths:

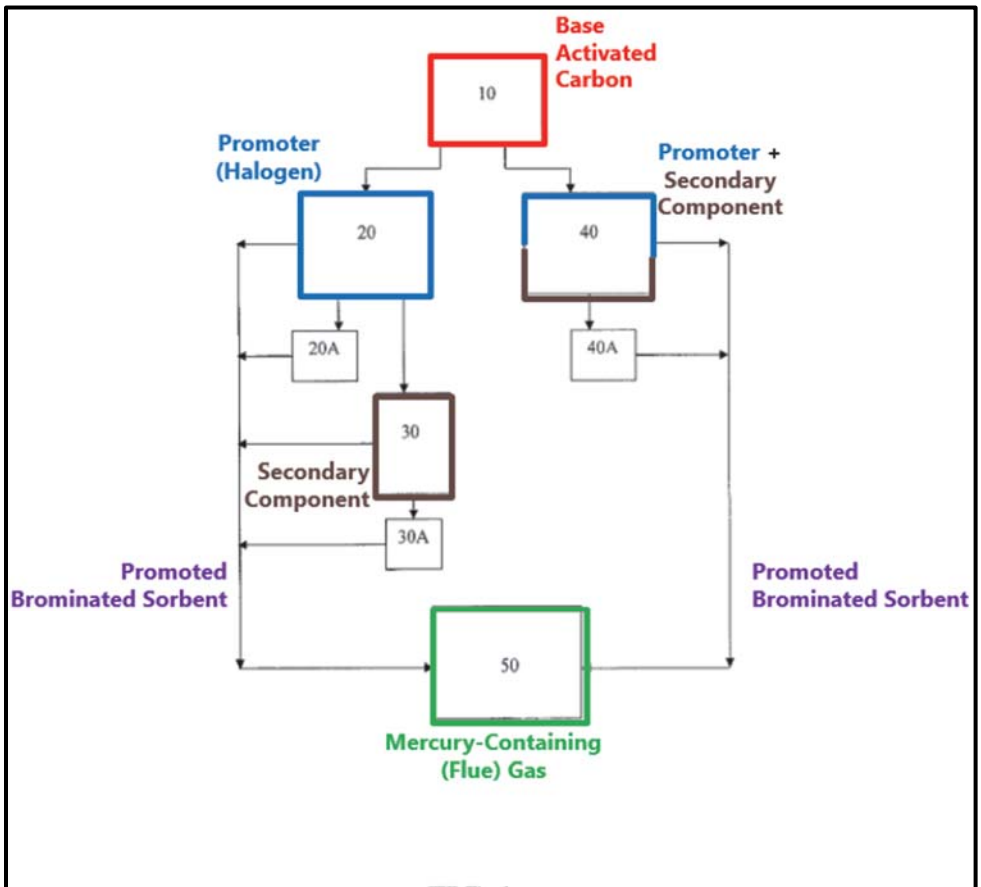

FIG. 1

According to Petitioners, this is an example of non-separate injection of bromine. However, under the correct construction of the claim language, this embodiment practices claim 17. That is, the promoter 20 in the left path is injected into the mercury-containing gas 50 separately from the activated carbon sorbent in the right path. While the transport line for promoter 20 will also contain some activated carbon, the addition of an unclaimed element does not exclude this embodiment from the scope of the claims. Thus, Petitioners have failed to prove that '147 claims 18 and 19 lack written description support in the parent applications.

ARGUMENT FROM IPR2020-00928

VII. Conclusion

For the reasons provided above, the Board should conclude that Petitioners have failed to meet their burden and thus deny the Petition.

Dated: September 4, 2020

Respectfully submitted,

Midwest Energy Emissions Corp.

By */Hamad M. Hamad/*
Hamad M. Hamad, Reg. No. 64,641
Justin T. Nemunaitis (*pro hac pending*)
CALDWELL CASSADY CURRY, P.C.
2121 N. Pearl St., Ste. 1200
Dallas, Texas 75201
Telephone: 214.888.4848
Facsimile: 214.888.4849
hhamad@caldwellcc.com
jnemunaitis@caldwellcc.com
midwest@caldwellcc.com

CERTIFICATE OF SERVICE UNDER 37 C.F.R. § 42.6 (e)(4)

It is hereby certified that on this 4th day of September, 2020, a copy of the foregoing document was served via electronic mail, as previously consented to by Petitioner upon the following counsel of record:

Brian W. Oaks (Lead Counsel)
David J. Tobin (Back-up Counsel)
Elizabeth D. Flannery (Back-up Counsel)
Thomas B. Carter (Back-up Counsel)
Baker Botts L.L.P.

Brian.oaks@bakerbotts.com
David.tobin@bakerbotts.com
DLBB-ME2C-IPR@bakerbotts.com

Date: September 4, 2020

/Hamad M. Hamad/
Hamad M. Hamad, Reg. No. 64,641

CERTIFICATE OF COMPLIANCE WITH TYPE-VOLUME LIMITATION, TYPEFACE REQUIREMENTS, AND TYPE STYLE REQUIREMENTS

This Preliminary Response complies with the type-volume limitation of 14,000 words, excluding the parts exempted by 37 C.F.R. § 42.24(b).

This Preliminary Response complies with the general format requirements of 37 C.F.R. § 42.6(a) and has been prepared using Microsoft® Word 2016 in 14 point Times New Roman.

Date: September 4, 2020

/Hamad M. Hamad/
Hamad M. Hamad, Reg. No. 64,641