IN THE UNITED STATES DISTRICT COURT FOR THE DISTRICT OF DELAWARE

THROUGHTEK CO., LTD. and THROUGHTEK TECHNOLOGY (SHENZHEN) CO., LTD, Plaintiffs, v. REOLINK INNOVATION INC., SHENZHEN REOLINK TECHNOLOGY CO., LTD., AMAZON.COM INC., COSTCO WHOLESALE CORPORATION, EBAY INC., HOME DEPOT USA INC., MICRO CENTER INC., SAM'S WEST INC., and WALMART INC., Defendants.	**JURY TRIAL DEMANDED** **COMPLAINT FOR PATENT INFRINGEMENT**

PLAINTIFF'S ORIGINAL COMPLAINT FOR PATENT INFRINGEMENT

Plaintiffs ThroughTEK Co., Ltd. ("ThroughTEK Taiwan") and ThroughTEK Technology (Shenzhen) Co., Ltd. ("ThroughTEK Shenzhen"), by and through their attorneys, hereby allege for their patent infringement Complaint against Defendants Reolink Innovation Inc. ("Reolink

REOLINK 1018

USA"), Shenzhen Reolink Technology Co., Ltd. ("Reolink China"), Amazon.com Inc. ("Amazon"), Costco Wholesale Corporation, eBay Inc., Home Depot USA Inc. ("Home Depot"), Micro Center Inc. ("Micro Center"), Sam's West Inc. ("Sam's Club"), and Walmart Inc. ("Walmart") as follows:

PRELIMINARY STATEMENT

1. This is an action for infringement of Plaintiffs' United States Patent No. 9,727,655 ("the '655 Patent") under the Patent Act, 35 U.S.C. § 271, based on Defendants' unauthorized commercial manufacture, use, importation, offer for sale, and sale of network monitoring devices including, but not limited to, network cameras and network video recorders ("NVRs") in the United States.

2. Defendants have infringed and continue to infringe, have induced and continue to induce infringement of, and have contributorily infringed and continue to contributorily infringe, one or more claims in the '655 Patent at least by making, using, importing, selling and offering to sell the network cameras and NVRs.

3. ThroughTEK Taiwan and ThroughTEK Shenzhen are the legal owners by assignment of '655 Patent, which was duly and legally issued by the United States Patent and Trademark Office (USPTO). ThroughTEK Taiwan and ThroughTEK Shenzhen seek injunctive relief and monetary damages.

PARTIES

4. Plaintiff ThroughTEK Co., Ltd. ("ThroughTEK Taiwan") is a corporation organized and existing under the laws of Taiwan with its principal place of business at 9F, No. 364, Sec. 1, Nangang Rd., Nangang Dist., Taipei City 11579, Taiwan.

5. Plaintiff ThroughTEK Technology (Shenzhen) Co., Ltd. ("ThroughTEK Shenzhen") is a corporation organized and existing under the laws of China with its principal place of business at Yi Cheng Huan Zhi Center Tower A, Suite 1103, Longhua Ren Min Road, Longhua District, Shenzhen, Guangdong, China.

6. Upon information and belief, defendant Reolink Innovation Inc. ("Reolink USA") is a corporation organized and existing under the laws of Delaware. Reolink USA's registered agent is Corporation Service Company located at 251 Little Falls Drive, Wilmington, DE 19808.

7. Upon information and belief, defendant Shenzhen Reolink Technology Co. Ltd ("Reolink China") is a corporation organized and existing under the laws of China with its principal place of business at Floor 2, Building 2, Factory Building, Yuanling Industrial Area, Shangwu Community, Shiyan Sub-district, Bao'an District, Shenzhen, Guangdong, China.

8. Upon information and belief, defendant Amazon.com, Inc. ("Amazon") is a corporation organized and existing under the laws of Delaware with its principal place of

business at 410 Terry Ave. N, Seattle, WA 98109. Amazon's registered agent is Corporation Service Company located at 251 Little Falls Dr., Wilmington, DE 19808.

9. Upon information and belief, defendant Costco Wholesale Corporation ("Costco") is a corporation organized and existing under the laws of Delaware with its principal place of business at 999 Lake Dr., Issaquah, WA 98027. Costco's registered agent is The Corporation Trust Company located at Corporation Trust Center, 1209 Orange St., Wilmington, DE 19801.

10. Upon information and belief, defendant eBay Inc. ("eBay") is a corporation organized and existing under the laws of Delaware with its principal place of business at 2025 Hamilton Ave., San Jose, CA 95125. eBay's registered agent is The Corporation Trust Company located at Corporation Trust Center, 1209 Orange St., Wilmington, DE 19801.

11. Upon information and belief, defendant Home Depot U.S.A. Inc. ("Home Depot") is a corporation organized and existing under the laws of Delaware with its principal place of business at 2455 Paces Ferry Rd., Atlanta, GA 30339-4024. Home Depot's registered agent is Corporation Service Company located at 251 Little Falls Dr., Wilmington, DE 19808.

12. Upon information and belief, defendant Micro Center Inc. ("Micro Center") is a corporation organized and existing under the laws of Delaware with its principal place of business at 4119 Leap Rd. Hilliard, OH 43026. Micro Center's registered agent is Legal

Services, LLC, located at 1013 Centre Rd. #403s, Wilmington, DE 19805.

13. Upon information and belief, defendant Sam's West Inc. ("Sam's Club") is a corporation organized and existing under the laws of Delaware with its principal place of business at 702 SW 8th St., Bentonville, AR 72716. Sam's Club's registered agent in the State of Delaware is The Corporation Trust Company located at Corporation Trust Center, 1209 Orange St., Wilmington, DE 19801.

14. Upon information and belief, defendant Walmart Inc. ("Walmart") is a corporation organized and existing under the laws of Delaware with its principal place of business at 702 SW 8th St #555 Bentonville, AR 72716. Walmart's registered agent is The Corporation Trust Company located at Corporation Trust Center, 1209 Orange St., Wilmington, DE 19801.

JURISDICTION AND VENUE

15. This is a civil action for patent infringement arising under the patent laws of the United States, 35 U.S.C. § 271 *et seq.*

16. This court has subject matter jurisdiction over the matters asserted herein under 28 U.S.C. §§ 1331 and 1338(a).

17. The Defendants are subject to this Court's specific or general personal jurisdiction pursuant to due process and/or the Delaware Long Arm Statute, by virtue of at least

their substantial business conducted in this forum, directly and/or through intermediaries, such as their retailer customers, including having solicited business in the State of Delaware, transacted business within the State of Delaware and attempting to derive financial benefit from residents of the State of Delaware, including benefits directly related to the instant patent infringement causes of action set forth herein.

18. Defendants directly and/or through intermediaries have advertised, offered to sell, sold and/or distributed products made with the patented technology in this District. Further, Defendants directly and/or through intermediaries, such as their retailer customers, have purposefully and voluntarily placed such products in the stream of commerce knowing and expecting them to be purchased and used by consumers in this District.

19. Defendants have purposefully and voluntarily placed the network cameras and NVRs on nationwide chain stores or e-commerce websites with the expectation that the infringing products will be used and sold in this District. These infringing products have been and continue to be used and sold in this District.

20. Venue is proper in this judicial district pursuant to 28 U.S.C. §§ 1391(b) and 1400(b) at least because the Defendants has committed acts of infringement in this District.

21. Defendants Reolink China is a non-US resident. Venue is proper in this District pursuant to 28 U.S.C. § 1391(c)(3).

UNITED STATES PATENT NUMBER 9,727,655

22. United States Patent No. 9,727,655 is titled "Searching System, Method and P2P Device for P2P Device Community". The '655 Patent claims the foreign priority to the Taiwanese Application 103134585 filed on October 3, 2014.

23. Plaintiffs are the joint owners of the '655 Patent. A true and correct copy of the '655 Patent is attached hereto as Exhibit A.

24. The '655 Patent claims patent-eligible subject matter and is valid and enforceable.

25. Defendants are not licensed under the '655 Patent, either expressly or implicitly, nor do they enjoy or benefit from any rights in or to the '655 Patent.

26. Generally speaking, the '655 Patent relates to a device and/or method for providing and/or facilitating searching content on a P2P (point-to-point) device.

27. By way of example, claim 1 of the '655 Patent reads as follows:

> A searching system for a P2P (peer-to-peer) device community, for receiving a search request sent from at least one user's device, the searching system comprising:
>
> at least one P2P device community, wherein each the P2P device community includes at least one P2P device, wherein each the P2P device respectively comprises at least one file data, and each the file data comprises a content data and an indexed data;
>
> at least one online server connecting to the P2P device community, each the online server includes a topology data table, the topology data table being recorded with a link data between each of the P2P devices of the P2P device community; and
>
> at least one content management server connecting to the P2P device community and the online server respectively, each the content management server includes a search

engine, an index database, and a user's device management unit, wherein the index database records the indexed data of each the P2P device of the P2P device community, the user's device management unit receives the search request sent from the user's device, the search engine searches the index database to generate a search result based on the search request and then returning the search result to the user's device, wherein the user's device obtains the link data of the P2P device within the P2P device community according to the topology data table of the online server and the search result.

28. Figure 2 the '655 Patent show diagrams of an exemplary embodiment of the invention, illustrating how any of user devices 51-56 can search the content on any of the P2P devices 41-46 of the P2P community 40 via the on-line server 20 and content management server 30.

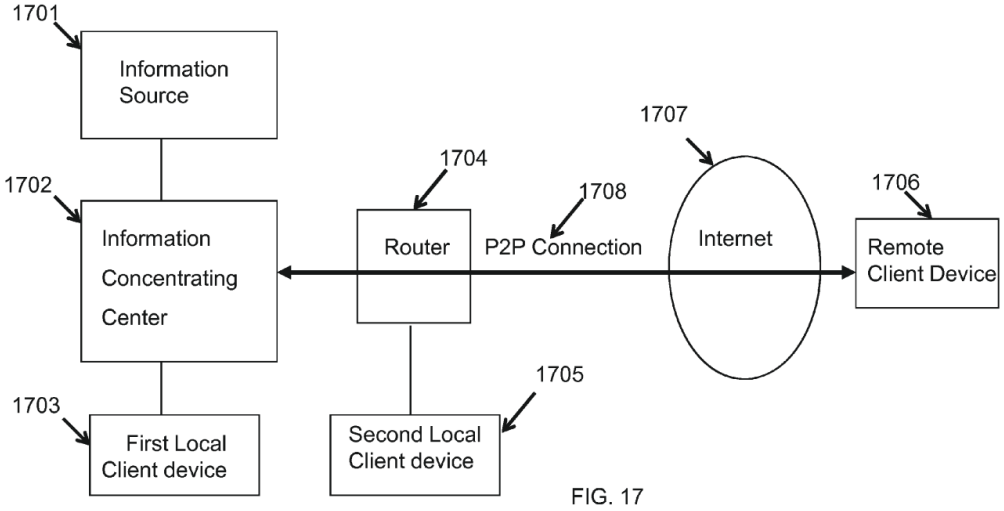

FIG. 17

29. In the embodiment described above, a user device, such as a cell phone, can query the content on any of the P2P devices, such as a P2P surveillance camera or a P2P NVR.

THE ACCUSED INSTRUMENTALITIES

30. Defendants manufacture, sell, offer to sell, facilitate to sell, facilitate to offer to

sell, or import the network monitoring devices, and these network monitoring devices facilitate searching a content on a P2P device of a P2P community.

31. These network monitoring devices include, but are not limited to, P2P cameras and network devices that support these functions ("the Accused Instrumentalities").

32. Hereafter, the Accused Instrumentalities include any network device establishing a content search on a P2P device of a P2P community via any intermediary server, any network device supporting content search on a P2P device of a P2P community via any intermediary server, any network device forwarding information for facilitating content search on a P2P device of a P2P community, any network device supporting forwarding information for facilitating content search on a P2P device of a P2P community, and any software for supporting any of the operations stated.

ACTS GIVING RISE TO THIS ACTION

A. Defendants Reolink USA and Reolink China

33. Upon information and belief, Defendants Reolink USA and Reolink China manufacture, sell, offer to sell, facilitate to sell, or facilitate to offer to sell the Accused Instrumentalities in United States, or import the Accused Instrumentalities into the United States.

34. Upon information and belief, Defendants Reolink USA and Reolink China directly sell or offer to sell the Accused Instrumentalities, including but not limited to the product model Argus series IP camera, the PoE (Power over Ethernet) camera, TrackMix series camera, battery-powered camera, solar-powered camera, and network video recorder (NVR).

35. Upon information and belief, the Accused Instrumentalities, including, but not

limited to, the product model Argus series IP camera, the PoE camera, TrackMix series camera, battery-powered camera, solar-powered camera, and NVR are sold through retail channels including, but not limited to, Amazon, Costco, eBay, Home Depot, Micro Center, Sam's Club, and Walmart. These retail channels are nationwide chain stores and e-commerce companies, whose sales websites can be accessed by any customer in the United States.

36. Defendants Reolink USA and Reolink China provide an App for consumers to establishing a P2P connection and to operate each Accused Instrumentality via the intermediary servers.

37. The Accused Instrumentalities are a P2P devices and provide a P2P connection to a user device via the App provided by Defendants Reolink USA and Reolink China, thereby facilitating content search on the P2P device.

38. The Accused Instrumentality can transmit information to a user device based on the established P2P connection.

39. Exhibit B attached hereto provides a claim chart for mapping independent claim 1 of the '655 Patent onto the battery-powered Argus 2E IP camera based on the conducted lab test. Exhibit C attached hereto is a user manual for the Argus series IP camera.

40. Exhibit D attached hereto is a user manual for the PoE camera, which shows similar functions if not identical as the tested Argus series IP camera.

41. A cease-and-desist letter was sent to Defendant Reolink USA accusing it of infringement of the '655 Patent on August 15, 2024.

B. Defendants Amazon, Costco, eBay, Home Depot, Micro Center, Sam's Club,

and Walmart

42. Upon information and belief, Defendants Amazon, Costco, eBay, Home Depot, Micro Center, Sam's Club, and Walmart sell, facilitate to sell, offer to sell, and/or facilitate to offer to sell the Accused Instrumentalities for at least one of the Co-Defendants in United States.

43. Defendants Amazon, Costco, eBay, Home Depot, Micro Center, Sam's Club, and Walmart are retailers or/and an authorized retailers for the Accused Instrumentalities for at least one Co-Defendant.

44. Plaintiffs sent notices of infringement regarding the '655 Patent to Defendants Amazon, Costco, eBay, Home Depot, Micro Center, Sam's Club, and Walmart on August 15, 2024. Plaintiffs have also sent notices of infringement in regard to the '655 Patent to Defendant Sam's West Inc. on August 29, 2024.

COUNT 1: DIRECT INFRINGEMENT

45. All preceding paragraphs are incorporated by references as if fully set forth herein.

46. Defendants directly infringe the '655 Patent by manufacturing, selling, and/or offering to sell the Accused Instrumentalities in the United States, and/or by importing the Accused Instrumentalities into the United States, and use and practice the patented technologies with the Accused Instrumentalities.

47. Defendants were explicitly notified in regard the infringement of the '655 Patent.

48. Defendants have continued manufacturing, selling, offering to sell, and/or importing the Accused Instrumentalities which use/practice the patented technologies.

49. Defendants have continued using and practicing the patented technologies by manufacturing, selling, offering to sell, and/or importing the Accused Instrumentalities.

50. Defendants use, manufacture and sale of the Accused Instrumentalities without proper license or authorization from Plaintiffs constitutes infringement of the '655 Patent under 35 U.S.C. § 271(a).

51. Upon information and belief, Defendants' infringement has been willful.

COUNT 2: INDUCING INFRINGEMENT

52. All preceding paragraphs are incorporated by references as if fully set forth herein.

53. Defendants actively induce infringement of the '655 Patent by selling, facilitating to sell, offering to sell, and/or facilitating to offer to sell the Accused Instrumentalities to consumers.

54. By selling, facilitating to sell, offering to sell, and/or facilitating to offer to sell the Accused Instrumentalities to consumers, Defendants induce consumers to use the patented technologies without proper license or authorization from the Plaintiffs.

55. Defendants were explicitly notified in regard the infringement of the '655 Patent.

56. Defendants have continued inducing consumers to use the patented technologies without proper license or authorization from the Plaintiffs by continuing selling, facilitating to sell, offering to sell, and/or facilitating to offer to sell the Accused

Instrumentalities to consumers.

57. Defendants' inducement of consumers to use the technologies disclosed and claimed in the Patents in Suit without proper license or authorization from Plaintiffs constitutes infringement of the '655 Patent under 35 U.S.C. § 271(b).

58. Upon information and belief, Defendants' infringement has been willful.

COUNT 3: CONTRIBUTORY INFRINGEMENT

59. All preceding paragraphs are incorporated by references as if fully set forth herein.

60. Defendants actively infringe the '655 Patent by selling, facilitating to sell, offering to sell, and/or facilitating to offer to sell the Accused Instrumentalities.

61. Along with selling the network surveillance camera and DVR, Defendants provide the consumers with the App for operating the network surveillance camera and DVR; the App is to be downloaded onto the consumers' phones. The network surveillance camera and the DVR are for using/practicing the patented methods for establishing the P2P connection and to operate the network surveillance camera and/or NVR.

62. The App is solely for the purpose of practicing the patented technologies. The App constitutes a material part of the patented technologies, which is specially made or especially adapted for use in an infringement of the patented technologies. The App is not a staple article or commodity of commerce suitable for substantial non-infringing use.

63. Defendants were explicitly notified in regard the infringement of the ‘655 Patent.

64. Defendants have continued to contributorily infringe the Patents in Suit by selling, facilitating to sell, offering to sell, and/or facilitating to offer to sell the network surveillance camera and NVR along with the App.

65. Defendants’ continuing contributorily infringement of by selling, facilitating to sell, offering to sell, and/or facilitating to offer to sell the network surveillance camera and NVR along with the App without proper license or authorization from Plaintiffs constitutes infringement of the ’655 Patent under 35 U.S.C. § 271(c).

66. Upon information and belief, Defendants’ infringement has been willful.

PRAYER FOR REPLIEF

WHEREFORE, ThroughTEK Taiwan and ThroughTEK Shenzhen request judgment against Defendants as follows:

A. Adjudging that Defendants have directly infringed the ‘655 Patent in violation of 35 U.S.C. § 271(a);

B. Adjudging that Defendants have actively induced infringement of the ‘655 Patent in violation of 35 U.S.C. § 271(b);

C. Adjudging that Defendants have contributorily infringed the ‘655 Patent in

violation of 35 U.S.C. § 271(c);

D. Granting an injunction preliminarily and permanently enjoining Defendants, their employees, agents, officers, directors, attorneys, successors, affiliates, subsidiaries, and assigns and all of those in active concert and participation with any of the foregoing persons or entities from infringing, contributing to the infringement of, or inducing infringement, pursuant to 35 U.S.C. §283;

E. Ordering Defendants to account and pay damages adequate to compensate ThroughTEK Taiwan and ThroughTEK Shenzhen for Defendants' infringement, including pre-filing damages, pre-judgment and post-judgment interest and costs, pursuant to 35 U.S.C. § 284;

F. Ordering an accounting for any infringing sales not presented at trial and an award by the court of additional damages for any such infringing sales;

G. Finding the Defendants have willfully infringed the '655 Patent, and awarding Plaintiff all allowable damage for their willful infringement, including but not limited to an award of three times Plaintiff's actual damages pursuant to 35 U.S.C. § 284;

H. Declaring this case exceptional and awarding ThroughTEK Taiwan and ThroughTEK Shenzhen their reasonable attorney fees, pursuant to 35 U.S.C. § 285; and

I. Awarding such other and further relief as this Court deems just and proper.

Respectfully submitted,

Dated: September 12, 2024

O'KELLY & O'ROURKE, LLC

/s/ Gerard M. O'Rourke
Gerard M. O'Rourke (No. 3265)
824 N. Market Street, Suite 1001A
Wilmington, DE 19801
(302) 778-4002
gorourke@okorlaw.com

Attorneys for Plaintiffs

Of Counsel:

WPAT, P.C. Law Group Virginia

Justin King
8230 Boone Blvd. Suite 405
Vienna, VA 22182
703-639-0151
jking@wpat.com