US008764220B2

(12) **United States Patent**
Chan et al.

(10) **Patent No.: US 8,764,220 B2**
(45) **Date of Patent: Jul. 1, 2014**

(54) **LINEAR LED LIGHT MODULE**

(75) Inventors: **Chun Wah Chan**, Peachtree City, GA (US); **Anthony James Carney**, Fayetteville, GA (US); **Jerold Alan Tickner**, Newnan, GA (US); **Peter J Menard**, Arvada, CO (US); **Christopher Ladewig**, Fayetteville, GA (US); **Valerica Grigore**, Longmont, CO (US); **Bradley Stephen Garrett**, Evergreen, CO (US); **Travis William Francis Boyle**, Denver, CO (US)

(73) Assignee: **Cooper Technologies Company**, Houston, TX (US)

(*) Notice: Subject to any disclaimer, the term of this patent is extended or adjusted under 35 U.S.C. 154(b) by 193 days.

(21) Appl. No.: **13/095,349**

(22) Filed: **Apr. 27, 2011**

(65) **Prior Publication Data**

US 2011/0286207 A1 Nov. 24, 2011

Related U.S. Application Data

(60) Provisional application No. 61/328,875, filed on Apr. 28, 2010, provisional application No. 61/410,204, filed on Nov. 4, 2010.

(51) **Int. Cl.**
F21V 1/00 (2006.01)

(52) **U.S. Cl.**
USPC **362/217.02**

(58) **Field of Classification Search**
USPC 362/311.06, 217.01–217.17
See application file for complete search history.

(56) **References Cited**

U.S. PATENT DOCUMENTS

3,038,139	A	6/1962	Bonanno	
3,706,882	A	12/1972	Eby	
3,810,258	A	5/1974	Mathauser	
4,302,800	A	11/1981	Pelletier	
4,535,393	A *	8/1985	Aspenwall	362/125
4,538,214	A	8/1985	Fisher et al.	

(Continued)

FOREIGN PATENT DOCUMENTS

KR	20-2008-0004689	10/2008
KR	20-2008-0005381	11/2008
KR	20-2009-0009386	9/2009

OTHER PUBLICATIONS

International Search Report and Written Opinion for PCT/US2011/034138 mailed on Nov. 21, 2011.

(Continued)

Primary Examiner — Julie Bannan
(74) *Attorney, Agent, or Firm* — King & Spalding LLP

(57) **ABSTRACT**

A linear light emitting diode ("LED") light fixture includes LED modules that interface with one another to provide a substantially continuous array of LED's. This continuous array allows for substantially uniform light output from the LED light fixture. The LED modules can interface with one another via one or more connectors, which allow two or more LED modules to be electrically and mechanically coupled together. The connectors may be disposed beneath the LED's so that the connectors are not visible when the LED modules are coupled together. The connectors may be disposed along opposite ends of the modules to allow for end-to-end configurations of the modules and/or along side ends of the modules to allow for angled or curved configurations of the modules. The LED modules can be powered via one or more wires, magnets, or clips, which are coupled to a power source.

20 Claims, 19 Drawing Sheets

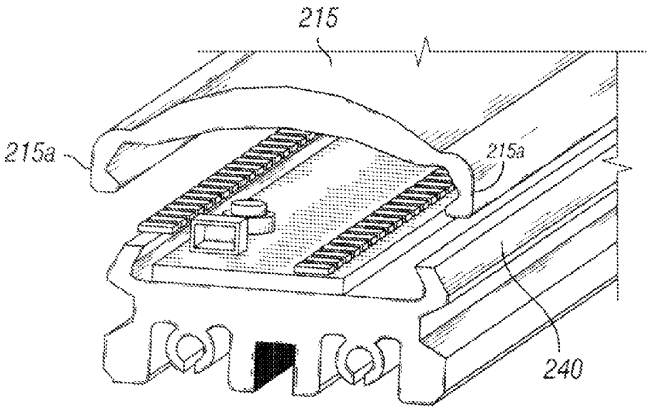

(56) **References Cited**

U.S. PATENT DOCUMENTS

4,617,612 A 10/1986 Pritchett
4,667,277 A 5/1987 Hanchar
4,719,549 A 1/1988 Apel
4,752,756 A 6/1988 Bartel
4,959,761 A 9/1990 Critelli et al.
5,154,509 A 10/1992 Wulfman et al.
5,291,039 A 3/1994 Ogata et al.
5,321,593 A * 6/1994 Moates 362/249.05
5,342,204 A 8/1994 Och
5,397,238 A 3/1995 Och
5,418,384 A 5/1995 Yamana et al.
5,660,461 A 8/1997 Ignatius
6,050,044 A 4/2000 McIntosh
6,065,849 A * 5/2000 Chen 362/101
6,176,760 B1 1/2001 Ngai
6,233,971 B1 5/2001 Ohlund
6,320,182 B1 11/2001 Hubble et al.
6,343,942 B1 2/2002 Okamoto
6,357,904 B1 3/2002 Kawashima
6,361,186 B1 3/2002 Slayden
6,367,948 B2 4/2002 Branson
6,422,716 B2 7/2002 Henrici et al.
6,426,807 B1 7/2002 Kawai et al.
6,509,840 B2 1/2003 Martineau
6,540,372 B2 4/2003 Joseph
6,561,690 B2 * 5/2003 Balestriero et al. 362/555
6,582,100 B1 6/2003 Hochstein et al.
6,585,393 B1 7/2003 Brandes
6,592,238 B2 7/2003 Cleaver et al.
6,601,970 B2 8/2003 Ueda et al.
6,612,717 B2 9/2003 Yen
6,641,284 B2 11/2003 Stopa et al.
6,641,294 B2 11/2003 Lefebvre
6,659,622 B2 12/2003 Katogi et al.
6,676,284 B1 1/2004 Wilson
6,761,472 B1 7/2004 Cleaver
6,767,111 B1 7/2004 Lai
6,776,504 B2 8/2004 Sloan et al.
6,802,626 B2 10/2004 Belfer et al.
6,882,111 B2 4/2005 Kan et al.
6,932,495 B2 8/2005 Sloan et al.
6,940,659 B2 9/2005 McLean et al.
7,063,440 B2 6/2006 Mohacsi et al.
7,066,739 B2 6/2006 McLeish
7,070,418 B1 7/2006 Wang
7,101,056 B2 9/2006 Pare
7,137,727 B2 11/2006 Joseph et al.
7,159,997 B2 1/2007 Reo et al.
7,161,189 B2 1/2007 Wu
7,163,404 B2 1/2007 Linssen et al.
7,201,511 B2 4/2007 Moriyama et al.
7,213,941 B2 5/2007 Sloan et al.
7,241,031 B2 7/2007 Sloan et al.
7,273,299 B2 9/2007 Parkyn et al.
7,290,913 B2 11/2007 Watanabe et al.
7,322,718 B2 1/2008 Setomoto et al.
7,322,828 B1 1/2008 Chiang et al.
7,322,873 B2 1/2008 Rosen et al.
7,348,604 B2 3/2008 Matheson
7,377,669 B2 5/2008 Farmer et al.
7,384,170 B2 6/2008 Skegin
7,470,055 B2 12/2008 Hacker et al.
7,478,920 B2 1/2009 Nanbu
7,506,995 B2 3/2009 Thomas et al.
7,538,356 B2 5/2009 Lai
7,549,779 B2 6/2009 Genenbacher
7,572,027 B2 8/2009 Zampini et al.
7,625,104 B2 12/2009 Zhang et al.
7,677,914 B2 3/2010 Nall et al.
7,703,941 B2 4/2010 Lee
7,726,974 B2 6/2010 Shah et al.
7,731,558 B2 6/2010 Capriola
7,789,529 B2 9/2010 Roberts et al.
7,791,089 B2 9/2010 Bisberg
7,806,569 B2 10/2010 Sanroma et al.
7,806,574 B2 10/2010 Van Laanen et al.
7,815,341 B2 10/2010 Steedly et al.
7,857,482 B2 12/2010 Reo et al.
8,052,299 B2 11/2011 Lin
2002/0093832 A1 7/2002 Hamilton
2003/0048641 A1 3/2003 Alexanderson et al.
2003/0081419 A1 5/2003 Jacob
2003/0174517 A1 9/2003 Kiraly
2003/0223235 A1 12/2003 Mohacsi et al.
2004/0076004 A1 4/2004 Smith
2004/0114355 A1 6/2004 Rizken et al.
2004/0161213 A1 8/2004 Lee
2004/0201980 A1 10/2004 Fischer et al.
2005/0146899 A1 7/2005 Joseph et al.
2005/0151708 A1 7/2005 Farmer et al.
2005/0162265 A1 7/2005 Werner et al.
2005/0264473 A1 12/2005 Sibbett
2005/0281030 A1 * 12/2005 Leong et al. 362/234
2006/0093308 A1 5/2006 Ryan
2006/0120073 A1 6/2006 Pickard et al.
2006/0146531 A1 7/2006 Reo et al.
2006/0262533 A1 11/2006 Lin et al.
2007/0047243 A1 3/2007 Hacker et al.
2007/0147030 A1 6/2007 Lee et al.
2007/0190845 A1 8/2007 Mrakovich et al.
2008/0030981 A1 2/2008 Mrakovich et al.
2008/0158878 A1 7/2008 Van Laanen et al.
2008/0170367 A1 7/2008 Lai
2008/0244944 A1 10/2008 Nall et al.
2008/0298058 A1 12/2008 Kan et al.
2009/0021936 A1 1/2009 Stimac et al.
2009/0073693 A1 3/2009 Nall et al.
2009/0101921 A1 4/2009 Lai
2009/0161371 A1 6/2009 Vukosic et al.
2009/0219713 A1 9/2009 Siemiet et al.
2009/0224265 A1 9/2009 Wang et al.
2009/0237011 A1 9/2009 Shah et al.
2009/0238252 A1 9/2009 Shah et al.
2009/0240380 A1 9/2009 Shah et al.
2009/0267533 A1 * 10/2009 Lee 315/294
2009/0279298 A1 11/2009 Mier-Langner et al.
2009/0290348 A1 11/2009 Van Laanen et al.
2009/0296381 A1 12/2009 Dubord
2009/0296412 A1 * 12/2009 Ogawa et al. 362/373
2009/0303712 A1 12/2009 Wung et al.
2009/0310335 A1 12/2009 Park
2009/0323334 A1 * 12/2009 Roberts et al. 362/247
2010/0002450 A1 1/2010 Pachler et al.
2010/0053956 A1 3/2010 Park et al.
2010/0073931 A1 3/2010 Watanabe
2010/0097804 A1 4/2010 Wung et al.
2010/0103644 A1 4/2010 Lin et al.
2010/0103664 A1 * 4/2010 Simon et al. 362/234
2010/0103672 A1 4/2010 Thomas et al.
2010/0103673 A1 * 4/2010 Ivey et al. 362/249.02
2010/0103687 A1 4/2010 Pitlor
2010/0110680 A1 5/2010 Bianco et al.
2010/0118532 A1 5/2010 Liang et al.
2010/0124067 A1 5/2010 Hente et al.
2010/0135022 A1 6/2010 Deguara
2010/0164409 A1 7/2010 Lo et al.
2010/0182782 A1 7/2010 Ladewig
2010/0182788 A1 7/2010 Luo et al.
2010/0188846 A1 7/2010 Oda et al.
2010/0195322 A1 8/2010 Kawakami et al.
2010/0201269 A1 8/2010 Tzou et al.
2010/0214747 A1 8/2010 Jacobs et al.
2010/0220479 A1 9/2010 Yamashita et al.
2010/0226125 A1 9/2010 Liao et al.
2010/0232154 A1 9/2010 Chen
2010/0254134 A1 10/2010 McCanless
2010/0271804 A1 10/2010 Levine
2010/0271834 A1 10/2010 Muessli
2010/0277098 A1 11/2010 Sarna
2010/0277666 A1 11/2010 Bertram et al.
2010/0277913 A1 11/2010 Ward
2010/0308350 A1 12/2010 Bisberg

(56) **References Cited**

U.S. PATENT DOCUMENTS

2011/0019417	A1	1/2011	Van Laanen et al.	
2011/0157893	A1	6/2011	Ngai et al.	
2011/0280010	A1*	11/2011	Ou et al.	362/217.02

OTHER PUBLICATIONS

International Search Report and Written Opinion for PCT/US2011/034133 issued on Nov. 21, 2011.

* cited by examiner

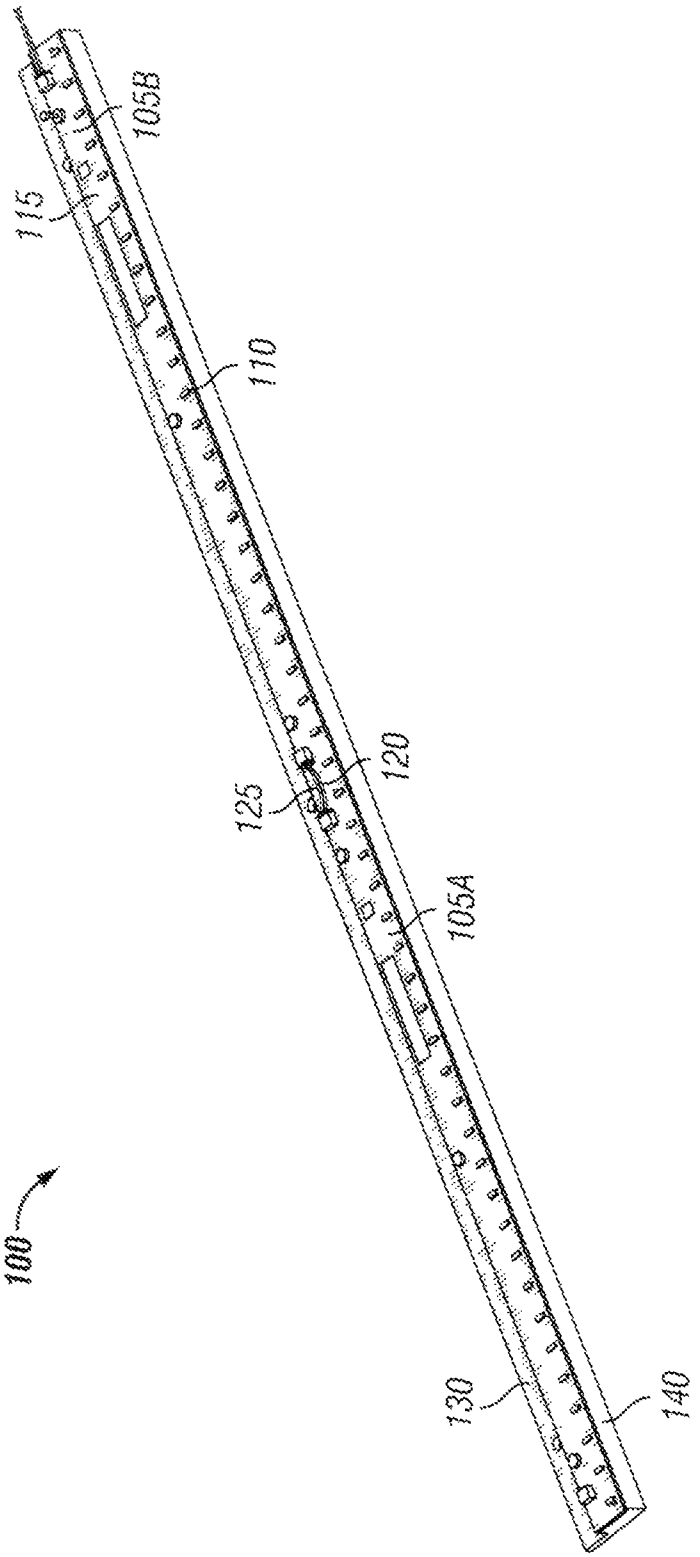

FIG. 1

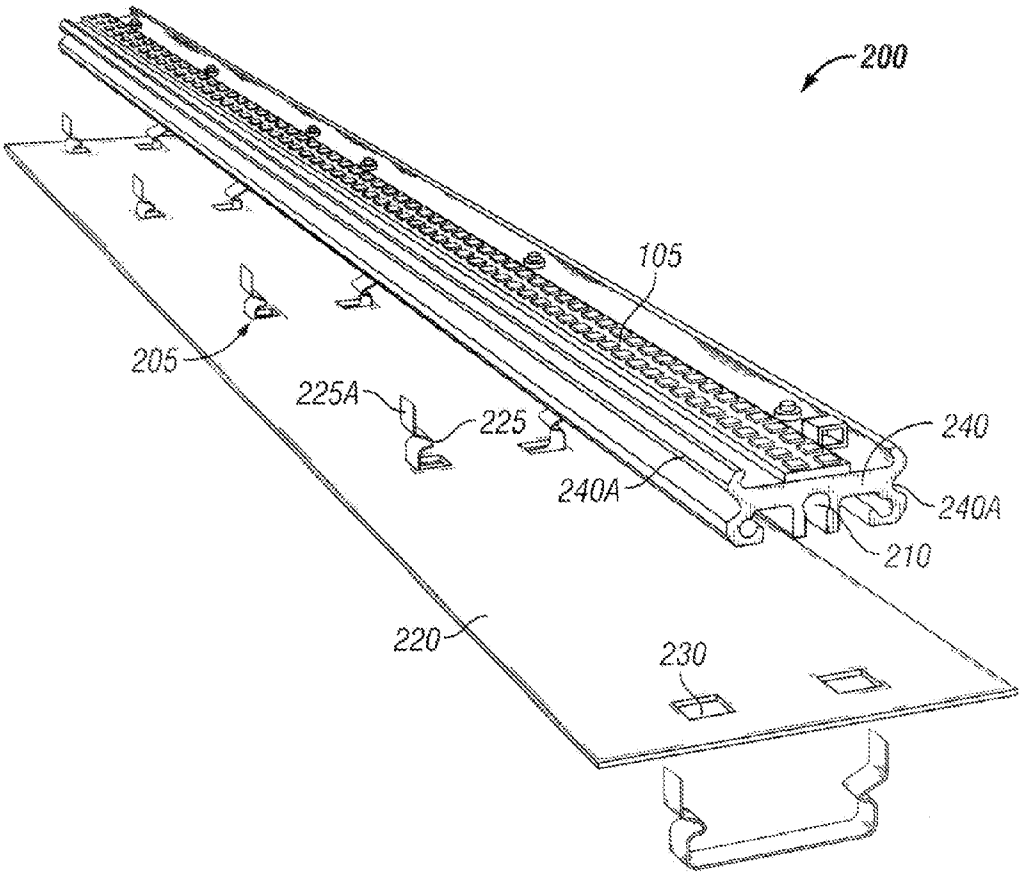

FIG. 2

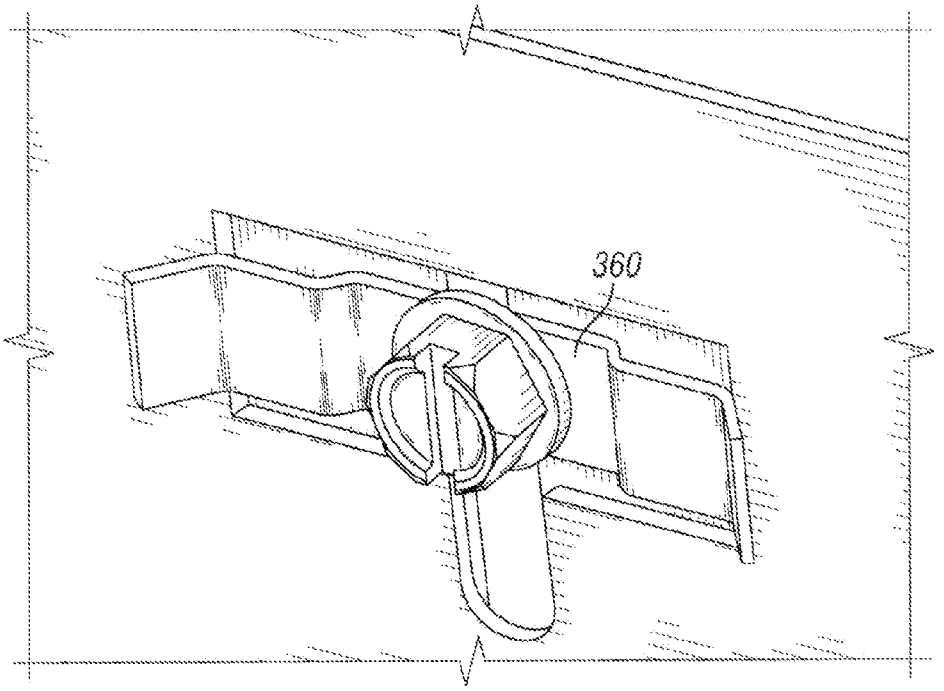

FIG. 3

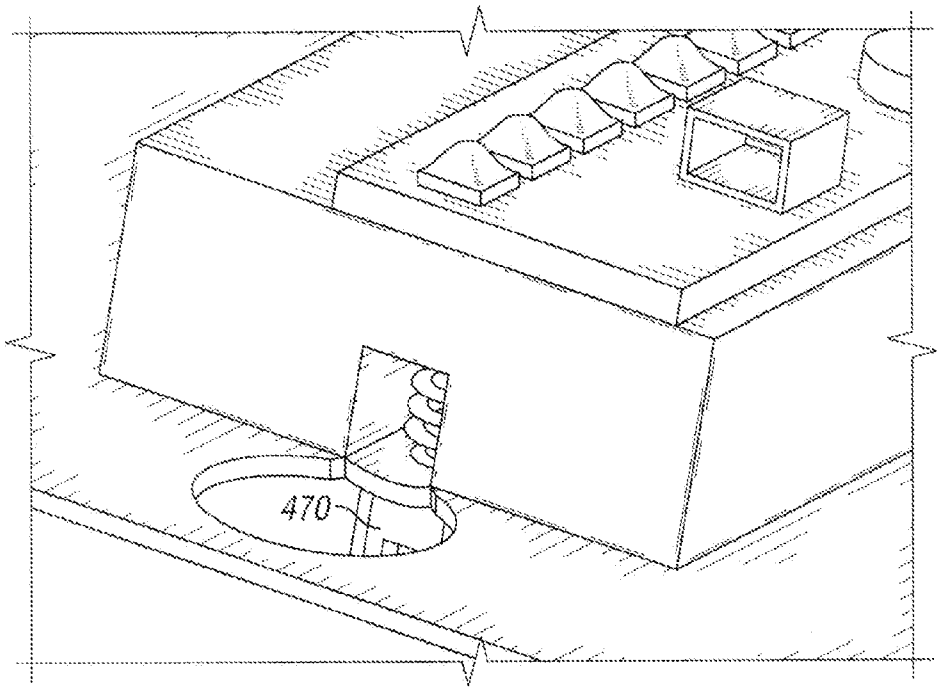

FIG. 4

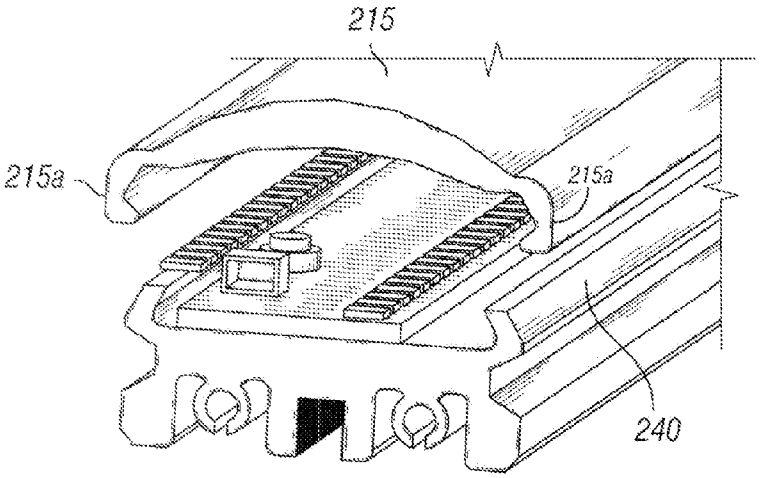

FIG. 5

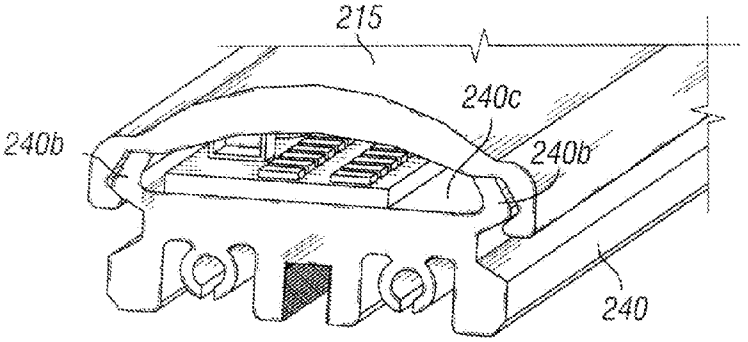

FIG. 6A

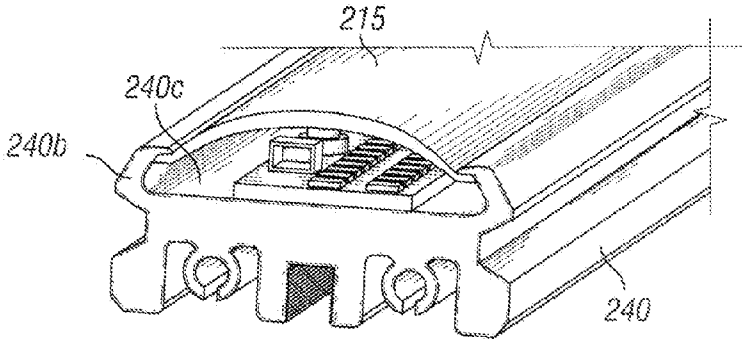

FIG. 6B

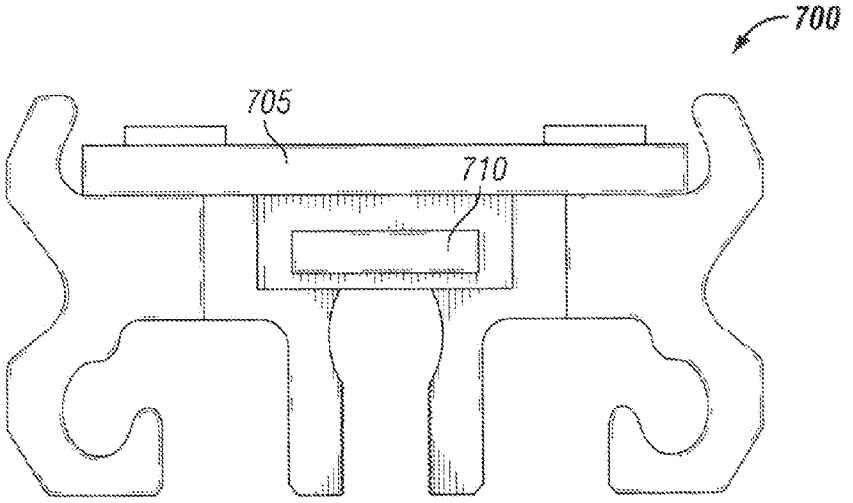

FIG. 7

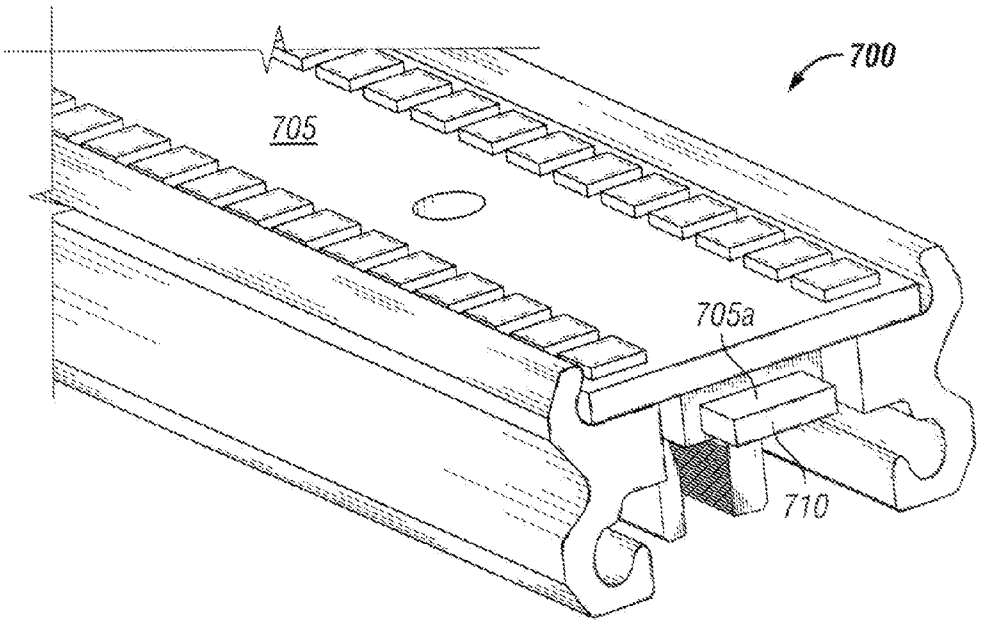

FIG. 8

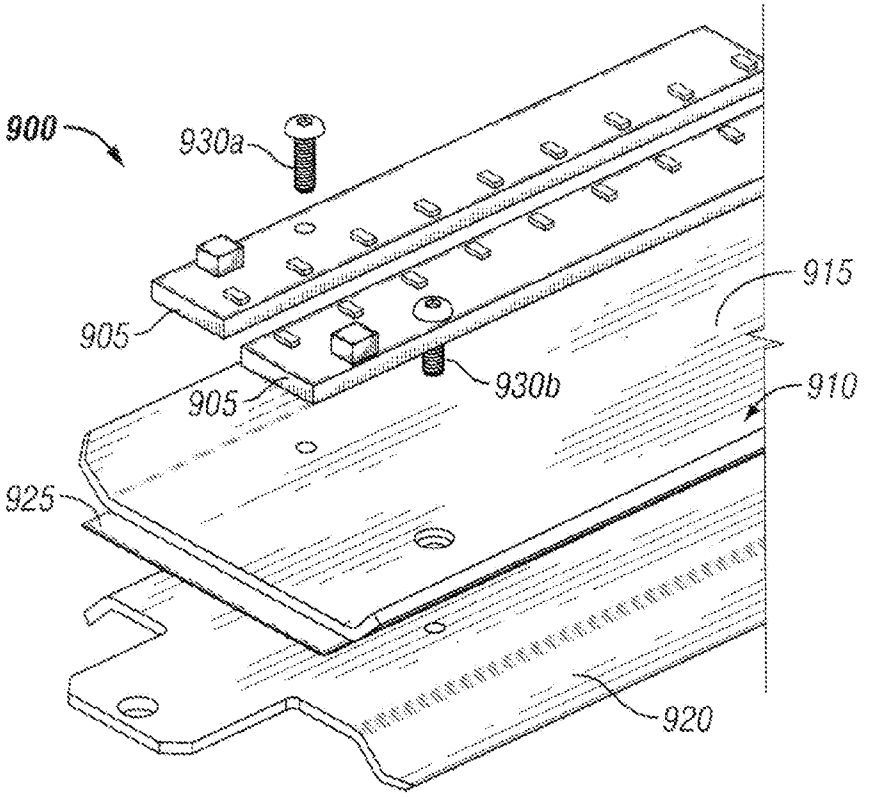

FIG. 9

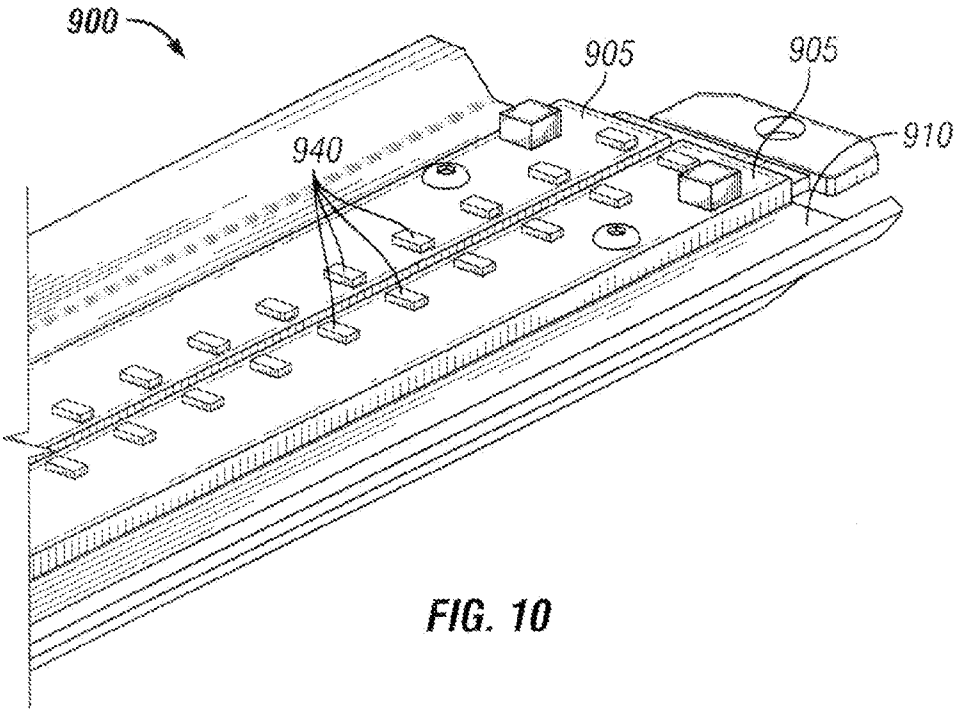

FIG. 10

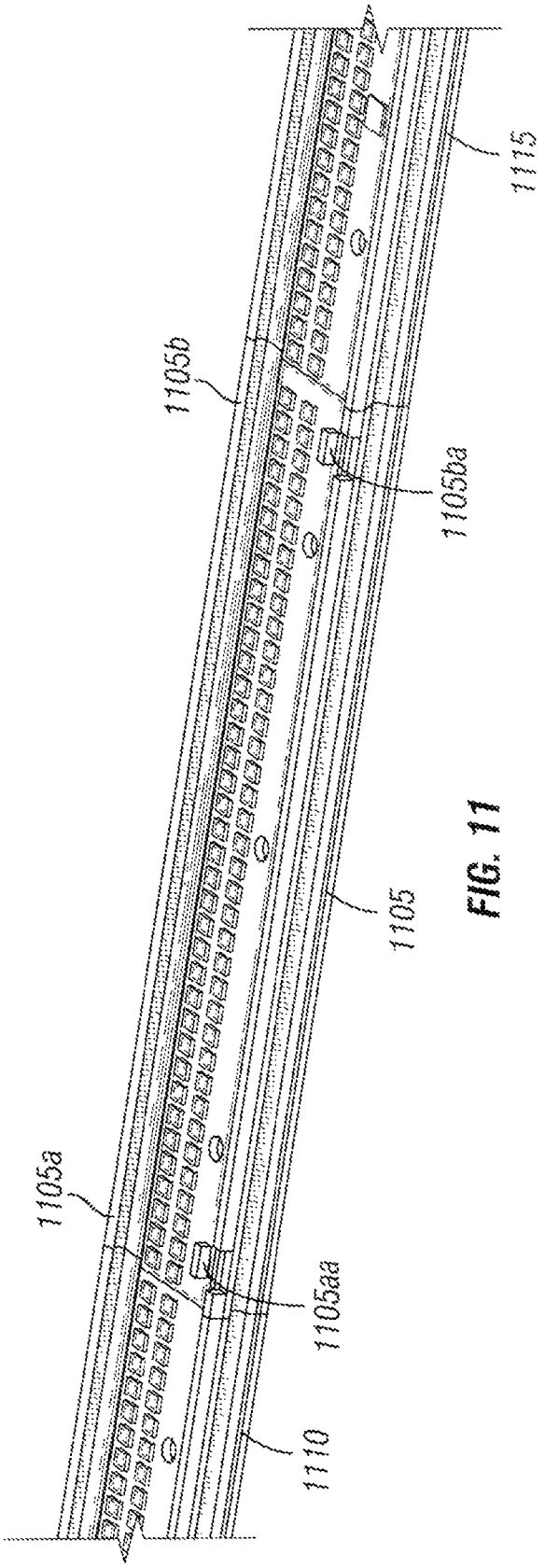

FIG. 11

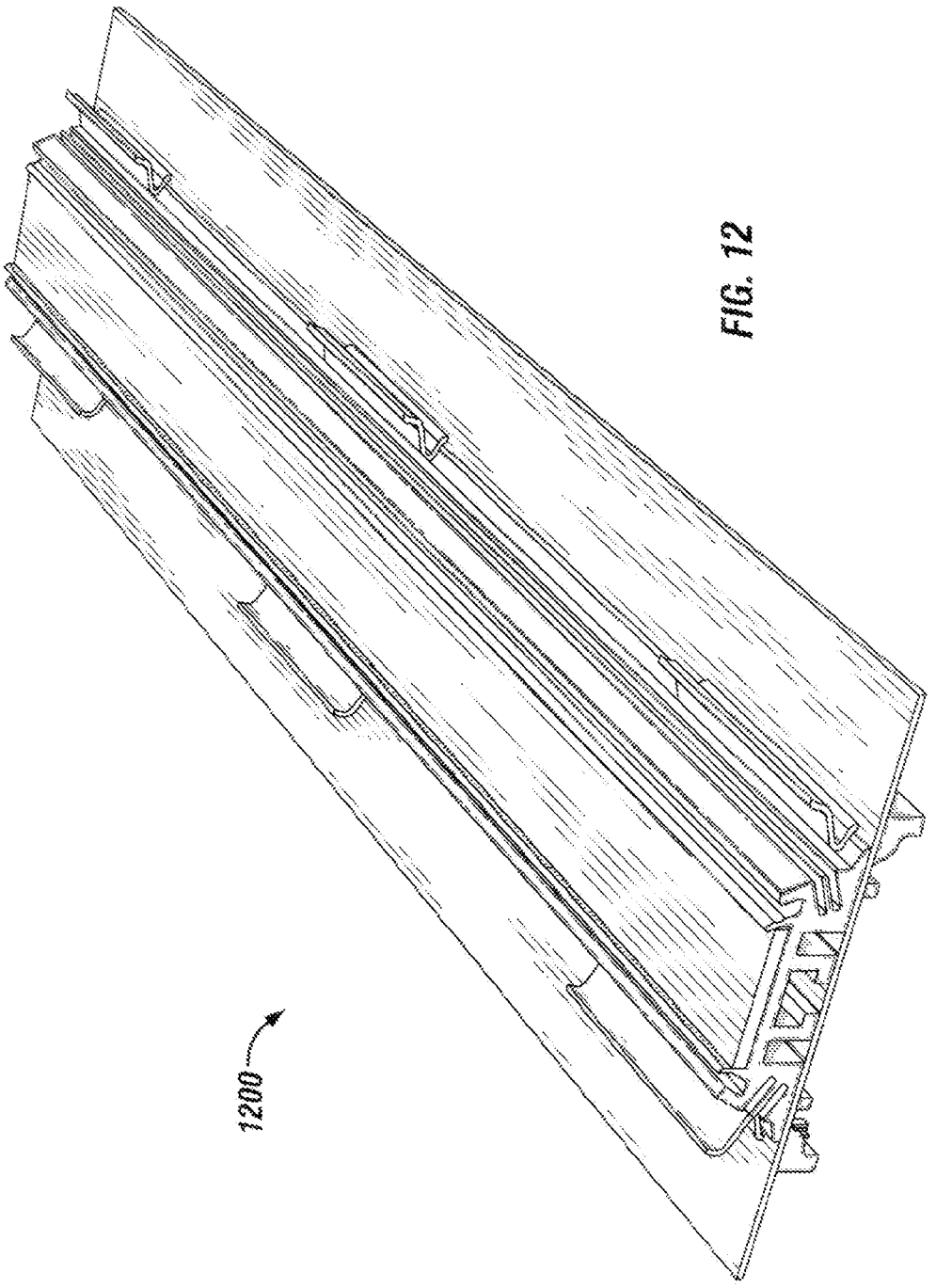

FIG. 12

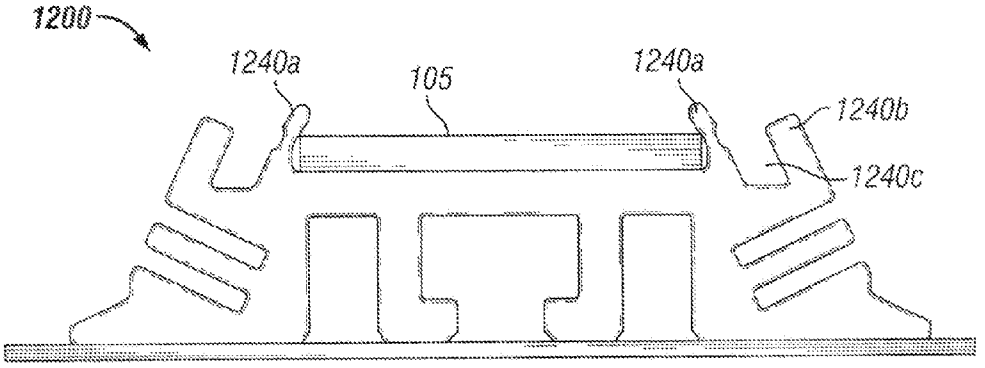

FIG. 13

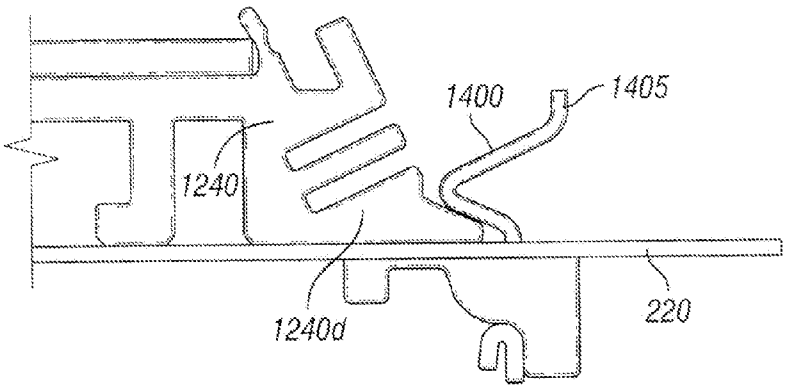

FIG. 14

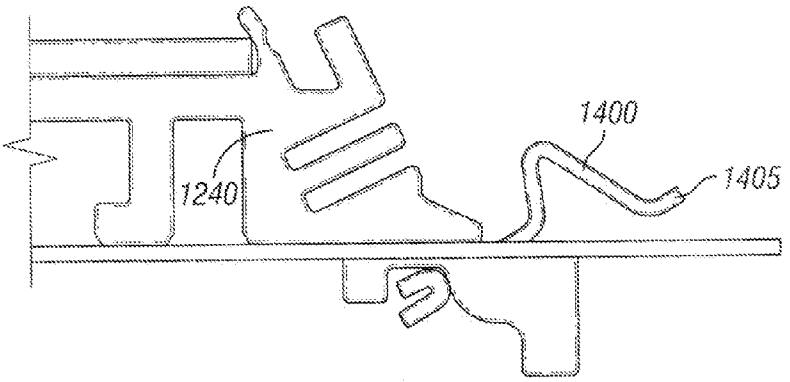

FIG. 15

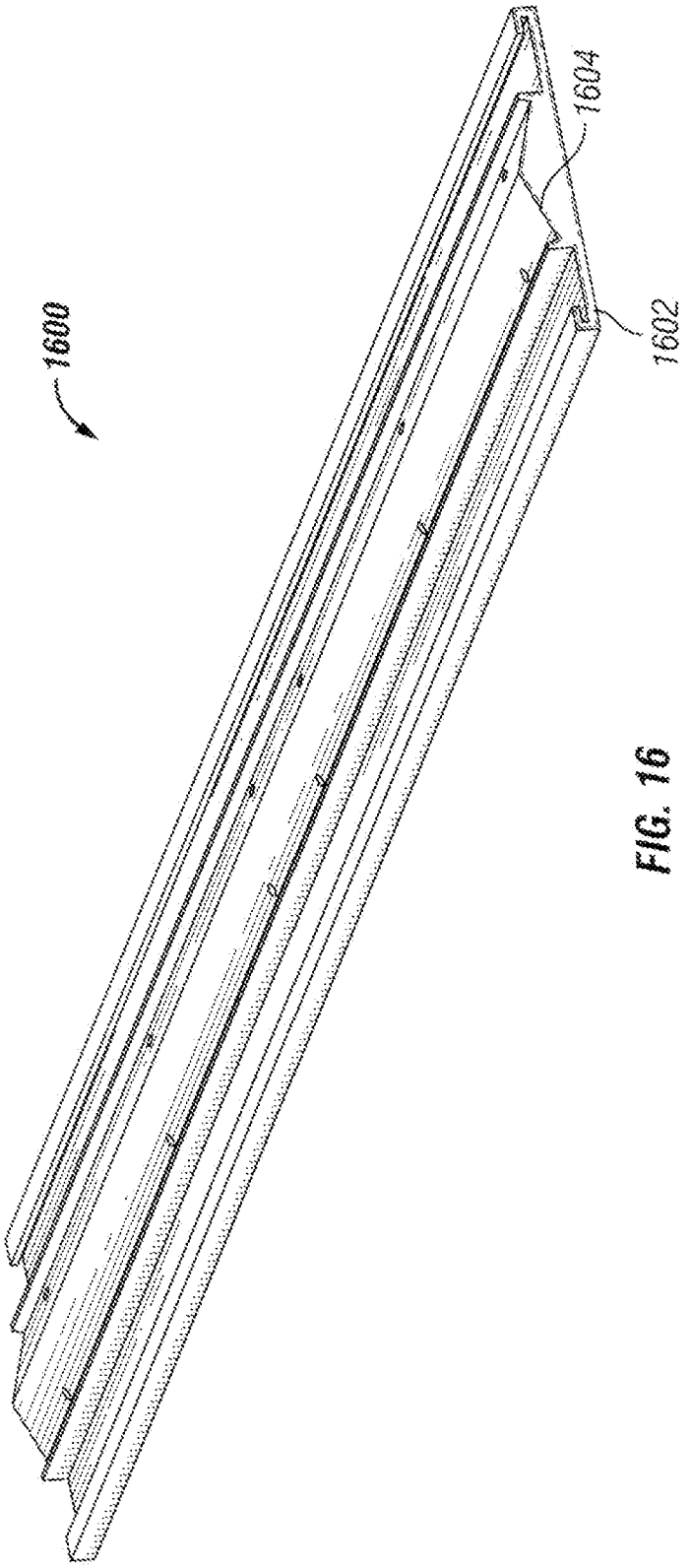

FIG. 16

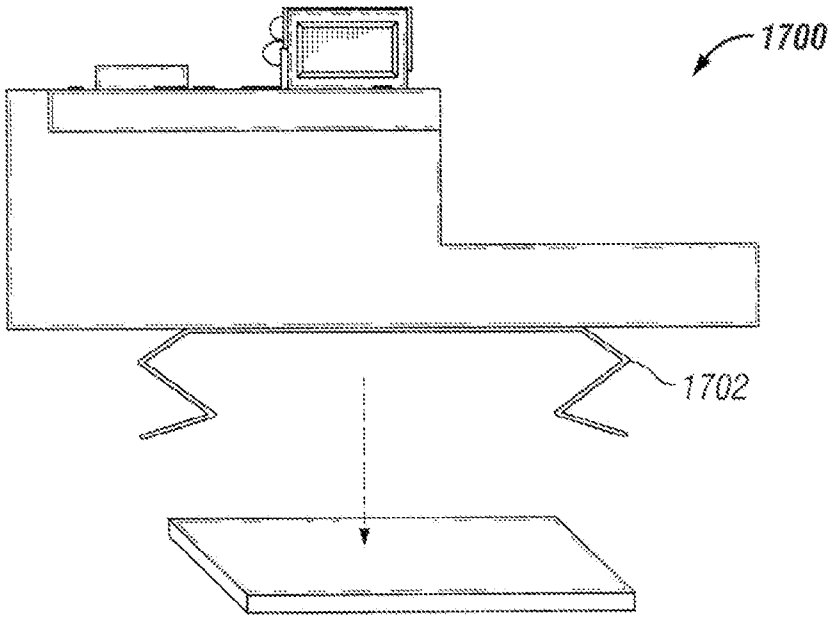

FIG. 17

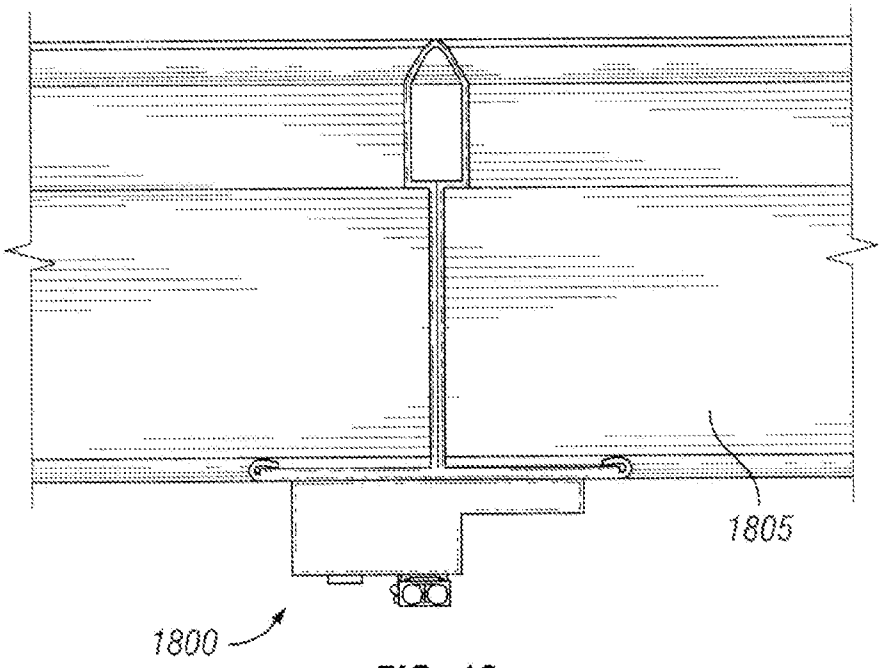

FIG. 18

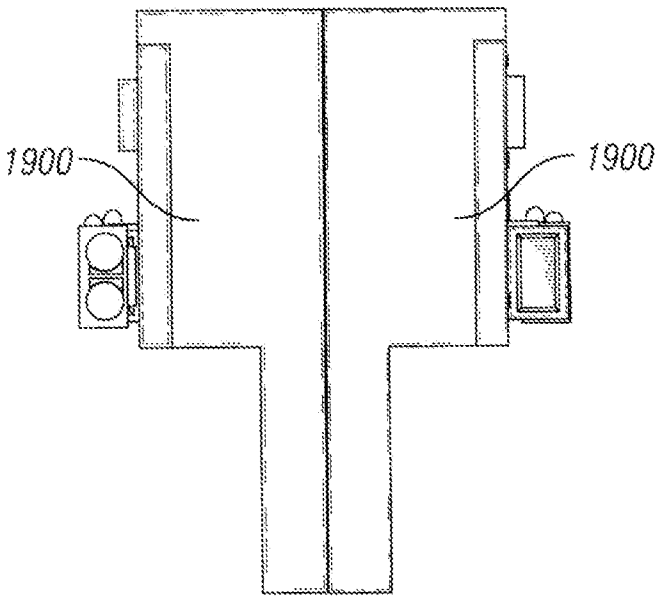

FIG. 19

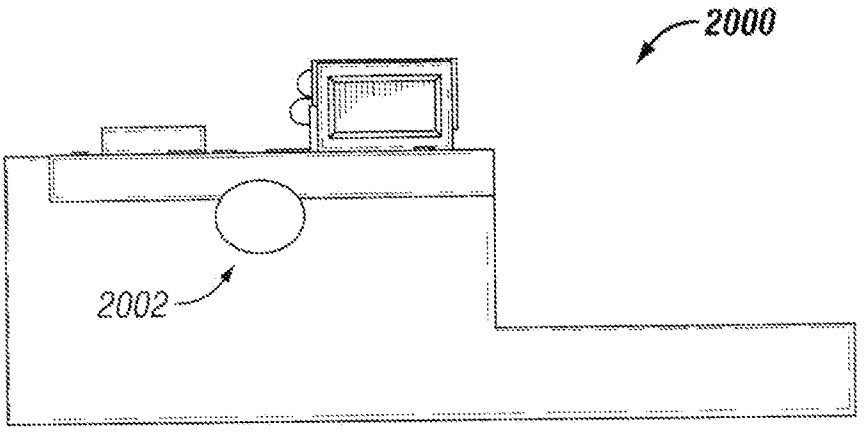

FIG. 20

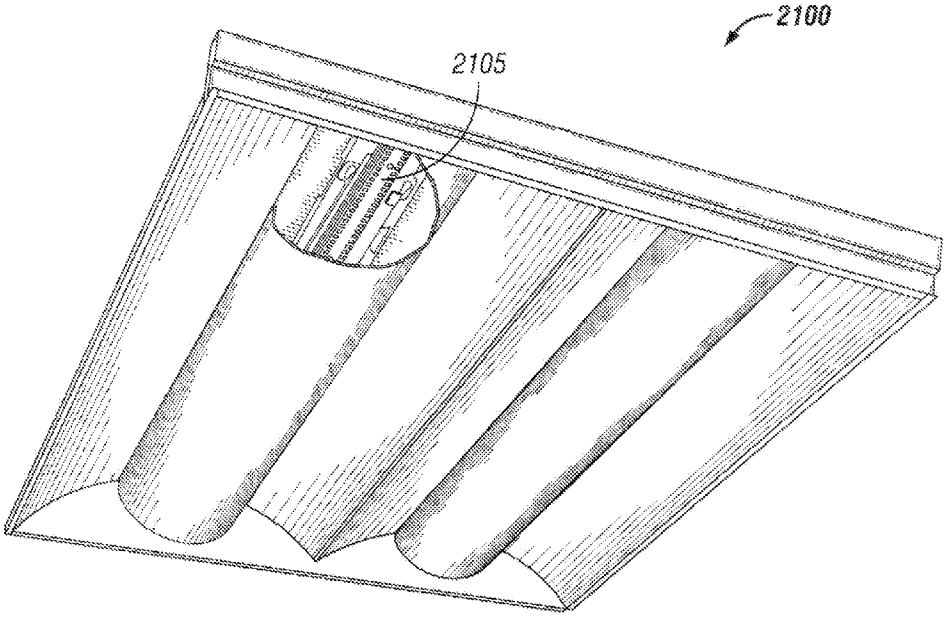

FIG. 21

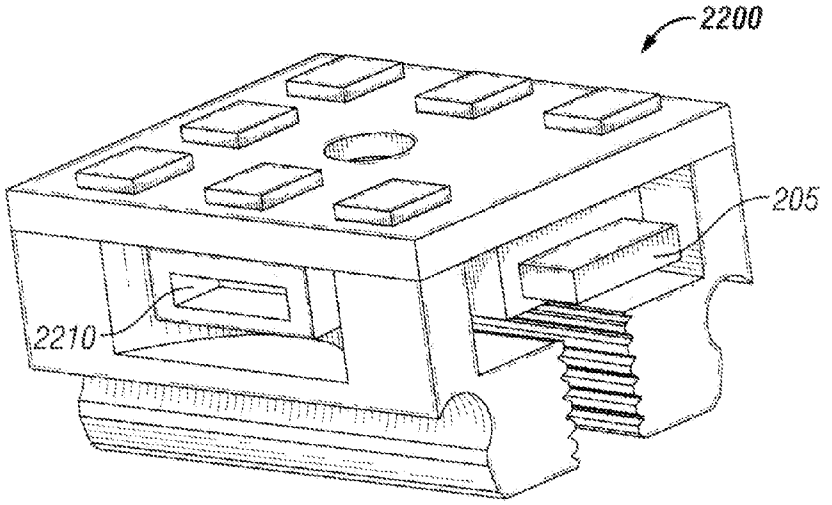

FIG. 22

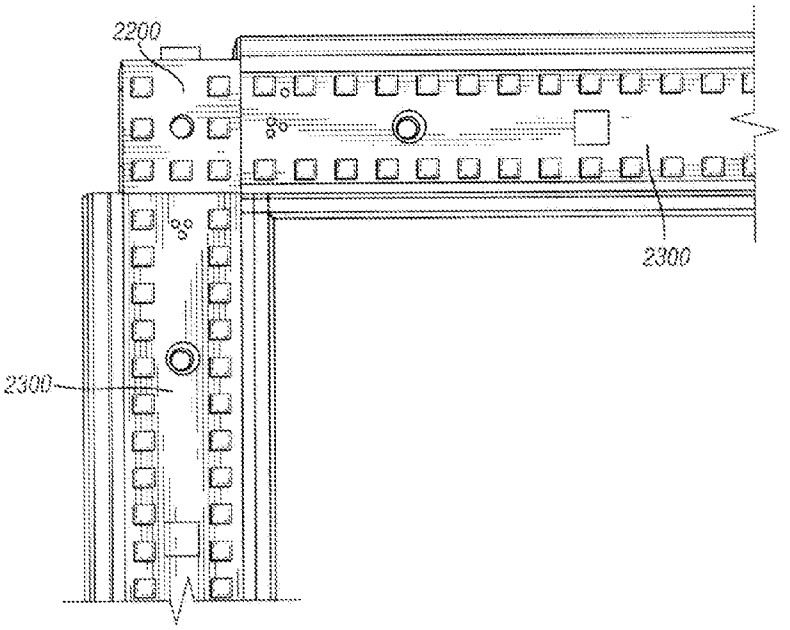

FIG. 23

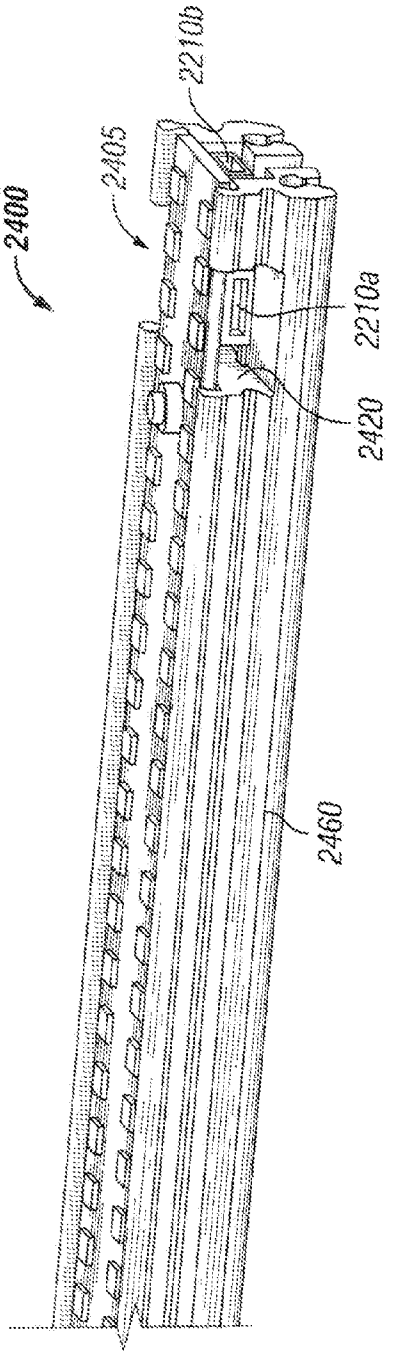

FIG. 24

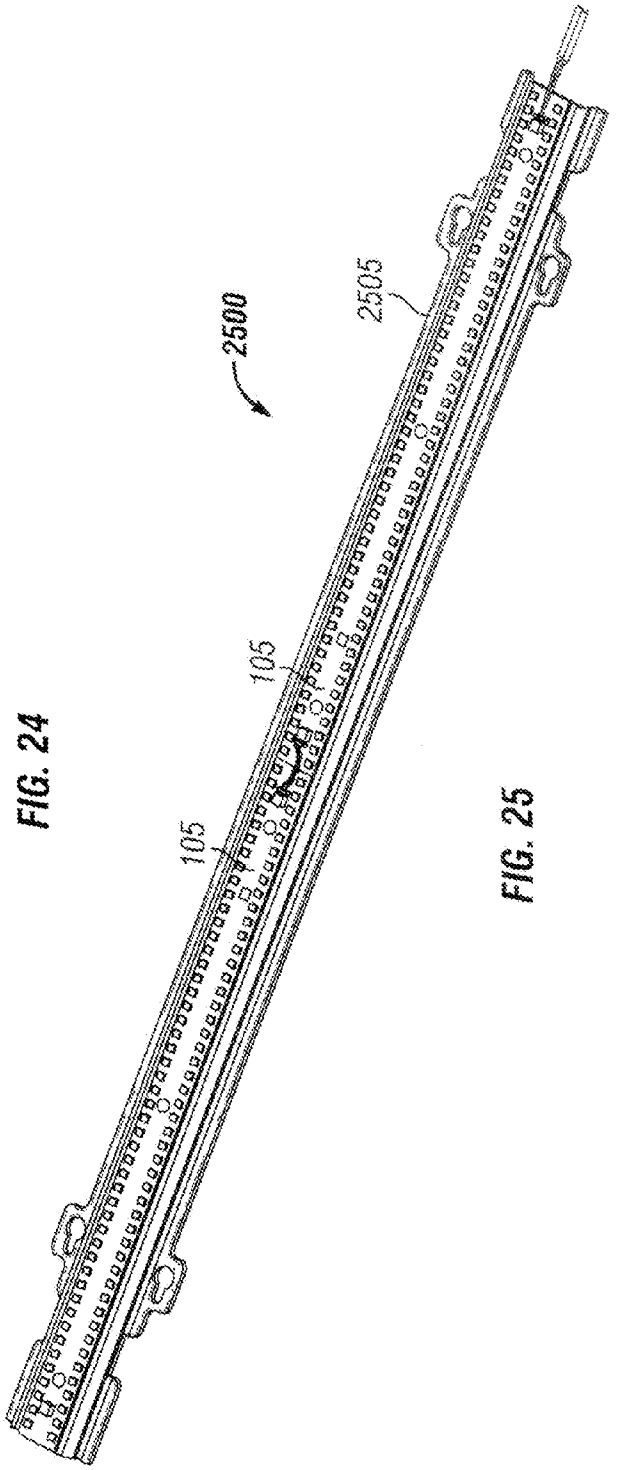

FIG. 25

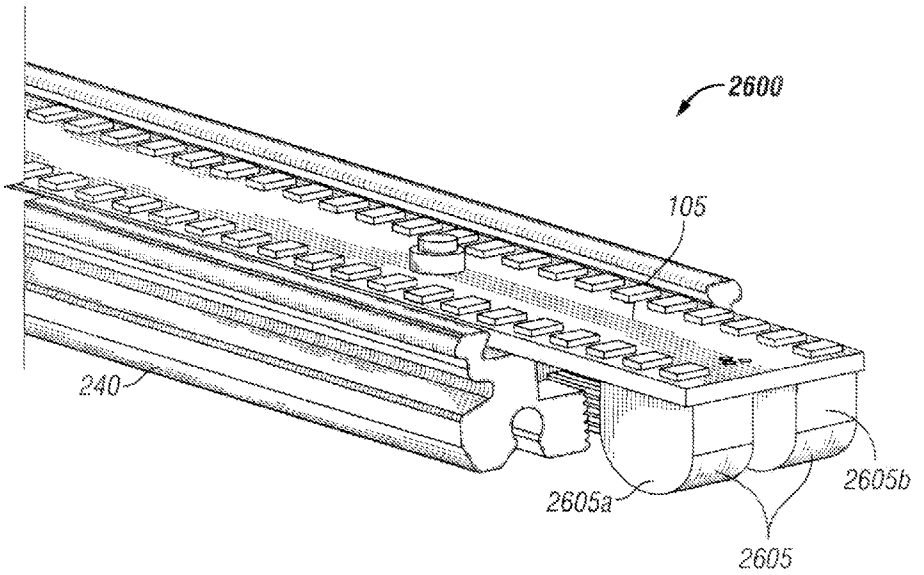
2600
105
240
2605a
2605b
2605

FIG. 26

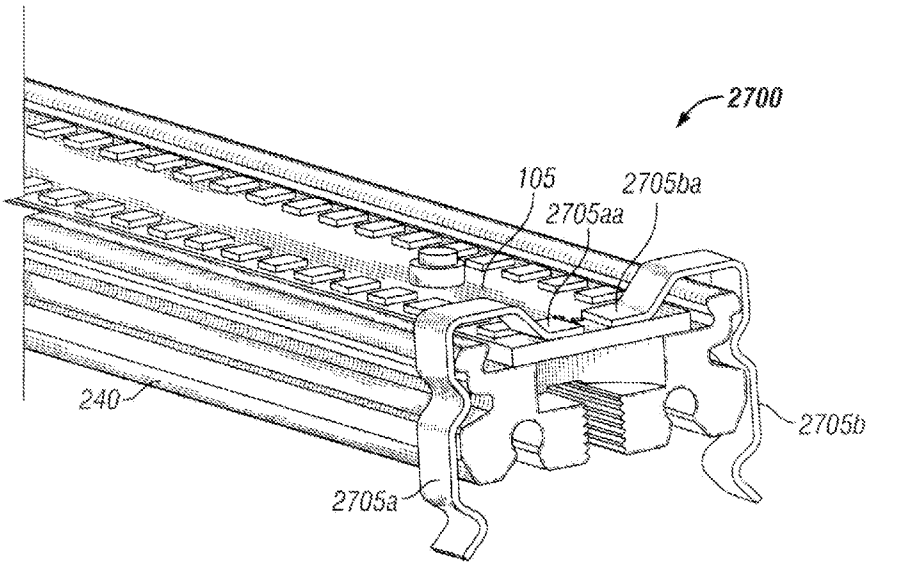
2700
105
2705ba
2705aa
240
2705b
2705a

FIG. 27

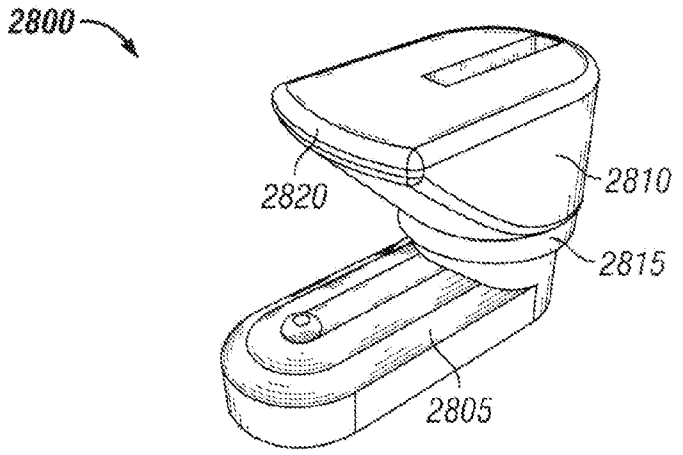

FIG. 28

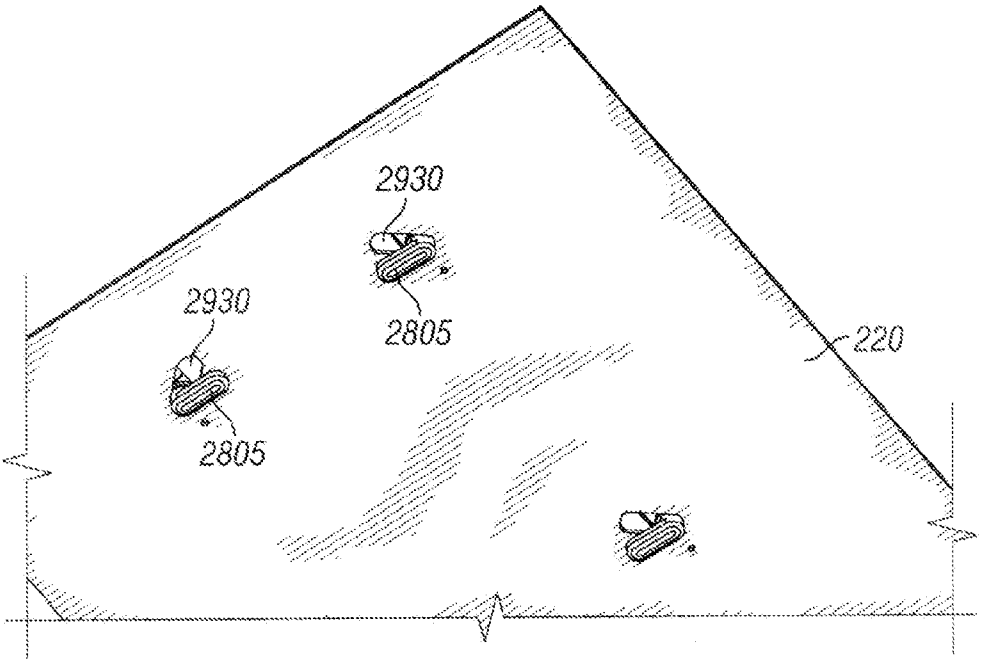

FIG. 29A

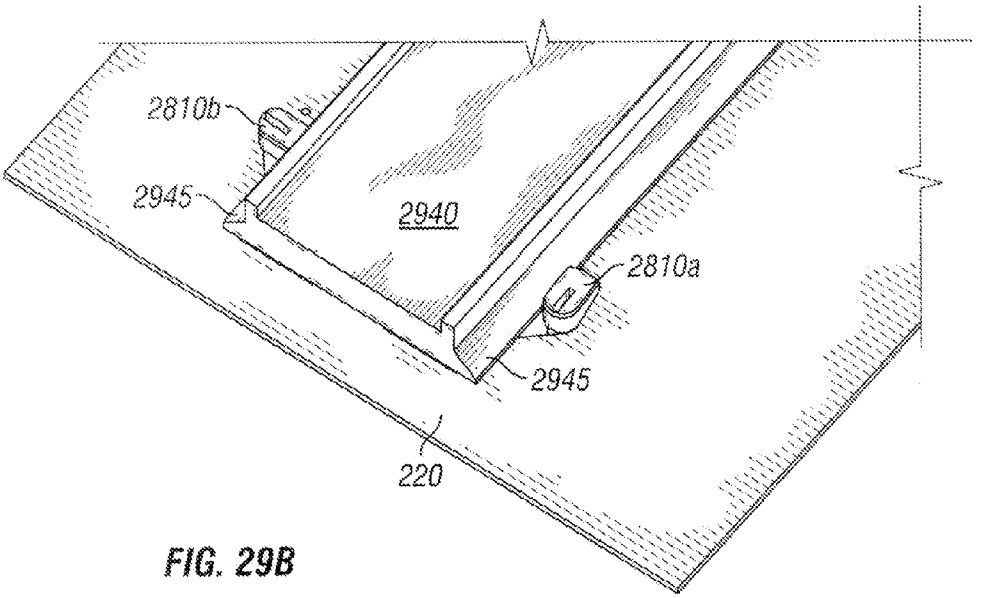

FIG. 29B

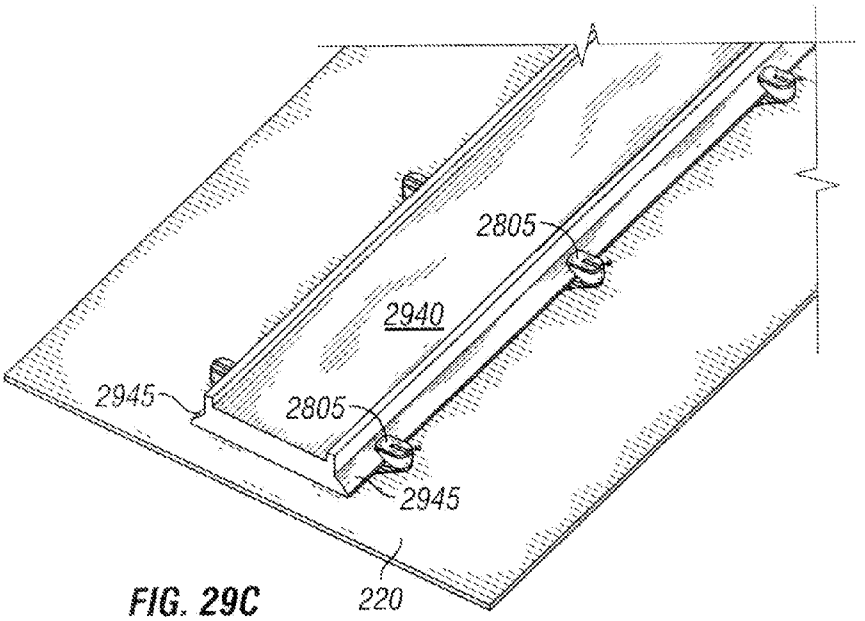

FIG. 29C

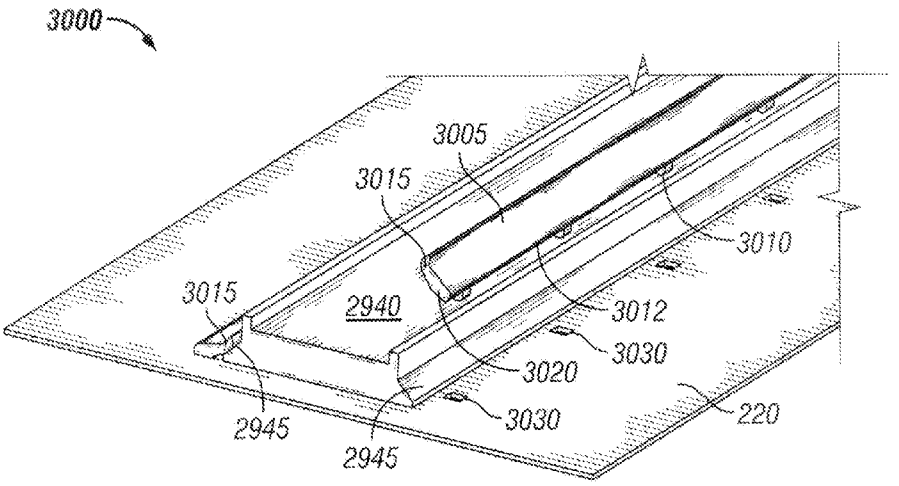
3000
3005
3015
3015
2940
3010
3012
3030
3020
3030
220
2945
2945

FIG. 30

LINEAR LED LIGHT MODULE

RELATED APPLICATIONS

This application claims priority under 35 U.S.C. §119 to U.S. Provisional Patent Application No. 61/328,875, titled "Systems, Methods, and Devices for a Linear LED Light Module," filed on Apr. 28, 2010, and U.S. Provisional Patent Application No. 61/410,204, titled "Linear LED Light Module," filed on Nov. 4, 2010. In addition, this application is a continuation-in-part of and claims priority under 35 U.S.C. §120 to U.S. patent application Ser. No. 12/617,127, titled "Light Emitting Diode Module," filed on Nov. 12, 2009. Each of the foregoing priority applications is hereby fully incorporated herein by reference.

TECHNICAL FIELD

This disclosure relates generally to lighting solutions, and more particularly to systems, methods, and devices for providing linear light emitting diode ("LED") light modules.

BACKGROUND

LED's tend to be less expensive, longer lasting, and more luminous than conventional incandescent, fluorescent, and neon lamps. Therefore, many light fixture providers are opting to incorporate LED light sources into their fixture designs. However, using LED's as light sources for general illumination applications presents certain unique design challenges. For example, incorporating LED's in linear light fixtures presents challenges related to powering (or driving) the LED's, connecting the LED's, controlling the optical output of the light from the LED's, and managing the heat generated by the LED's. A need exists in the art for designs that address one or more of these design challenges for linear LED light source applications

SUMMARY

A linear light emitting diode ("LED") light fixture includes LED modules that interface with one another to provide a substantially continuous array of LED's. This continuous array allows for substantially uniform light output from the LED light fixture. The LED modules can interface with one another via one or more connectors, which allow two or more LED modules to be electrically and mechanically coupled together. The connectors may be disposed beneath the LED's so that the connectors are not visible when the LED modules are coupled together. The connectors may be disposed along opposite ends of the modules to allow for end-to-end configurations of the modules and/or along side ends of the modules to allow for angled or curved configurations of the modules. The LED modules can be powered via one or more wires, magnets, or clips, which are coupled to a power source.

These and other aspects, objects, features, and advantages of the exemplary embodiments will become apparent to those having ordinary skill in the art upon consideration of the following detailed description of illustrated exemplary embodiments, which include the best mode of carrying out the invention as presently perceived.

BRIEF DESCRIPTION OF THE DRAWINGS

Reference will now be made to the accompanying drawings, which are not necessarily drawn to scale, and wherein:

FIG. **1** is a perspective view of an LED assembly, which includes LED modules, in accordance with certain exemplary embodiments.

FIG. **2** illustrates an LED assembly, in accordance with certain alternative exemplary embodiments.

FIG. **3** illustrates mounting of a member via surface clips, in accordance with certain exemplary embodiments.

FIG. **4** illustrates mounting of a member via key hole screws, in accordance with certain exemplary embodiments

FIG. **5** illustrates a cover being coupled to a member via a snap-fit engagement, in accordance with certain exemplary embodiments.

FIGS. **6**A and **6**B illustrate various covers coupled to the member of FIG. **5**, in accordance with certain exemplary embodiments.

FIG. **7** is an elevational side view of an end of an LED assembly, in accordance with certain alternative exemplary embodiments.

FIG. **8** is a perspective side view of the LED assembly of FIG. **7**, in accordance with certain alternative exemplary embodiments.

FIG. **9** is an exploded view of an LED assembly, in accordance with certain alternative exemplary embodiments.

FIG. **10** is a perspective side view of the LED assembly of FIG. **9**, in accordance with certain alternative exemplary embodiments.

FIG. **11** is a side perspective view of an LED assembly, in accordance with certain additional alternative exemplary embodiments.

FIG. **12** is a perspective side view of an LED assembly, in accordance with certain additional alternative exemplary embodiments.

FIG. **13** is an elevational side view of an end of the LED assembly of FIG. **12**, in accordance with certain additional alternative exemplary embodiments.

FIG. **14** illustrates a latch for securing a member to a mounting plate, in a locked position, in accordance with certain additional alternative exemplary embodiments.

FIG. **15** illustrates a latch for securing a member to a mounting plate, in a disengaged position, in accordance with certain additional alternative exemplary embodiments.

FIG. **16** illustrates an example base structure for an LED assembly, in accordance with certain alternative exemplary embodiments.

FIG. **17** is a side view of an LED assembly, in accordance with certain additional alternative exemplary embodiments.

FIG. **18** is a side view of an LED assembly installed on a structure, in accordance with certain exemplary embodiments.

FIG. **19** illustrates two LED assemblies assembled in a back-to-back configuration, in accordance with certain exemplary embodiments.

FIG. **20** is a cross-sectional view of an LED assembly, which includes a heat pipe, in accordance with certain exemplary embodiments.

FIG. **21** illustrates a light fixture, which includes LED assemblies, in accordance with certain exemplary embodiments.

FIG. **22** illustrates an LED assembly connector, in accordance with certain exemplary embodiments.

FIG. **23** illustrates LED assemblies coupled together via a connector, in accordance with certain exemplary embodiments.

FIG. **24** illustrates an LED assembly, which includes an integral connector feature, in accordance with certain additional alternative exemplary embodiments.

FIG. **25** illustrates an LED assembly, in accordance with certain additional alternative exemplary embodiments.

FIG. **26** illustrates an LED assembly, in accordance with certain additional alternative exemplary embodiments.

FIG. **27** illustrates an LED assembly, in accordance with certain additional alternative exemplary embodiments.

FIG. **28** illustrates a latching mechanism for securing a member to a mounting place, in accordance with certain additional alternative exemplary embodiments.

FIGS. **29**A-C illustrate a latching system for securing a member to a mounting plate using the latching mechanism of FIG. **28**, in accordance with certain additional alternative exemplary embodiments.

FIG. **30** illustrates another latching system for securing a member to a mounting plate, in accordance with certain additional alternative exemplary embodiments.

DETAILED DESCRIPTION OF EXEMPLARY EMBODIMENTS

In certain exemplary embodiments, a linear LED light fixture includes LED modules that interface with one another to provide a substantially continuous array of LED's. This continuous array allows for substantially uniform light output from the LED light fixture. In particular, this continuous array prevents undesirable shadows or breaks in the light, even at junctions between the LED modules.

The systems, methods, and apparatuses described herein may be used in retrofit applications or new light fixture designs. For example, the LED modules may replace existing linear light sources, such as fluorescent lamps, in retrofit applications. The LED modules may be used in any residential or commercial lighting application, such as cabinet, shelf, cove, and signage lighting applications, for example.

FIG. **1** is a perspective view of an LED assembly **100**, which includes LED modules **105***a* and **105***b*, in accordance with certain exemplary embodiments. Each LED module **105** is configured to create artificial light or illumination via multiple LED's **110**. Each LED **110** may be a single LED die or may be an LED package having one or more LED dies on the package. In certain exemplary embodiments, the number of dies on each LED package ranges from 1-312. For example, each LED package may include 2 dies.

Each LED module **110** includes at least one substrate **115** to which the LED's **110** are coupled. Each substrate **115** includes one or more sheets of ceramic, metal, laminate, circuit board, flame retardant (FR) board, mylar, or another material. Although depicted in FIG. **1** as having a substantially rectangular shape, a person of ordinary skill in the art having the benefit of the present disclosure will recognize that the substrate **115** can have any linear or non-linear shape. Each LED **110** is attached to its respective substrate **115** by a solder joint, a plug, an epoxy or bonding line, or other suitable provision for mounting an electrical/optical device on a surface. Each LED **110** includes semi-conductive material that is treated to create a positive-negative (p-n) junction. When the LED's **110** are electrically coupled to a power source (not shown), such as a driver, current flows from the positive side to the negative side of each junction, causing charge carriers to release energy in the form of incoherent light.

The wavelength or color of the emitted light depends on the materials used to make each LED **110**. For example, a blue or ultraviolet LED typically includes gallium nitride (GaN) or indium gallium nitride (InGaN), a red LED typically includes aluminum gallium arsenide (AlGaAs), and a green LED typically includes aluminum gallium phosphide (AlGaP). Each of the LED's **110** is capable of being configured to produce the same or a distinct color of light. In certain exemplary embodiments, the LED's **110** include one or more white LED's and one or more non-white LED's, such as red, yellow, amber, green, or blue LED's, for adjusting the color temperature output of the light emitted from the LED modules **105**. A yellow or multi-chromatic phosphor may coat or otherwise be used in a blue or ultraviolet LED **110** to create blue and red-shifted light that essentially matches blackbody radiation. The emitted light approximates or emulates "white," light to a human observer. In certain exemplary embodiments, the emitted light includes substantially white light that seems slightly blue, green, red, yellow, orange, or some other color or tint. In certain exemplary embodiments, the light emitted from the LED's **110** has a color temperature between 2500 and 6000 degrees Kelvin.

In certain exemplary embodiments, an optically transmissive or clear material (not shown) encapsulates at least some of the LED's **110**, either individually or collectively. This encapsulating material provides environmental protection while transmitting light from the LED's **110**. For example, the encapsulating material can include a conformal coating, a silicone gel, a cured/curable polymer, an adhesive, or some other material known to a person of ordinary skill in the art having the benefit of the present disclosure. In certain exemplary embodiments, phosphors are coated onto or dispersed in the encapsulating material for creating white light.

Each LED module **105** includes one or more rows of LED's **110**. The term "row" is used herein to refer to an arrangement or a configuration whereby one or more LED's **110** are disposed approximately in or along a line. LED's **110** in a row are not necessarily in perfect alignment with one another. For example, one or more LED's **110** in a row might be slightly out of perfect alignment due to manufacturing tolerances or assembly deviations. In addition, LED's **110** in a row might be purposely staggered in a non-linear or non-continuous arrangement. Each row extends along a longitudinal axis of the LED module **105**.

Although depicted in FIG. **1** as having one row of LED's **110**, a person of ordinary skill in the art having the benefit of the present disclosure will recognize that the LED's **110** can be arranged in any number of different rows, shapes, and configurations without departing from the spirit and scope of the invention. For example, the LED's **110** can be arranged in four different rows, with each row comprising LED's **110** of a different color. In certain exemplary embodiments, each row and/or each LED **110** is separately controlled by the driver so that each row can independently be turned on and off or otherwise reconfigured.

In the exemplary embodiment depicted in FIG. **1**, each LED module **105** includes 24 LED's **110**. The number of LED's **110** on each LED module **105** may vary depending on the size of the LED module **105**, the size of the LED's **110**, the amount of illumination required from the LED module **105**, and/or other factors. For example, a larger LED module **105** with small LED's **110** may include more LED's **110** than a smaller LED module **105** with large LED's **110**.

Adjacent pairs of LED's **110** are spaced apart from one another by an equal or substantially equal distance, even at the joint **120** between the modules **105**. This equal or substantially equal spacing across the LED modules **200** provides a continuous array of LED's **110** across the LED modules **105**. Because the array is continuous, light output from the LED modules **105** is continuous, without any undesirable breaks or shadows.

In certain exemplary embodiments adjacent LED modules **105** are electrically coupled to one another via a connector **125**. Each connector **125** can include one or more electrical

wires, plugs, sockets, and/or other components that enable electrical transmission between electrical devices. In these exemplary embodiments, each connector **125** includes a first end that is coupled to a protrusion in a top side end of one LED module **105** and a second end that is coupled to a protrusion in a top side end of an adjacent LED module **105**.

Because the connectors **125** extend from top side ends of the LED modules **105**, and not from interfacing side ends of the LED modules **105**, the LED modules **105** can engage one another without any significant gaps between the LED modules **105** or the pattern of LED's **110** on the LED modules **105**. Thus, the LED modules **105** can provide a substantially continuous array or pattern of LED's **110** across the LED modules **105**. As set forth below, in alternative exemplary embodiments, each connector **125** may be coupled to its corresponding LED modules **105** at other locations.

Each LED module **105** is configured to be mounted to a surface (not shown) to illuminate an environment associated with the surface. For example, each LED module **105** may be mounted to, or within, a wall, counter, cabinet, sign, light fixture, or other surface. Each LED module **105** may be mounted to its respective surface using solder, braze, welds, glue, epoxy, rivets, clamps, screws, nails, or other fastening means known to a person of ordinary skill in the art having the benefit of the present disclosure. In certain exemplary embodiments, one or more of the LED modules **105** are removably mounted to their corresponding surfaces to enable efficient repair, replacement, and/or reconfiguration of the LED module(s) **105**. For example, each LED module **105** may be removably mounted to its corresponding surface via one or more screws extending through openings **130** defined in protrusions in the top side end of the LED module **105**. In certain exemplary embodiments, the openings **130** are countersunk to allow the module surface to be flush and/or smooth. In alternative embodiments, the LED module **105** may utilize other mounting means than the mounting holes **130** or may locate the mounting means elsewhere on the LED module **105** (e.g., an upper portion of the LED module **105**, adjacent the LED's **110**).

To remove one of the LED modules **105**, a person can simply disconnect the connector(s) **125** associated with the LED module **105** and unscrew the screws associated with the LED module **105**. In certain exemplary embodiments, once the LED module **105** is removed, the remaining LED modules **105** may be electrically coupled to one another using one or more of the disconnected connectors **125**.

The level of light a typical LED **110** outputs depends, in part, upon the amount of electrical current supplied to the LED **110** and upon the operating temperature of the LED **110**. Thus, the intensity of light emitted by an LED **110** changes when electrical current is constant and the LED's **110** temperature varies or when electrical current varies and temperature remains constant, with all other things being equal. Operating temperature also impacts the usable lifetime of most LED's **110**.

As a byproduct of converting electricity into light, LED's **110** generate a substantial amount of heat that raises the operating temperature of the LED's **110** if allowed to accumulate on the LED's **110**, resulting in efficiency degradation and premature failure. Each LED module **105** is configured to manage heat output by its LED's **110**. Specifically, each LED module **105** includes a conductive member **140** that is coupled to the substrate **115** and assists in dissipating heat generated by the LED's **110**. Specifically, the member **140** acts as a heat sink for the LED's **110**. The member **140** receives heat conducted from the LED's **110** through the substrate **115** and transfers the conducted heat to the surrounding environment (typically air) via convection.

FIG. **2** illustrates an LED assembly **200**, in accordance with certain alternative exemplary embodiments. The LED assembly **200** is similar to the LED assembly **100** described above, except that the LED assembly **200** includes snap-in features **205**, a center rod mount **210**, and a cover **215**. The snap-in features **205** include spring clips **225** with opposing ends **225*a*** that extend through openings **230** in a mounting plate **220**. The ends **225*a*** of the spring clips **225** engage longitudinal sides **240*a*** of a member **240** to which the LED modules **105** are mounted, thereby securing the member **240** (and LED modules **105**) to the mounting plate **220**.

The spring clips **225** may be manipulated to mount or remove the member **240**. For example, pushing the ends **225*a*** of the spring clips **225** apart from one another can separate the spring clips **225** from the member **240**, releasing the member **240** from the spring clips **225** mounting plate **220**. Similarly, the member **240** may be mounted to the mounting plate **220** by separating the ends **225*a*** of the spring clips **225**, sliding the member **240** between the ends **225*a***, and releasing the ends **225*a*** so that they engage the sides **240*a*** of the member **240**. Thus, the member **240** (and LED modules **105**) is removably mounted and interchangeable in certain exemplary embodiments.

A person of ordinary skill in the art having the benefit of the present disclosure will recognize that features other than the snap-in features **205** may be used to mount the member **240**, whether removably or in a fixed position, in certain alternative exemplary embodiments. For example, the member **240** may be mounted via one or more surface clips **360**, as illustrated in FIG. **3**, one or more keyhole screws **470**, as illustrated in FIG. **4**, or any other fastener.

Returning to FIG. **2**, the mounting plate **220** may be mounted in any light fixture, whether in a retrofit or new fixture application. In certain exemplary embodiments, the mounting plate **220** may be soldered, brazed, welded, glued, epoxied, riveted, clamped, screwed, nailed, or otherwise fastened within an existing or new light fixture. For example, the mounting plate **220** may be mounted within an existing fluorescent light fixture, replacing fluorescent lamps with the LED modules **105**. The mounting plate **220** can have a size and shape corresponding to the interior cavity of the light fixture.

The center rod mount **210** includes a channel extending at least partially along a longitudinal axis of the member **240**. The channel is configured to receive at least one rod or other member (not shown), which may be manipulated to rotate or otherwise move the member **240** and LED modules **105**. For example, the rod may be rotated to rotate the member **240** and LED modules **105** at least partially around an axis of the rod, thereby allowing for adjustment of the light output from the LED modules **105**. Such adjustment may be particularly desired in a wall wash lighting application, for example.

The rod may be solid, hollow, or somewhere in-between. In certain exemplary embodiments, the rod includes a substantially hollow member, which acts as a heat pipe for diverting heat away from the LED module **200**. Although depicted in FIG. **2**A as extending along a center of the member **240**, a person of ordinary skill in the art having the benefit of the present disclosure will recognize that the rod mount **210** may extend in other, off-center locations in certain alternative exemplary embodiments.

The cover (or "over optic") **215** includes a substantially elongated member that extends along the longitudinal axis of the member **240**. The cover **215** is an optically transmissive element that provides protection from dirt, dust, moisture,

and the like. In certain exemplary embodiments, the cover **215** is configured to control light from the LEDs **110** via refraction, diffusion, or the like. For example, the cover **215** can include a refractor, a lens, an optic, or a milky plastic or glass element.

FIGS. **5** and **6**A illustrate the cover **215** being coupled to the member **240** via a snap-fit engagement, in accordance with certain exemplary embodiments. Side ends **215***a* of the cover **215** are sized and shaped to interface with and partially surround protrusions **240***b* extending from the member **240**, to couple the cover **215** to the member **240**. In certain exemplary embodiments, the member **240** and protrusions **240***b* can be sized and shaped to accommodate covers **215** having multiple different sizes and shapes. For example, the cover **215** in FIG. **6**A may be used in a retrofit application in which the assembly **200** is installed in an existing T8 light fixture, and a smaller cover **215**, as shown in FIG. **6**B, may be used in an application in which the assembly **200** is installed in a T5 light fixture. For example, as shown in FIG. **6**B, such a smaller cover **215** may be configured such that side ends of the cover **215** are disposed within the cavity **240***c* defined by the protrusions **240***b*, with at least a portion of the ends of the cover **215** engaging interior sides of the protrusions **240***b*. For example, the side ends of the cover **215** may be disposed within one or more grooves defined by the protrusions **240***b*.

FIG. **7** is an elevational side view of an end of an LED assembly **700**, in accordance with certain alternative exemplary embodiments. FIG. **8** is a perspective side view of the LED assembly **700**, in accordance with certain alternative exemplary embodiments. The LED assembly **700** is similar to the LED assemblies **100** and **200** described above, except that, instead of the LED modules **105** being connected via connectors **125** extending across top surfaces of the LED modules **105** (as in the LED assemblies **100** and **200**), the LED modules **705** of the LED assembly **700** are connected to one another via connectors **710** disposed beneath the LED's **110**. Each connector **710** includes one or more electrical wires, plugs, sockets, and/or other components that enable electrical transmission between the LED modules **705**. For example, the connectors **710** may include one or more secure digital (SD) cards, universal series bus (USB) connectors, category 5 (Cat-5) or category 6 (Cat-6) connectors, etc.

In certain exemplary embodiments, one longitudinal end **705***a* of each LED module **700** can include a connector **710** and an opposite longitudinal end (not shown) of the LED module **700** can include a corresponding receptacle for the connector **710**. Thus, the LED modules **700** may be connected end-to-end, with each connector **710** being disposed in its corresponding receptacle. Because the connectors **710** and receptacles are disposed beneath the LED's **110**, the connectors **710** and receptacles are generally not visible when the LED assembly **700** is installed in a light fixture. Thus, the connectors **710** do not create any shadows or other undesirable interruptions in the light output from the LED assembly **700**.

FIG. **9** is an exploded view of an LED assembly **900**, in accordance with certain alternative exemplary embodiments. FIG. **10** is a perspective side view of the LED assembly **900**, in accordance with certain alternative exemplary embodiments. The LED assembly **900** is similar to the LED assemblies **100**, **200**, and **700** described above, except that the LED modules **905** of LED assembly **900** are coupled to powered surfaces **910**, such as rails and/or tracks, which power the LED modules **905**. The surfaces **910** include a first strip **915** having a first polarity and a second strip **920** having a second polarity that is different than the first polarity. A strip **925** of insulation, such as insulator film, is disposed between the first strip **915** and the second strip **920**. The strip **925** electrically isolates the first strip **915** and the second strip **920**.

Screws **930***a* and **930***b* make connections to either strip **915**, **920**. In the exemplary embodiment depicted in FIGS. **9** and **10**, screw **930***a* connects to strip **915**, and screw **930***b* connects to strip **920**. Power may be drawn to the LED's **940** from the strips **915** and **920** via the screws **930***a* and **930***b*, without the need for additional wires or other electrical connectors.

FIG. **11** is a side perspective view of an LED assembly **1100**, in accordance with certain additional alternative exemplary embodiments. The LED assembly **1100** includes an LED module **1105**, which powers adjacent LED modules **1110** and **1115**. LED module **1105** includes first and second opposing ends **1105***a* and **1105***b*, respectively, that are electrically isolated from one another and separately powered. For example, end **1105***a* may be powered via entry point **1105***aa*, and end **1105***b* may be powered via entry point **1105***ba*. End **1105***a* provides power for LED module **1110** and may also provide power for one or more additional LED modules (not shown) coupled to LED module **1110** on a side of LED module **1110** opposite the module **1105**. End **1105***b* provides power for LED module **1115** and may also provide power for one or more additional LED modules (not shown) coupled to LED module **1115** on a side of LED module **915** opposite the module **1105**. The LED modules **1105**, **1110**, **1115** may have different (or the same) lengths. For example, LED module **1105** may have a length of two feet, and the LED modules powered by each end **1105***a*, **1105***b* of the LED module **1105** may have total lengths of about eight feet.

FIG. **12** is a perspective side view of an LED assembly **1200**, in accordance with certain additional alternative exemplary embodiments. FIG. **13** is an elevational side view of an end of the LED assembly **1200**, in accordance with certain additional alternative exemplary embodiments. LED assembly **1200** is similar to the LED assemblies **100**, **200**, and **700** above, except that the member **1240** includes multiple protrusions **1240***a* and **1240***b*. The protrusions **1240***b* are substantially similar to the protrusions **240***b* described above in connection with LED assembly **200**. The protrusions **1240***a* are bendable to engage and clamp the LED modules **105** to the member **1240**. In the embodiment depicted in FIGS. **12** and **13**, the protrusion **1240***a* on the left is at a start (i.e., non-bent) position, and the protrusion **1240***b* on the right is in a bent position. To mount the LED modules **105** to the member **1240**, the LED modules **105** may be placed between protrusions **1240***a* in their start positions, and then the protrusions **1240***a* may be bent to secure the LED modules **105** in place relative to the member **1240**. In certain exemplary embodiments, the protrusions **1240***a* and **1240***b* define a cavity **1240***c* in which an end of a cover, such as the cover **215**, may be positioned, substantially as described above in connection with FIGS. **5** and **6**.

FIGS. **14** and **15** illustrate a latch **1400** for securing the member **1240** to a mounting plate **220**, in accordance with certain additional alternative exemplary embodiments. The latch **1400** includes an arm **1405** that is rotatable between an engaged or "locked" position, as illustrated in FIG. **14**, and a disengaged or "unlocked" position, as illustrated in FIG. **15**. In the locked position, the arm **1405** engages a bottom portion **1240***d* of the member **1240**, thereby securing the member **1240** to the mounting plate **220**. The arm **1405** may be rotated away from the bottom portion **1240***d* to release the member **1240** from the mounting plate **220**.

FIG. **16** illustrates an example base structure **1600** for an LED assembly, in accordance with certain alternative exemplary embodiments. For example, the base structure **1600**

may be included in place of member **240** of FIG. **2**, in certain exemplary embodiments. As shown in FIG. **16**, the base structure **1600** may be extruded to have a lower portion **1602** and an upper portion **1604**. In various example embodiments of the invention, the base structure **1600** may be a single piece or multiple parts. In the example embodiment shown in FIG. **16**, the lower portion **1602** is configured to hold and/or connect with an over-optic or lens, such as a cover **215** (FIG. **2**), as well as being configured to connect to a housing or heat sink (not shown).

As shown in FIG. **16**, the upper portion **1604** has a triangular cross-section. The triangular shape aims the LED light sources that will be installed on the base structure **1600** at a desired angle to allow for particular optical control and/or desired light distribution. In other embodiments of the invention, different shapes and/or cross-sections of the base structure for the linear LED light modules may be used to allow for configuring the linear LED light modules in a variety of housing configurations or housing form factors for any desired lighting application or distribution.

FIG. **17** is a side view of an LED assembly **1700**, in accordance with certain additional alternative exemplary embodiments. As shown in FIG. **17**, a bottom side of the LED assembly **1700** includes a fastener **1702**, such as a spring clip. In other embodiments, other fasteners (e.g., clips, snaps, hooks, adhesive, and/or the like) may be used. The fastener **1702** is configured to connect to a standard socket cutout, such as a standard T5 or T8 socket cutout in the case of a retrofit solution for replacing fluorescent light bulbs. In new fixture housing, bulb, light module, or subassembly designs that incorporate one or more of the exemplary embodiments, the fastener **1702** may be designed and used such that it allows for the easy snap-in of the LED assembly **1700** to the fixture housing, bulb, light module, or subassembly. In certain exemplary embodiments, the snap-in capability allows for easier manufacturing, installation, and/or maintenance of the LED assembly **1700** and/or the light fixture incorporating the LED assembly **1700**.

FIG. **18** is a side view of an LED assembly **1800** installed on a structure **1805**, in accordance with certain exemplary embodiments. As shown in FIG. **18**, the LED assembly **1800** may be affixed directly to a structure **1805**, such as a ceiling grid, wall panel, heat sink, fixture housing, and/or the like. In an example embodiment of the invention where the structure **1805** is a ceiling grid or wall panel, the LED assembly **1800** may have a driver mounted in the ceiling or wall such that it is remotely located from the LED assembly **1800**. In some example embodiments, the LED assembly **1800** may have one or more lenses (not shown) covering the LED source(s) or the entire top surface of the LED assembly **1800**. The lens may be diffused or non-diffused depending on the desired application and appearance.

FIG. **19** illustrates two LED assemblies **1900** assembled in a back-to-back configuration, in accordance with certain exemplary embodiments. In this configuration, the LED assemblies **1900** may be used for up and down light distributions or side-to-side light distributions. The configuration may be used as substitutes or replacements for existing linear light bulbs such as linear fluorescent fixtures. In other embodiments, a single module with LEDs (and/or other components) on the top and bottom surfaces of the module may be used rather than two modules in a back-to-back configuration.

FIG. **20** is a cross-sectional view of an LED assembly **2000**, which includes a heat pipe **2002**, in accordance with certain exemplary embodiments. The heat pipe **2002** may be incorporated into the assembly **2000** to reduce and/or transfer heat in, for example, high density applications where either the assembly **2000** includes many LEDs and/or heat transfer is an issue. The incorporation of heat pipes **2002** may also be useful where assemblies **2000** include LEDs (and/or other components) on the top and bottom surfaces of the assembly **2000** or where assemblies **2000** are in back-to-back configurations as discussed above with reference to FIG. **19**.

FIG. **21** illustrates a light fixture **2100**, which includes LED assemblies **2105**, in accordance with certain exemplary embodiments. The light fixture **2100** is a troffer fixture, which is designed for overhead lighting applications. Traditionally, troffers have included fluorescent light sources. The troffer **2100** of FIG. **21** includes LED assemblies **2105**, which extend along a length of the troffer **2100** in place of fluorescent lamps. The LED assemblies **2105** may be included in a new troffer **2100** or in a retrofit of an existing troffer **2100**. The LED assemblies **2105** may be the same as or different than the various LED assembly embodiments described above. A person of ordinary skill in the art will recognize that the troffer **2100** is merely exemplary and that, in certain alternative exemplary embodiments, the LED assemblies **2105** can be included in other types of light fixtures, whether overhead, wall-mounted, pole-mounted, or otherwise.

Accordingly, many modifications and other embodiments of the inventions set forth herein will come to mind to one skilled in the art to which these inventions pertain having the benefit of the teachings presented in the foregoing descriptions and the associated drawings. Therefore, it is to be understood that the inventions are not to be limited to the specific embodiments disclosed and that modifications and other embodiments are intended to be included within the scope of this application. Although specific terms are employed herein, they are used in a generic and descriptive sense only and not for purposes of limitation.

FIG. **22** illustrates an LED assembly connector **2200**, in accordance with certain exemplary embodiments. The connector **2200** is similar to the LED assembly **700** of FIG. **7**, except that the connector **2200** includes multiple connection points for joining together multiple LED modules, such as module **705** of FIG. **7**. For example, the connector **2200** can include one or more male connectors **2205** and one or more female connectors **2210**, which are configured to couple together with corresponding female connectors and male connectors, respectively, of mating LED modules. For example, FIG. **23** illustrates LED assemblies **2300** coupled together via a connector **2200**, in accordance with certain exemplary embodiments.

Although depicted in the figures as a substantially rectangular member, which couples LED assemblies **2300** together at right angles, a person of ordinary skill in the art will recognize that the connector **2200** can have any shape and can couple the LED assemblies **2300** together in any configuration. For example, the LED connector **2200** may have a substantially curved shape in certain alternative exemplary embodiments. In addition, although depicted in the figures as having a substantially smaller length than the lengths of the LED assemblies **2300**, the LED connector **2200** can have any length, whether longer or shorter than—or the same as—the length of the LED assemblies **2300**, in certain alternative exemplary embodiments. Further, the connection points **2205** and **2210** may be located somewhere other than along the bottom side of the connector **2200** in certain alternative exemplary embodiments. For example, the connection points **2205** and **2210** may be located along a top side of the connector **2200**, similar to the connector **125** of FIG. **1**, in certain alternative exemplary embodiments.

In the embodiment shown in FIG. **22**, the connector **2200** includes a bottom structure **2220**, which may provide struc-

tural support, and/or dissipate heat from, the LED's on the connector **2200**, substantially as with the members **140**, **240**, and **1600** described above. The connector **2200** also may provide power to the LED's, as described in connection with the surfaces **910** of FIG. **9**, in certain exemplary embodiments. In certain alternative exemplary embodiments, the connector **2200** may not include LED's.

FIG. **24** illustrates an LED assembly **2400**, in accordance with certain additional alternative exemplary embodiments. The LED assembly **2400** is similar to those described in FIGS. **22** and **23**, except that the LED assembly **2400** includes an integral connector feature **2405**, which enables multiple LED assemblies (that may or may not be similar to the LED assembly **2400** or other of the assemblies described herein) to be coupled to the LED assembly **2400**. For example, one additional LED assembly (not shown) may couple to the LED assembly **2400** via a first connector **2210***a* integral in an end of the LED assembly **2400**, and another additional LED assembly (not shown) may coupled to the LED assembly **2400** via a second connector **2210***b* integral in the end of the LED assembly **2400**. The bottom structure **2460** of the LED assembly **2400** includes a cut-out portion **2420** around the connector **2410***a*, to allow the mating assemblies adequate room to interface at the connection point. As would be recognized by a person of ordinary skill in the art, the size and shape of the cut-out portion **2420** may vary depending on the sizes and shapes of the mating assemblies.

FIG. **25** illustrates an LED assembly **2500**, in accordance with certain additional alternative exemplary embodiments. The LED assembly **2500** is substantially similar to the assembly **100** described above in connection with FIG. **1**, except that, instead of being mounted to a member **140**, the LED modules **105** are mounted to a bracket **2505**, such as a sheet metal **2505**. The bracket **2505** is typically used when being used in conjunction with a tooled housing when the tool housing includes features that the bracket **2505** attached to more easily than the member **140**. The bracket **2505** can also have a manufacturing cost that is less than the member **140**.

FIG. **26** illustrates an LED assembly **2600**, in accordance with certain additional alternative exemplary embodiments. The LED assembly **2600** is similar to assembly **700** described above, except that one or more magnets **2605***a* and **2605***b* couple the assembly **2600** (including LED modules **105** and member **240** to a desired surface. For example, the magnets **2605***a* and **2605***b* may be mounted to the surface via an adhesive, one or more screws, or other fastening means, and a magnetic force between the magnets **2605***a* and **2605***b* and the LED modules **105** can couple together the magnets **2605***a* and **2605***b* and the LED modules **105**. Thus, the magnets **2605***a* and **2605***b* may mechanically couple together the LED modules **105** and member **240** without the need for—or in addition to—mechanical fasteners, such as screws, rivets, etc.

Similar to the embodiment described above with respect to FIGS. **9** and **10**, the magnets **2605***a* and **2605***b* can electrically couple the LED assembly **2600** to a powered surface, such as a rail and/or track, which powers the LED modules **105**. The magnet **2605***a* can have a first polarity, and the magnet **2605***b* can have a second polarity that is different than the first polarity. The magnets can be insulated, e.g., by being coated with an anodized material, to electrically isolate the magnets **2605***a* and **2605***b* with respect to one another. Power may be provided to the LED's of the LED modules **105** via the magnets **2605***a* and **2605***b* without the need for additional wires or other electrical connectors.

FIG. **27** illustrates an LED assembly **2700**, in accordance with certain additional alternative exemplary embodiments. The LED assembly **2700** is similar to assembly **2600** described above, except that, instead of magnets mechanically and electrically coupling the LED modules **105**, clips **2705***a* and **2705***b* mechanically and electrically couple the LED modules **105** to the desired surface. Like the magnets **2605***a* and **2605***b*, the clips **2705***a* have different polarities that allow power to be provided to the LED's of the LED modules **105** without the need for additional wires or other electrical connectors. Ends **2705***aa* and **2705***ba* of the clips **2705***a* and **2705***b*, respectively, rest on and engage a conductive top surface of the LED module **105**, and current flows through a circuit, which includes the clips **2705***a* and **2705***b*, the conductive top surface of the LED module **105**, and a power source (not shown) to which the clips **2705***a* and **2705***b* are coupled. For example, the clips **2705***a* and **2705***b* may be coupled to a powered surface, such as a rail and/or track.

FIGS. **28** and **29**A-C illustrate a latching mechanism **2800** and a latching system **2900** for securing the member **2940** to a mounting plate **220**, in accordance with certain additional alternative exemplary embodiments. The latching mechanism **2800** includes a lower member **2805** and an upper member **2810**. In certain exemplary embodiments, the upper member **2810** is rotatably coupled to the lower member **2805** at the shaft **2815**, such that upper member **2810** is capable of rotating independent of the lower member **2805**. The upper member **2810** includes a flange or lip **2820** along one end that engages the member **2940** when installed. In certain exemplary embodiments, the upper member **2810** thins out as it extends from the axis of rotation to the lip **2820**.

In operation, the lower member **2805** of the latching mechanism **2800** is placed within one of the apertures **2830** in the mounting plate **220**. This is done for multiple latching members **2800** in two linear rows along the longitudinal axis of the member **2940**. Once place in the aperture **2930**, the lower member **2805** can be rotated to prevent if from coming back out of the aperture. While not shown, the bottom side of the mounting plate **220** can include flanges bumps or detents that prevent the bottom member **2805** for rotating back to a position where it can be removed from the aperture **2930**.

Once the bottom members **2805** are positioned in the apertures **2930**, the member **2940** is placed on the mounting plate **220** and the top member **2810** is rotated from a release position **2810***a* to a locked position **2810***b*. In the locked positioned **2810***b*, the lip **2820** of the latching mechanism **2800** engages or contacts a flange member **2945** that extends longitudinally along each of the two sides of the member **2940**. In certain exemplary embodiments, the top members **2810** are rotated about 90 degrees to move them from the release position **2810***a* to the locked position **2810***b*.

FIG. **30** illustrates a latching mechanism **3005** and a latching system **3000** for securing the member **2940** to a mounting plate **220**, in accordance with certain additional alternative exemplary embodiments. The latching mechanism **3005** is a longitudinal member that extends the length of or a portion of the length on the longitudinal side of the member **2940**. The longitudinal latching mechanism **3005** includes multiple tabs **3010** extending down from and spaced apart along a first side **3012** of the mechanism **3005**. The mechanism **3005** also includes an opposing second side **3015** that engages or is disposed adjacent to the flange **2945** of the member **2940**. Between the first side **3012** and the second side **3015** is a retaining side **3020**. The retaining side **3020** can be straight or have a shape that is complementary to the shape of the flange **2945** to rest against the flange **2945** and hold the member **2940** in place.

In operation, the member **2940** is placed on the mounting plate **220**. Each tab **3010** of the latching mechanism **3005** is placed within one of the apertures **3030** in the mounting plate

220. Once the tabs **3010** are positioned in the apertures **3030**, the retaining side **3020** rests against or applies a force along the flange **2945** of the member to hold the member **220** in place. In an alternative embodiment, once the tabs **3010** are positioned in the apertures **3030**, the second side **3015** of the mechanism **3005** is rotated towards the flange **2945** until the retaining side **3020** engages the flange **2945**.

Although specific embodiments of the claimed invention have been described above in detail, the description is merely for purposes of illustration. It should be appreciated, therefore, that many aspects of the claimed invention were described above by way of example only and are not intended as required or essential elements of the claimed invention unless explicitly stated otherwise. Various modifications of, and equivalent steps corresponding to, the disclosed aspects of the exemplary embodiments, in addition to those described above, can be made by a person of ordinary skill in the art, having the benefit of this disclosure, without departing from the spirit and scope of the invention defined in the following claims, the scope of which is to be accorded the broadest interpretation so as to encompass such modifications and equivalent structures.

What is claimed is:

1. A light emitting diode ("LED") assembly, comprising:

an elongated member comprising a top surface and protrusions extending from opposite edges of the top surface, the protrusions and top surface defining a channel that extends substantially along a length of the elongated member, each of the protrusions comprising an inner portion having an inner profile and an outer portion having an outer profile;

a first cover that mechanically couples to the inner profile of the inner portion of each of the protrusions in a first time;

a second cover that mechanically couples to the outer profile of the outer portion of each of the protrusions in a second time; and

at least one LED module coupled to the top surface of the elongated member, within the channel, each LED module comprising a plurality of LEDs coupled to a substrate,

wherein the first time and the second time do not overlap with each other,

wherein the elongated member further comprises additional protrusions positioned adjacent to the protrusions, wherein the additional protrusions are bendable to secure the at least one LED module to the elongated member in the channel.

2. The LED assembly of claim **1**, wherein the at least one LED module comprises a first LED module and a second LED module, wherein the second cover comprises an over-optic for a first retrofit of a T8 lamp, and the first cover comprises an over-optic for a second retrofit of a T5 lamp, wherein the first retrofit of the T5 lamp is the first LED module used in the first time, and wherein the second retrofit of the T8 lamp is the second LED module used in the second time.

3. The LED assembly of claim **1**, wherein the plurality of LEDs comprise one or more rows of LEDs.

4. The LED assembly of claim **3**, wherein at least one row of LEDs is oriented linearly.

5. The LED assembly of claim **3**, wherein at least one row of LEDs is oriented nonlinearly.

6. The LED assembly of claim **1**, wherein the plurality of LEDs comprise two or more rows of LEDs, wherein one of the two or more rows of LEDs is independently controlled from a remainder of the two or more rows of LEDs.

7. The LED assembly of claim **1**, wherein the at least one LED module comprises a first LED module and a second LED module, each of the first and second LED modules further comprising at least one connector disposed adjacent an end of the substrate, the connector of the first LED module interfacing with the connector of the second LED module to complete an electrical connection between the first and second LED modules.

8. The LED assembly of claim **1**, wherein the at least one LED module comprises a first LED module and a second LED module, each of the first and second LED modules further comprising a first connector disposed adjacent an end of the substrate and a second connector disposed adjacent an opposing end of the substrate, the first connector of the first LED module interfacing with the second connector of the second LED module to complete an electrical connection between the first and second LED modules.

9. The LED assembly of claim **8**, wherein each of the first and second connectors of the first LED module is not visible when the first connector of the first LED module interfaces with the second connector of the second LED module.

10. The LED assembly of claim **8**, wherein the first and second connectors of the first LED module are disposed substantially orthogonally with respect to one another.

11. The LED assembly of claim **8**, wherein each of the first and second connectors of the first LED module is disposed along a surface beneath the plurality of LEDs.

12. The LED assembly of claim **1**, further comprising a rod, wherein the elongated member further comprises a bottom surface and extensions extending outwardly from the bottom surface forming a second channel therebetween, the second channel receiving the rod therein, and wherein the rod is manipulated to move the elongated member.

13. The LED assembly of claim **12**, wherein the rod comprises a heat pipe.

14. A light emitting diode ("LED") assembly, comprising:

an elongated member comprising a top surface and protrusions extending from opposite edges of the top surface, the protrusions and top surface defining a channel that extends substantially along a length of the elongated member;

at least one LED module coupled to the top surface of the elongated member, within the channel, each LED module comprising a plurality of LEDs coupled to a substrate;

an elongated mounting plate comprising a plurality of openings; and

a plurality of spring clips extending through the openings in the mounting plate and coupling the mounting plate to the elongated member, a portion of each of the spring clips engaging a groove formed within at least one longitudinal edge of the elongated member,

wherein the protrusions have profiles that allow a first cover to be installed at a first time and a second cover to be installed at a second time, side edges of the first cover being disposed within the channel when the first cover is installed, side edges of the second cover engaging outer edges of the protrusions when the second cover is installed.

15. The LED assembly of claim **1**, wherein the additional protrusions and the protrusions form an additional cavity into which a third cover is disposed in a third time.

16. An elongated member for a light fixture, comprising:

a top surface that receives at least one LED module; and

at least one pair of protrusions, wherein each of the at least one pair of protrusions extend on opposite sides of the top surface,

wherein adjacent protrusions of the at least one pair of the protrusions each define a channel that extends substantially along a length of the elongated member,

wherein each protrusions of the at least one pair of protrusions comprises an inner portion having an inner profile and an outer portion having an outer profile,

wherein the at least one LED module is disposed in a central channel formed by an inner-most pair of protrusions of the at least one pair of protrusions,

wherein the inner profile of one pair of protrusions mechanically couples to a first cover in a first time when the at least one LED module is of a first type, and

wherein the outer profile of the one pair of protrusions mechanically couples to a second cover in a second time when the at least one LED module is of a second typ;

wherein at least one protrusion of the at least one pair of protrusions is bendable.

17. The LED assembly of claim **1**, wherein the inner profile of the protrusions defines a groove into which side ends of the first cover are disposed.

18. The LED assembly of claim **14**, wherein the inner profile of the protrusions defines a groove into which side ends of the first cover are disposed.

19. The LED assembly of claim **14**, wherein each spring clip comprises:

a base having opposing ends;

a first arm coupled to one end of the base;

a second arm coupled to the opposing end of the base,

wherein a portion of each arm engages the corresponding groove formed within each of the longitudinal edges of the elongated member.

20. The LED assembly of claim **14**, further comprising:

a connector disposed on an end of the elongated member, wherein the connector couples to a connector receptacle disposed on an adjacent elongated member of an adjacent LED assembly, wherein the connector enables electrical transmission between the at least one LED module and at least one adjacent LED module of the adjacent LED assembly.

* * * * *