IN THE UNITED STATES DISTRICT COURT
FOR THE EASTERN DISTRICT OF TEXAS
(MARSHALL DIVISION)

BISHOP DISPLAY TECH LLC,	§	
	§	
Plaintiff,	§	
	§	**C.A. No. 2:25-cv-310**
v.	§	
	§	**JURY TRIAL DEMANDED**
BOE TECHNOLOGY GROUP CO., LTD.,	§	
	§	
Defendant.	§	
	§	
	§	

PLAINTIFF'S ORIGINAL COMPLAINT FOR PATENT INFRINGEMENT

Plaintiff Bishop Display Tech LLC ("Bishop" or "Plaintiff") files this Original Complaint against Defendant BOE Technology Group Co., Ltd. ("BOE" or "Defendant") for infringement of U.S. U.S. Patent No. 7,583,347 (the "'347 patent"), U.S. Patent No. 7,414,682 (the "'682 patent"), U.S. Patent No. 7,995,047 (the "'047 patent"), and U.S. Patent No. 8,093,830 (the "'830 patent") (collectively, the "Asserted Patents").

THE PARTIES

1. Plaintiff is a Texas limited liability company with its principal place of business in the Eastern District of Texas.

2. On information and belief, BOE Technology Group Co., Ltd. is a company organized and existing under the laws of China, having a principal place of business at No. 12, Xihuanzhong Road, BDA, Beijing, 100176, China.

3. Defendant is engaged (including, as relevant, in the past) in making, using, selling, offering for sale, and/or importing, and/or inducing its respective subsidiaries, affiliates, distributors, suppliers, business partners retail partners, and customers in the making, using,

selling, offering for sale, and/or importing throughout the United States, including within this District, the following products accused of infringement (the "Accused Products"):

- BOE liquid crystal modules comprising thin-film transistor liquid crystal displays ("TFT-LCDs") (collectively, "LCMs");
- BOE TFT-LCDs; and
- Products comprising BOE TFT-LCDs or LCMs.
- Components of the foregoing.

4. Defendant also represents itself as a global entity with a substantial presence in the United States, both directly and through stream of commerce sales of Accused Products that are intended to, and in fact are, sold in the United States. *See, e.g.*, https://www.boe.com/en/about/index ("[Defendant's] subsidiaries span 20 countries and regions, including the United States, Germany, Britain, France, Switzerland, Japan, South Korea, Singapore, India, Russia, Brazil and the United Arab Emirates. Its service network covers major regions in Europe, the Americas, Asia, Africa and beyond."). In addition, "one out of four display products in the world comes from BOE" and its display products, including the Accused Products, are intended to be sold and used "abroad." *Id*. "[I]n 2022, BOE remained No. 1 in the world by shipments of LCD panels for smart phone, tablet, notebook, monitor and TV." *Id*.

5. On information and belief, BOE Technology America, Inc. ("BOEUSA") is a California corporation with regular and established places of business at 2350 Mission College Blvd., Suite 840, Santa Clara, CA, 95054, USA and 220329 State Highway 249 Suite 180, Houston, TX, 77070. On information and belief, BOEUSA is wholly owned and controlled by BOE. On information and belief, BOE established BOEUSA for the purpose of strategic brand

customer development in the United States and North America and to provide services and sales to BOE's existing U.S. brand customers.

6. On information and belief, BOE controls (and has controlled) BOEUSA, as well as many other subsidiaries. On information and belief, BOEUSA provides (and has provided) sales, distribution, testing, research, and/or development support in the United States for its ultimate parent BOE, which owns BOEUSA. BOEUSA is, and has been, agents of BOE. At the direction and control of BOE, its subsidiaries, including BOEUSA, and/or other .- subsidiaries have made, used, sold, offered for sale, and/or imported and continue to make, use, sell, offer for sale, and/or import Accused Products in the United States and this District.

7. BOE operates (and has operated) in agency with its respective foreign and U.S.-based subsidiaries, affiliates, distributors, retail partners, suppliers, and customers, to provide a distribution channel of infringing products within this District and the U.S. nationally. BOE and/or its respective agents and foreign and U.S.-based subsidiaries, affiliates, distributors, retail partners, suppliers, and customers, purposefully direct (and has directed) the Accused Products into established distribution channels within this District and the U.S. nationally.

8. On information and belief, BOE, including its respective U.S. and foreign-based employees, agents, distributers, affiliates, business partners, retail partners, and customers (which act as part of a global network and supply chain of overseas sales and manufacturing subsidiaries), have operated as agents of one another and vicariously as parts of the same business group to work in concert together and enter into agreements that are nearer than arm's length. BOE and its U.S. and foreign-based employees, agents, distributers, affiliates, business partners, retail partners, and/or customers, individually and/or in concert, conduct business (and have conducted business) in the United States, including importing, shipping, distributing, offering to sell, and selling the

Accused Products that incorporate devices, systems, and processes that infringed the Asserted Patents in Texas and this District. *See Trois v. Apple Tree Auction Center, Inc.*, 882 F.3d 485, 490 (5th Cir. 2018) ("A defendant may be subject to personal jurisdiction because of the activities of its agent within the forum state…."); *see also Cephalon, Inc. v. Watson Pharmaceuticals, Inc.*, 629 F. Supp. 2d 338, 348 (D. Del. 2009) ("The agency theory may be applied not only to parents and subsidiaries, but also to companies that are 'two arms of the same business group,' operate in concert with each other, and enter into agreements with each other that are nearer than arm's length.").

9. BOE and its subsidiaries share the same management, common ownership, advertising platforms, facilities, distribution chains and platforms, and infringing product lines and products involving related technologies. On information and belief, Defendant operates (and has operated) as a single business entity and/or in concert with its affiliates, distributors, subsidiaries, suppliers, retail partners, customers, and/or agents to manufacture, sell, offer to sell, import, market, advertise, and/or otherwise promote the Accused Products in the United States, including in the State of Texas generally and this District in particular.

10. On information and belief, BOE and its subsidiaries operate as a unitary business venture and are jointly and severally liable for the acts of patent infringement alleged herein.

11. Through offers to sell, sales, imports, distributions, and other related agreements to transfer ownership of Defendant's Accused Products by and/or to affiliates, distributors, subsidiaries, suppliers, business partners, retail partners, customers, and/or agents, Defendant is operating in (and has operated in) and maintaining (and maintained) a significant business presence in the U.S. and/or through its U.S. subsidiaries or agents, Defendant has done (and does) business in the U.S., the state of Texas, and in the Eastern District of Texas.

JURISDICTION AND VENUE

12. Plaintiff incorporates paragraphs 1 through 11 herein by reference.

13. This action arises under the patent laws of the United States, namely 35 U.S.C. §§ 271, 281, and 284-285, among others.

14. This Court has subject matter jurisdiction pursuant to 28 U.S.C. §§ 1331 and 1338(a).

15. Venue is proper for BOE in this District pursuant to 28 U.S.C. §§ 1391(c). BOE is a foreign entity and may be sued in any judicial district under 28 U.S.C. § 1391(c)(3).

16. This Court has general and specific personal jurisdiction over the Defendant pursuant to due process and/or the Texas Long Arm Statute because, inter alia, (i) the Defendant has done and continue to do business in Texas and/or (ii) the Defendant has, directly and through intermediaries, distributers, agents, and/or others committed and continues to commit acts of patent infringement in the State of Texas, including making, using, offering to sell, and/or selling Accused Products in Texas, and/or importing Accused Products into Texas, including by Internet sales and/or sales via business partners, retail and wholesale stores, inducing others to commit acts of patent infringement in Texas, and/or committing at least a portion of any other infringements alleged herein. Defendant has placed, and is continuing to place, infringing products into the stream of commerce, via established distribution channels, with the knowledge and/or understanding that such products are sold in Texas, including in this District. Defendant has derived substantial revenues from its infringing acts occurring within Texas and within this District. Defendant has substantial business in this State and District (including, as relevant, in the past), including: (A) conducting at least part of its infringing activities alleged herein; and (B) regularly doing or soliciting business, engaging in other persistent conduct, and/or deriving

substantial revenue from infringing goods offered for sale, sold, and/or imported, and services provided to Texas residents vicariously through and/or in concert with its respective alter egos, intermediaries, agents, distributors, importers, customers, subsidiaries, and/or consumers.

17. In addition, Defendant has employees in the United States.

18. In addition, Defendant is aware that the Accused Products are shipped to, offered for sale, sold, and used in, the United States given that they obtain UL Solutions certifications for the Accused Products so that they comply with the laws and regulations of the United States For example, Accused Product Dell laptop model no. P89F includes Accused Product BOE LCM/LCD model no. NV156FHM-N3D, which includes a UL Solutions mark indicating compliance with the laws and regulations of the United States:

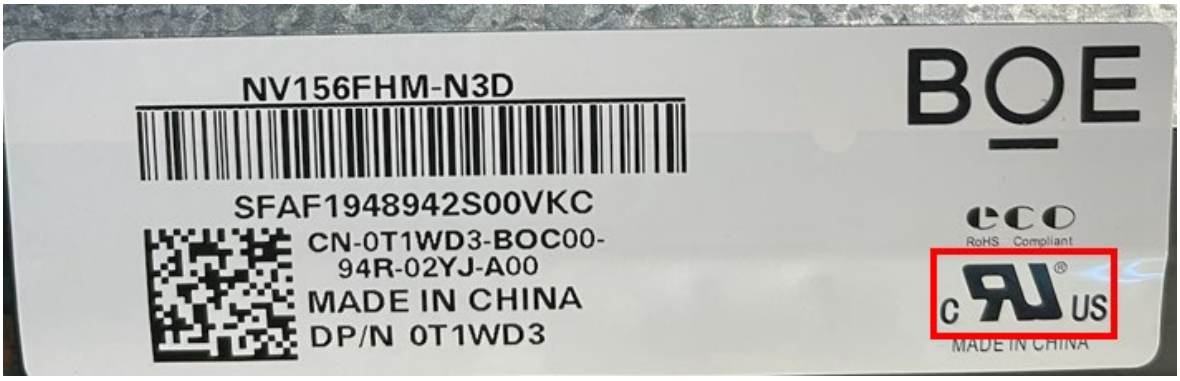

Also, given the Defendant's long history as one of the main suppliers of display components offered by at least Acer, Asus, Dell, HP, and Lenovo, Defendant has knowledge that its customers, including at least Acer, Asus, Dell, HP, and Lenovo, have substantial operations in the United States, as well as substantial market share in the United States market for LCD displays; Defendant is well-aware that the Accused Products are destined for the United States and Texas (e.g., via the such entities' supply chains, distributers, retailers, etc.). Indeed, the U.S. market for the Accused Products is substantial:

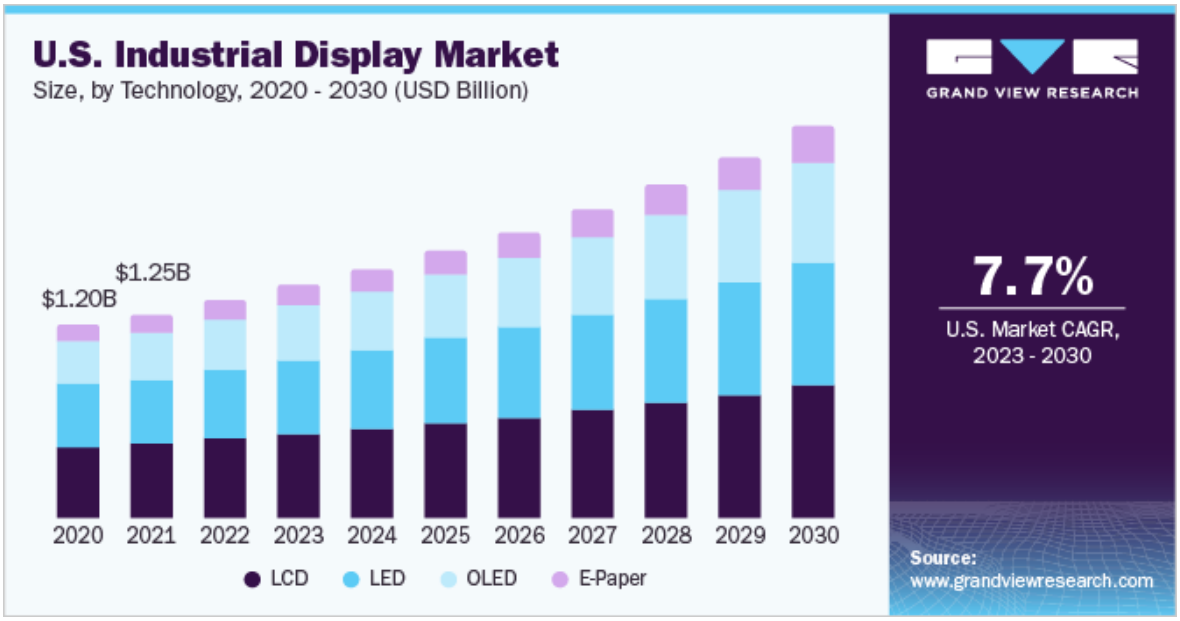

19. This Court has personal jurisdiction over Defendant, directly or through agents, intermediaries, distributors, importers, business partners, customers, subsidiaries, and/or consumers. Through direction and control (including, as relevant, in the past) of such subsidiaries, affiliates, business partners, distributors, retail partners, agents, and/or customers, Defendant has committed acts of direct and/or indirect patent infringement within Texas, and elsewhere within the United States, giving rise to this action and/or have established minimum contacts with Texas such that personal jurisdiction over Defendant would not offend traditional notions of fair play and substantial justice. Upon information and belief, Defendant compensate its U.S.-based subsidiaries and/or agents for their sales and/or technical support services in the United States. As such, Defendant has a direct financial interest in its U.S.-based subsidiaries and/or agents, and/or partners, distributers, or customers, and vice versa.

20. Personal jurisdiction is proper because Defendant has committed acts of infringement in this District. This Court has personal jurisdiction over Defendant because, *inter*

alia, this action arises from activities Defendant purposefully directed towards the State of Texas and this District.

21. Exercising personal jurisdiction over Defendant in this District would not be unreasonable given Defendant's contacts in this District, the interest in this District of resolving disputes related to products sold herein, and the harm that would occur to Plaintiff who resides in this District.

22. In addition, Defendant has knowingly induced infringement within this District by advertising, marketing, offering for sale and/or selling devices pre-loaded with infringing functionality within this District, to consumers, customers, manufacturers, distributors, resellers, partners, end users, and/or Acer, Asus, Dell, HP, and Lenovo, and providing instructions, user manuals, advertising, and/or marketing materials which facilitate, direct or encourage the use of infringing functionality with knowledge thereof.

23. For example, Defendant's website advertises the type of components and Accused Products that are infringing in this case:

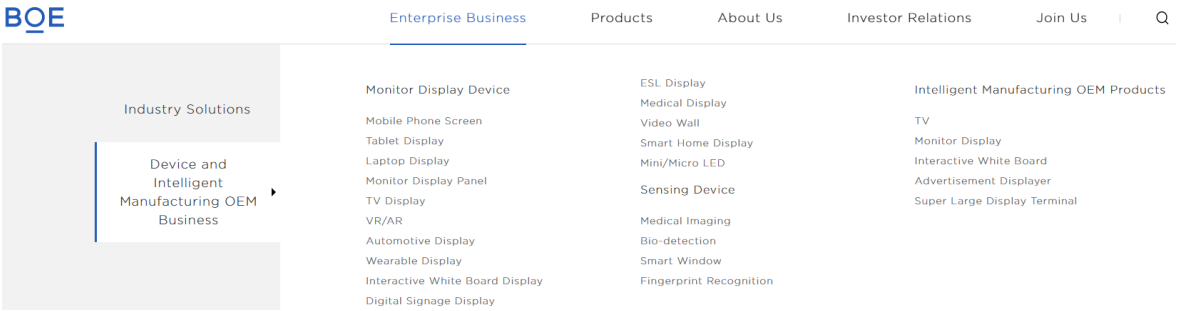

https://www.boe.com/en/.

24. Personal jurisdiction also exists specifically over Defendant because Defendant, directly or through affiliates, subsidiaries, business partners, agents, and/or intermediaries, transact business (or have transacted business) in this State or purposefully directed business at this State by making, importing, offering to sell, selling, and/or having sold infringing products within this State and District or purposefully directed at this State or District.

25. To the extent Defendant is not subject to jurisdiction in any state's court of general jurisdiction, exercising jurisdiction over Defendant in this State and this District would be consistent with due process and this State's long-arm statute and under national contacts in light of the facts alleged in this Complaint.

26. In addition, Defendant, directly or through affiliates, subsidiaries, agents, and/or intermediaries, have placed infringing products into the stream of commerce knowing they would be sold and used in Texas, and economically benefit from the retail sale of infringing products in this State, including in this District.

27. Defendant has advertised its infringing products to customers in Texas and this District through its website.

28. On information and belief, Defendant controls (or has controlled) or otherwise direct (or directed) and authorizes (or authorized) all activities of its U.S.-based (or foreign-based with the knowledge that the Accused Products are directed to the United States and this District) agents and/or sales and/or distribution subsidiaries. Such directed and authorized activities include the U.S.-based (and/or foreign-based) subsidiaries' and/or agents having used, offered for sale, sold, and/or imported the Accused Products, their components, processes, and/or products containing the same that incorporated the fundamental technologies and claims of the Asserted Patents. Defendant's U.S.-based (and/or foreign-based) sales and/or distribution subsidiaries and/or agents were authorized to import, distribute, sell, or offer for sale the Accused Products on behalf of Defendant. For example, Defendant researched, designed, developed, and manufactured the Accused Products, and then directed its U.S.-based (and/or foreign-based) sales subsidiaries, distributers, business partners agents, and/or others to import, distribute, offer for sale, and sell the Accused Products in the United States. *See, e.g., United States v. Hui Hsiung*, 778 F.3d 738, 743

(9th Cir. 2015) (finding that the sale of infringing products to third parties rather than for direct import into the U.S. did not "place [defendants'] conduct beyond the reach of United States law [or] escape culpability under the rubric of extraterritoriality"). Thus, Defendant conducted infringing activities, and Defendant's U.S.-based (and foreign-based) sales subsidiaries and/or distributers and/or agents and/or business partners conducted infringing activities on behalf of Defendant.

29. On information and belief, Defendant's U.S.-based (and/or foreign-based) sales and/or distribution subsidiaries' and/or agents' presence (including in the past) in the United States gave Defendant substantially the same business advantages that it would have enjoyed if Defendant conducted its business through its own offices or paid agents. Defendant's U.S.-based (and/or foreign-based) sales subsidiaries and/or distributers and/or agents were authorized to import, distribute, sell, and offer for sale Defendant's products, including the Accused Products, as well as their components and processes related to the same, on behalf of Defendant. For example, Defendant's U.S.-based (and/or foreign-based) sales subsidiaries and/or agents operated within Defendant's global network and supply chain of sales. In the U.S., including within the Eastern District of Texas, the Accused Products, as well as their components and processes related to the same, were imported, distributed, offered for sale, and/or sold.

30. Via Defendant's alter egos, agents, business partners, intermediaries, distributors, importers, customers, subsidiaries, and/or consumers that maintained a business presence, operating in, and/or residing in the U.S., Defendant's products, including products and processes accused of infringing the Asserted Patents, are or have been widely distributed and sold in Texas including within this District. *See Litecubes, LLC v. Northern Light Products, Inc.*, 523 F.3d 1353, 1369-70 (Fed. Cir. 2008) ("[T]he sale [for purposes of § 271] occurred at the location of the

buyer."); *see also Semcon IP Inc. v. Kyocera Corp.*, No. 2:18-cv-00197-JRG, 2019 WL 1979930, at *3 (E.D. Tex. May 3, 2019) (denying accused infringer's motion to dismiss because plaintiff sufficiently plead that purchases of infringing products outside of the United States for importation into and sales to customers in the U.S. may constitute an offer to sell under § 271(a)).

31. On information and belief, Defendant has placed infringing products and/or products that practiced infringing processes into the stream of commerce via established distribution channels comprising at least its subsidiaries, business partners, affiliates, distributors, and/or agents or customers, with the knowledge and/or intent that those products were imported, used, offered for sale, and sold in the United States and Texas, including in this District. As a result, Defendant has, vicariously through and/or in concert with alter egos, agents, intermediaries, distributors, affiliates, importers, customers, subsidiaries, and/or consumers, placed the Accused Products into the stream of commerce via established distribution channels with the knowledge and/or intent that those products were sold and continue to be sold in the United States and Texas, including in this District.

32. The minimum contacts test is satisfied because Defendant delivers its products (*e.g.,* TFT-LCDs and/or LCMs) into the stream of commerce with the expectation that they will be purchased by consumers in Texas. *Beverly Hills Fan Co. v. Royal Sovereign Corp.*, 21 F.3d 1558, 1566 (Fed. Cir. 1994) (quoting *World-Wide Volkswagen Corp. v. Woodson*, 100 S. Ct. 559 (1980)). For example, and on information and belief (and as provided for herein), Defendant imports, and/or has imported and/or shipped infringing Accused Products into the United States through and with its supply chain partner and/or customers, such as Acer, Asus, Dell, HP, and Lenovo, (including, but not limited to, BOE subsidiaries and/or affiliates and/or agents, such as BOEUSA). Defendant supplies its Accused Products (*e.g.,* TFT-LCDs and/or LCMs) to its

customers, subsidiaries, affiliates, agents, and/or distributors knowing that its accused products will be incorporated into accused downstream display products (*e.g.*, TVs, laptops, monitors) that are offered for sale, sold, imported, and/or used by BOE, its customers (e.g., Acer, Asus, Dell, HP, and Lenovo), Best Buy Walmart, and/or Amazon in the United States and this District. The Accused Products were (and are) directed to this District and were (and are) available for purchase in this District via retailers, such as Best Buy, Walmart, and Amazon. The lengthy and complex distribution chain does not insulate Defendant from suit in Texas.

33. Defendant intentionally placed its TFT-LCDs and/or LCMs in a distribution chain flowing from Asia to the United States, Texas, and this District. For example, Defendant intentionally places its TFT-LCDs and/or LCMs in a distribution or supply chain knowing that such TFT-LCDs and or LCMs (*e.g.*, BOE LCM/LCD model no. NV156FHM-N3D) ultimately arrive in the United States market and this District through, at least, its direct and indirect customers' monitors, laptops, and/or TVs (*e.g.*, Dell laptop model no. P89F). Defendant, through its sales of TFT-LCDs and/or LCMs for application in downstream display devices, such as TVs, monitors, and/or laptops knew (or should have reasonably known) the likely destination of the products, where Defendant's conduct and connections with Texas and this District were such that Defendant should have reasonably anticipated being brought to court in this District. Indeed, Defendant's TFT-LCDs and or LCMs include a UL Solutions mark indicating compliance with the laws and regulations of the United States further evidencing that Defendant knew or should have known that its products were destined for the United States and this District.

34. Moreover, Defendant is the assignee of a substantial number of United States patents and patent applications, including use of U.S. patent counsel to procure such patents in

their name. Thus, Defendant sought out the United States market, evidenced by seeking patent protection in the United States.

35. Also by way of example, and on information and belief, Defendant has (and have had) U.S. based (and/or foreign-based) employees that work in connection with the Accused Products, including, but not limited to, employees affiliated with BOEUSA.

36. Defendant has and had a commercial relationship with significant players in the electronic display industry (e.g., Acer, Asus, Dell, HP, and Lenovo), and Defendant accesses the Texas consumer-electronics market vis-à-vis that relationship. Given Defendant's relationship with such entities, which are behemoths for display products (e.g., TVs, laptops, and monitors) in the United States market, jurisdiction in this Court is fair and reasonable.

37. In the alternative, the Court has personal jurisdiction over Defendant under Federal Rule of Civil Procedure 4(k)(2), because the claims for patent infringement in this action arise under federal law, Defendant is not subject to the jurisdiction of the courts of general jurisdiction of any state and exercising jurisdiction over Defendant is consistent with the U.S. Constitution. Exercising jurisdiction comports with due process given Defendant's purposeful availment from the sales of its customers' (direct and indirect) display products (e.g., TVs, laptops, monitors, mobile phones, tablets, IoT devices, medical devices, signage, automotives) incorporating Defendant's TFT-LCDs and/or LCMs sold in the Unites States and this District.

COUNT I
(Infringement of U.S. Patent No. 7,583,347)

38. Plaintiff incorporates paragraphs 1 through 37 herein by reference.

39. This cause of action arises under the patent laws of the United States, and in particular, 35 U.S.C. §§ 271, *et seq*.

40. Plaintiff is the owner of the ’347 patent with all substantial rights to the ’347 patent including the exclusive right to enforce, sue, and recover damages for past infringement.

41. The ’347 patent is valid, enforceable and was duly issued in full compliance with Title 35 of the United States Code.

DIRECT INFRINGEMENT (35 U.S.C. §271(a))

42. Defendant has infringed literally, and/or under the Doctrine of Equivalents, one or more claims of the ’347 patent in this District and elsewhere in Texas and the United States.

43. Defendant directly infringed the ’347 patent via 35 U.S.C. § 271(a) by having made, offered for sale, sold, used, tested, and/or imported those Accused Products, their components and processes, and/or products containing the same that incorporate the fundamental technologies and claims of the ’347 patent. For example, Defendant, either by itself and/or via an agent, directly infringed the ’347 patent by offering for sale, selling, and/or importing those Accused Products, their components and processes, and/or products containing the same that incorporate the fundamental technologies and claims of the ’347 patent, to and/or via its alter egos, agents, intermediaries, distributors, importers, customers, subsidiaries, and/or consumers. Furthermore, on information and belief, Defendant sold and made some Accused Products outside of the United States, delivered those products to its customers, agents, distributors, and/or subsidiaries in the United States, or in the case that it delivered the Accused Products outside of the United States it did so intending and/or knowing that those products were destined for the United States and/or designed those products for sale in the United States, thereby directly infringing the ’347 patent. *See, e.g., Lake Cherokee Hard Drive Techs., L.L.C. v. Marvell Semiconductor, Inc.*, 964 F. Supp. 2d 653, 658 (E.D. Tex. 2013). Furthermore, BOE directly infringed the ’347 patent through its direct involvement in the activities of its subsidiaries, including BOEUSA, including by selling

and offering for sale the Accused Products directly to such subsidiaries and importing the Accused Products into the United States for such subsidiaries. Such subsidiaries conduct activities that constitute direct infringement of the ’347 patent under 35 U.S.C. § 271(a) by having made, used, tested, offered for sale, sold, and/or imported those Accused Products. On information and belief, BOE offered for sale, sold, and imported the Accused Products within the U.S. to, for example, its distributors, customers, subsidiaries, importers, and/or consumers. Further, BOE is vicariously liable for this infringing conduct of its U.S.-based subsidiaries, e.g., BOEUSA, (under both the alter ego and agency theories) because, as an example and on information and belief, BOE and its subsidiaries are essentially the same company, and BOE has the right and ability to control its subsidiaries infringing acts and receives a direct financial benefit from the infringement of its U.S.-based subsidiaries, e.g., BOEUSA.

44. For example, Defendant infringed claim 1 of the ’347 patent. The products accused of infringing the ’347 patent comprise a liquid crystal display. For example, Dell’s laptop model no. P89F includes BOE’s LCM/LCD model no. NV156FHM-N3D, such that each comprises a liquid crystal display:

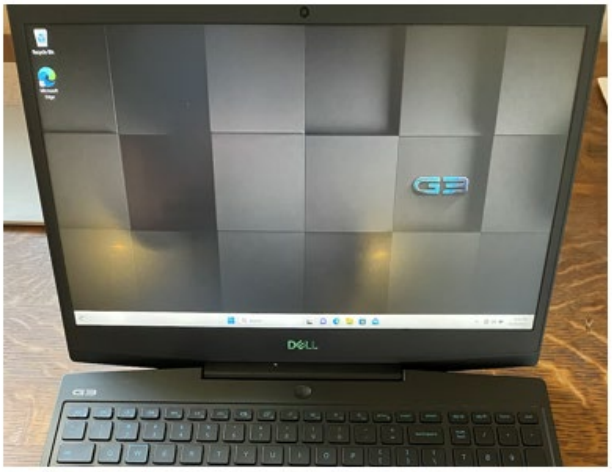

45. The products accused of infringing the ’347 patent comprise a liquid crystal panel including an array substrate having an upper surface on which a common electrode, a pixel electrode, a scanning signal line, a video signal line, and a semiconductor switching device are formed, an opposing substrate disposed so as to be opposite to the upper surface of the array substrate, and a liquid crystal layer disposed between the array substrate and the opposing substrate. For example, an examination of BOE’s LCM/LCD model no. NV156FHM-N3D demonstrates this:

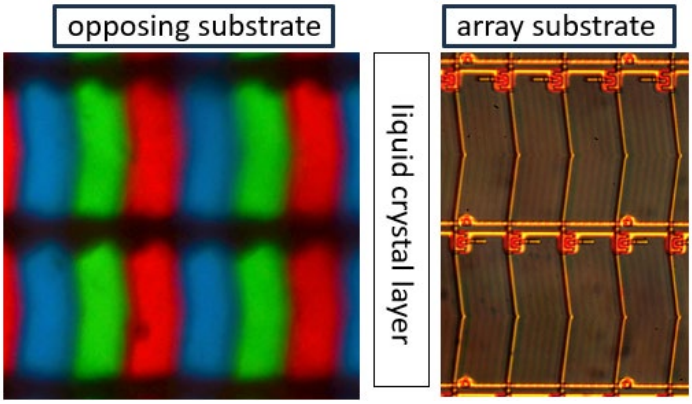

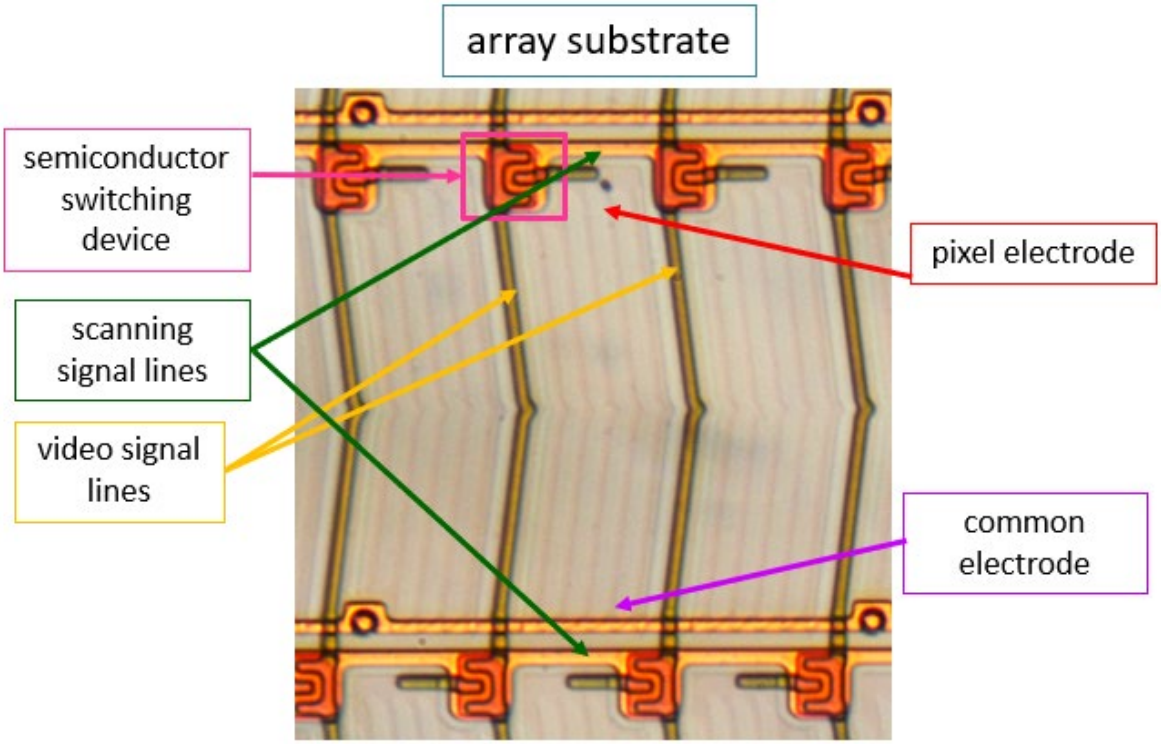

46. The products accused of infringing the ’347 patent comprise a reflecting face formed below the liquid crystal panel, wherein a light reflected on the reflecting face is transmitted through the liquid crystal panel. The configuration of the products accused of infringing the ’347 patent is such that light reflected on the reflecting face is transmitted through the liquid crystal

panel (the reflecting face is beneath the diffuser in the below illustration). For example, an examination of BOE's LCM/LCD model no. NV156FHM-N3D, demonstrates this:

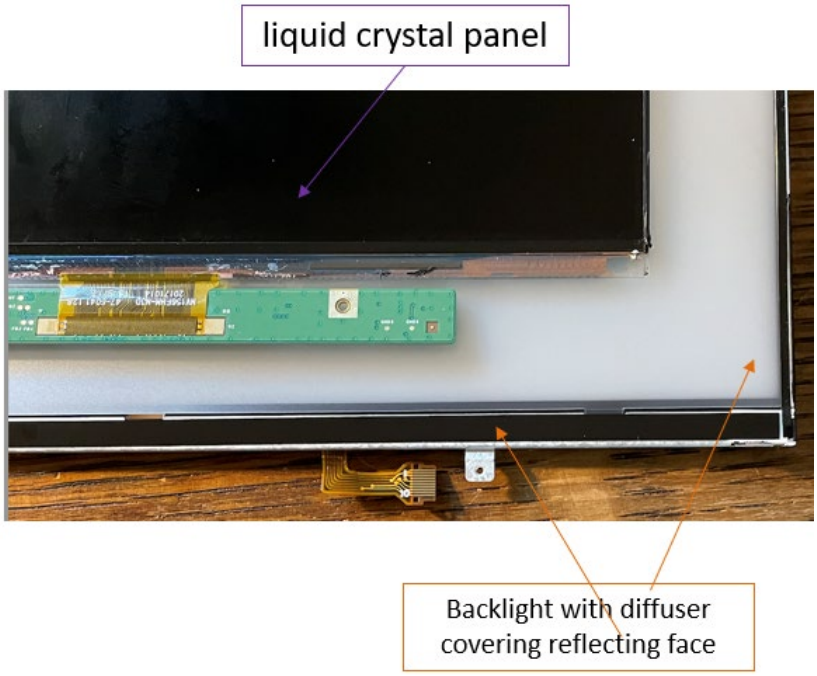

47. The products accused of infringing the '347 patent are configured such that at least one electrode of the common electrode and the pixel electrode is constituted by an electrode portion and a wiring portion. For example, the pixel electrode is constituted by an electrode portion and a wiring portion. For example, an examination of BOE's LCM/LCD model no. NV156FHM-N3D demonstrates this:

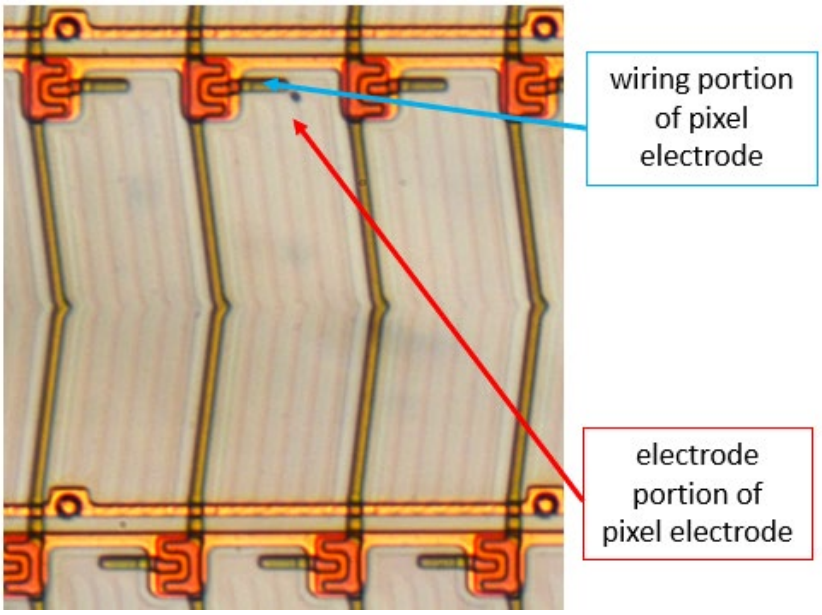

48. The products accused of infringing the ’347 patent are configured such that the electrode portion is at least partially constituted by a transparent electric conductor. For example, the pixel electrode portion is at least partially constituted by a transparent electric conductor. For example, an examination of BOE’s LCM/LCD model no. NV156FHM-N3D demonstrates this:

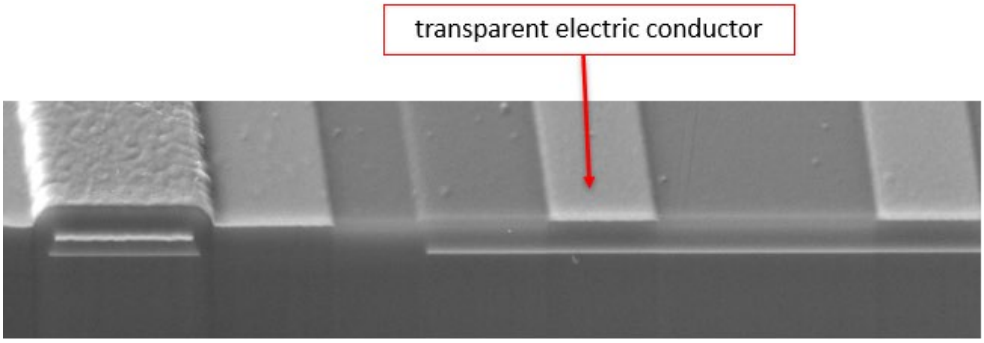

49. The products accused of infringing the ’347 patent are configured such that the pixel electrode portion is formed in a layer separated by an insulating layer from a layer in which the scanning signal line is formed, and the pixel wiring portion is formed in the layer in which the

scanning signal line is formed. For example, an examination of BOE's LCM/LCD model no. NV156FHM-N3D demonstrates this:

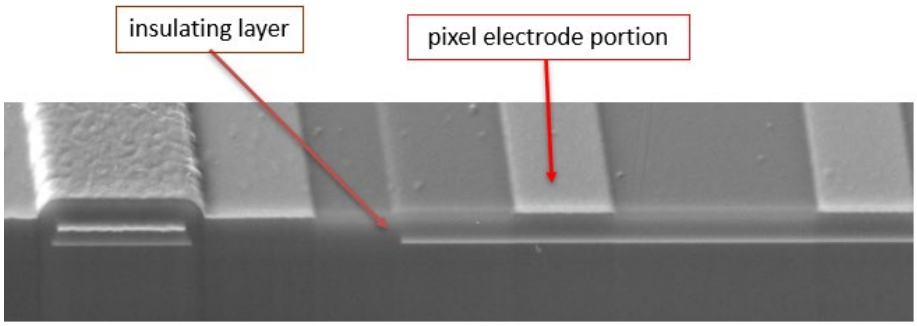

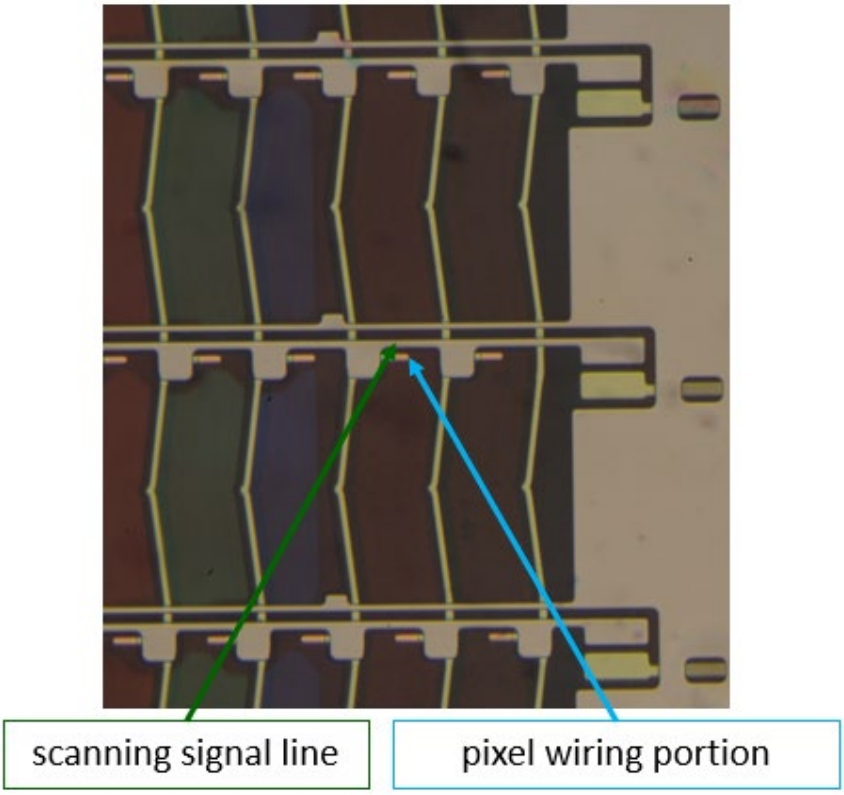

50. At a minimum, BOE has known about the '347 patent since at least July 29, 2020, when BOE received notice of their infringement. Further, on information and belief, BOE's conduct before the United States Patent and Trademark Office ("USPTO") and foreign offices,

suggest that it was aware of the ’347 patent prior to receiving any letters. For example, in prosecuting U.S. Patent Publication No. 20170090244A1, BOE has known of the ’347 patent.

INDIRECT INFRINGEMENT (35 U.S.C. §271(b))

51. On information and belief, since at least the above-mentioned dates when Defendant was on notice of its infringement, Defendant actively induced, under U.S.C. § 271(b), distributors, retailers, customers, subsidiaries, importers, testing outfits, and/or consumers to directly infringe one or more claims of the ’347 patent by making, using, offering for sale, selling, and/or importing the Accused Products. Since at least the notice provided on the above-mentioned dates, Defendant did so with knowledge, or with willful blindness of the fact, that the induced acts constitute infringement of the ’347 patent. Defendant has caused and/or intended to cause, and took affirmative steps to induce infringement by distributors, retailers, customers, subsidiaries, importers, testing outfits, and/or consumers by at least, inter alia, creating advertisements that promote the infringing use of the Accused Products, creating and/or maintaining established distribution channels for the Accused Products into and within the United States, manufacturing the Accused Products in conformity with U.S. laws and regulations, distributing or making available instructions or manuals for these products to purchasers and prospective buyers, testing and certifying features related to infringing features in the Accused Products, and/or providing technical support, replacement parts, or services for these products to these purchasers in the United States. As just one example, Defendant actively induced distributors, retailers, customers, subsidiaries, importers, testing outfits, and/or consumers that have purchased, imported, used, offered for sale, and/or sold Accused Products in the U.S. by marking the Accused Products with UL Solutions labels indicating compliance with U.S. laws and regulations for the Accused Products destined and intended to be sold in the U.S. https://marks.ul.com/about/ul-listing-and-

classification-marks/appearance-and-significance/marks-for-north-america/. In another example, Defendant actively induced distributors, retailers, customers, subsidiaries, importers, testing outfits, and/or consumers that have purchased, imported, used, offered for sale, and/or sold to include the accused Defendant's TFT-LCDs and/or LCMs that already comply with U.S. laws and regulations via UL Solutions in accused end products (e.g., TVs, monitors, laptops, tablets, mobile phones) because it allows for such entities to streamline the UL Solutions certification process for such end products if the Defendant's TFT-LCD and/or LCMs have already been certified by UL Solutions. https://marks.ul.com/about/ul-listing-and-classification-marks/appearance-and-significance/marks-for-north-america/. Defendant specifically designs, develops, manufactures, sells, supplies its accused TFT-LCDs and/or LCMs for application in other display products (e.g., TVs, laptops, monitors, tables, and/or mobile phones), including by obtaining UL Solutions certificates for compliance with U.S. laws and regulations, where Defendant induces its customers (e.g., Acer, Asus, Dell, HP, and Lenovo) to offer for sale, sell, import, and/or use the accused display products incorporating Defendant's infringing TFT-LCDs/LCMs in the United States and this District. Defendant undertakes these activities with knowledge or at least willful blindness to the significant sales of the accused products including Defendant's TFT-LCDs/LCMs in the United States and in this District.

52. On information and belief, despite having knowledge of the '347 patent and its infringement, Defendant specifically intended for others to import and sell products accused of infringing the '347 patent. For example, Defendant specifically intended for its U.S.-based (and/or foreign-based) subsidiaries or customers to import and sell products accused of infringing the '347 patent. On information and belief, Defendant instructed and encouraged the importers or customers to import and/or sell products accused of infringing the '347 patent. On information and belief, the

purchase and sale agreements between Defendant and the importers or customers provide such instruction and/or encouragement. Further, on information and belief, Defendant's U.S.-based (and/or foreign-based) subsidiaries, affiliates, employees, agents, and/or related companies existed for inter alia, the purpose of importing and selling products accused of infringing the '347 patent in the United States.

53. Upon information and belief, despite having knowledge of the '347 patent and knowledge that each was directly and/or indirectly infringing one or more claims of the '347 patent, Defendant nevertheless continued its infringing conduct and disregarded an objectively high likelihood of infringement. Defendant's infringing activities relative to the '347 patent have been willful, wanton, malicious, in bad-faith, deliberate, consciously wrongful, flagrant, and an egregious case of misconduct beyond typical infringement such that Plaintiff is entitled under 35 U.S.C. § 284 to enhanced damages up to three times the amount found or assessed.

54. Plaintiff has been damaged as a result of Defendant's infringing conduct described in this Count. Defendant is, thus, liable to Plaintiff in an amount that adequately compensates Plaintiff for Defendant's infringements, which, by law, cannot be less than a reasonable royalty, together with interest and costs as fixed by this Court under 35 U.S.C. § 284.

55. Plaintiff has complied with the requirements of 35 U.S.C. § 287, to the extent necessary and/or applicable, and is entitled to collect pre- and post-filing damages for Defendant's infringements of the '347 patent.

COUNT II
(Infringement of U.S. Patent No. 7,414,682)

56. Plaintiff incorporates paragraphs 1 through 55 herein by reference.

57. This cause of action arises under the patent laws of the United States, and in particular, 35 U.S.C. §§ 271, *et seq*.

58. Plaintiff is the owner of the ’682 patent with all substantial rights to the ’682 patent including the exclusive right to enforce, sue, and recover damages for past infringement.

59. The ’682 patent is valid, enforceable and was duly issued in full compliance with Title 35 of the United States Code.

DIRECT INFRINGEMENT (35 U.S.C. §271(a))

60. Defendant has infringed literally, and/or under the Doctrine of Equivalents, one or more claims of the ’682 patent in this District and elsewhere in Texas and the United States.

61. Defendant directly infringed the ’682 patent via 35 U.S.C. § 271(a) by having made, offered for sale, sold, used, tested, and/or imported those Accused Products, their components and processes, and/or products containing the same that incorporate the fundamental technologies and claims of the ’682 patent. For example, Defendant, either by itself and/or via an agent, directly infringed the ’682 patent by offering for sale, selling, and/or importing those Accused Products, their components and processes, and/or products containing the same that incorporate the fundamental technologies and claims of the ’682 patent, to and/or via its alter egos, agents, intermediaries, distributors, importers, customers, subsidiaries, and/or consumers. Furthermore, on information and belief, Defendant sold and made some Accused Products outside of the United States, delivered those products to its customers, agents, distributors, and/or subsidiaries in the United States, or in the case that it delivered the Accused Products outside of the United States it did so intending and/or knowing that those products were destined for the United States and/or designed those products for sale in the United States, thereby directly infringing the ’682 patent. *See, e.g., Lake Cherokee Hard Drive Techs., L.L.C. v. Marvell Semiconductor, Inc.*, 964 F. Supp. 2d 653, 658 (E.D. Tex. 2013). Furthermore, BOE directly infringed the ’682 patent through its direct involvement in the activities of its subsidiaries, including BOEUSA, including by selling

and offering for sale the Accused Products directly to such subsidiaries and importing the Accused Products into the United States for such subsidiaries. Such subsidiaries conduct activities that constitute direct infringement of the ’682 patent under 35 U.S.C. § 271(a) by having made, used, tested, offered for sale, sold, and/or imported those Accused Products. On information and belief, BOE offered for sale, sold, and imported the Accused Products within the U.S. to, for example, its distributors, customers, subsidiaries, importers, and/or consumers. Further, BOE is vicariously liable for this infringing conduct of its U.S.-based subsidiaries, e.g., BOEUSA, (under both the alter ego and agency theories) because, as an example and on information and belief, BOE and its subsidiaries are essentially the same company, and BOE has the right and ability to control its subsidiaries infringing acts and receives a direct financial benefit from the infringement of its U.S.-based subsidiaries, e.g., BOEUSA.

62. Defendant infringed claim 7 of the ’682 patent. The products accused of infringing the ’682 patent comprise a liquid crystal display of transversal electric field type. For example, Dell’s laptop model no. P89F includes BOE’s LCM/LCD model no. NV156FHM-N3D, such that each comprises a liquid crystal display of transversal electric field type:

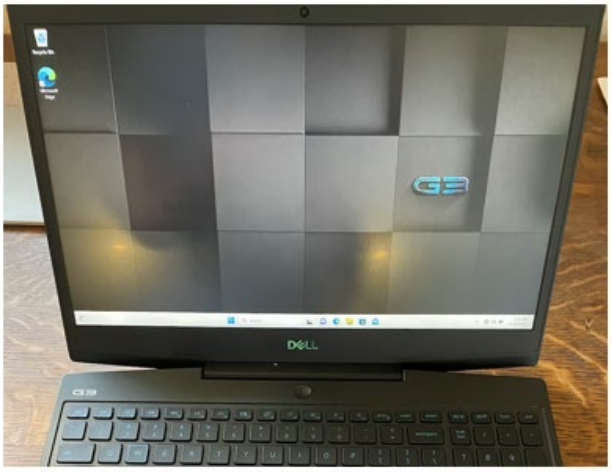

63. The products accused of infringing the ’682 patent comprise a liquid crystal panel in which liquid crystal is retained between a pair of substrates. For example, an examination of BOE’s LCM/LCD model no. NV156FHM-N3D demonstrates this:

liquid crystal panel

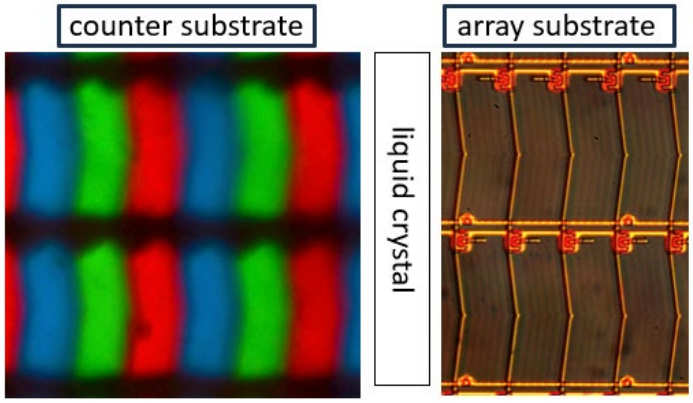

64. The products accused of infringing the ’682 patent comprise a plurality of scanning signal lines and a plurality of video signal lines formed so as to define a plurality of pixels in a matrix on an inner surface of one of the pair of substrates. For example, an examination of BOE’s LCM/LCD model no. NV156FHM-N3D demonstrates this:

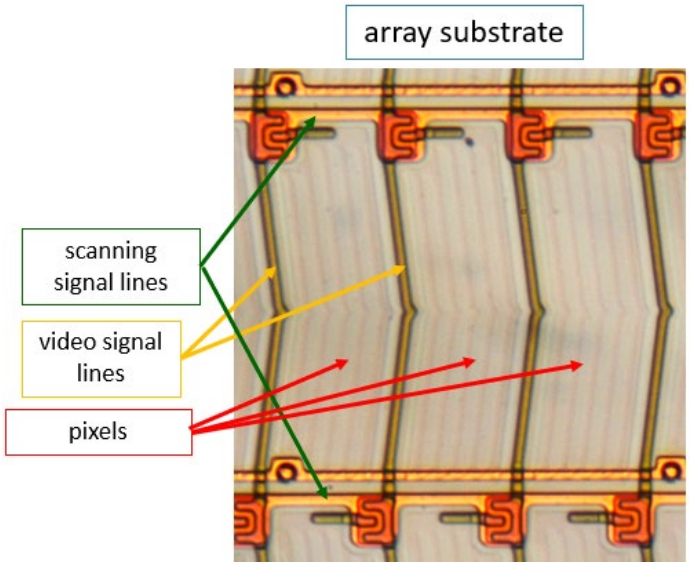

65. The products accused of infringing the ’682 patent comprise a pixel electrode and a common electrode formed opposite to each other in each pixel in a plan view. For example, an examination of BOE’s LCM/LCD model no. NV156FHM-N3D demonstrates this:

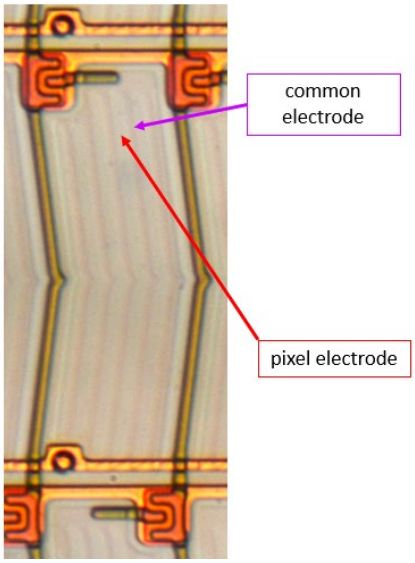

66. The products accused of infringing the ’682 patent are configured such that an image is displayed on the liquid crystal panel by inputting a video signal from the video signal line into the pixel electrode while sequentially selecting the pixel through the scanning signal line. For example, an examination of BOE’s LCM/LCD model no. NV156FHM-N3D demonstrates this:

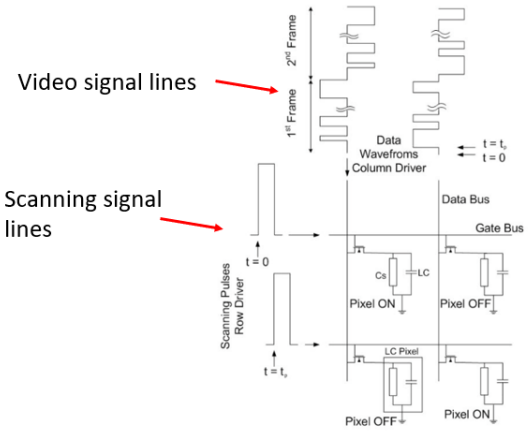

https://www.intechopen.com/books/new-developments-in-liquid-crystals/active-matrix-liquid-crystal-displays-operation-electronics-and-analog-circuits-design

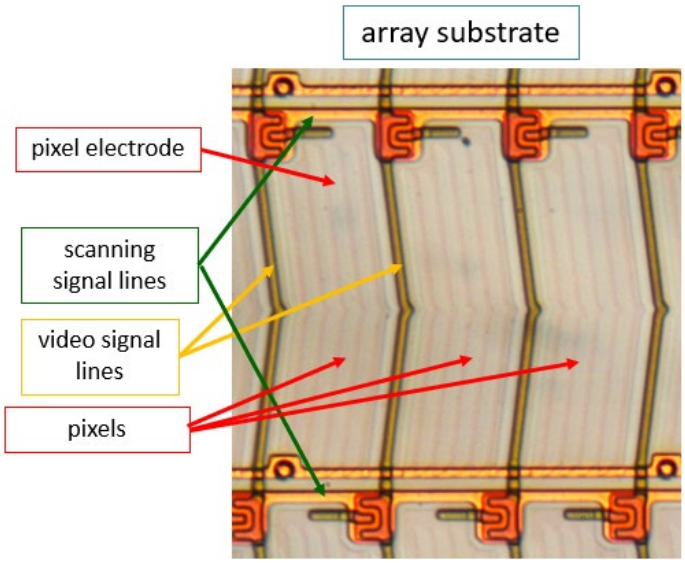

67. The products accused of infringing the ’682 patent are configured such that at least one of the scanning signal lines, the video signal lines, the pixel electrode, or the common electrode is at least partially constituted by a light-transmitting conductive layer and a light-non-transmitting conductive layer. For example, an examination of BOE’s LCM/LCD model no. NV156FHM-N3D demonstrates that the pixel electrode is at least partially constituted by a light-transmitting conductive layer and a light-non-transmitting conductive layer:

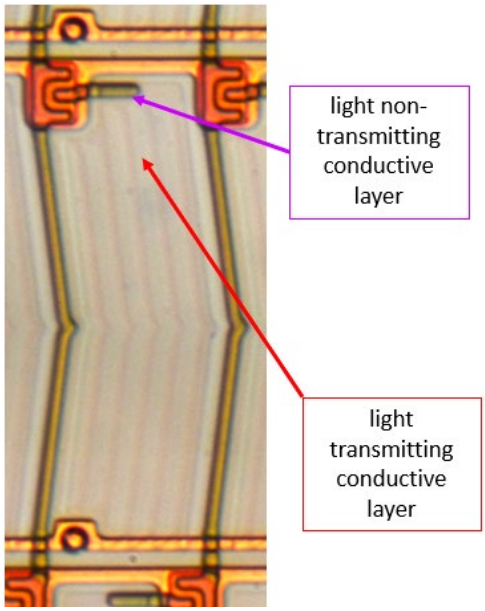

68. The products accused of infringing the ’682 patent are configured such that a width of the light-transmitting conductive layer is wider than a width of the light-non-transmitting layer. For example, an examination of BOE’s LCM/LCD model no. NV156FHM-N3D demonstrates this:

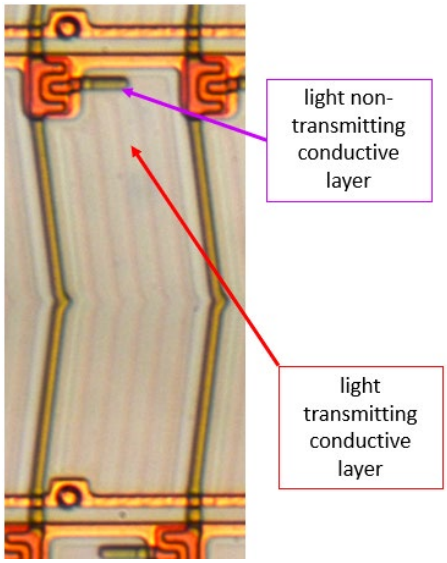

69. At a minimum, BOE has known about the ’682 patent since at least July 29, 2020, when BOE received notice of their infringement. Further, on information and belief, BOE’s conduct before the USPTO and foreign offices, suggest that it was aware of the ’682 patent prior to receiving any letters. For example, in prosecuting U.S. Patent Publication No. 20170090244A1, BOE has known of the ’682 patent.

INDIRECT INFRINGEMENT (35 U.S.C. §271(b))

70. On information and belief, since at least the above-mentioned dates when Defendant was on notice of its infringement, Defendant actively induced, under U.S.C. § 271(b), distributors, retailers, customers, subsidiaries, importers, testing outfits, and/or consumers to directly infringe one or more claims of the ’682 patent by making, using, offering for sale, selling, and/or importing the Accused Products. Since at least the notice provided on the above-mentioned dates, Defendant did so with knowledge, or with willful blindness of the fact, that the induced acts constitute infringement of the ’682 patent. Defendant has caused and/or intended to cause, and took affirmative steps to induce infringement by distributors, retailers, customers, subsidiaries, importers, testing outfits, and/or consumers by at least, inter alia, creating advertisements that promote the infringing use of the Accused Products, creating and/or maintaining established distribution channels for the Accused Products into and within the United States, manufacturing the Accused Products in conformity with U.S. laws and regulations, distributing or making available instructions or manuals for these products to purchasers and prospective buyers, testing and certifying features related to infringing features in the Accused Products, and/or providing technical support, replacement parts, or services for these products to these purchasers in the United States. As just one example, Defendant actively induced distributors, retailers, customers, subsidiaries, importers, testing outfits, and/or consumers that have purchased, imported, used,

offered for sale, and/or sold Accused Products in the U.S. by marking the Accused Products with UL Solutions labels indicating compliance with U.S. laws and regulations for the Accused Products destined and intended to be sold in the U.S. https://marks.ul.com/about/ul-listing-and-classification-marks/appearance-and-significance/marks-for-north-america/. In another example, Defendant actively induced distributors, retailers, customers, subsidiaries, importers, testing outfits, and/or consumers that have purchased, imported, used, offered for sale, and/or sold to include the accused Defendant's TFT-LCDs and/or LCMs that already comply with U.S. laws and regulations via UL Solutions in accused end products (e.g., TVs, monitors, laptops, tablets, mobile phones) because it allows for such entities to streamline the UL Solutions certification process for such end products if the Defendant's TFT-LCD and/or LCMs have already been certified by UL Solutions. https://marks.ul.com/about/ul-listing-and-classification-marks/appearance-and-significance/marks-for-north-america/. Defendant specifically designs, develops, manufactures, sells, supplies its accused TFT-LCDs and/or LCMs for application in other display products (e.g., TVs, laptops, monitors, tables, and/or mobile phones), including by obtaining UL Solutions certificates for compliance with U.S. laws and regulations, where Defendant induces its customers (e.g., Acer, Asus, Dell, HP, and Lenovo) to offer for sale, sell, import, and/or use the accused display products incorporating Defendant's infringing TFT-LCDs/LCMs in the United States and this District. Defendant undertakes these activities with knowledge or at least willful blindness to the significant sales of the accused products including Defendant's TFT-LCDs/LCMs in the United States and in this District.

71. On information and belief, despite having knowledge of the '682 patent and its infringement, Defendant specifically intended for others to import and sell products accused of infringing the '682 patent. For example, Defendant specifically intended for its U.S.-based

subsidiaries or customers to import and sell products accused of infringing the ’682 patent. On information and belief, Defendant instructed and encouraged the importers or customers to import and/or sell products accused of infringing the ’682 patent. On information and belief, the purchase and sale agreements between Defendant and the importers or customers provide such instruction and/or encouragement. Further, on information and belief, Defendant’s U.S.-based (and/or foreign-based) subsidiaries, affiliates, employees, agents, and/or related companies existed for inter alia, the purpose of importing and selling products accused of infringing the ’682 patent in the United States.

72. Upon information and belief, despite having knowledge of the ’682 patent and knowledge that each was directly and/or indirectly infringing one or more claims of the ’682 patent, Defendant nevertheless continued their infringing conduct and disregarded an objectively high likelihood of infringement. Defendant’s infringing activities relative to the ’682 patent have been willful, wanton, malicious, in bad-faith, deliberate, consciously wrongful, flagrant, and an egregious case of misconduct beyond typical infringement such that Plaintiff is entitled under 35 U.S.C. § 284 to enhanced damages up to three times the amount found or assessed.

73. Plaintiff has been damaged as a result of Defendant’s infringing conduct described in this Count. Defendant is, thus, liable to Plaintiff in an amount that adequately compensates Plaintiff for Defendant’s infringements, which, by law, cannot be less than a reasonable royalty, together with interest and costs as fixed by this Court under 35 U.S.C. § 284.

74. Plaintiff has complied with the requirements of 35 U.S.C. § 287, to the extent necessary and/or applicable, and is entitled to collect pre- and post-filing damages for Defendant’s infringements of the ’682 patent.

COUNT III
(Infringement of U.S. Patent No. 7,995,047)

75. Plaintiff incorporates paragraphs 1 through 74herein by reference.

76. This cause of action arises under the patent laws of the United States, and in particular, 35 U.S.C. §§ 271, *et seq*.

77. Plaintiff is the owner of the ’047 patent with all substantial rights to the ’047 patent including the exclusive right to enforce, sue, and recover damages for past and future infringement.

78. The ’047 patent is valid, enforceable and was duly issued in full compliance with Title 35 of the United States Code.

DIRECT INFRINGEMENT (35 U.S.C. §271(a))

79. On information and belief, BOE has infringed and continues to infringe literally, and/or under the Doctrine of Equivalents, one or more claims of the ’047 patent in this District and elsewhere in Texas and the United States.

80. BOE directly infringes the ’047 patent via 35 U.S.C. § 271(a) by making, offering for sale, using, testing, selling, and/or importing those Accused Products, their components and processes, and/or products containing the same that incorporate the fundamental technologies covered by the ’047 patent. For example, BOE directly infringes the ’047 patent by offering for sale, selling, and/or importing those Accused Products, their components and processes, and/or products containing the same that incorporate the fundamental technologies covered by the ’047 patent, to its alter egos, agents, intermediaries, distributors, importers, customers, subsidiaries, and/or consumers. Furthermore, on information and belief, BOE sells and makes the Accused Products outside of the United States, delivers those products to its customers, distributors, and/or subsidiaries in the United States, or in the case that it delivers the Accused Products outside of the United States it does so intending and/or knowing that those products are destined for the United

States and/or designing those products for sale in the United States, thereby directly infringing the ’047 patent. *See, e.g., Lake Cherokee Hard Drive Techs., L.L.C. v. Marvell Semiconductor, Inc.*, 964 F. Supp. 2d 653, 658 (E.D. Tex. 2013). Furthermore, BOE directly infringes the ’047 patent through its direct involvement in the activities of its subsidiaries, including BOEUSA, including by selling and offering for sale the Accused Products directly to such subsidiaries and importing the Accused Products into the United States for such subsidiaries. Such subsidiaries conduct activities that constitute direct infringement of the ’047 patent under 35 U.S.C. § 271(a) by making, using, testing, offering for sale, selling, and/or importing those Accused Products. On information and belief, BOE offers for sale, sells, and imports the Accused Products within the U.S. to, for example, its distributors, customers, subsidiaries, importers, and/or consumers. Further, BOE is vicariously liable for this infringing conduct of its U.S.-based subsidiaries, e.g., BOEUSA, (under both the alter ego and agency theories) because, as an example and on information and belief, BOE and its subsidiaries are essentially the same company, and BOE has the right and ability to control its subsidiaries infringing acts and receives a direct financial benefit from the infringement of its U.S.-based subsidiaries, e.g., BOEUSA.

81. For example, BOE infringe claim 1 of the ’047 patent. The products accused of infringing the ’047 patent comprise a current driving device. For example, the Acer Swift 3 laptop includes BOE’s LCM model no. NE135FBM-N41, which includes a power supply board, such that each comprises a current driving device:

back of BOE LCM

Acer Swift 3 laptop

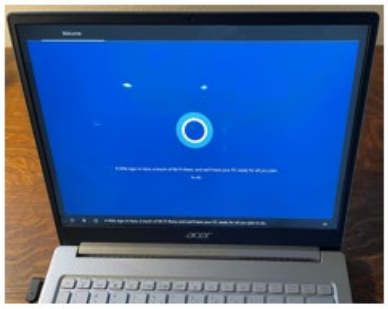

BOE LCM with cover removed

82. The products accused of infringing the ’047 patent comprise a first voltage supply source for supplying a first voltage. An examination of the power supply board included in the BOE LCM model no. NE135FBM-N41 demonstrates this:

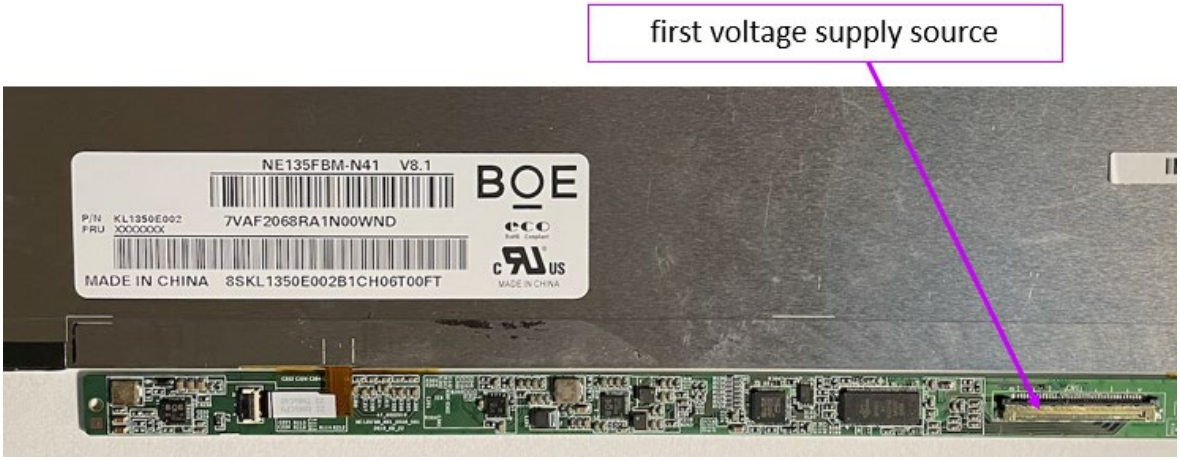

83. The products accused of infringing the ’047 patent comprise a first current supply source for supplying a first electric current. An examination of the power supply board included in the BOE LCM model no. NE135FBM-N41 demonstrates this:

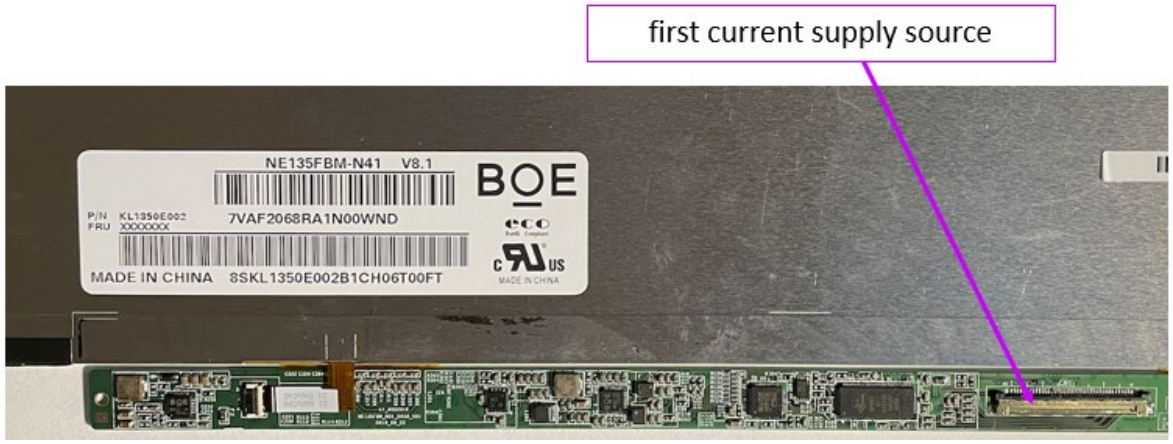

84. The products accused of infringing the ’047 patent comprise a plurality of output terminals. An examination of the power supply board included in the BOE LCM model no. NE135FBM-N41 demonstrates this:

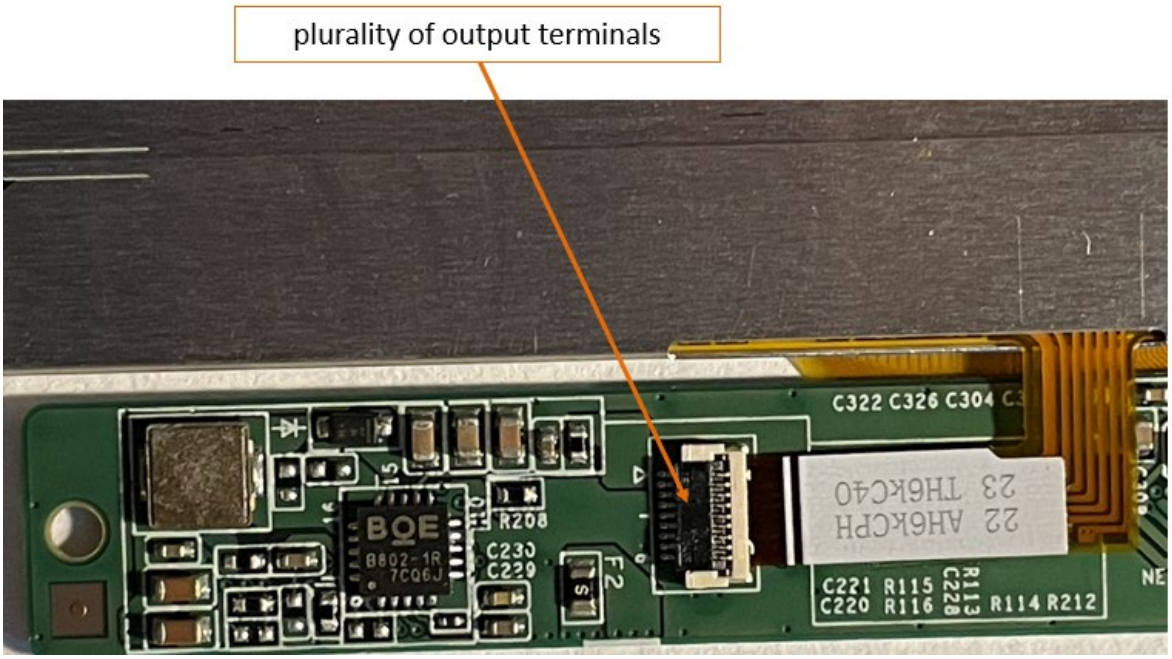

85. The products accused of infringing the ’047 patent comprise a plurality of current output circuits for outputting an electric current in accordance with said first electric current, each of said current output circuits comprising a current-voltage converting circuit, a voltage-current

converting circuit, a voltage holding circuit having a terminal being connected to a reference voltage different from the first voltage, and at least one current output terminal. An examination of the power supply board comprising a BOE B802-1R chipset included in the BOE LCM model no. NE135FBM-N41 demonstrates the presence of a plurality of current output circuits for outputting an electric current in accordance with said first electric current:

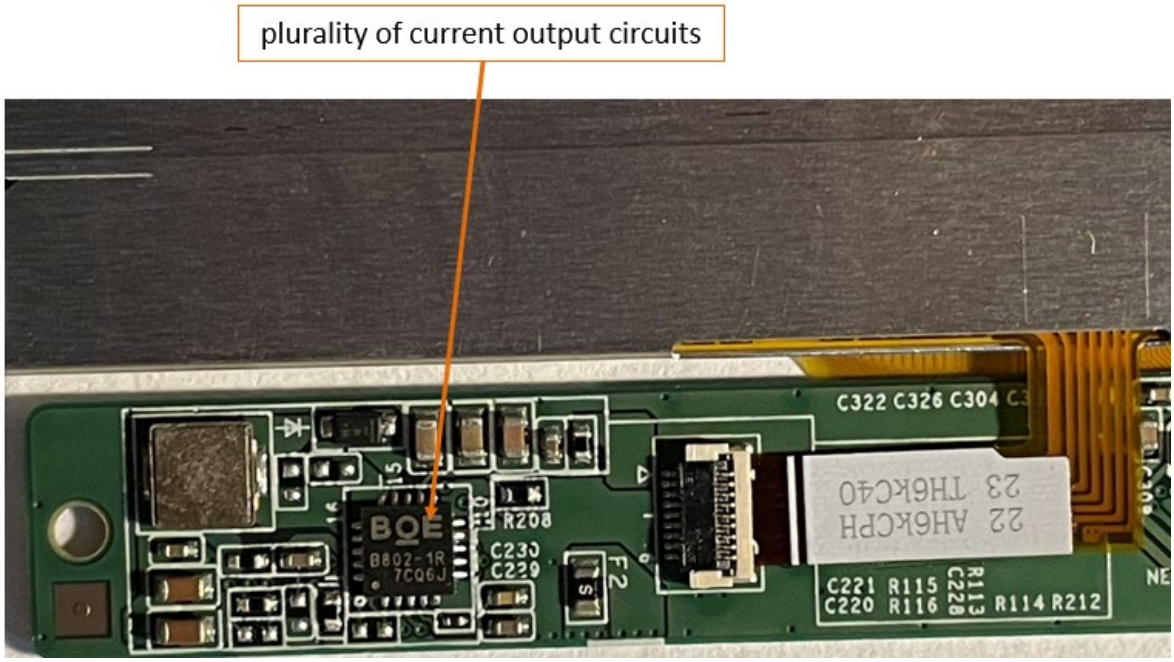

86. The products accused of infringing the ’047 patent are configured such that each of the current output circuits comprise a current-voltage converting circuit and a voltage-current converting circuit. On information and belief, the BOE B802-1R chipset included in the BOE LCM model no. NE135FBM-N41 is configured such that each of the current output circuits comprise a current-voltage converting circuit and a voltage-current converting circuit. No publicly available information exists on the BOE B802-1R chipset. On information and belief, the BOE B802-1R chipset is configured to perform the same functionality as the MP3378 chipset. The BOE 802-1R and MP3378 chipsets each drive a plurality of channels of LEDs of the backlight of an LCM, such

that each of the BOE B802-1R and the MP3378 chipsets are configured such that each of the current output circuits comprise a current-voltage converting circuit and a voltage-current converting circuit:

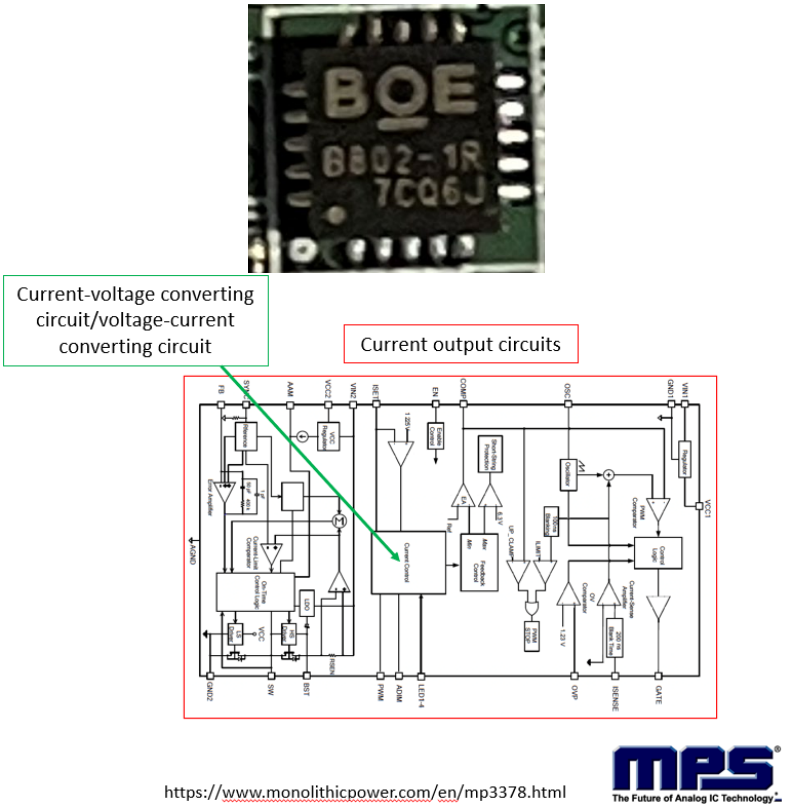

87. The products accused of infringing the ’047 patent are configured such that each of the current output circuits comprise a voltage holding circuit having a terminal being connected to a reference voltage different from the first voltage, and at least one current output terminal. On information and belief, the BOE B802-1R chipset included in the BOE LCM model no. NE135FBM-N41 is configured such that each of the current output circuits comprise a voltage holding circuit having a terminal being connected to a reference voltage different from the first voltage, and at least one current output terminal. No publicly available information exists on the BOE B802-1R chipset. On information and belief, the BOE B802-1R chipset is configured to perform the same functionality as the MP3378 chipset. The BOE 802-1R and MP3378 chipsets

each drive a plurality of channels of LEDs of the backlight of an LCM, such that each of the BOE B802-1R and the MP3378 chipsets are configured such that each of the current output circuits comprise a voltage holding circuit having a terminal being connected to a reference voltage different from the first voltage, and at least one current output terminal:

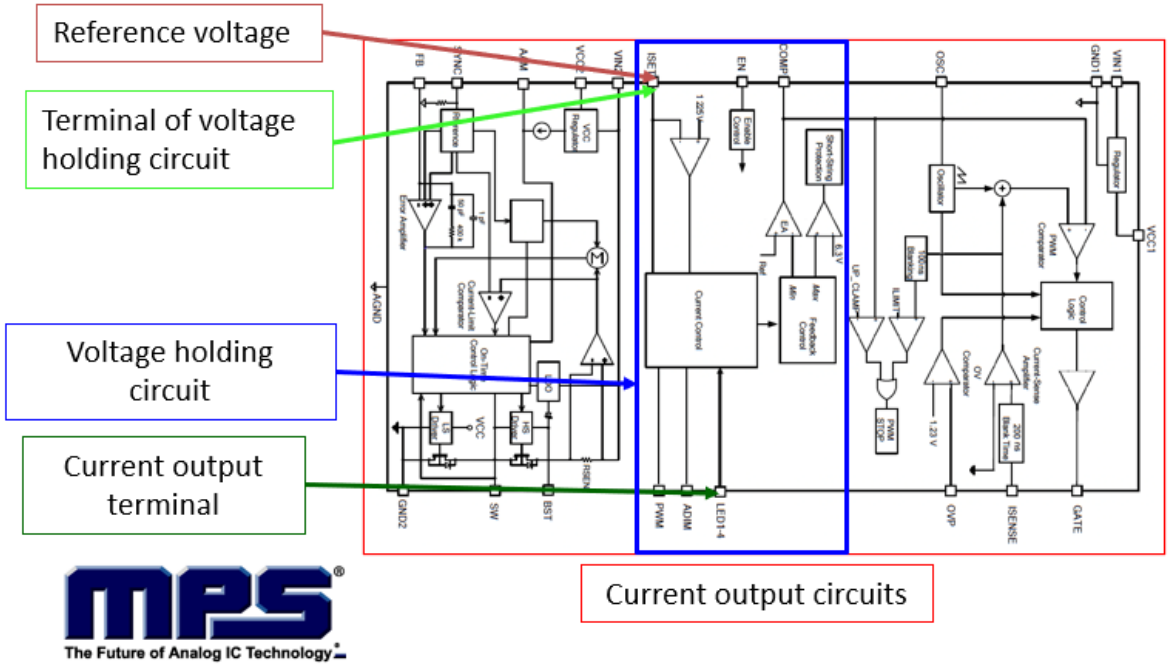

https://www.monolithicpower.com/en/mp3378.html

88. The products accused of infringing the '047 patent are configured such that each of said current output circuits operates in three operation modes including a voltage supply mode, a current supply mode, and a current output mode. On information and belief, the BOE B802-1R chipset included in the BOE LCM model no. NE135FBM-N41 is configured such that each of the

circuits operate in three operation modes, including a voltage supply mode, a current supply mode, and a current output mode. No publicly available information exists on the BOE B802-1R chipset. On information and belief, the BOE B802-1R chipset is configured to perform the same functionality as the MP3378 chipset. The BOE 802-1R and MP3378 chipsets each drive a plurality of channels of LEDs of the backlight of an LCM, such that each of the BOE B802-1R and the MP3378 chipsets (as demonstrated above and below) are configured such that each of the circuits operate in three operation modes, including a voltage supply mode, a current supply mode, and a current output mode:

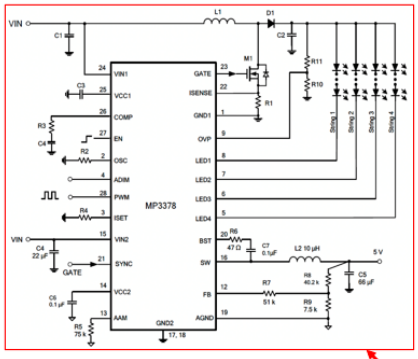

The WLED controller employs a programmable constant frequency, peak-current–mode, step-up converter with 4 channel regulated current sources to drive an array of up to 4 strings of white LEDs.

Internal 6 V Regulator

When VIN1 is greater than 6.5 V, VCC1 outputs a 6 V power supply to the external MOSFET switch gate driver and the internal control circuitry. The VCC1 voltage drops to 0 V when the WLED controller shuts down.

FEATURES

WLED Controller:

- 4-String, Max 350 mA/String WLED Controller
- Up to 24 V Input Voltage Range
- 2.5% Current Matching Accuracy
- Programmable Switching Frequency
- PWM and Analog Dimming Mode

MP3378

24 V, 4-Channel WLED Controller Plus High-Efficiency Buck Converter

https://www.monolithicpower.com/en/mp3378.html

The Future of Analog IC Technology

89. The products accused of infringing the ’047 patent are configured such that under said voltage supply mode, each of said current output circuits receives said first voltage from said first voltage supply source, and the first voltage is supplied to another terminal of said voltage

holding circuit. On information and belief, the BOE B802-1R chipset included in the BOE LCM model no. NE135FBM-N41 is configured such that under said voltage supply mode, each of said current output circuits receives said first voltage from said first voltage supply source, and the first voltage is supplied to another terminal of said voltage holding circuit. No publicly available information exists on the BOE B802-1R chipset. On information and belief, the BOE B802-1R chipset is configured to perform the same functionality as the MP3378 chipset. The BOE 802-1R and MP3378 chipsets each drive a plurality of channels of LEDs of the backlight of an LCM, such that each of the BOE B802-1R and the MP3378 chipsets are configured such that under said voltage supply mode, each of said current output circuits receives said first voltage from said first voltage supply source, and the first voltage is supplied to another terminal of said voltage holding circuit:

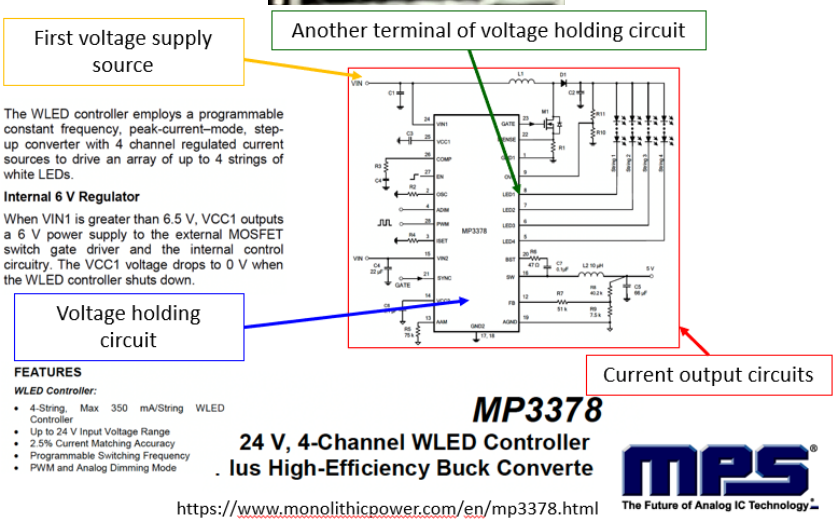

90. The products accused of infringing the ’047 patent are configured such that under said current supply mode, each of said current output circuits receives said first current from said first current supply source, and generates a second voltage by said current-voltage converting circuit, and the first current is supplied to said another terminal of said voltage holding circuit. On information and belief, the BOE B802-1R chipset included in the BOE LCM model no. NE135FBM-N41 is configured such that under said current supply mode, each of said current output circuits receives said first current from said first current supply source, and generates a second voltage by said current-voltage converting circuit, and the first current is supplied to said another terminal of said voltage holding circuit. No publicly available information exists on the BOE B802-1R chipset. On information and belief, the BOE B802-1R chipset is configured to perform the same functionality as the MP3378 chipset. The BOE 802-1R and MP3378 chipsets each drive a plurality of channels of LEDs of the backlight of an LCM, such that each of the BOE B802-1R and the MP3378 chipsets are configured such that under said current supply mode, each of said current output circuits receives said first current from said first current supply source, and generates a second voltage by said current-voltage converting circuit, and the first current is supplied to said another terminal of said voltage holding circuit:

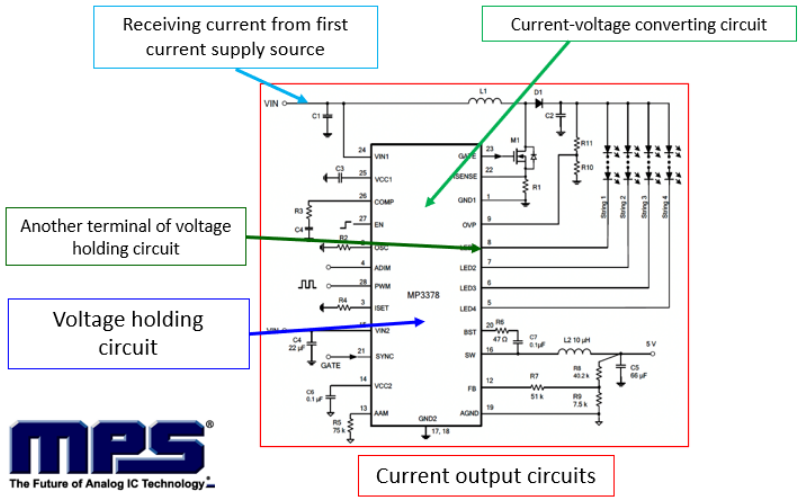

https://www.monolithicpower.com/en/mp3378.html

91. The products accused of infringing the ’047 patent are configured such that under said current output mode, each of said current output circuits outputs an output current according to said voltage held in said voltage holding circuit by said voltage-current converting circuit. On information and belief, the BOE B802-1R chipset included in the BOE LCM model no. NE135FBM-N41 is configured such that under said current output mode, each of said current output circuits outputs an output current according to said voltage held in said voltage holding circuit by said voltage-current converting circuit. No publicly available information exists on the BOE B802-1R chipset. On information and belief, the BOE B802-1R chipset is configured to perform the same functionality as the MP3378 chipset. The BOE 802-1R and MP3378 chipsets each drive a plurality of channels of LEDs of the backlight of an LCM, such that each of the BOE B802-1R and the MP3378 chipsets are configured such that under said current output mode, each of said current output circuits outputs an output current according to said voltage held in said voltage holding circuit by said voltage-current converting circuit:

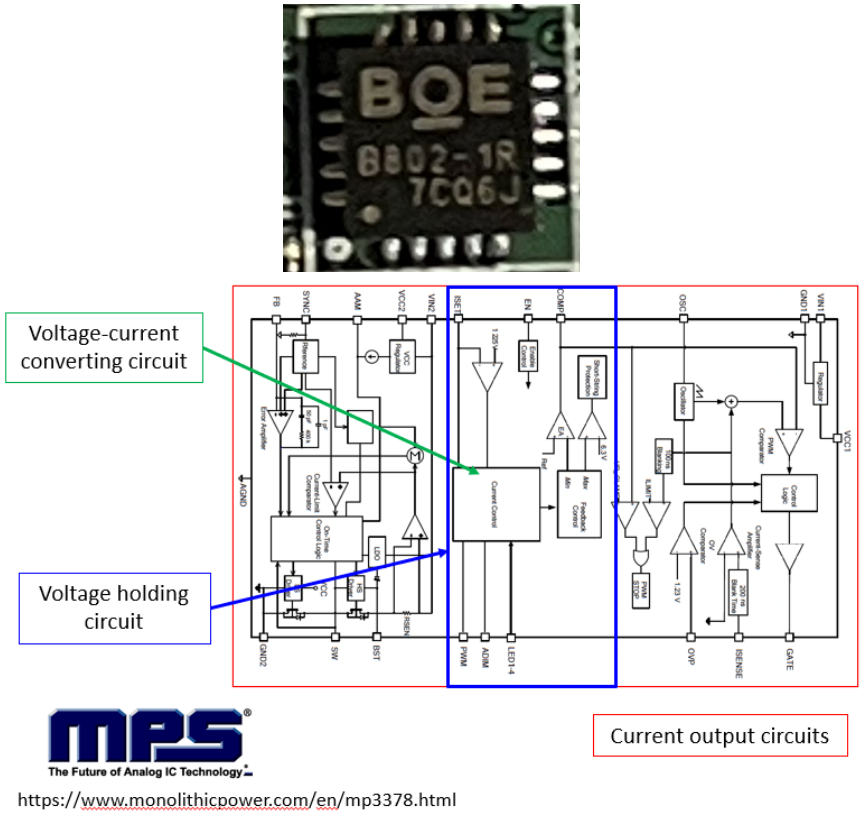

92. At a minimum, BOE has known about the ’047 patent since at least as early as the service date of this Original Complaint. Additionally, BOE has known about the ’047 patent since at least July 29, 2020, when BOE received notice of its infringement.

INDIRECT INFRINGEMENT (35 U.S.C. §271(b))

93. On information and belief, since at least the above-mentioned dates when BOE was on notice of its infringement, BOE has actively induced, under U.S.C. § 271(b), its distributors, customers, subsidiaries, importers, testing outfits, and/or consumers to directly infringe one or more claims of the ’047 patent to use, offer for sale, sell, use, and/or import the Accused Products. Since at least the notice provided on the above-mentioned dates, BOE does so with knowledge, or with willful blindness of the fact, that the induced acts constitute infringement of the ’047 patent. BOE intends to cause, and has taken affirmative steps to induce infringement by its distributors,

importers, testing outfits, customers, subsidiaries, and/or consumers by at least, inter alia, creating advertisements that promote the infringing use of the Accused Products, creating and/or maintaining established distribution channels for the Accused Products into and within the United States, manufacturing the Accused Products in conformity with U.S. laws and regulations, distributing or making available instructions or manuals for these products to purchasers and prospective buyers, testing and certifying features related to infringing features in the Accused Products, and/or providing technical support, replacement parts, or services for these products to these purchasers in the United States. As just one example, BOE has actively induced distributors, retailers, customers, subsidiaries, importers, testing outfits, and/or consumers that have purchased, imported, used, offered for sale, and/or sold Accused Products in the U.S. by marking its Accused Products with UL Solutions labels indicating compliance with U.S. laws and regulations for the Accused Products destined and intended to be sold in the U.S. https://marks.ul.com/about/ul-listing-and-classification-marks/appearance-and-significance/marks-for-north-america/. In another example, BOE has actively induced distributors, retailers, customers, subsidiaries, importers, testing outfits, and/or consumers that have purchased, imported, used, offered for sale, and/or sold to include the accused power supply boards that already comply with U.S. laws and regulations via UL Solutions in accused end products (e.g., TVs, monitors, laptops, tablets, mobile phones) because it allows for such entities to streamline the UL Solutions certification process for such end products if the components have already been certified by UL Solutions. https://marks.ul.com/about/ul-listing-and-classification-marks/appearance-and-significance/marks-for-north-america/.

94. On information and belief, despite having knowledge of the ’047 patent and its infringement, BOE specifically intended for others to import and sell products accused of

infringing the ’047 patent. For example, BOE specifically intended for its U.S.-based subsidiaries or customers to import and sell products accused of infringing the ’047 patent. On information and belief, Defendant instructs and encourages the importers to import and/or sell products accused of infringing the ’047 patent. On information and belief, the purchase and sale agreements between BOE and the importers provide such instruction and/or encouragement. Further, on information and belief, BOE’s U.S.-based subsidiaries exist for inter alia, the purpose of importing and selling products accused of infringing the ’047 patent in the United States.

95. Upon information and belief, despite having knowledge of the ’047 patent and knowledge that it is directly and/or indirectly infringing one or more claims of the ’047 patent, Defendant has nevertheless continued its infringing conduct and disregarded an objectively high likelihood of infringement. Defendant’s infringing activities relative to the ’047 patent have been, and continue to be, willful, wanton, malicious, in bad-faith, deliberate, consciously wrongful, flagrant, and an egregious case of misconduct beyond typical infringement such that Plaintiff is entitled under 35 U.S.C. § 284 to enhanced damages up to three times the amount found or assessed.

96. Plaintiff has been damaged as a result of Defendant’s infringing conduct described in this Count. Defendant is, thus, liable to Plaintiff in an amount that adequately compensates Plaintiff for Defendant’s infringements, which, by law, cannot be less than a reasonable royalty, together with interest and costs as fixed by this Court under 35 U.S.C. § 284.

97. Plaintiff has complied with the requirements of 35 U.S.C. § 287, to the extent necessary and/or applicable, and is entitled to collect pre- and post-filing damages for Defendant’s infringements of the ’047 patent.

COUNT IV
(Infringement of U.S. Patent No. 8,093,830)

98. Plaintiff incorporates paragraphs 1 through 97 herein by reference.

99. This cause of action arises under the patent laws of the United States, and in particular, 35 U.S.C. §§ 271, *et seq*.

100. Plaintiff is the owner of the ’830 patent with all substantial rights to the ’830 patent including the exclusive right to enforce, sue, and recover damages for past and future infringement.

101. The ’830 patent is valid, enforceable and was duly issued in full compliance with Title 35 of the United States Code.

DIRECT INFRINGEMENT (35 U.S.C. §271(a))

102. On information and belief, BOE has infringed and continues to infringe literally, and/or under the Doctrine of Equivalents, one or more claims of the ’830 patent in this District and elsewhere in Texas and the United States.

103. BOE directly infringes the ’830 patent via 35 U.S.C. § 271(a) by making, offering for sale, using, testing, selling, and/or importing those Accused Products, their components and processes, and/or products containing the same that incorporate the fundamental technologies covered by the ’830 patent. For example, BOE directly infringes the ’830 patent by offering for sale, selling, and/or importing those Accused Products, their components and processes, and/or products containing the same that incorporate the fundamental technologies covered by the ’830 patent, to its alter egos, agents, intermediaries, distributors, importers, customers, subsidiaries, and/or consumers. Furthermore, on information and belief, BOE sells and makes the Accused Products outside of the United States, delivers those products to its customers, distributors, and/or subsidiaries in the United States, or in the case that it delivers the Accused Products outside of the United States it does so intending and/or knowing that those products are destined for the United

States and/or designing those products for sale in the United States, thereby directly infringing the ’830 patent. *See, e.g., Lake Cherokee Hard Drive Techs., L.L.C. v. Marvell Semiconductor, Inc.*, 964 F. Supp. 2d 653, 658 (E.D. Tex. 2013). Furthermore, BOE directly infringes the ’830 patent through its direct involvement in the activities of its subsidiaries, including BOEUSA, including by selling and offering for sale the Accused Products directly to such subsidiaries and importing the Accused Products into the United States for such subsidiaries. Such subsidiaries conduct activities that constitute direct infringement of the ’830 patent under 35 U.S.C. § 271(a) by making, using, testing, offering for sale, selling, and/or importing those Accused Products. On information and belief, BOE offers for sale, sells, and imports the Accused Products within the U.S. to, for example, its distributors, customers, subsidiaries, importers, and/or consumers. Further, BOE is vicariously liable for this infringing conduct of its U.S.-based subsidiaries, e.g., BOEUSA, (under both the alter ego and agency theories) because, as an example and on information and belief, BOE and its subsidiaries are essentially the same company, and BOE has the right and ability to control its subsidiaries infringing acts and receives a direct financial benefit from the infringement of its U.S.-based subsidiaries, e.g., BOEUSA.

104. For example, BOE infringes claim 1 of the ’830 patent. The products accused of infringing the ’830 patent comprise a semiconductor light source driving apparatus. For example, the Acer Swift 3 laptop includes BOE’s LCM model no. NE135FBM-N41, such that each comprise a semiconductor light source driving apparatus:

105. The products accused of infringing the ’830 patent comprise a semiconductor light source that is driven by a current. An examination of the semiconductor light source and the power supply board included in the BOE LCM model no. NE135FBM-N41 demonstrates this:

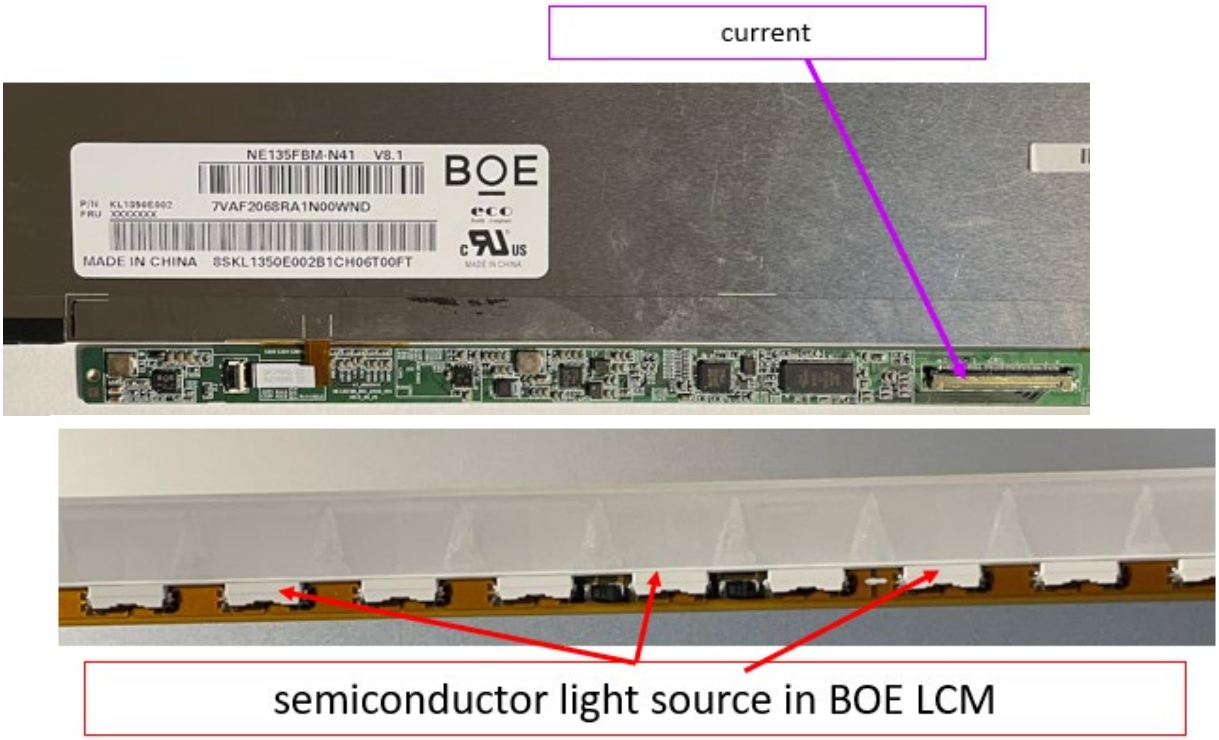

106. The products accused of infringing the ’830 patent comprise a voltage source that drives the semiconductor light source. An examination of the power supply board included in the BOE LCM model no. NE135FBM-N41 demonstrates this:

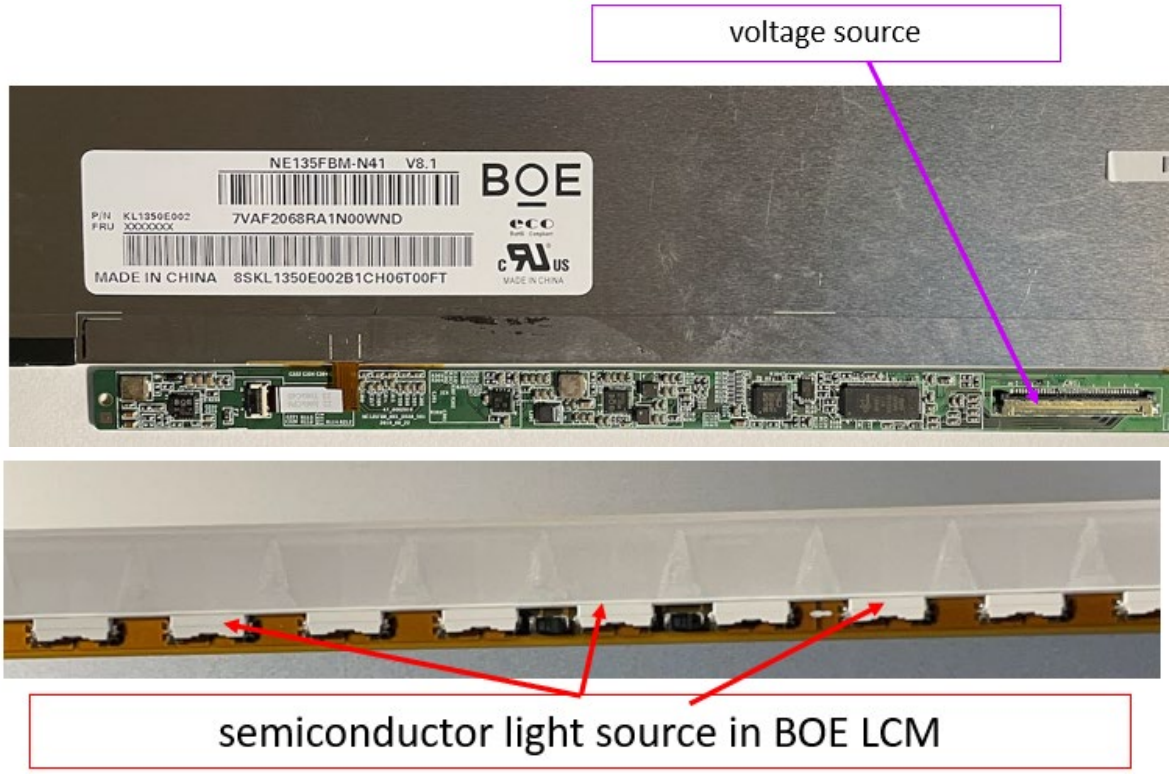

107. The products accused of infringing the '830 patent comprise an output voltage controlling section that controls a drive current value for driving the semiconductor light source by controlling an output voltage of the voltage source. An examination of the power supply board included in the BOE LCM model no. NE135FBM-N41 demonstrates this:

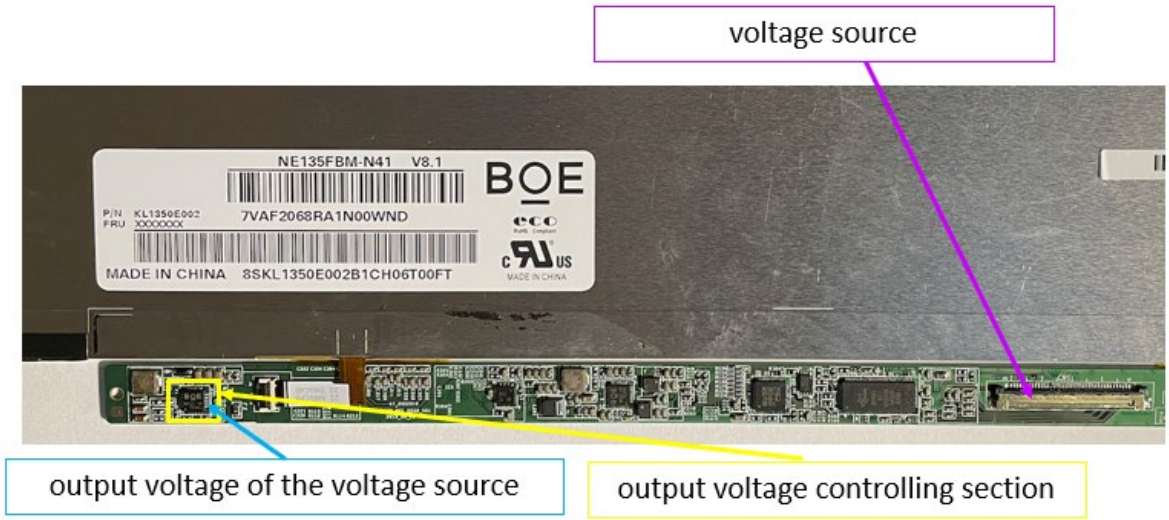

108. The products accused of infringing the ’830 patent comprise an output current detecting section that detects an output current of the semiconductor light source. On information and belief, the BOE B802-1R chipset included in the BOE LCM model no. NE135FBM-N41 is configured such that each comprise an output current detecting section that detects an output current of the semiconductor light source. No publicly available information exists on the BOE B802-1R chipset. On information and belief, the BOE B802-1R chipset is configured to perform the same functionality as the MP3378 chipset. The BOE 802-1R and MP3378 chipsets each drive a plurality of channels of LEDs of the backlight of an LCM, such that each of the BOE B802-1R and the MP3378 chipsets are configured such that each comprise an output current detecting section that detects an output current of the semiconductor light source:

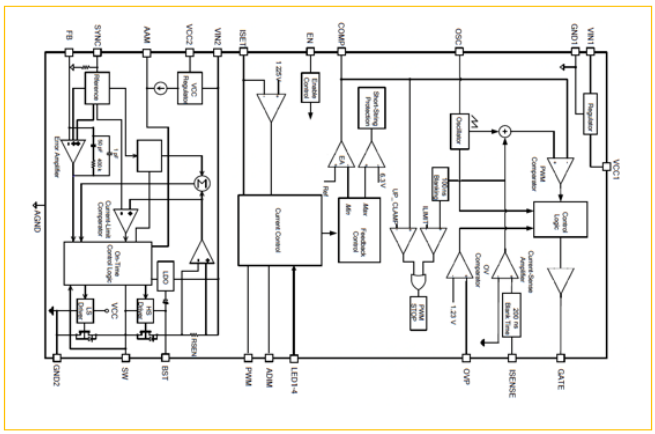

Output current detecting section

https://www.monolithicpower.com/en/mp3378.html

109. The products accused of infringing the ’830 patent comprise a current command section that specifies a reference value of a drive current which is applied to the semiconductor light source. On information and belief, the BOE B802-1R chipset included in the BOE LCM model no. NE135FBM-N41 is configured such that each comprise a current command section that specifies a reference value of a drive current which is applied to the semiconductor light source. No publicly available information exists on the BOE B802-1R chipset. On information and belief, the BOE B802-1R chipset is configured to perform the same functionality as the MP3378 chipset. The BOE 802-1R and MP3378 chipsets each drive a plurality of channels of LEDs of the backlight of an LCM, such that each of the BOE B802-1R and the MP3378 chipsets are configured such that each comprise a current command section that specifies a reference value of a drive current which is applied to the semiconductor light source:

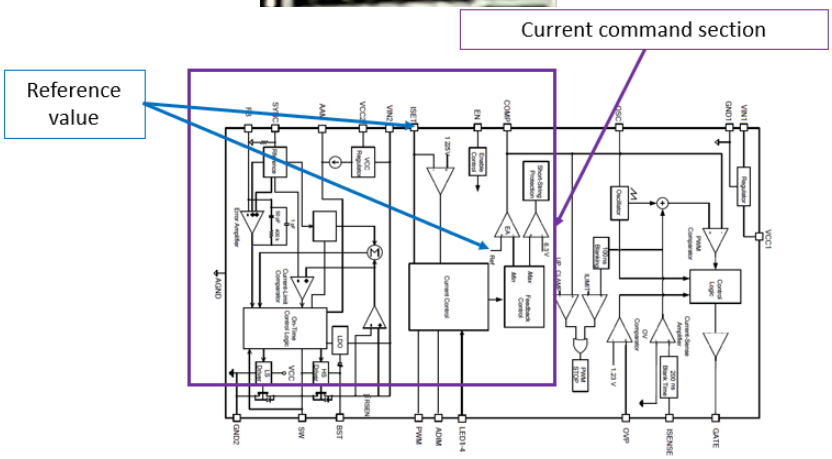

The Future of Analog IC Technology
https://www.monolithicpower.com/en/mp3378.html

MP3378
24 V, 4-Channel WLED Controller Plus High-Efficiency Buck Converter

110. The products accused of infringing the ’830 patent comprise a current comparing section that compares the output current detected by the output current detecting section and the reference value specified by the current command section. On information and belief, the BOE B802-1R chipset included in the BOE LCM model no. NE135FBM-N41 is configured such that each comprise a current comparing section that compares the output current detected by the output current detecting section and the reference value specified by the current command section. No publicly available information exists on the BOE B802-1R chipset. On information and belief, the BOE B802-1R chipset is configured to perform the same functionality as the MP3378 chipset. The BOE 802-1R and MP3378 chipsets each drive a plurality of channels of LEDs of the backlight of an LCM, such that each of the BOE B802-1R and the MP3378 chipsets are configured such that each comprise a current comparing section that compares the output current detected by the output current detecting section and the reference value specified by the current command section:

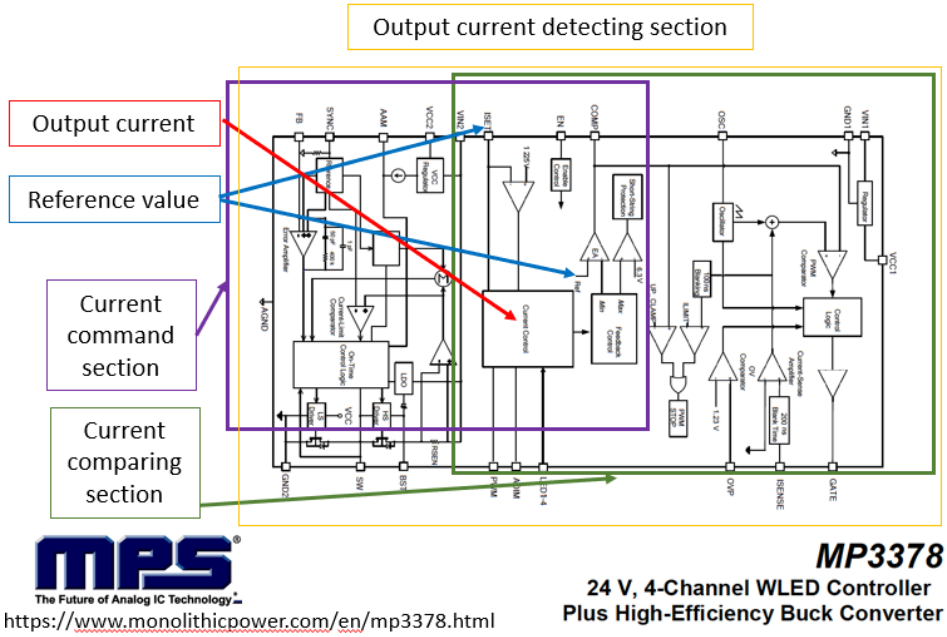

111. The products accused of infringing the ’830 patent comprise an impedance detecting section that detects an impedance of the semiconductor light source. On information and belief, the BOE B802-1R chipset included in the BOE LCM model no. NE135FBM-N41 is configured such that each comprise an impedance detecting section that detects an impedance of the semiconductor light source. No publicly available information exists on the BOE B802-1R chipset. On information and belief, the BOE B802-1R chipset is configured to perform the same functionality as the MP3378 chipset. The BOE 802-1R and MP3378 chipsets each drive a plurality of channels of LEDs of the backlight of an LCM, such that each of the BOE B802-1R and the MP3378 chipsets are configured such that each comprise an impedance detecting section that detects an impedance of the semiconductor light source:

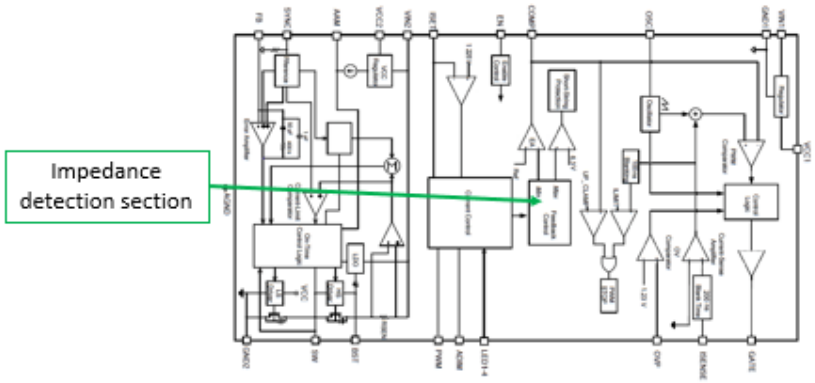

MP3378
24 V, 4-Channel WLED Controller
Plus High-Efficiency Buck Converter
https://www.monolithicpower.com/en/mp3378.html

112. The products accused of infringing the ’830 patent are configured such that the output voltage controlling section controls the output voltage of the voltage source based on an output of the current comparing section and an output of the impedance detecting section. On information and belief, the BOE B802-1R chipset included in the BOE LCM model no. NE135FBM-N41 are each configured such that the output voltage controlling section controls the output voltage of the voltage source based on an output of the current comparing section and an output of the impedance detecting section. No publicly available information exists on the BOE B802-1R chipset. On information and belief, the BOE B802-1R chipset is configured to perform the same functionality as the MP3378 chipset. The BOE 802-1R and MP3378 chipsets each drive a plurality of channels of LEDs of the backlight of an LCM, such that each of the BOE B802-1R and the MP3378 chipsets are each configured such that the output voltage controlling section controls the output voltage of the voltage source based on an output of the current comparing section and an output of the impedance detecting section:

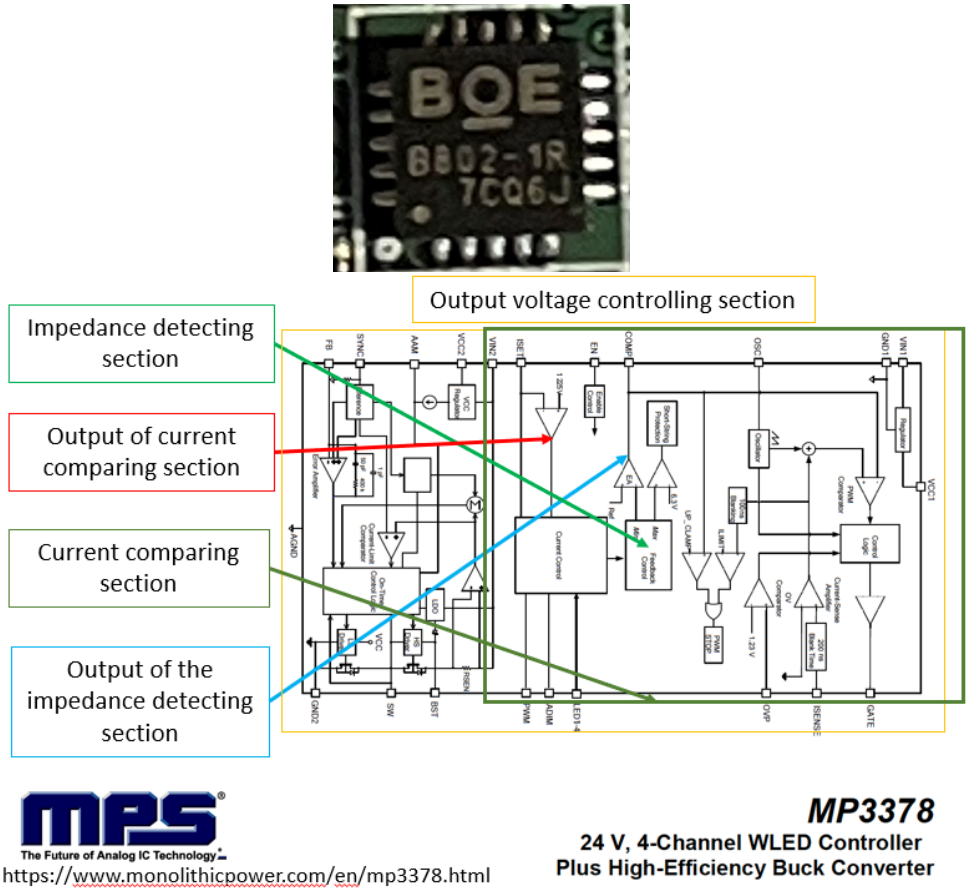

113. At a minimum, BOE has known about the ’830 patent since at least as early as the service date of this Original Complaint. Additionally, BOE has known about the ’830 patent since at least July 29, 2020, when BOE received notice of its infringement. Further, on information and belief, BOE’s conduct before the USPTO and foreign offices, suggest that it was aware of the ’830 patent prior to receiving any letters. For example, in prosecuting Chinese Patent No. CN102237049B, BOE has known of the ’830 patent.

INDIRECT INFRINGEMENT (35 U.S.C. §271(b))

114. On information and belief, since at least the above-mentioned dates when BOE was on notice of its infringement, BOE has actively induced, under U.S.C. § 271(b), its distributors, customers, subsidiaries, importers, testing outfits, and/or consumers to directly infringe one or

more claims of the ’830 patent to use, offer for sale, sell, use, and/or import the Accused Products. Since at least the notice provided on the above-mentioned dates, BOE does so with knowledge, or with willful blindness of the fact, that the induced acts constitute infringement of the ’830 patent. BOE intends to cause, and has taken affirmative steps to induce infringement by its distributors, importers, testing outfits, customers, subsidiaries, and/or consumers by at least, inter alia, creating advertisements that promote the infringing use of the Accused Products, creating and/or maintaining established distribution channels for the Accused Products into and within the United States, manufacturing the Accused Products in conformity with U.S. laws and regulations, distributing or making available instructions or manuals for these products to purchasers and prospective buyers, testing and certifying features related to infringing features in the Accused Products, and/or providing technical support, replacement parts, or services for these products to these purchasers in the United States. As just one example, BOE has actively induced distributors, retailers, customers, subsidiaries, importers, testing outfits, and/or consumers that have purchased, imported, used, offered for sale, and/or sold Accused Products in the U.S. by marking its Accused Products with UL Solutions labels indicating compliance with U.S. laws and regulations for the Accused Products destined and intended to be sold in the U.S. https://marks.ul.com/about/ul-listing-and-classification-marks/appearance-and-significance/marks-for-north-america/. In another example, BOE has actively induced distributors, retailers, customers, subsidiaries, importers, testing outfits, and/or consumers that have purchased, imported, used, offered for sale, and/or sold to include the accused power supply boards and/or LCMs that already comply with U.S. laws and regulations via UL Solutions in accused end products (e.g., TVs, monitors, laptops, tablets, mobile phones) because it allows for such entities to streamline the UL Solutions certification process for such end products if the components have already been certified by UL

Solutions. https://marks.ul.com/about/ul-listing-and-classification-marks/appearance-and-significance/marks-for-north-america/.

115. On information and belief, despite having knowledge of the ’830 patent and its infringement, BOE specifically intended for others to import and sell products accused of infringing the ’830 patent. For example, BOE specifically intended for its U.S.-based subsidiaries or customers to import and sell products accused of infringing the ’830 patent. On information and belief, Defendant instructs and encourages the importers to import and/or sell products accused of infringing the ’830 patent. On information and belief, the purchase and sale agreements between BOE and the importers provide such instruction and/or encouragement. Further, on information and belief, BOE’s U.S.-based subsidiaries exist for inter alia, the purpose of importing and selling products accused of infringing the ’830 patent in the United States.

116. Upon information and belief, despite having knowledge of the ’830 patent and knowledge that it is directly and/or indirectly infringing one or more claims of the ’830 patent, Defendant has nevertheless continued its infringing conduct and disregarded an objectively high likelihood of infringement. Defendant’s infringing activities relative to the ’830 patent have been, and continue to be, willful, wanton, malicious, in bad-faith, deliberate, consciously wrongful, flagrant, and an egregious case of misconduct beyond typical infringement such that Plaintiff is entitled under 35 U.S.C. § 284 to enhanced damages up to three times the amount found or assessed.

117. Plaintiff has been damaged as a result of Defendant’s infringing conduct described in this Count. Defendant is, thus, liable to Plaintiff in an amount that adequately compensates Plaintiff for Defendant’s infringements, which, by law, cannot be less than a reasonable royalty, together with interest and costs as fixed by this Court under 35 U.S.C. § 284.

118. Plaintiff has complied with the requirements of 35 U.S.C. § 287, to the extent necessary and/or applicable, and is entitled to collect pre- and post-filing damages for Defendant's infringements of the '830 patent.

CONCLUSION

119. Plaintiff is entitled to recover from Defendant the damages sustained by Plaintiff as a result of the Defendant's wrongful acts in an amount subject to proof at trial, which, by law, cannot be less than a reasonable royalty, together with interest and costs as fixed by this Court.

120. Plaintiff has incurred and will incur attorneys' fees, costs, and expenses in the prosecution of this action. The circumstances of this dispute may give rise to an exceptional case within the meaning of 35 U.S.C. § 285, and Plaintiff is entitled to recover its reasonable and necessary attorneys' fees, costs, and expenses.

JURY DEMAND

Plaintiff requests a trial by jury pursuant to Rule 38 of the Federal Rules of Civil Procedure.

PRAYER FOR RELIEF

Plaintiff asks that the Court find in its favor and against Defendant and that the Court grant Plaintiff the following relief:

1. A judgment that Defendant has infringed the Asserted Patents as alleged herein, directly and/or indirectly by way of inducing infringement of such patents;
2. A judgment for an accounting of all damages sustained by Plaintiff as a result of the acts of infringement by Defendant;

3. A judgment and order requiring Defendant to pay Plaintiff damages under 35 U.S.C. § 284, including up to treble damages as provided by 35 U.S.C. § 284, and any royalties determined to be appropriate;
4. A judgment and order requiring Defendant to pay Plaintiff pre-judgment and post-judgment interest on the damages awarded;
5. A judgment and order finding this to be an exceptional case and requiring Defendant to pay the costs of this action (including all disbursements) and attorneys' fees as provided by 35 U.S.C. § 285; and
6. Such other and further relief as the Court deems just and equitable.

Dated: March 20, 2025

Respectfully submitted,

/s/ *Patrick J. Conroy*
Patrick J. Conroy
Texas Bar No. 24012448
Justin Kimble
Texas Bar No. 24036909
T. William Kennedy Jr.
Texas Bar No. 24055771
Jon Rastegar
Texas Bar No. 24064043
Nelson Bumgardner Conroy PC
2727 North Harwood Street
Suite 250
Dallas, TX 75201
Tel: (214) 446-4950
pat@nelbum.com
justin@nelbum.com
bill@nelbum.com
jon@nelbum.com

John P. Murphy
Texas Bar No. 24056024
Nelson Bumgardner Conroy PC
3131 W 7th St
Suite 300
Fort Worth, TX 76107
Tel: (817) 806-3808
murphy@nelbum.com

Attorneys for Plaintiff
BISHOP DISPLAY TECH LLC