IN THE UNITED STATES DISTRICT COURT
FOR THE EASTERN DISTRICT OF TEXAS
(MARSHALL DIVISION)

BISHOP DISPLAY TECH LLC,	§	
	§	
Plaintiff,	§	
	§	**C.A. No. 2:21-cv-139**
v.	§	
	§	**JURY TRIAL DEMANDED**
SAMSUNG ELECTRONICS CO., LTD.; SAMSUNG ELECTRONICS AMERICA, INC.; and SAMSUNG DISPLAY CO., LTD., A KOREAN CORPORATION	§	
	§	
	§	
	§	
	§	
Defendants.		

PLAINTIFF'S ORIGINAL COMPLAINT FOR PATENT INFRINGEMENT

Plaintiff Bishop Display Tech LLC ("Bishop" or "Plaintiff") files this Original Complaint against Defendants Samsung Electronics Co., Ltd. ("SEC"), Samsung Electronics America, Inc. ("SEA"), and Samsung Display Co., Ltd. ("SDC") (collectively "Samsung" or "Defendants") for infringement of U.S. Patent No. 6,819,377 (the "'377 patent"), U.S. Patent No. 6,822,706 (the "'706 patent"), U.S. Patent No. 7,583,347 (the "'347 patent"), U.S. Patent No. 7,995,047 (the "'047 patent"), U.S. Patent No. 8,093,830 (the "'830 patent"), and U.S. Patent No. 8,016,449 (the "'449 patent") (collectively, the "Asserted Patents").

THE PARTIES

1. Plaintiff is a Texas limited liability company with its principal place of business in the Eastern District of Texas.

2. On information and belief, SEC is a company organized and existing under the laws of the Republic of Korea with its principal place of business located at 129 Samsung-ro, Yeongtong-gu, Suwon-si, Gyeonggi-do, 443-742 in the Republic of Korea. SEC may be served at least by process under the Hague Convention.

IPR2025-01330
BOE Technology v. Bishop Display Tech
Bishop Display's Exhibit 2008
Ex. 2008, Page 1

3. On information and belief, SEA does business in the State of Texas and in the Eastern District of Texas, is a New York corporation with its principal place of business at 85 Challenger Road, Ridgefield Park, New Jersey 07660 and is a wholly-owned subsidiary of SEC. SEA has a business location in this District at 6625 Excellence Way, Plano, TX. 75023. SEA may be served in Texas at least via its registered agent, CT Corporation System, 1999 Bryan Street, Suite 900, Dallas, Texas 75201.

4. On information and belief, SDC is a Korean corporation, and wholly-owned subsidiary of SEC, with its principal place of business located at 1, Samsung-ro, Giheung-gu, Yongin-si, Gyeonggi-Do, in the Republic of Korea.

5. Defendant SDC makes and supplies displays incorporated into the accused products. Defendants SEC and SEA make and supply the accused products.

6. Upon information and belief, SEC, SDC, and SEA, along with other foreign and U.S.-based subsidiaries (which act as part of a global network of overseas sales and manufacturing subsidiaries on behalf of SEC) have operated as agents of one another and vicariously as parts of the same business group to work in concert together and enter into agreements that are nearer than arm's length. For example, SEC (and SDC), alone and via at least SEA's activities, conducts business in the United States, including importing, distributing, and selling the accused display products that incorporate devices, systems, and processes that infringe the Asserted Patents in Texas and this judicial district. *See Trois v. Apple Tree Auction Center, Inc.*, 882 F.3d 485, 490 (5th Cir. 2018) ("A defendant may be subject to personal jurisdiction because of the activities of its agent within the forum state…."); *see also Cephalon, Inc. v. Watson Pharmaceuticals, Inc.*, 629 F. Supp. 2d 338, 348 (D. Del. 2009) ("The agency theory may be applied not only to parents and subsidiaries, but also to companies that are 'two arms of the same business group,' operate in

IPR2025-01330
BOE Technology v. Bishop Display Tech
Bishop Display's Exhibit 2008
Ex. 2008, Page 2

concert with each other, and enter into agreements with each other that are nearer than arm's length.").

7. Through offers to sell, sales, imports, distributions, and other related agreements to transfer ownership of SEC accused display products with distributors and customers operating in and maintaining a significant business presence in the U.S. and/or its U.S. subsidiary SEA, SEC and SDC do business in the U.S., the state of Texas, and in the Eastern District of Texas.

JURISDICTION AND VENUE

8. This action arises under the patent laws of the United States, namely 35 U.S.C. §§ 271, 281, and 284-285, amongst others.

9. This Court has subject matter jurisdiction pursuant to 28 U.S.C. §§ 1331 and 1338(a).

10. With respect to SEC, venue is proper in this judicial district pursuant to 28 U.S.C. §§ 1391(c). SEC and SDC are foreign entities and may be sued in any judicial district under 28 U.S.C. § 1391(c)(3).

11. With respect to SEA, venue is proper in this District under 28 U.S.C. § 1400(b). On information and belief, SEA has committed acts of infringement in the District and/or has induced acts of patent infringement by others in this District and has a regular and established place of business within the District. For example, Samsung has offices at 6625 Excellence Way, Plano, TX. 75023.

12. On information and belief, each Defendant is subject to this Court's specific and general personal jurisdiction pursuant to due process and/or the Texas Long Arm Statute, due at least to its substantial business in this State and judicial district, including: (A) performing at least part of its infringing activities alleged herein; and (B) regularly doing or soliciting business,

IPR2025-01330
BOE Technology v. Bishop Display Tech
Bishop Display's Exhibit 2008
Ex. 2008, Page 3

engaging in other persistent conduct, and/or deriving substantial revenue from goods sold and services provided to Texas residents vicariously through and/or in concert with its alter egos, intermediaries, agents, distributors, importers, customers, subsidiaries, and/or consumers. Defendants have placed and continue to place infringing products, such as televisions, displays, monitors, and other display devices, into the stream of commerce via an established distribution channel with the knowledge and/or intent that those products were sold and continue to be sold in the United States and Texas, including in this District.

13. On information and belief, Defendants have significant ties to, and presence in, the State of Texas and the Eastern District of Texas, making venue in this judicial district both proper and convenient for this action. For Defendants SDC and SEC, venue is proper as to a foreign defendant in any district. Defendant SEA has regular and established places of business in this district at: 1301 East Lookout Drive, Richardson, Texas 75080; and 6635 Declaration Drive, Plano, TX 75023.

COUNT I
(Infringement of U.S. Patent No. 6,819,377)

14. Plaintiff incorporates paragraphs 1 through 13 herein by reference.

15. This cause of action arises under the patent laws of the United States, and in particular, 35 U.S.C. §§ 271, *et seq*.

16. Plaintiff is the owner of the ’377 patent with all substantial rights to the ’377 patent including the exclusive right to enforce, sue, and recover damages for past infringement.

17. The ’377 patent is valid, enforceable and was duly issued in full compliance with Title 35 of the United States Code.

IPR2025-01330
BOE Technology v. Bishop Display Tech
Bishop Display's Exhibit 2008
Ex. 2008, Page 4

DIRECT INFRINGEMENT (35 U.S.C. §271(a))

18. Defendants infringed literally, and/or under the Doctrine of Equivalents, one or more claims of the ’377 patent in this judicial district and elsewhere in Texas and the United States.

19. On information and belief, Defendants, either by themselves (individually and/or in concert) and/or via an agent, infringed literally, and/or under the Doctrine of Equivalents, infringed at least claim 1 of the ’377 patent by, among other things, making, using, selling, offering for sale, and/or importing products, such as televisions, that satisfy the limitations of claim 1. Further, SEC is vicariously liable for this infringing conduct of SDC and/or SEA, as well as other related Samsung entities, and affiliates, (under both the alter ego and agency theories) because, as an example and upon information and belief, SEC, SDC, and SEA are essentially the same company, and SEC has the right and ability to control SDC’s and SEA’s infringing acts and receives a direct financial benefit from SEA’s and SDC’s infringement.

20. The products accused of infringing the ’377 patent comprise a liquid crystal display device. For example, the QN55 includes an LCD display and LCM label.[1]

21. The products accused of infringing the ’377 patent comprise a liquid crystal panel comprising liquid crystal cells, a first plate disposed on a displaying side of the cells, and a second plate disposed on a reverse side of the cells. For example, an examination of the QN55 television demonstrates this as shown in the below paragraphs:

[1] For each count in this Original Complaint, the various images in each paragraph for each count demonstrate the representative infringement.

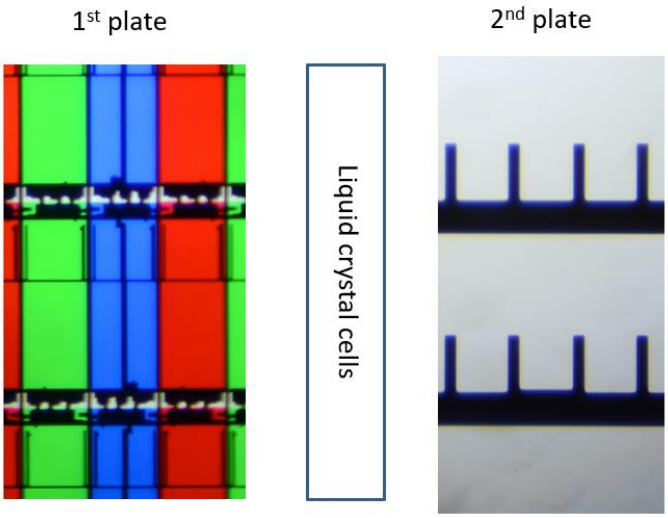

22. The products accused of infringing the ’377 patent comprise a liquid crystal driver electrically connected with the liquid crystal panel through a circuit pattern. An examination of the QN55 television demonstrates this:

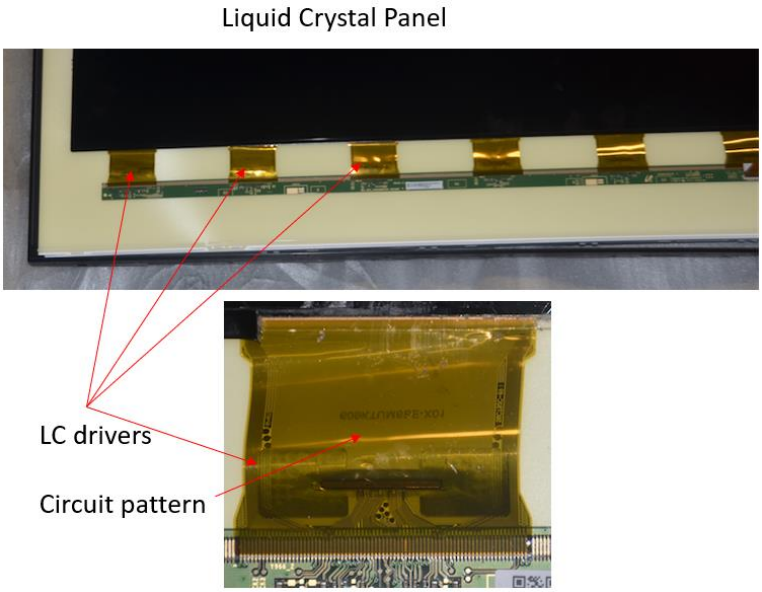

23. The products accused of infringing the ’377 patent comprise a light shielding material disposed adjacent said liquid crystal driver so as to prevent an outer light from being incident to said liquid crystal driver. An examination of the QN55 television demonstrates this:

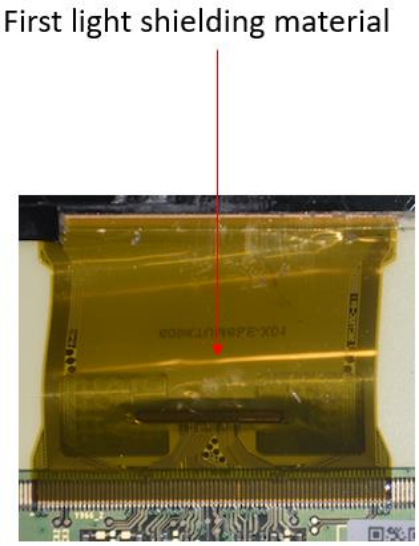

24. The products accused of infringing the ’377 patent comprise a film carrier comprising said circuit pattern formed on a resin film. An examination of the QN55 television demonstrates this:

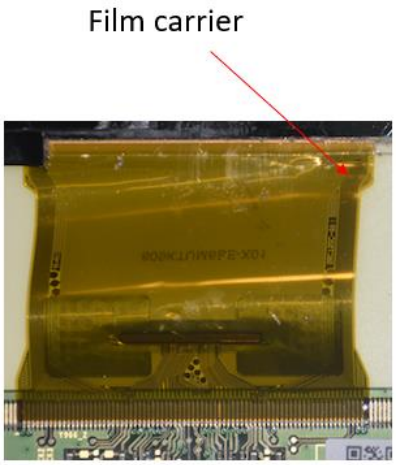

25. The products accused of infringing the ’377 patent are configured such that the liquid crystal driver is mounted on the liquid crystal panel by a light shielding resin disposed on said liquid crystal panel so as to cover one end of the film carrier and a side surface of said liquid crystal driver. An examination of the QN55 television demonstrates this:

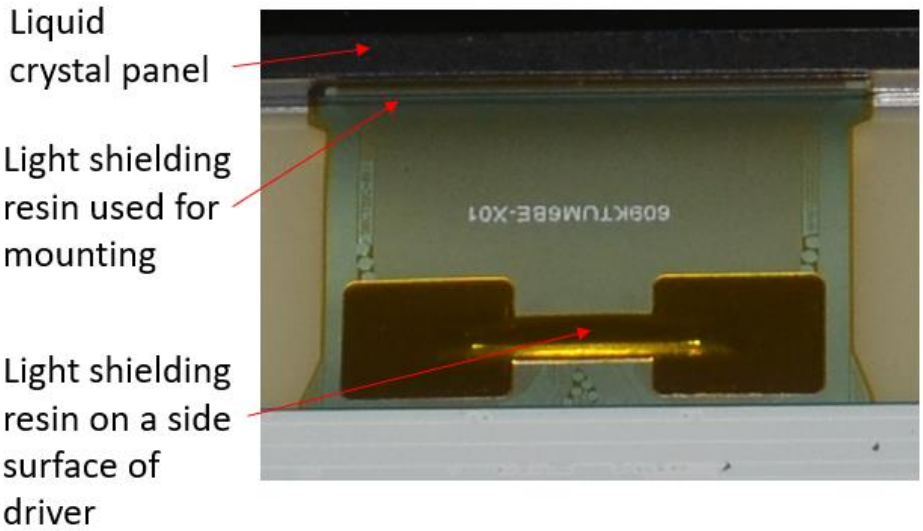

26. At a minimum, Defendants have known of the ’377 patent at least as early as the service date of this original complaint. Further, on information and belief, Defendants have known of the ’377 patent at least as early as the filing date of the original complaint. Each Defendant is liable for these infringements of the ’377 patent pursuant to 35 U.S.C. § 271.

27. Plaintiff has been damaged as a result of Defendants’ infringing conduct described in this Count. Defendants are, thus, liable to Plaintiff in an amount that adequately compensates Plaintiff for Defendants’ infringements, which, by law, cannot be less than a reasonable royalty, together with interest and costs as fixed by this Court under 35 U.S.C. § 284.

28. Plaintiff has complied with the requirements of 35 U.S.C. § 287, to the extent necessary and/or applicable, and is entitled to collect pre- and post-filing damages for Defendants’ infringements of the ’377 patent.

COUNT II
(Infringement of U.S. Patent No. 6,822,706)

29. Plaintiff incorporates paragraphs 1 through 28 herein by reference.

30. This cause of action arises under the patent laws of the United States, and in particular, 35 U.S.C. §§ 271, *et seq*.

31. Plaintiff is the owner of the ’706 patent with all substantial rights to the ’706 patent including the exclusive right to enforce, sue, and recover damages for past and future infringement.

32. The ’706 patent is valid, enforceable and was duly issued in full compliance with Title 35 of the United States Code.

DIRECT INFRINGEMENT (35 U.S.C. §271(a))

33. Defendants infringed one or more claims of the ’706 patent in this judicial district and elsewhere in Texas and the United States.

34. On information and belief, Defendants, either by themselves (individually and/or in concert) and/or via an agent, infringed literally, and/or under the Doctrine of Equivalents, infringed at least claim 1 of the ’706 patent by, among other things, making, using, selling, offering for sale, and/or importing products, such as televisions, that satisfy the limitations of claim 1. Further, SEC is vicariously liable for this infringing conduct of SDC and/or SEA, as well as other related Samsung entities, and affiliates, (under both the alter ego and agency theories) because, as an example and upon information and belief, SEC, SDC, and SEA are essentially the same company, and SEC has the right and ability to control SDC’s and SEA’s infringing acts and receives a direct financial benefit from SEA’s and SDC’s infringement.

35. The products accused of infringing the ’706 patent comprise a liquid crystal display panel. For example, the QN55 includes an LCD display panel and LCM label.

36. The products accused of infringing the ’706 patent comprise a liquid crystal panel comprising liquid crystal cells, a first plate disposed on a displaying side of the cells, and a second

plate disposed on a reverse side of the cells. For example, an examination of the QN55 television demonstrates this:

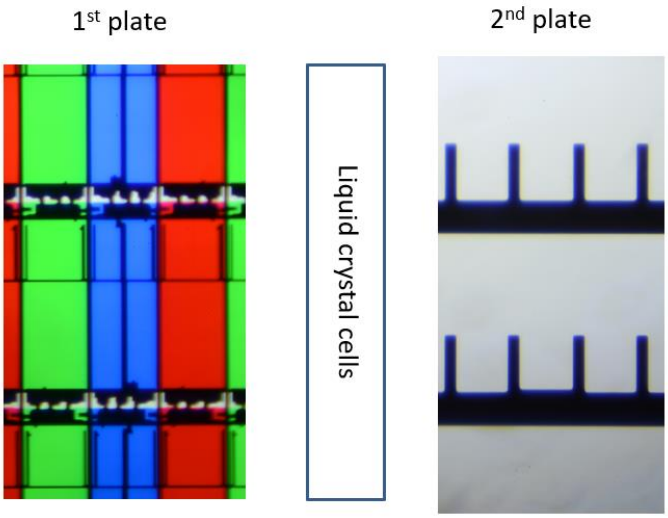

37. The products accused of infringing the ’706 patent comprise a liquid crystal driver electrically connected with the liquid crystal panel through a circuit pattern. An examination of the QN55 television demonstrates this:

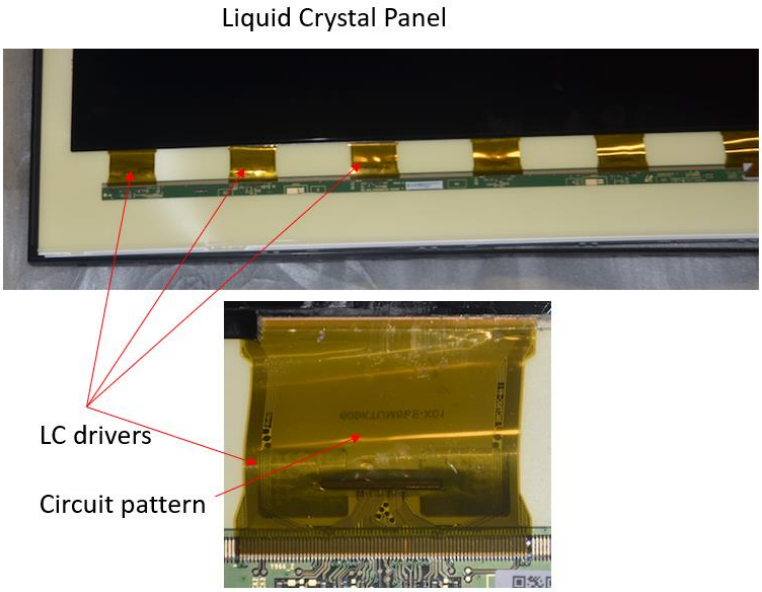

38. The products accused of infringing the ’706 patent comprise a first light shielding material disposed adjacent a face of said liquid crystal driver so as to prevent an outer light from

being incident to said liquid crystal driver. An examination of the QN55 television demonstrates this:

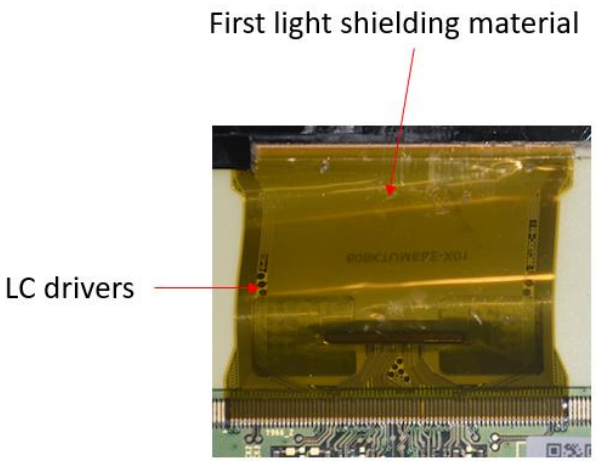

39. The products accused of infringing the ’706 patent comprise a second light shielding material disposed adjacent an opposite face of said liquid crystal driver so as to prevent an outer light from being incident to said liquid crystal driver. An examination of the QN55 television demonstrates this:

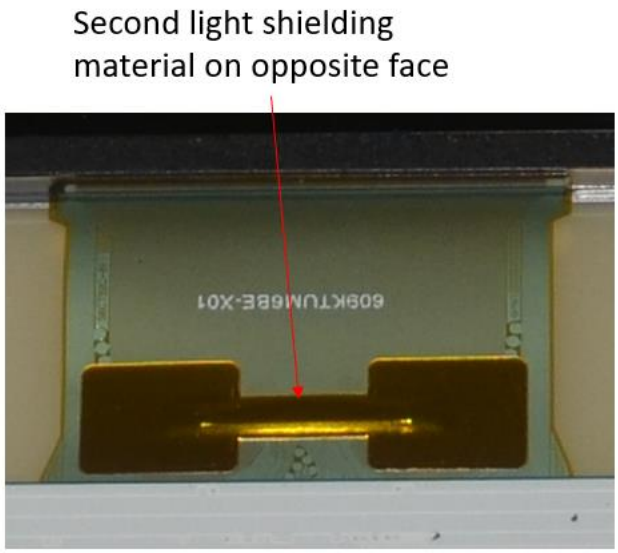

40. The products accused of infringing the ’706 patent comprise a diffusion sheet located adjacent said liquid crystal display panel. An examination of the QN55 television demonstrates this:

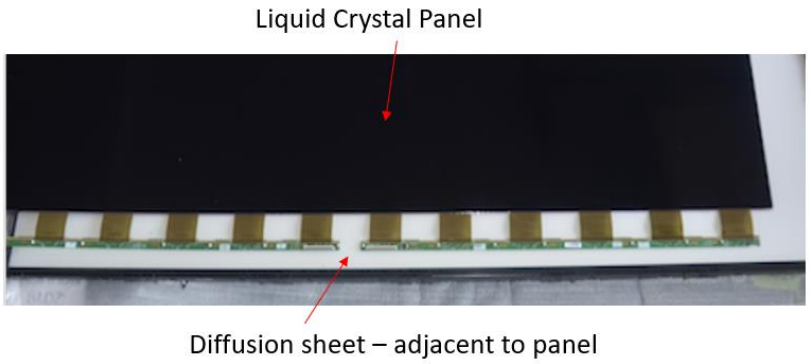

41. The products accused of infringing the ’706 patent are configured such that the diffusion sheet comprises a light diffusing area and a light absorbing area located on the outer periphery thereof, the light diffusing area serving to diffuse illumination light from a light source to the liquid crystal display panel, and the light absorbing area serving to absorb the extraneous light incident on said liquid crystal driver. For example, the QN55 includes a light diffusing area that diffuses diffuse illumination light from a light source to the liquid crystal display panel. The QN55 also includes a light absorbing area that absorbs the extraneous light incident on said liquid crystal driver. An examination of the QN55 television demonstrates this:

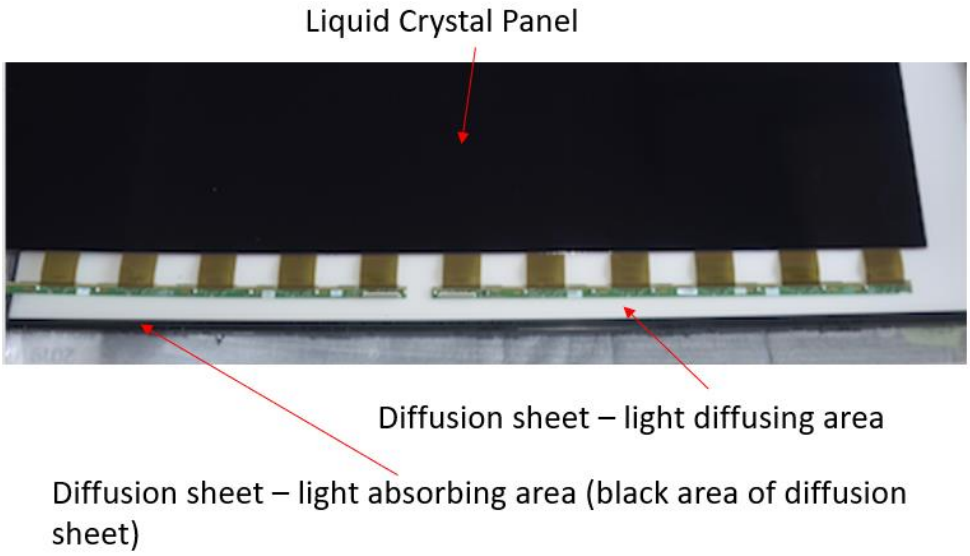

42. At a minimum, Defendants have known of the ’706 patent at least as early as the service date of this original complaint. Further, on information and belief, Defendants have known

of the ’706 patent at least as early as the filing date of the original complaint. In addition, Defendants have known about the ’706 patent since at least July 29, 2020, when Defendants received notice of its infringement.

INDIRECT INFRINGEMENT (35 U.S.C. §271(b))

43. Based on the information presently available to Plaintiff, absent discovery, Defendants have also indirectly infringed one or more claims of the ’706 patent by inducing infringement, including, at least, the importation and sale of products that, as set forth above, infringe the ’706 patent. For example, Defendants induce and have induced the importation and sale of products accused of infringing the ’706 patent (e.g., QN55) by retailers. Further, SEC and/or SDC also induce and have induced the importation and sale of products accused of infringing the ’706 patent (e.g., QN55) by SEA.

44. Defendants have known of the ’706 patent and its infringement at least as early as the service date of this complaint. Further, on information and belief, Defendants have known of the ’706 patent and its infringement at least as early as the filing date of the original complaint. In addition, Defendants have known about the ’706 patent since at least July 29, 2020, when Defendants received notice of the ’706 patent and its infringement.

45. On information and belief, despite having knowledge of the ’706 patent and its infringement, Defendants specifically intended for retailers to import and sell products accused of infringing the ’706 patent. Further, SEC and/or SDC specifically intended for SEA to import and sell products accused of infringing the ’706 patent. On information and belief, Defendants instruct and encourage the importers to import and/or sell products accused of infringing the ’706 patent. On information and belief, the purchase and sale agreements between Defendants and the importers provide such instruction and/or encouragement. Further, on information and belief, SEA

IPR2025-01330
BOE Technology v. Bishop Display Tech
Bishop Display's Exhibit 2008
Ex. 2008, Page 13

exists for inter alia, the purpose of importing and selling products accused of infringing the ’706 patent in the United States.

46. Upon information and belief, despite having knowledge of the ’706 patent and knowledge that it is directly and/or indirectly infringing one or more claims of the ’706 patent, Defendants have nevertheless continued its infringing conduct and disregarded an objectively high likelihood of infringement. Defendants’ infringing activities relative to the ’706 patent have been, and continue to be, willful, wanton, malicious, in bad-faith, deliberate, consciously wrongful, flagrant, and an egregious case of misconduct beyond typical infringement such that Plaintiff is entitled under 35 U.S.C. § 284 to enhanced damages up to three times the amount found or assessed.

47. Each Defendant is liable for these infringements of the ’706 patent pursuant to 35 U.S.C. § 271.

48. Plaintiff has been damaged as a result of Defendants’ infringing conduct described in this Count. Defendants are, thus, liable to Plaintiff in an amount that adequately compensates Plaintiff for Defendants’ infringements, which, by law, cannot be less than a reasonable royalty, together with interest and costs as fixed by this Court under 35 U.S.C. § 284.

49. Plaintiff has complied with the requirements of 35 U.S.C. § 287, to the extent necessary and/or applicable, and is entitled to collect pre- and post-filing damages for Defendants’ infringements of the’706 patent.

COUNT III
(Infringement of U.S. Patent No. 7,583,347)

50. Plaintiff incorporates paragraphs 1 through 48 herein by reference.

51. This cause of action arises under the patent laws of the United States, and in particular, 35 U.S.C. §§ 271, *et seq*.

IPR2025-01330
BOE Technology v. Bishop Display Tech
Bishop Display's Exhibit 2008
Ex. 2008, Page 14

52. Plaintiff is the owner of the ’347 patent with all substantial rights to the ’347 patent including the exclusive right to enforce, sue, and recover damages for past infringement.

53. The ’347 patent is valid, enforceable and was duly issued in full compliance with Title 35 of the United States Code.

DIRECT INFRINGEMENT (35 U.S.C. §271(a))

54. Defendants have, and continue to, infringe one or more claims of the ’347 patent in this judicial district and elsewhere in Texas and the United States.

55. On information and belief, Defendants, either by themselves (individually and/or in concert) and/or via an agent, infringed literally, and/or under the Doctrine of Equivalents, infringe at least claim 1 of the ’347 patent by, among other things, making, using, selling, offering for sale, and/or importing products, such as televisions, that satisfy the limitations of claim 1. Further, SEC is vicariously liable for this infringing conduct of SDC and/or SEA, as well as other related Samsung entities, and affiliates, (under both the alter ego and agency theories) because, as an example and upon information and belief, SEC, SDC, and SEA are essentially the same company, and SEC has the right and ability to control SDC’s and SEA’s infringing acts and receives a direct financial benefit from SEA’s and SDC’s infringement.

56. The products accused of infringing the ’347 patent comprise a liquid crystal display. For example, the QN55 includes an LCD display and LCM label.

57. The products accused of infringing the ’347 patent comprise a liquid crystal panel including an array substrate having an upper surface on which a common electrode, a pixel electrode, a scanning signal line, a video signal line, and a semiconductor switching device are

formed, an opposing substrate disposed so as to be opposite to the upper surface of the array substrate, and a liquid crystal layer disposed between the array substrate and the opposing substrate. An examination of the QN55 television demonstrates this:

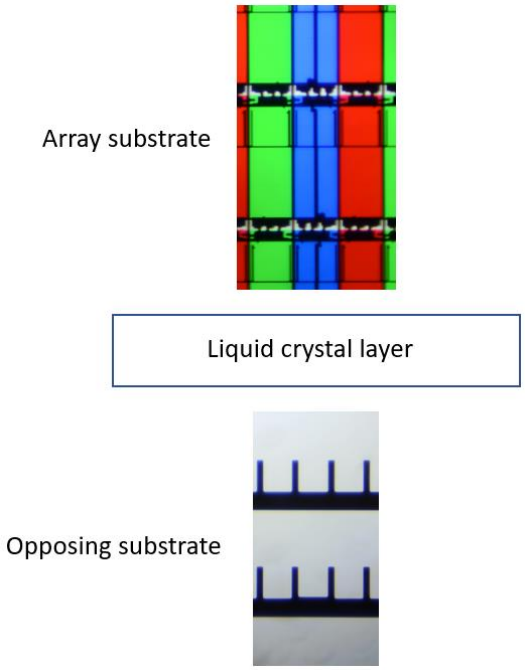

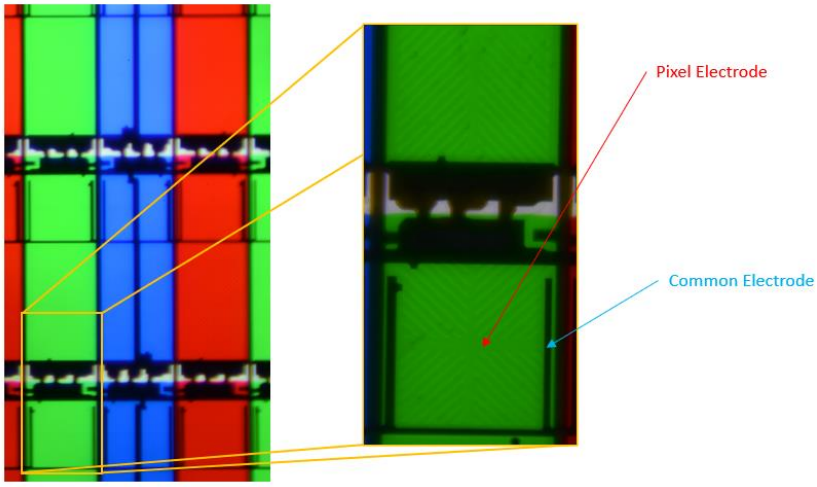

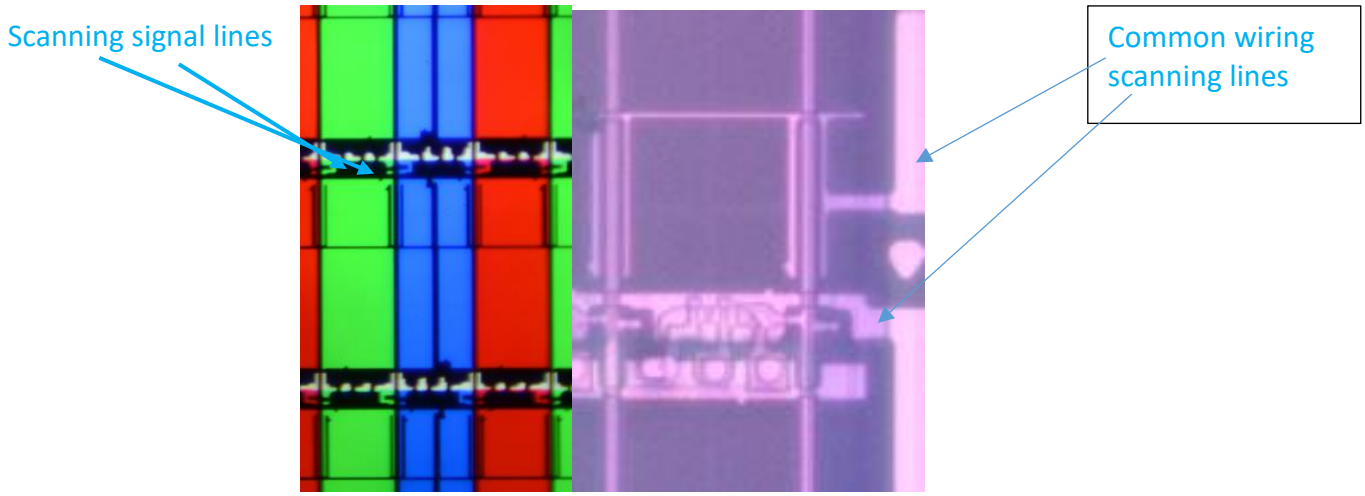

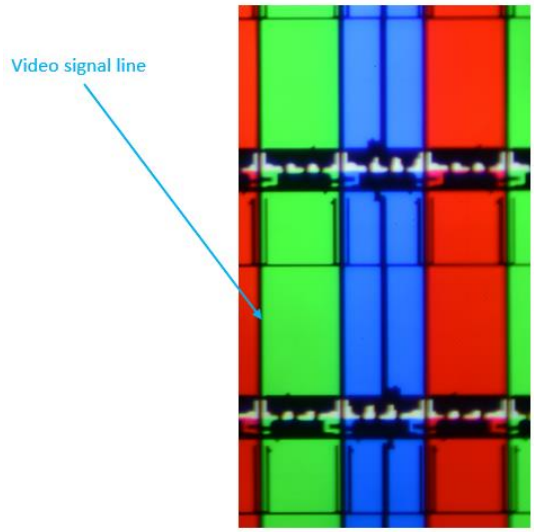

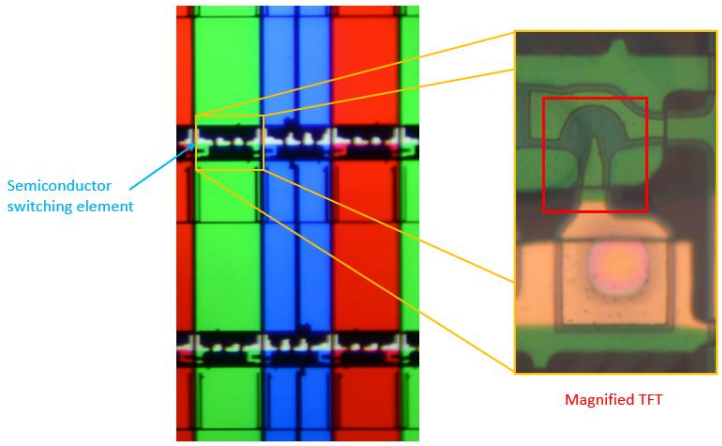

58. The products accused of infringing the ’347 patent comprise a reflecting face formed below the liquid crystal panel, wherein a light reflected on the reflecting face is transmitted

through the liquid crystal panel. The configuration of the products accused of infringing the ’347 patent is such that light reflected on the reflecting face is transmitted through the liquid crystal panel (the reflecting face is beneath the diffuser in the below illustration). An examination of the QN55 television demonstrates this:

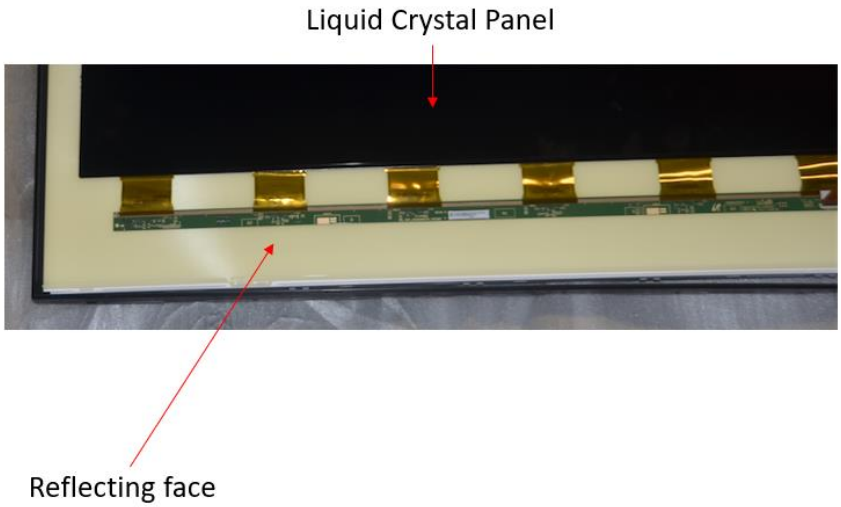

59. The products accused of infringing the ’347 patent are configured such that at least one electrode of the common electrode and the pixel electrode is constituted by an electrode portion and a wiring portion. For example, the pixel electrode is constituted by an electrode portion and a wiring portion. An examination of the QN55 television demonstrates this:

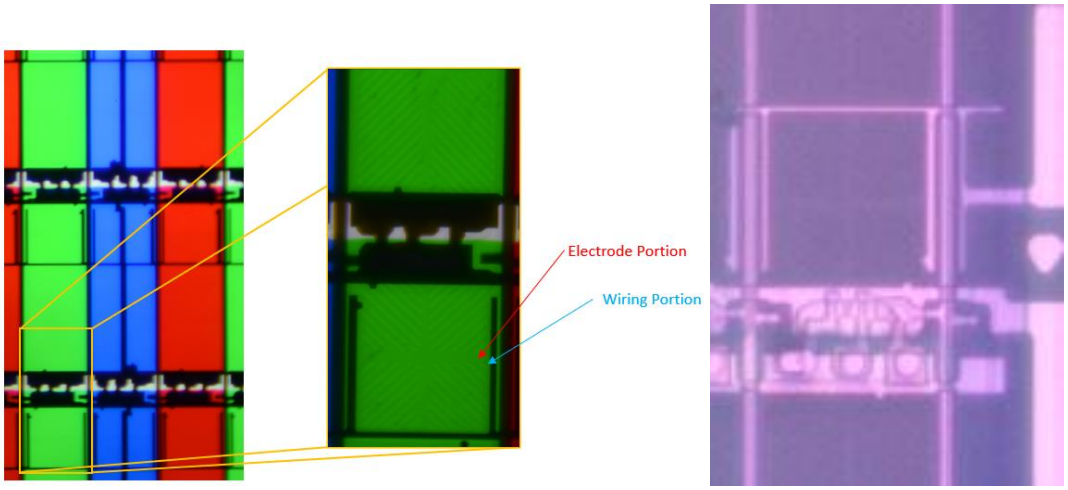

60. The products accused of infringing the ’347 patent are configured such that the electrode portion is at least partially constituted by a transparent electric conductor. For example, the pixel electrode is transparent. An examination of the QN55 television demonstrates this:

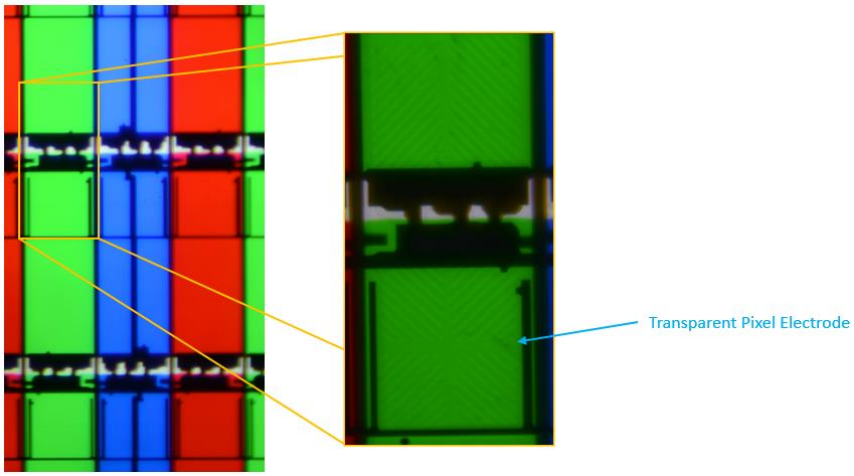

61. The products accused of infringing the ’347 patent are configured such that the electrode portion is formed in a layer separated by an insulating layer from a layer in which the scanning signal line is formed and the wiring portion is formed in the layer in which the scanning signal line is formed. On information and belief, the products accused of infringing the ’347 patent, including the QN55, are arranged such that the pixel electrode is above the scanning line and surrounded by an insulating layer. An examination of the QN55 television demonstrates this:

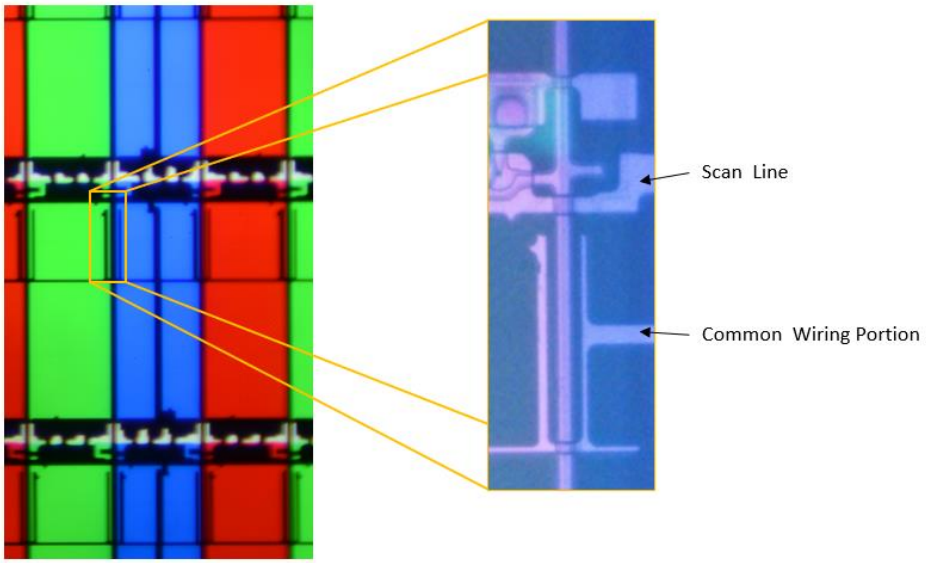

62. At a minimum, Defendants have known of the ’347 patent at least as early as the service date of this original complaint. Further, on information and belief, Defendants have known of the ’347 patent at least as early as the filing date of the original complaint. In addition, Defendants have known about the ’347 patent since at least July 29, 2020, when Defendants received notice of its infringement.

63. Upon information and belief, despite having knowledge of the ’347 patent and knowledge that it is directly and/or indirectly infringing one or more claims of the ’347 patent, Defendants have nevertheless continued its infringing conduct and disregarded an objectively high likelihood of infringement. Defendants’ infringing activities relative to the ’347 patent have been, and continue to be, willful, wanton, malicious, in bad-faith, deliberate, consciously wrongful, flagrant, and an egregious case of misconduct beyond typical infringement such that Plaintiff is entitled under 35 U.S.C. § 284 to enhanced damages up to three times the amount found or assessed.

IPR2025-01330
BOE Technology v. Bishop Display Tech
Bishop Display's Exhibit 2008
Ex. 2008, Page 20

INDIRECT INFRINGEMENT (35 U.S.C. §271(b))

64. Based on the information presently available to Plaintiff, Defendants have also indirectly infringed one or more claims of the ’347 patent by inducing infringement, including, at least, the importation and sale of products that, as set forth above, infringe the ’347 patent. For example, Defendants induce and have induced the importation and sale of products accused of infringing the ’347 patent (e.g., QN55) by retailers. Further, SEC and/or SDC also induce and have induced the importation and sale of products accused of infringing the ’347 patent (e.g., QN55) by SEA.

65. Defendants have known of the ’347 patent and its infringement at least as early as the service date of this complaint. Further, on information and belief, Defendants have known of the ’347 patent and its infringement at least as early as the filing date of the original complaint. In addition, Defendants have known about the ’347 patent since at least July 29, 2020, when Defendants received notice of the ’347 patent and its infringement.

66. On information and belief, despite having knowledge of the ’347 patent and its infringement, Defendants specifically intended for retailers to import and sell products accused of infringing the ’347 patent. Further, SEC and/or SDC specifically intended for SEA to import and sell products accused of infringing the ’347 patent. On information and belief, Defendants instruct and encourage the importers to import and/or sell products accused of infringing the ’347 patent. On information and belief, the purchase and sale agreements between Defendants and the importers provide such instruction and/or encouragement. Further, on information and belief, SEA exists for inter alia, the purpose of importing and selling products accused of infringing the ’347 patent in the United States.

IPR2025-01330
BOE Technology v. Bishop Display Tech
Bishop Display's Exhibit 2008
Ex. 2008, Page 21

67. Each Defendant is liable for these infringements of the ’347 patent pursuant to 35 U.S.C. § 271.

68. Plaintiff has been damaged as a result of Defendants’ infringing conduct described in this Count. Defendants are, thus, liable to Plaintiff in an amount that adequately compensates Plaintiff for Defendants’ infringements, which, by law, cannot be less than a reasonable royalty, together with interest and costs as fixed by this Court under 35 U.S.C. § 284.

69. Plaintiff has complied with the requirements of 35 U.S.C. § 287, to the extent necessary and/or applicable, and is entitled to collect pre- and post-filing damages for Defendants’ infringements of the’347 patent.

COUNT IV
(Infringement of U.S. Patent No. 7,995,047)

70. Plaintiff incorporates paragraphs 1 through 68 herein by reference.

71. This cause of action arises under the patent laws of the United States, and in particular, 35 U.S.C. §§ 271, *et seq*.

72. Plaintiff is the owner of the ’047 patent with all substantial rights to the ’047 patent including the exclusive right to enforce, sue, and recover damages for past and future infringement.

73. The ’047 patent is valid, enforceable and was duly issued in full compliance with Title 35 of the United States Code.

DIRECT INFRINGEMENT (35 U.S.C. §271(a))

74. Defendants have, and continue to, infringe one or more claims of the ’047 patent in this judicial district and elsewhere in Texas and the United States.

75. On information and belief, Defendants, either by themselves (individually and/or in concert) and/or via an agent, infringed literally, and/or under the Doctrine of Equivalents, infringe at least claim 1 of the ’047 patent by, among other things, making, using, selling, offering

for sale, and/or importing products, such as televisions, that satisfy the limitations of claim 1. Further, SEC is vicariously liable for this infringing conduct of SDC and/or SEA, as well as other related Samsung entities, and affiliates, (under both the alter ego and agency theories) because, as an example and upon information and belief, SEC, SDC, and SEA are essentially the same company, and SEC has the right and ability to control SDC's and SEA's infringing acts and receives a direct financial benefit from SEA's and SDC's infringement.

76. The products accused of infringing the '047 patent comprise a current driving device. For example, the QN55 includes an LCD display, which drives a current, and LCM label.

77. The products accused of infringing the '047 patent comprise a first voltage supply source for supplying a first voltage. An examination of the QN55 television demonstrates this:

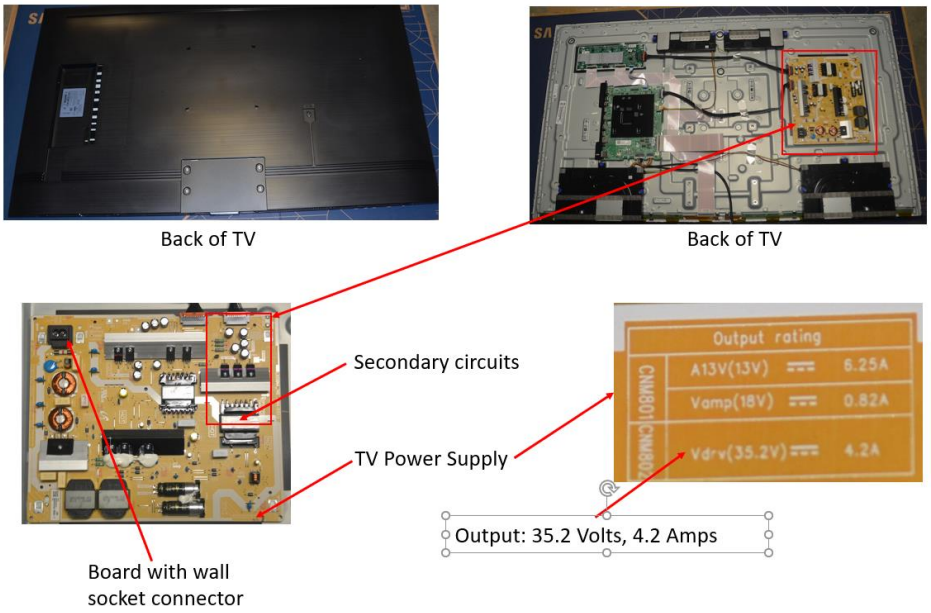

78. The products accused of infringing the '047 patent comprise a first current supply source for supplying a first electric current. An examination of the QN55 television demonstrates

a first current of 4.2 amps comes from a first voltage of 35.2 volts which is from the secondary side of the transformer circuits in the external power adapter:

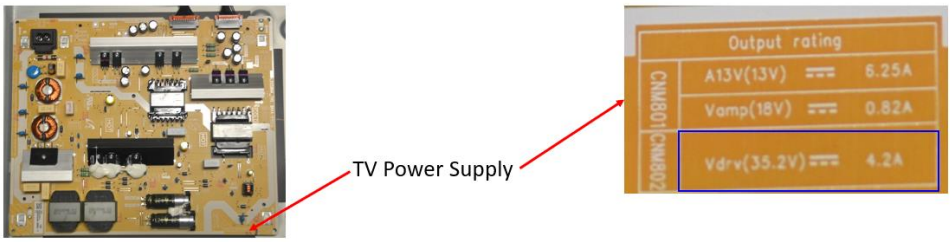

79. The products accused of infringing the ’047 patent comprise a plurality of output terminals. An examination of the QN55 television demonstrates this:

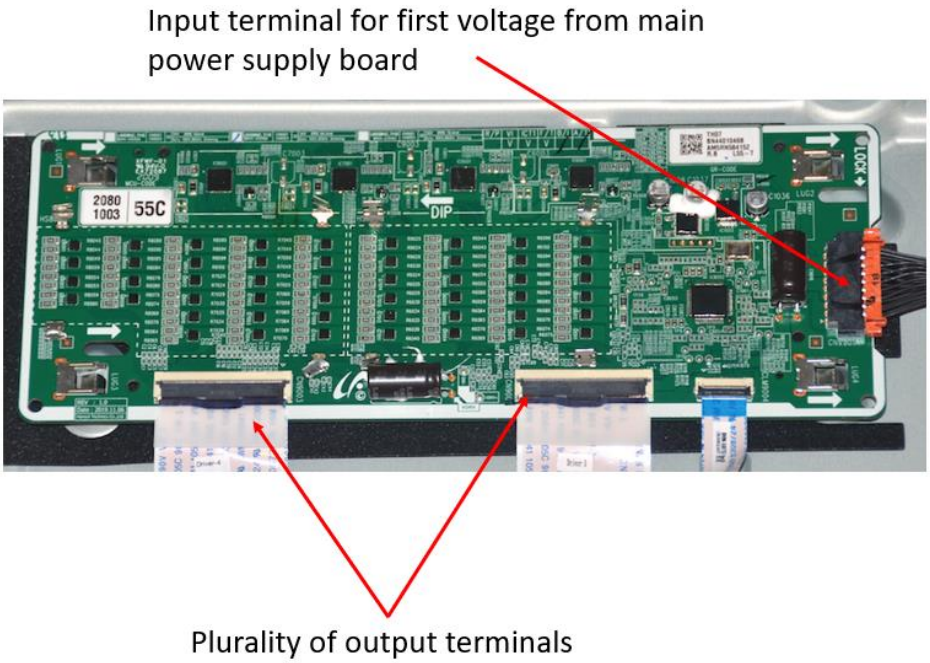

80. The products accused of infringing the ’047 patent comprise a plurality of current output circuits for outputting an electric current in accordance with said first electric current, each of said current output circuits comprising a current-voltage converting circuit, a voltage-current converting circuit, a voltage holding circuit having a terminal being connected to a reference voltage different from the first voltage, and at least one current output terminal. An examination

of the QN55 television demonstrates the presence of a plurality of current output circuits for outputting an electric current in accordance with said first electric current:

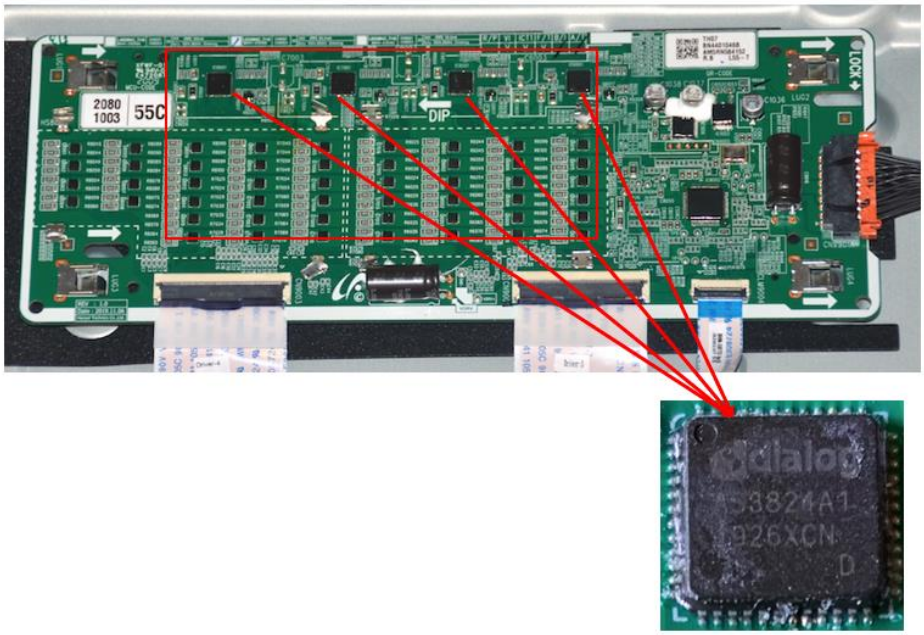

Plurality of Current Output Circuits

81. The products accused of infringing the ’047 patent are configured such that each of the current output circuits comprise a current-voltage converting circuit, and a voltage-current converting circuit. For example, an examination of the QN55 television demonstrates the presence of chipsets comprising a plurality of current output circuits for outputting an electric current in accordance with said first electric current. Documentation for chipsets in the QN55 provides evidence of this:

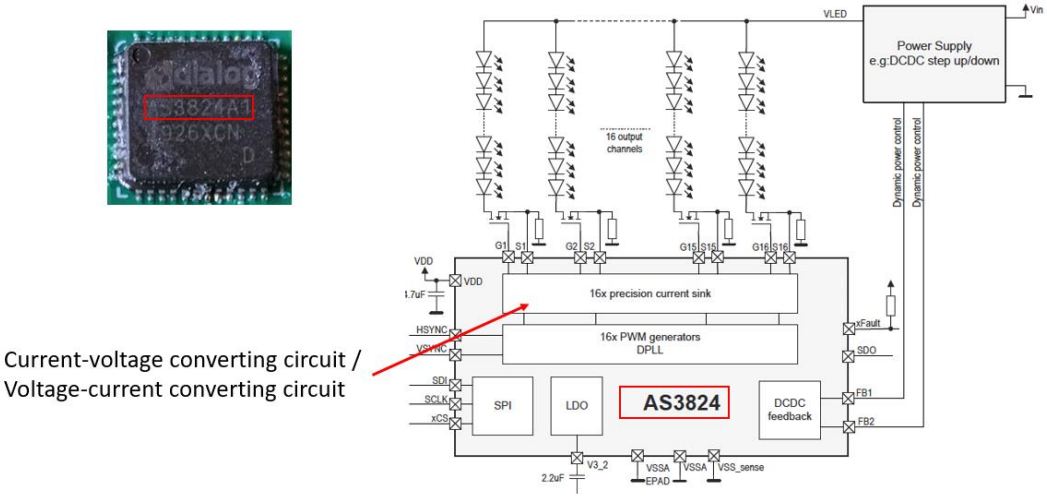

82. The products accused of infringing the ’047 patent are configured such that each of the current output circuits comprise a voltage holding circuit having a terminal being connected to a reference voltage different from the first voltage, and at least one current output terminal. For example, an examination of the QN55 television demonstrates the presence of chipsets that comprise a voltage holding circuit having a terminal being connected to a reference voltage different from the first voltage, and at least one current output terminal. Documentation for chipsets in the QN55 provides evidence of this:

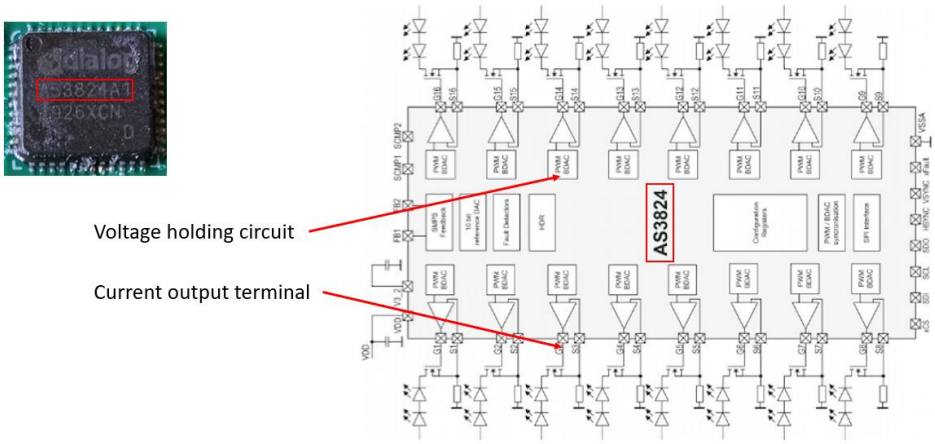

83. The products accused of infringing the ’047 patent are configured such that each of said circuits operates in three operation modes including a voltage supply mode, a current supply

mode, and a current output mode. For example, as shown above the Dialog semiconductor chip in the QN55 (AS3824) supports all three operation modes. For instance, the chipset operates to supply output voltage and current to 16 LED segments. The chipset can also operate in current output mode. Documentation for chipsets in the QN55 provides evidence of this:

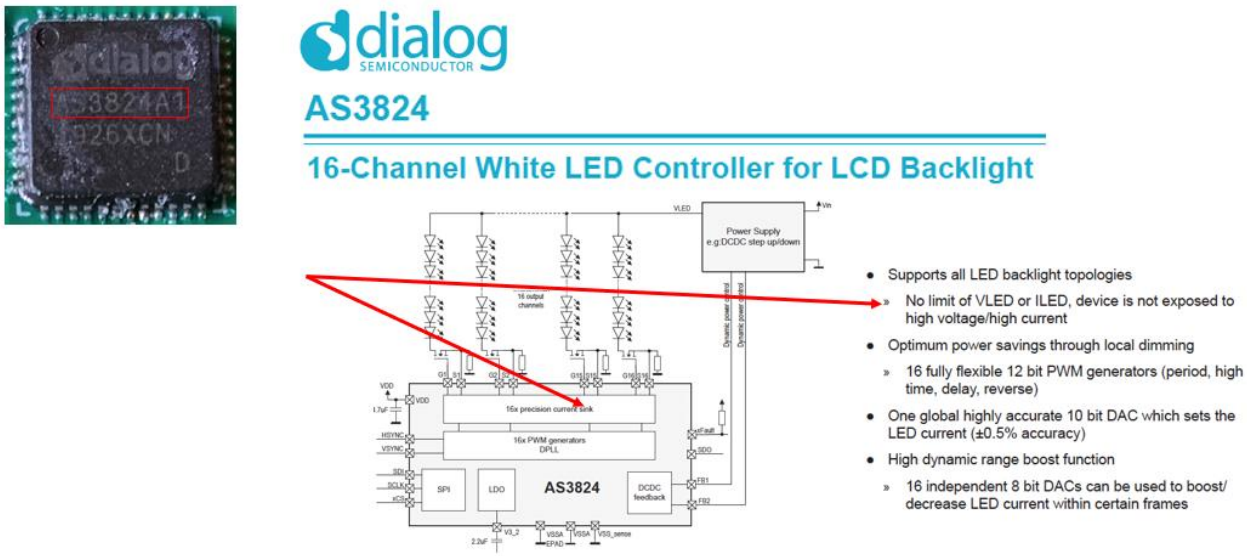

84. The products accused of infringing the ’047 patent are configured such that under said voltage supply mode, each of said current output circuits receives said first voltage from said first voltage supply source, and the first voltage is supplied to another terminal of said voltage holding circuit. For example, each of the Dialog semiconductor chips in the QN55 (AS3824) is configured in such a manner. Documentation for chipsets in the QN55 provides evidence of this:

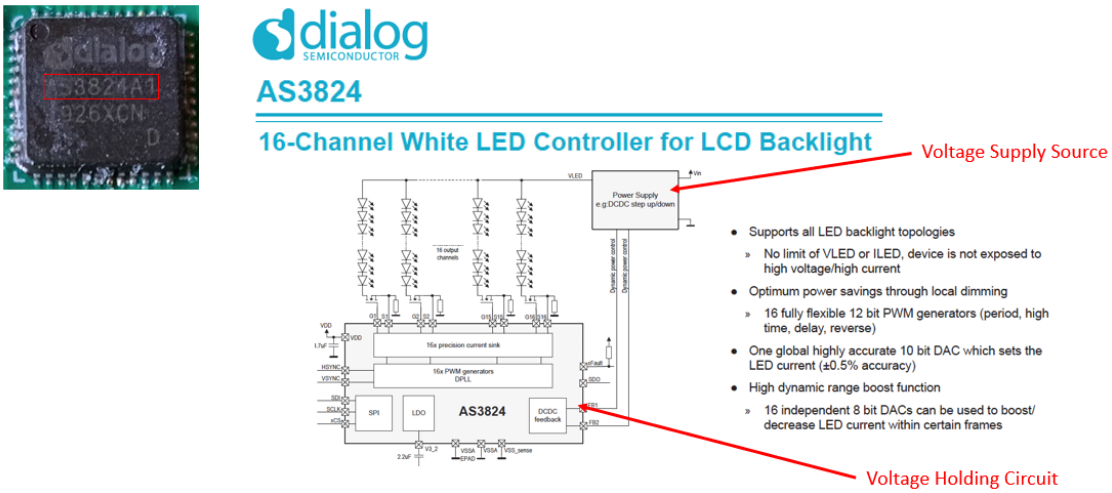

85. The products accused of infringing the ’047 patent are configured such that under said current supply mode, each of said current output circuits receives said first current from said first current supply source, and generates a second voltage by said current-voltage converting circuit, and the first current is supplied to said another terminal of said voltage holding circuit. For example, each of the Dialog semiconductor chips in the QN55 (AS3824) is configured in such a manner. Documentation for chipsets in the QN55 provides evidence of this:

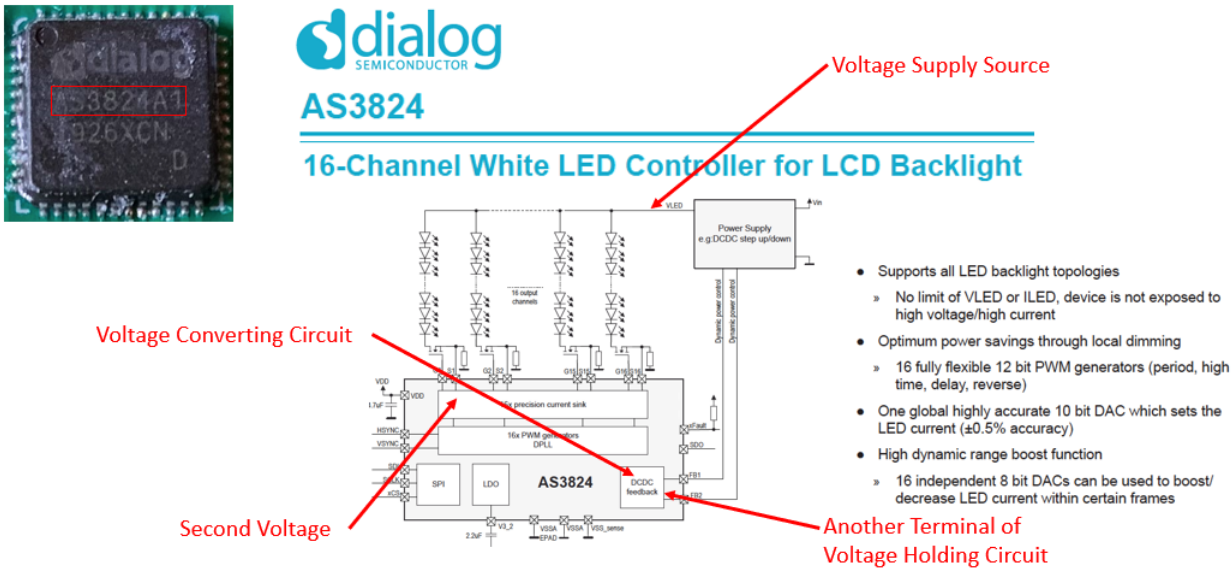

86. The products accused of infringing the ’047 patent are configured such that under said current output mode, each of said current output circuits outputs an output current according

to said voltage held in said voltage holding circuit by said voltage-current converting circuit. For example, each of the Dialog semiconductor chips in the QN55 (AS3824) is configured in such a manner. For example, the current control block converts current to voltage and holds for comparison to each channel's DAC. Documentation for chipsets in the QN55 provides evidence of this:

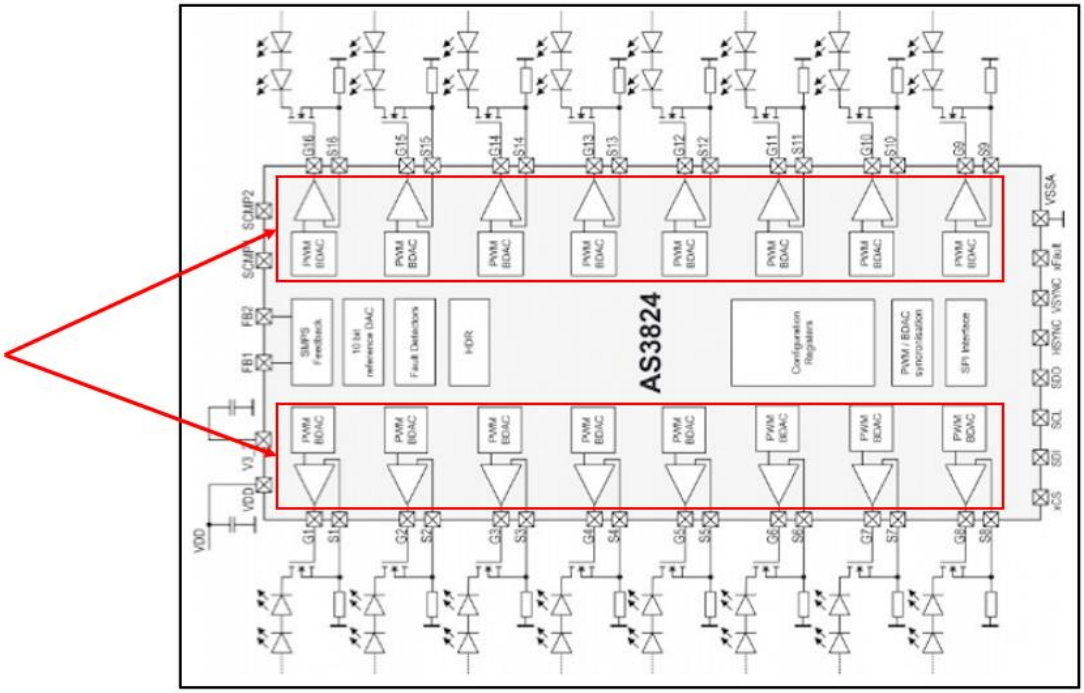

87. At a minimum, Defendants have known of the '047 patent at least as early as the service date of this original complaint. Further, on information and belief, Defendants have known of the '047 patent at least as early as the filing date of the original complaint. In addition, Defendants have known about the '047 patent since at least July 29, 2020, when Defendants received notice of its infringement.

88. Upon information and belief, despite having knowledge of the '047 patent and knowledge that it is directly and/or indirectly infringing one or more claims of the '047 patent, Defendants have nevertheless continued its infringing conduct and disregarded an objectively high

likelihood of infringement. Defendants' infringing activities relative to the '047 patent have been, and continue to be, willful, wanton, malicious, in bad-faith, deliberate, consciously wrongful, flagrant, and an egregious case of misconduct beyond typical infringement such that Plaintiff is entitled under 35 U.S.C. § 284 to enhanced damages up to three times the amount found or assessed.

INDIRECT INFRINGEMENT (35 U.S.C. §271(b))

89. Based on the information presently available to Plaintiff, Defendants have also indirectly infringed one or more claims of the '047 patent by inducing infringement, including, at least, the importation and sale of products that, as set forth above, infringe the '047 patent. For example, Defendants induce and have induced the importation and sale of products accused of infringing the '047 patent (e.g., QN55) by retailers. Further, SEC and/or SDC also induce and have induced the importation and sale of products accused of infringing the '047 patent (e.g., QN55) by SEA.

90. Defendants have known of the '047 patent and its infringement at least as early as the service date of this complaint. Further, on information and belief, Defendants have known of the '047 patent and its infringement at least as early as the filing date of the original complaint. In addition, Defendants have known about the '047 patent since at least July 29, 2020, when Defendants received notice of the '047 patent and its infringement.

91. On information and belief, despite having knowledge of the '047 patent and its infringement, Defendants specifically intended for retailers to import and sell products accused of infringing the '047 patent. Further, SEC and/or SDC specifically intended for SEA to import and sell products accused of infringing the '047 patent. On information and belief, Defendants instruct and encourage the importers to import and/or sell products accused of infringing the '047 patent.

On information and belief, the purchase and sale agreements between Defendants and the importers provide such instruction and/or encouragement. Further, on information and belief, SEA exists for inter alia, the purpose of importing and selling products accused of infringing the ’047 patent in the United States.

92. Each Defendant is liable for these infringements of the ’047 patent pursuant to 35 U.S.C. § 271.

93. Plaintiff has been damaged as a result of Defendants’ infringing conduct described in this Count. Defendants are, thus, liable to Plaintiff in an amount that adequately compensates Plaintiff for Defendants’ infringements, which, by law, cannot be less than a reasonable royalty, together with interest and costs as fixed by this Court under 35 U.S.C. § 284.

94. Plaintiff has complied with the requirements of 35 U.S.C. § 287, to the extent necessary and/or applicable, and is entitled to collect pre- and post-filing damages for Defendants’ infringements of the’047 patent.

COUNT V
(Infringement of U.S. Patent No. 8,093,830)

95. Plaintiff incorporates paragraphs 1 through 93 herein by reference.

96. This cause of action arises under the patent laws of the United States, and in particular, 35 U.S.C. §§ 271, *et seq*.

97. Plaintiff is the owner of the ’830 patent with all substantial rights to the ’830 patent including the exclusive right to enforce, sue, and recover damages for past and future infringement.

98. The ’830 patent is valid, enforceable and was duly issued in full compliance with Title 35 of the United States Code.

IPR2025-01330
BOE Technology v. Bishop Display Tech
Bishop Display's Exhibit 2008
Ex. 2008, Page 31

DIRECT INFRINGEMENT (35 U.S.C. §271(a))

99. Defendants have, and continue to, infringe one or more claims of the ’830 patent in this judicial district and elsewhere in Texas and the United States.

100. On information and belief, Defendants, either by themselves (individually and/or in concert) and/or via an agent, infringed literally, and/or under the Doctrine of Equivalents, infringe at least claim 1 of the ’830 patent by, among other things, making, using, selling, offering for sale, and/or importing products, such as televisions, that satisfy the limitations of claim 1. Further, SEC is vicariously liable for this infringing conduct of SDC and/or SEA, as well as other related Samsung entities, and affiliates, (under both the alter ego and agency theories) because, as an example and upon information and belief, SEC, SDC, and SEA are essentially the same company, and SEC has the right and ability to control SDC’s and SEA’s infringing acts and receives a direct financial benefit from SEA’s and SDC’s infringement.

101. The products accused of infringing the ’830 patent comprise a semiconductor light source driving apparatus. For example, the QN55 is a television that includes an LCD display and LCM label.

102. The products accused of infringing the ’830 patent comprise a semiconductor light source that is driven by a current. An examination of products accused of infringing the ’830 patent reveals this. For example, the QN55 includes a semiconductor light source:

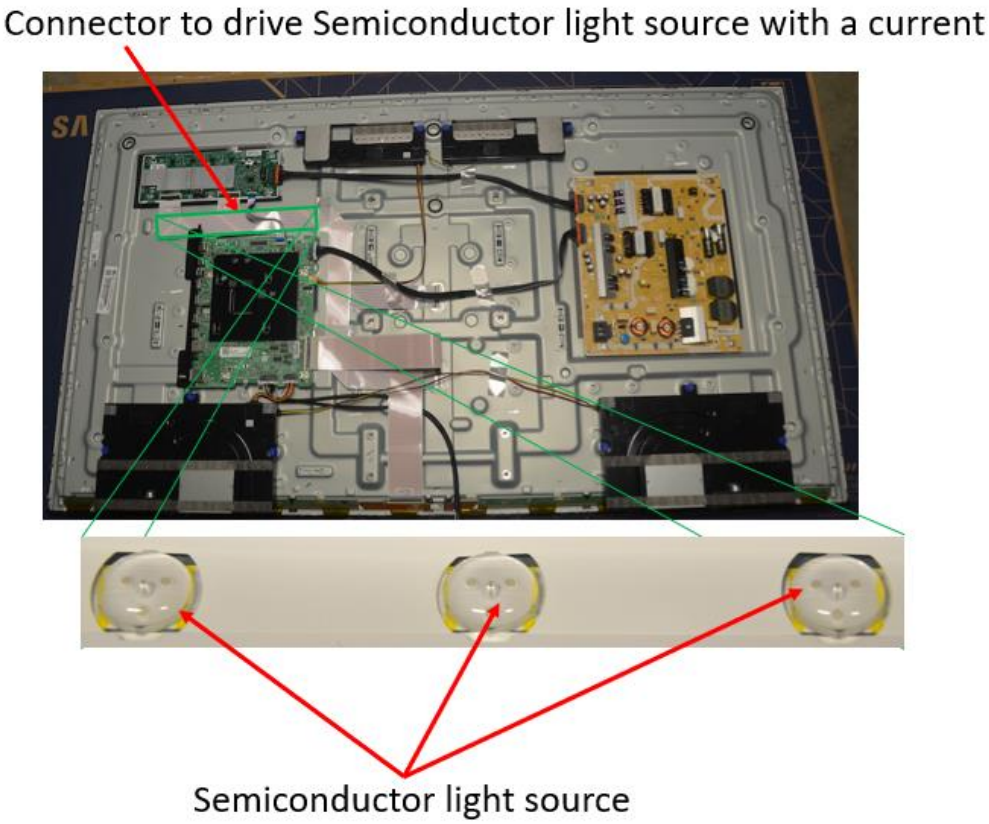

103. The products accused of infringing the ’830 patent comprise a voltage source that drives the semiconductor light source. An examination of products accused of infringing the ’830 patent reveals this. For example, the QN55 evidences this:

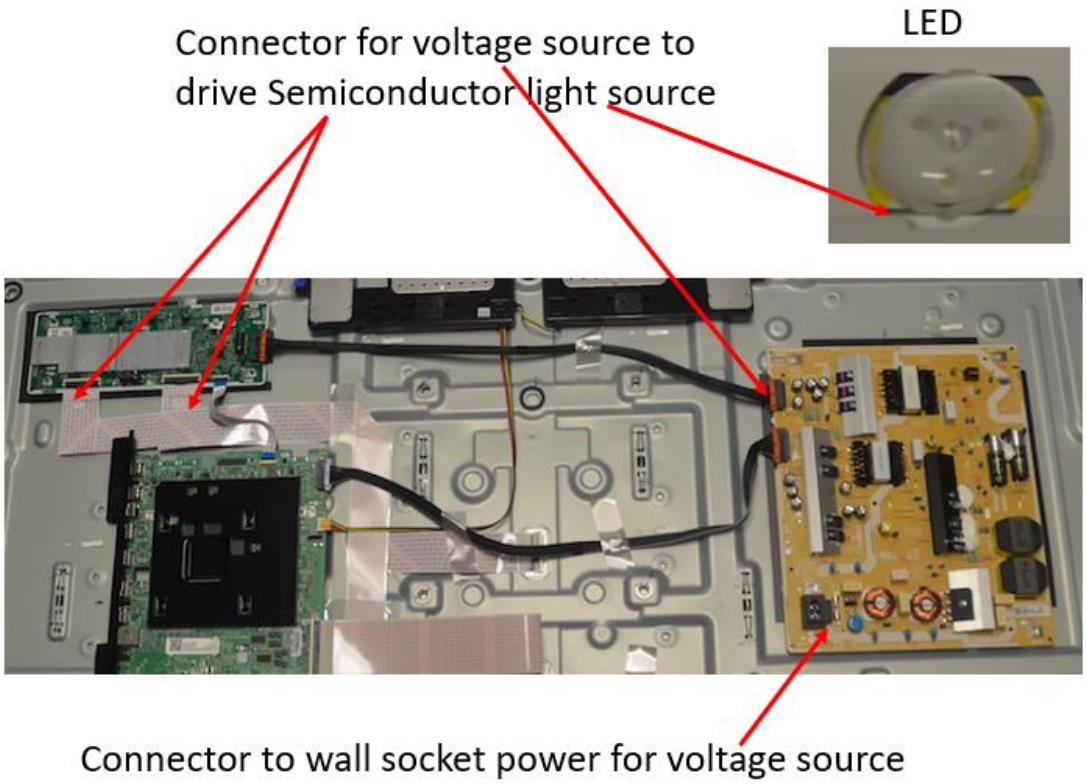

104. The products accused of infringing the ’830 patent comprise an output voltage controlling section that controls a drive current value for driving the semiconductor light source by controlling an output voltage of the voltage source. An examination of products accused of infringing the ’830 patent reveals this. For example, the QN55 evidences this:

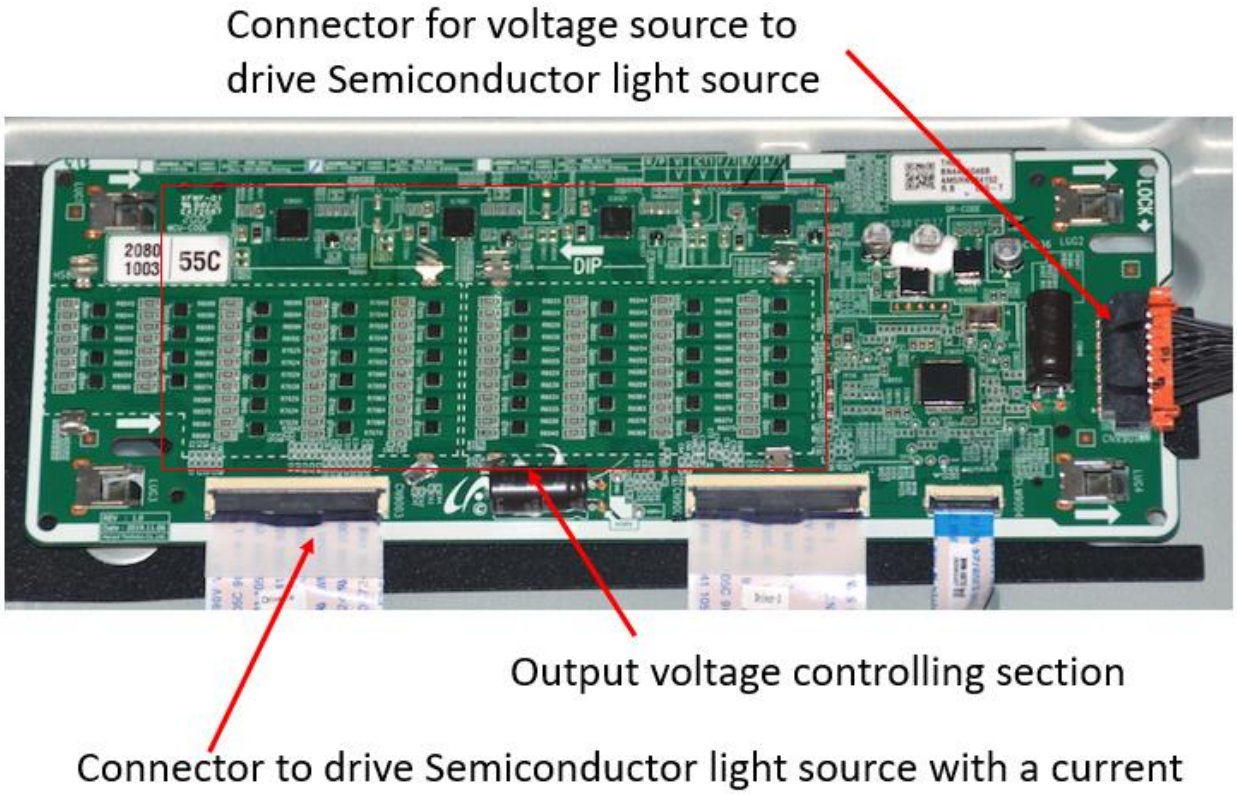

105. The products accused of infringing the ’830 patent comprise an output current detecting section that detects an output current of the semiconductor light source. An examination of products accused of infringing the ’830 patent reveals this. For example, the QN55 evidences this:

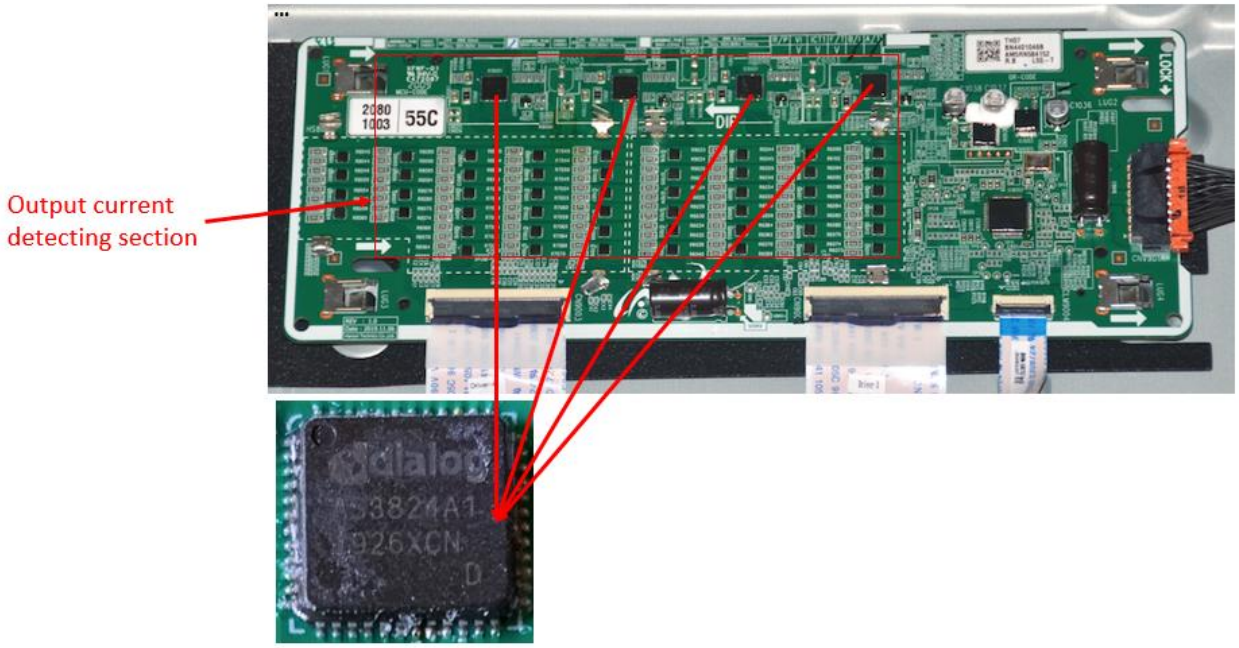

106. The products accused of infringing the ’830 patent comprise a current command section that specifies a reference value of a drive current which is applied to the semiconductor light source. An examination of products accused of infringing the ’830 patent reveals this. For example, each of the Dialog semiconductor chips in the QN55 (AS3824) is configured in such a manner. For example, the precision current sink specifies the reference value of the drive current. Documentation for chipsets in the QN55 provides evidence of this:

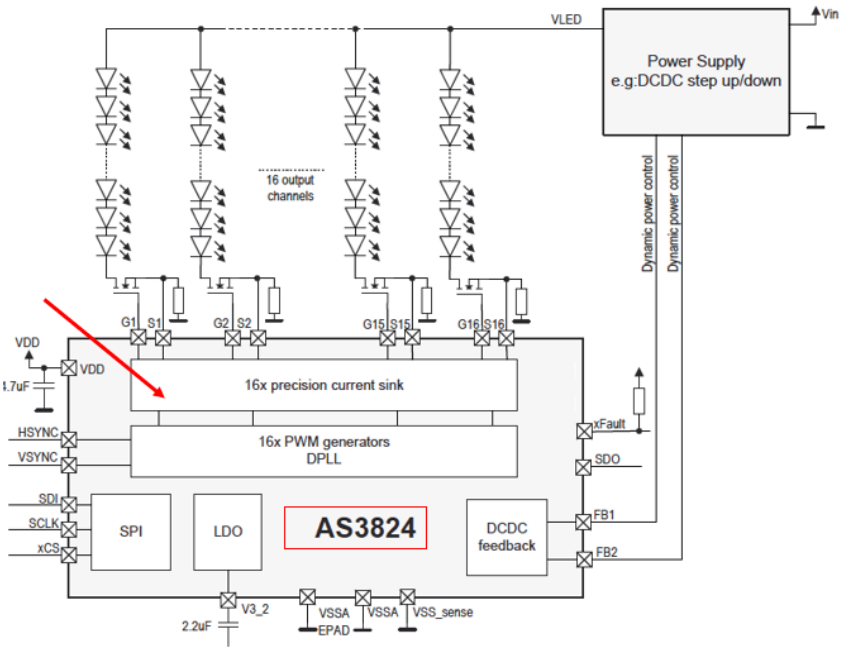

107. The products accused of infringing the ’830 patent comprise a current command section that specifies a reference value of a drive current which is applied to the semiconductor light source. An examination of products accused of infringing the ’830 patent reveals this. For example, each of the Dialog semiconductor chips in the QN55 (AS3824) is configured in such a manner and each of 16 channels has a DAC that sets a reference. Documentation for chipsets in the QN55 provides evidence of this:

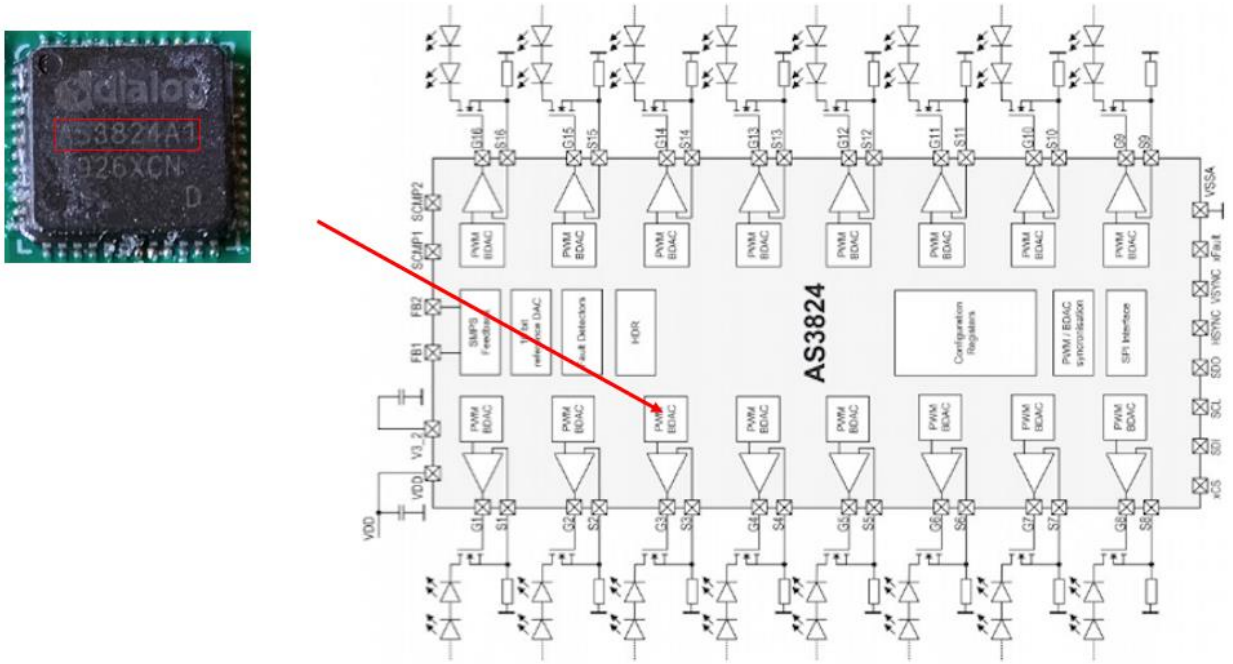

108. The products accused of infringing the ’830 patent comprise a current comparing section that compares the output current detected by the output current detecting section and the reference value specified by the current command section. An examination of products accused of infringing the ’830 patent reveals this. For example, each of the Dialog semiconductor chips in the QN55 (AS3824) is configured in such a manner and each of 16 channels has a DAC that sets a reference used in a comparator per channel. Documentation for chipsets in the QN55 provides evidence of this:

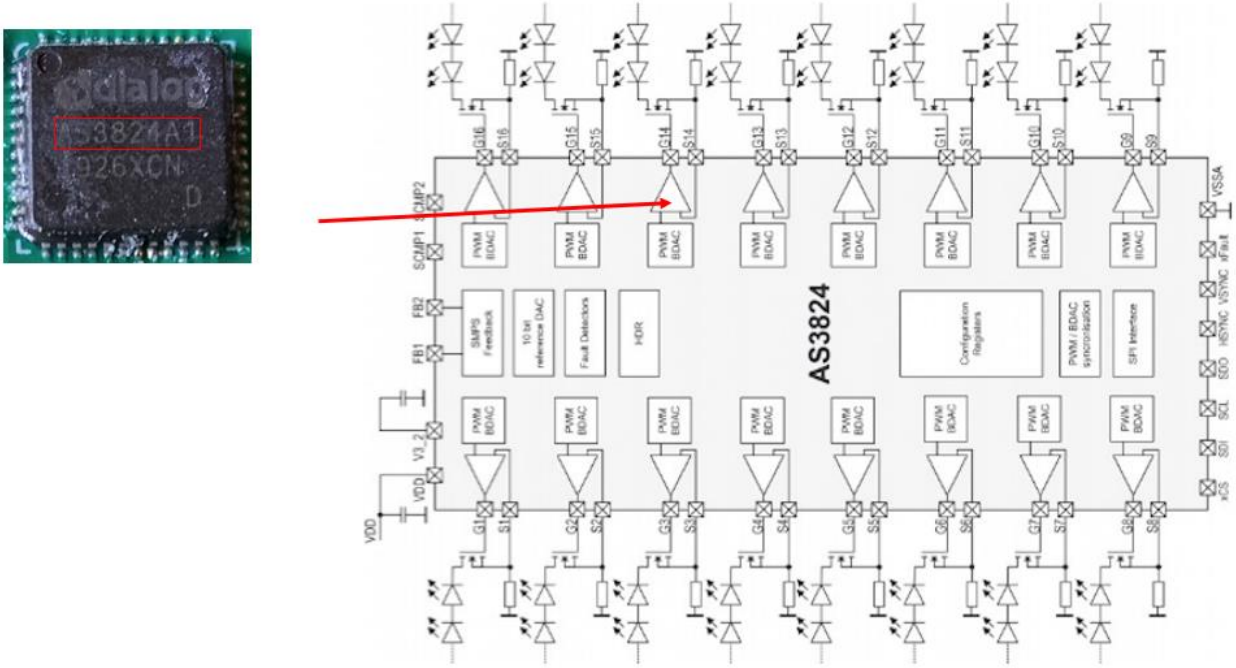

109. The products accused of infringing the ’830 patent comprise an impedance detecting section that detects an impedance of the semiconductor light source. An examination of products accused of infringing the ’830 patent reveals this. For example, each of the Dialog semiconductor chips in the QN55 (AS3824) is configured in such a manner as the inductor current is a function of the LED impedance and is detected by LED feedback. Documentation for chipsets in the QN55 provides evidence of this:

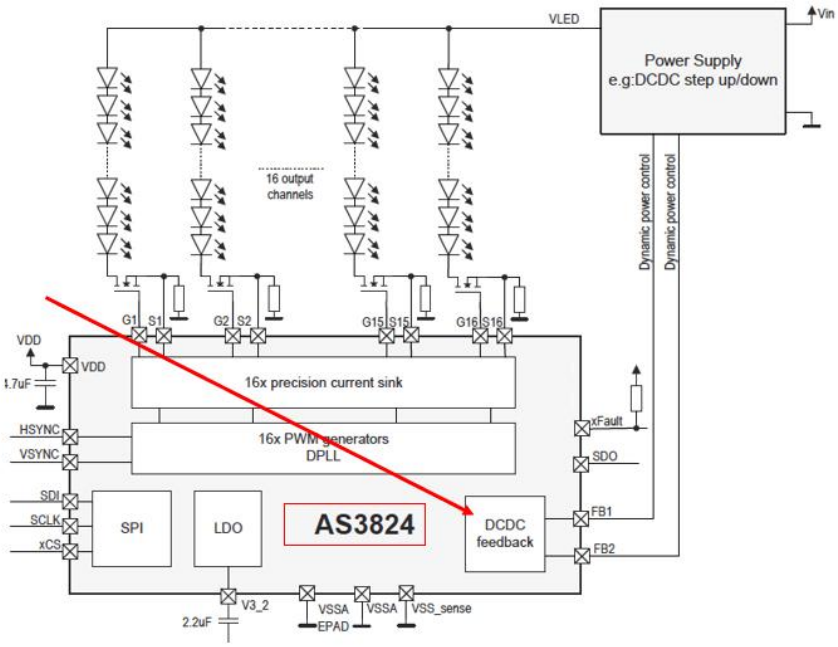

110. The products accused of infringing the ’830 patent are configured such that the output voltage controlling section controls the output voltage of the voltage source based on an output of the current comparing section and an output of the impedance detecting section. An examination of products accused of infringing the ’830 patent reveals this. For example, each of the Dialog semiconductor chips in the QN55 (AS3824) is configured in such a manner. Documentation for chipsets in the QN55 provides evidence of this:

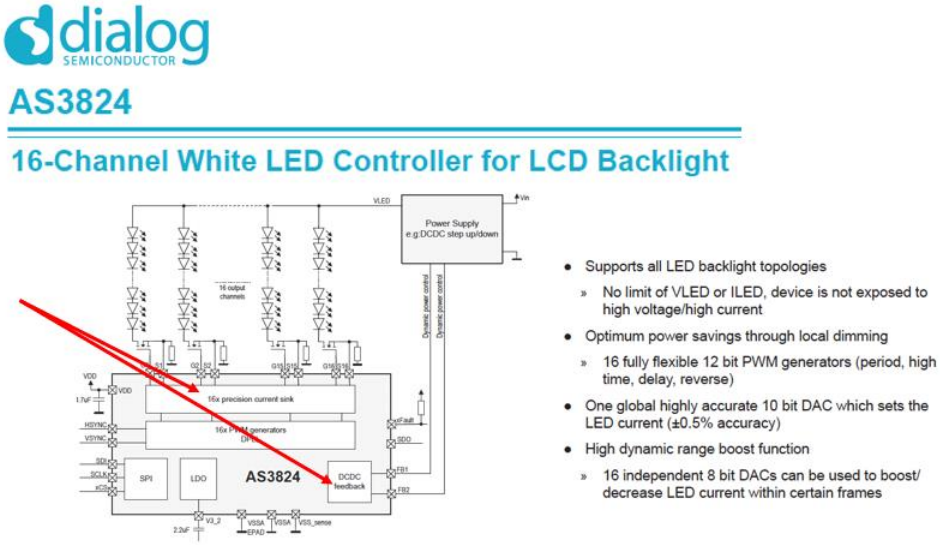

111. At a minimum, Defendants have known of the ’830 patent at least as early as the service date of this original complaint. Further, on information and belief, Defendants have known of the ’830 patent at least as early as the filing date of the original complaint. In addition, Defendants have known about the ’830 patent since at least July 29, 2020, when Defendants received notice of its infringement.

112. Upon information and belief, despite having knowledge of the ’830 patent and knowledge that it is directly and/or indirectly infringing one or more claims of the ’830 patent, Defendants have nevertheless continued its infringing conduct and disregarded an objectively high likelihood of infringement. Defendants’ infringing activities relative to the ’830 patent have been, and continue to be, willful, wanton, malicious, in bad-faith, deliberate, consciously wrongful, flagrant, and an egregious case of misconduct beyond typical infringement such that Plaintiff is entitled under 35 U.S.C. § 284 to enhanced damages up to three times the amount found or assessed.

INDIRECT INFRINGEMENT (35 U.S.C. §271(b))

113. Based on the information presently available to Plaintiff, Defendants have also indirectly infringed one or more claims of the ’830 patent by inducing infringement, including, at least, the importation and sale of products that, as set forth above, infringe the ’830 patent. For example, Defendants induce and have induced the importation and sale of products accused of infringing the ’830 patent (e.g., QN55) by retailers. Further, SEC and/or SDC also induce and have induced the importation and sale of products accused of infringing the ’830 patent (e.g., QN55) by SEA.

114. Defendants have known of the ’830 patent and its infringement at least as early as the service date of this complaint. Further, on information and belief, Defendants have known of

the ’830 patent and its infringement at least as early as the filing date of the original complaint. In addition, Defendants have known about the ’830 patent since at least July 29, 2020, when Defendants received notice of the ’830 patent and its infringement.

115. On information and belief, despite having knowledge of the ’830 patent and its infringement, Defendants specifically intended for retailers to import and sell products accused of infringing the ’830 patent. Further, SEC and/or SDC specifically intended for SEA to import and sell products accused of infringing the ’830 patent. On information and belief, Defendants instruct and encourage the importers to import and/or sell products accused of infringing the ’830 patent. On information and belief, the purchase and sale agreements between Defendants and the importers provide such instruction and/or encouragement. Further, on information and belief, SEA exists for inter alia, the purpose of importing and selling products accused of infringing the ’830 patent in the United States.

116. Each Defendant is liable for these infringements of the ’830 patent pursuant to 35 U.S.C. § 271.

117. Plaintiff has been damaged as a result of Defendants’ infringing conduct described in this Count. Defendants are, thus, liable to Plaintiff in an amount that adequately compensates Plaintiff for Defendants’ infringements, which, by law, cannot be less than a reasonable royalty, together with interest and costs as fixed by this Court under 35 U.S.C. § 284.

118. Plaintiff has complied with the requirements of 35 U.S.C. § 287, to the extent necessary and/or applicable, and is entitled to collect pre- and post-filing damages for Defendants’ infringements of the’830 patent.

COUNT VI
(Infringement of U.S. Patent No. 8,016,449)

119. Plaintiff incorporates paragraphs 1 through 117 herein by reference.

120. This cause of action arises under the patent laws of the United States, and in particular, 35 U.S.C. §§ 271, *et seq*.

121. Plaintiff is the owner of the ’449 patent with all substantial rights to the ’449 patent including the exclusive right to enforce, sue, and recover damages for past and future infringement.

122. The ’449 patent is valid, enforceable and was duly issued in full compliance with Title 35 of the United States Code.

DIRECT INFRINGEMENT (35 U.S.C. §271(a))

123. Defendants have, and continue to, infringe one or more claims of the ’449 patent in this judicial district and elsewhere in Texas and the United States.

124. On information and belief, Defendants, either by themselves (individually and/or in concert) and/or via an agent, infringed literally, and/or under the Doctrine of Equivalents, infringe at least claim 1 of the ’449 patent by, among other things, making, using, selling, offering for sale, and/or importing products, such as projectors, that satisfy the limitations of claim 1. Further, SEC is vicariously liable for this infringing conduct of SDC and/or SEA, as well as other related Samsung entities, and affiliates, (under both the alter ego and agency theories) because, as an example and upon information and belief, SEC, SDC, and SEA are essentially the same company, and SEC has the right and ability to control SDC’s and SEA’s infringing acts and receives a direct financial benefit from SEA’s and SDC’s infringement.

125. The products accused of infringing the ’449 patent comprise a surface light emitting apparatus. For example, the LSP7T is a projector that includes a surface light emitter:

IPR2025-01330
BOE Technology v. Bishop Display Tech
Bishop Display's Exhibit 2008
Ex. 2008, Page 43

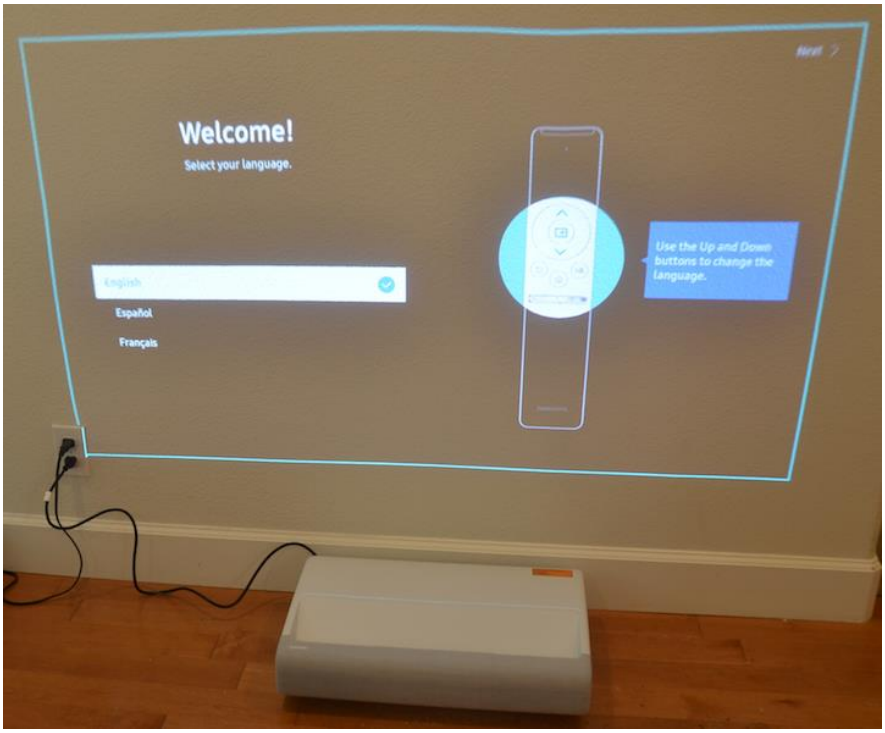

126. The products accused of infringing the ’449 patent comprise a light source section that includes at least one light source which emits a laser beam. An examination of such products reveals this. For example, the LSP7T evidences this:

Bottom of projector showing laser warning.

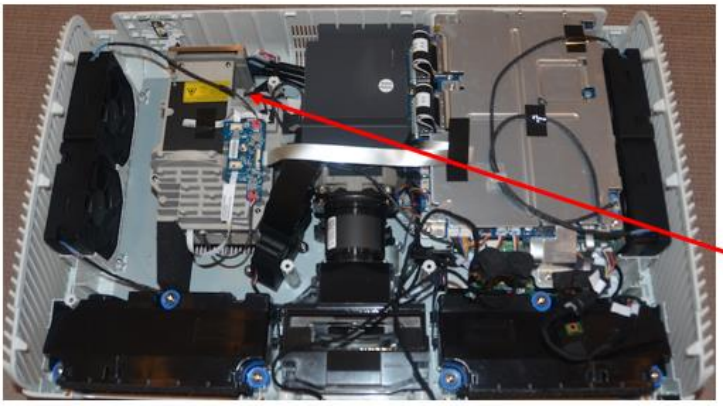

Open top of projector showing laser light source and warning label

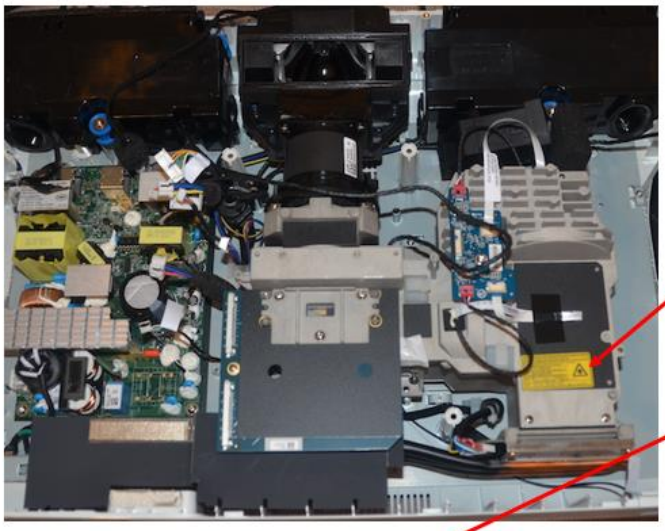

Open top of projector showing laser light source and warning label

Laser package

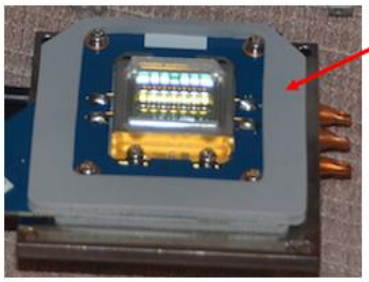

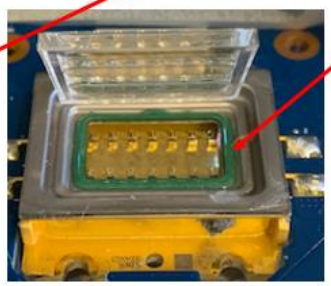

Bare lasers with optics removed

127. The products accused of infringing the ’449 patent comprise an optical guiding section that comprises an incidence Surface and a radiation Surface, guides the laser beam received at the incidence surface, and emits the guided laser beam through the radiation surface. The optical guiding section guides the laser beam through the radiation surface, as evidenced by the projection generated by the products accused of infringing the ’449 patent. An examination of such products reveals additional limitations of this claim. For example, the LSP7T evidences this:

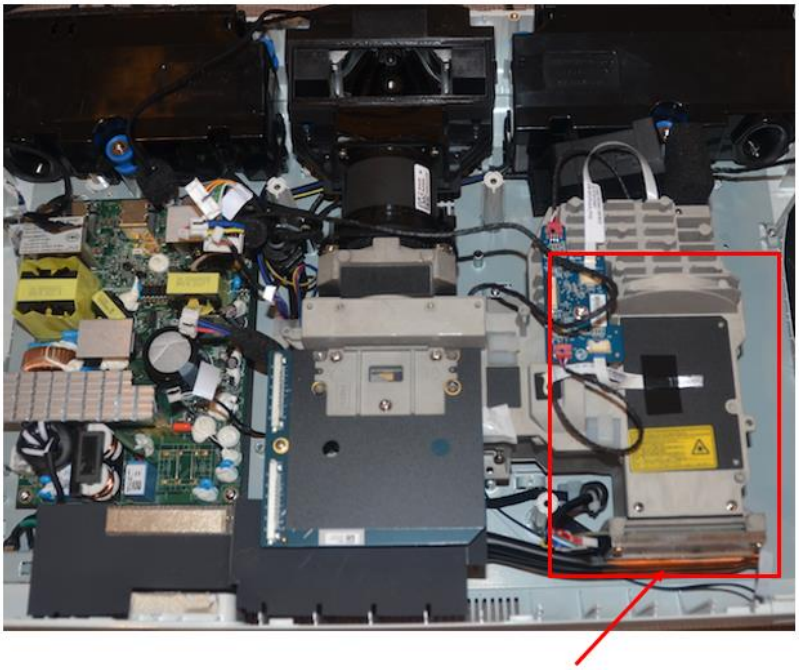

optical guiding section

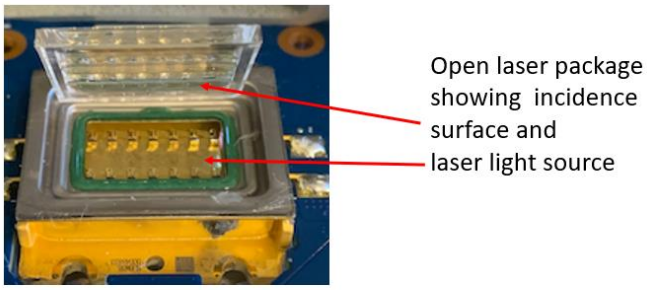

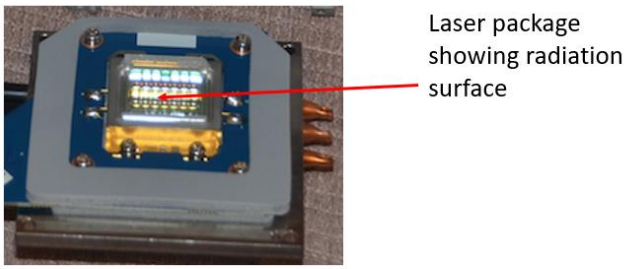

128. The products accused of infringing the ’449 patent comprise an optical element section that includes at least one beam shaping optical element configured for shaping the laser beam, the beam shaping optical element having a refractive aspheric lens, the refractive aspheric lens being configured to convert an intensity distribution of the laser beam emitted from the light source section to a more uniform intensity distribution at the incidence surface of the optical guiding section. For example, the LSP7T includes an optical element section:

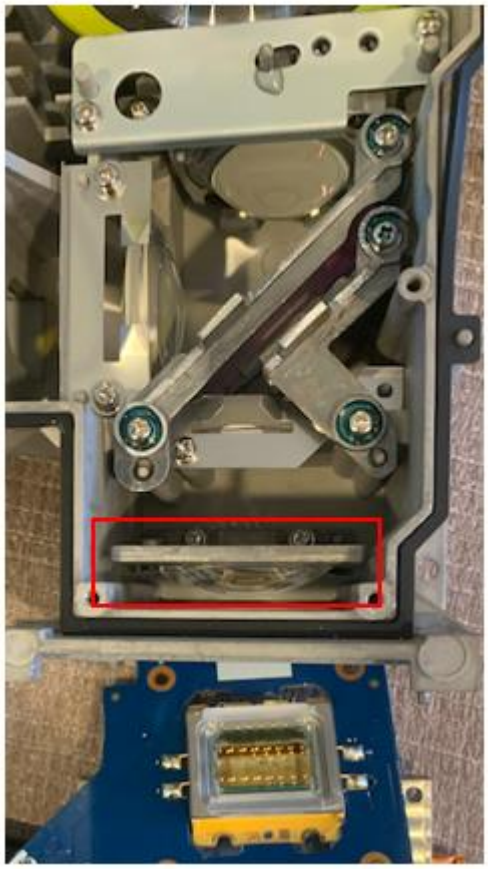

129. The section includes a beam shaping optical element having a refractive aspheric lens that is configured to convert an intensity distribution of the laser beam emitted from the light source section to a more uniform intensity distribution at the incidence surface of the optical guiding section:

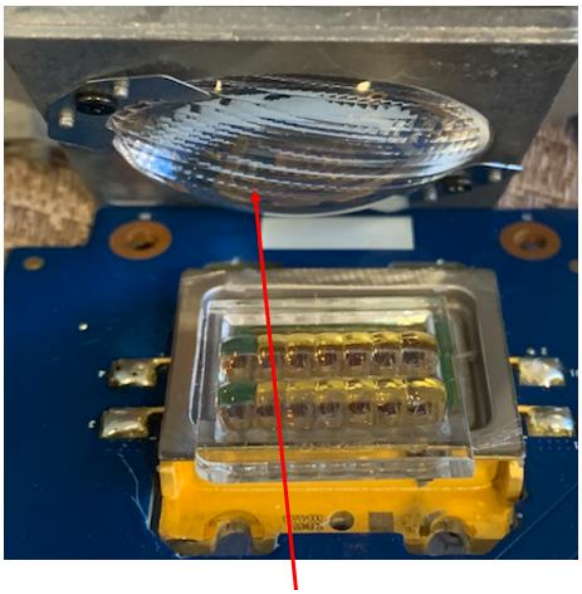

130. At a minimum, Defendants have known of the ’449 patent at least as early as the service date of this original complaint. Further, on information and belief, Defendants have known of the ’449 patent at least as early as the filing date of the original complaint.

131. Upon information and belief, despite having knowledge of the ’449 patent and knowledge that it is directly and/or indirectly infringing one or more claims of the ’449 patent, Defendants have nevertheless continued its infringing conduct and disregarded an objectively high likelihood of infringement. Defendants’ infringing activities relative to the ’449 patent have been, and continue to be, willful, wanton, malicious, in bad-faith, deliberate, consciously wrongful, flagrant, and an egregious case of misconduct beyond typical infringement such that Plaintiff is entitled under 35 U.S.C. § 284 to enhanced damages up to three times the amount found or assessed.

INDIRECT INFRINGEMENT (35 U.S.C. §271(b))

132. Based on the information presently available to Plaintiff, Defendants have also indirectly infringed one or more claims of the ’449 patent by inducing infringement, including, at least, the importation and sale of products that, as set forth above, infringe the ’449 patent. For

example, Defendants induce and have induced the importation and sale of products accused of infringing the ’449 patent (e.g., LSP7T) by retailers. Further, SEC and/or SDC also induce and have induced the importation and sale of products accused of infringing the ’449 patent (e.g., LSP7T) by SEA.

133. Defendants have known of the ’449 patent and its infringement at least as early as the service date of this complaint. Further, on information and belief, Defendants have known of the ’449 patent at least as early as the service date of this complaint. Further, on information and belief, Defendants have known of the ’449 patent at least as early as the filing date of the original complaint.

134. On information and belief, despite having knowledge of the ’449 patent and its infringement, Defendants specifically intended for retailers to import and sell products accused of infringing the ’449 patent. Further, SEC and/or SDC specifically intended for SEA to import and sell products accused of infringing the ’449 patent. On information and belief, Defendants instruct and encourage the importers to import and/or sell products accused of infringing the ’449 patent. On information and belief, the purchase and sale agreements between Defendants and the importers provide such instruction and/or encouragement. Further, on information and belief, SEA exists for inter alia, the purpose of importing and selling products accused of infringing the ’449 patent in the United States.Each Defendant is liable for these infringements of the ’449 patent pursuant to 35 U.S.C. § 271.

135. Plaintiff has been damaged as a result of Defendants’ infringing conduct described in this Count. Defendants are, thus, liable to Plaintiff in an amount that adequately compensates Plaintiff for Defendants’ infringements, which, by law, cannot be less than a reasonable royalty, together with interest and costs as fixed by this Court under 35 U.S.C. § 284.

IPR2025-01330
BOE Technology v. Bishop Display Tech
Bishop Display's Exhibit 2008
Ex. 2008, Page 50

136. Plaintiff has complied with the requirements of 35 U.S.C. § 287, to the extent necessary and/or applicable, and is entitled to collect pre- and post-filing damages for Defendants' infringements of the '449 patent.

CONCLUSION

137. Plaintiff is entitled to recover from Defendants the damages sustained by Plaintiff as a result of the Defendants' wrongful acts in an amount subject to proof at trial, which, by law, cannot be less than a reasonable royalty, together with interest and costs as fixed by this Court.

138. Plaintiff has incurred and will incur attorneys' fees, costs, and expenses in the prosecution of this action. The circumstances of this dispute may give rise to an exceptional case within the meaning of 35 U.S.C. § 285, and Plaintiff is entitled to recover its reasonable and necessary attorneys' fees, costs, and expenses.

JURY DEMAND

Plaintiff requests a trial by jury pursuant to Rule 38 of the Federal Rules of Civil Procedure.

PRAYER FOR RELIEF

Plaintiff asks that the Court find in its favor and against Defendants and that the Court grant Plaintiff the following relief:

a. Judgment that one or more claims of the Asserted Patents have been infringed, either literally and/or under the doctrine of equivalents, by Defendants;

b. Judgment that Defendants account for and pay to Plaintiff all damages and costs incurred by Plaintiff because of Defendants' infringing activities and other conduct complained of herein, including an accounting for any sales or damages not presented at trial;

c. Judgment that Defendants account for and pay to Plaintiff a reasonable, ongoing, post judgment royalty because of Defendants' infringing activities, including continuing infringing activities, and other conduct complained of herein;

IPR2025-01330
BOE Technology v. Bishop Display Tech
Bishop Display's Exhibit 2008
Ex. 2008, Page 51

d. That Plaintiff be granted pre-judgment and post judgment interest on the damages caused by Defendants' infringing activities and other conduct complained of herein;

e. Find this case exceptional under the provisions of 35 U.S.C. § 285 and award enhanced damages; and

f. That Plaintiff be granted such other and further relief as the Court may deem just and proper under the circumstances.

Dated: April 20, 2021

Respectfully submitted,

/s/ *Jonathan H. Rastegar*
Patrick J. Conroy
Texas Bar No. 24012448
Justin Kimble
Texas Bar No. 24036909
T. William Kennedy Jr.
Texas Bar No. 24055771
Jon Rastegar
Texas Bar No. 24064043
Ryan Griffin
Texas Bar No. 24053687
Nelson Bumgardner Albritton PC
3131 W 7th St
Suite #300
Fort Worth, TX 76107
Tel: (817) 377-9111
pat@nbafirm.com
justin@nbafirm.com
bill@nbafirm.com
jon@nbafirm.com
ryan@nbafirm.com

Attorneys for Plaintiff
BISHOP DISPLAY TECH LLC

IPR2025-01330
BOE Technology v. Bishop Display Tech
Bishop Display's Exhibit 2008
Ex. 2008, Page 52