IN THE UNITED STATES DISTRICT COURT
FOR THE EASTERN DISTRICT OF TEXAS
(MARSHALL DIVISION)

BISHOP DISPLAY TECH LLC,	§	
	§	
Plaintiff,	§	
	§	**C.A. No. 2:22-cv-385**
v.	§	
	§	**JURY TRIAL DEMANDED**
INNOLUX CORPORATION,	§	
	§	
Defendant.	§	
	§	
	§	

PLAINTIFF'S ORIGINAL COMPLAINT FOR PATENT INFRINGEMENT

Plaintiff Bishop Display Tech LLC ("Bishop" or "Plaintiff") files this Original Complaint against Defendant Innolux Corporation ("Innolux" or "Defendant") for infringement of U.S. Patent No. 6,819,377 (the "'377 patent"), U.S. Patent No. 6,822,706 (the "'706 patent"), U.S. Patent No. 7,583,347 (the "'347 patent"), U.S. Patent No. 7,995,047 (the "'047 patent"), U.S. Patent No. 8,093,830 (the "'830 patent"), and U.S. Patent No. 7,414,682 (the "'682 patent") (collectively, the "Asserted Patents").

THE PARTIES

1. Plaintiff is a Texas limited liability company with its principal place of business in the Eastern District of Texas.

2. On information and belief, Innolux was organized on January 14, 2003, under the Act for Establishment and Administration of Science Parks in the Republic of China (R.O.C.). Innolux was listed on the Taiwan Stock Exchange Corporation (the "TSEC") in October 2006. Innolux merged with TPO Displays Corporation and Chi Mei Optoelectronics Corporation on March 18, 2010, with Innolux as the surviving entity.

IPR2025-01330
BOE Technology v. Bishop Display Tech
Bishop Display's Exhibit 2009
Ex. 2009, Page 1

3. On information and belief, Innolux is a multi-national corporation organized under the laws of the Republic of China, with its principal place of business located at No.160, Kesyue Road, Jhunan Science Park, Miaoli County 35053, Taiwan. Innolux does business in the State of Texas and in the Eastern District of Texas.

4. Innolux is engaged in making, using, selling, offering for sale, and/or importing, and/or induces its subsidiaries, affiliates, distributors, retail partners, and customers in the making, using, selling, offering for sale, and/or importing throughout the United States, including within this District, TFT-LCD (thin-film transistor – liquid crystal display) panels and modules ("TFT-LCDs") and power supply boards (collectively, the "Accused Products") accused of infringement. On information and belief, Innolux, along with other foreign and U.S.-based subsidiaries, affiliates, distributors, retail partners, and customers (which act as part of a global network of overseas sales and manufacturing subsidiaries on behalf of Innolux), have operated as agents of one another and vicariously as parts of the same business group to work in concert together and enter into agreements that are nearer than arm's length to provide a distribution channel of infringing products within this District and the U.S. nationally.

5. On information and belief, Innolux operates in agency with others, including its foreign and U.S.-based subsidiaries, affiliates, distributors, retail partners, and customers. *See, e.g.*, https://www.innolux.com/en/product-and-tech/global_service.html ("Global Service - Innolux actively deploys global R&D, manufacturing, sales, logistics and service bases to serve its global customers with LCD displays in a timely manner and to provide the most valuable solutions. Innolux's first and foremost operating principle is to satisfy its customers. … Our Mission - Innolux strives to provide instant, transparent, one-stop and flexible global services, as well as to achieve full customer satisfaction. Global Service Guarantee System - Innolux puts customer satisfaction

as its priority and actively develops global logistics and service systems to properly integrate information flow with work flow, aiming to meet the ever-increasing demand for after-sales services and global logistics information."). Innolux is engaged in making, using, selling, offering for sale, and/or importing, and/or induces its subsidiaries, affiliates, distributors, retail partners, and customers in the making, using, selling, offering for sale, and/or importing throughout the United States, including within this District, the Accused Products. Innolux operates in agency with others, including its foreign and U.S.-based subsidiaries, affiliates, distributors, retail partners, and customers, to provide a distribution channel of infringing products within this District and the U.S. nationally. Innolux, itself and between and amongst its agents and foreign and U.S.-based subsidiaries, affiliates, distributors, retail partners, and customers, purposefully direct the Accused Products into established distribution channels within this District and the U.S. nationally.

6. On information and belief, Innolux maintains a corporate presence in the United States via at least its, U.S.-based sales and distribution subsidiaries including, InnoCare Optoelectronics USA, Inc. ("InnoCare") with a place of business at 101 Metro Drive, Suite 510, San Jose, CA 95110) and Innolux USA, Inc. ("INXUSA") with a place of business at 101 Metro Drive, Suite 510, San Jose, CA 95110).

7. Upon information and belief, Innolux controls each of the wholly-owned subsidiaries listed above, as well as many other subsidiaries. On information and belief, InnoCare and INXUSA provide sales, distribution, research, and development support in the United States for their parent Innolux, which wholly owns InnoCare and INXUSA. InnoCare and INXUSA are agents of Innolux. At the direction and control of Innolux, U.S.-based sales and distribution subsidiaries including, InnoCare and INXUSA, have imported and continue to import infringing TFT-LCDs and power supply boards into the United States and this District.

8. On information and belief, Innolux and its U.S.-based sales subsidiaries, affiliates, distributors, retail partners, and customers (which act as part of a global network of overseas sales and manufacturing subsidiaries on behalf of Innolux) have operated as agents of one another and vicariously as parts of the same business group to work in concert together and enter into agreements that are nearer than arm's length. For example, Innolux, alone and via at least the activities of its U.S.-based sales subsidiaries (e.g., Innocare and INXUSA), conducts business in the United States, including importing, distributing, and selling TFT-LCDs and power supply boards (i.e., the Accused Products) that incorporate devices, systems, and processes that infringe the Asserted Patents in Texas and this judicial district. *See Trois v. Apple Tree Auction Center, Inc.*, 882 F.3d 485, 490 (5th Cir. 2018) ("A defendant may be subject to personal jurisdiction because of the activities of its agent within the forum state…."); *see also Cephalon, Inc. v. Watson Pharmaceuticals, Inc.*, 629 F. Supp. 2d 338, 348 (D. Del. 2009) ("The agency theory may be applied not only to parents and subsidiaries, but also to companies that are 'two arms of the same business group,' operate in concert with each other, and enter into agreements with each other that are nearer than arm's length.").

9. Through offers to sell, sales, imports, distributions, and other related agreements to transfer ownership of Innolux's Accused Products to affiliates, distributors, retail partners, and customers operating in and maintaining a significant business presence in the U.S. and/or through its U.S. subsidiaries (e.g., Innocare and INXUSA), Innolux does business in the U.S., the state of Texas, and in the Eastern District of Texas.

JURISDICTION AND VENUE

10. This action arises under the patent laws of the United States, namely 35 U.S.C. §§ 271, 281, and 284-285, among others.

11. This Court has subject matter jurisdiction pursuant to 28 U.S.C. §§ 1331 and 1338(a).

12. Venue is proper in this judicial district pursuant to 28 U.S.C. §§ 1391(c). The Defendant is a foreign entity and may be sued in any judicial district under 28 U.S.C. § 1391(c)(3).

13. This Court has general and specific personal jurisdiction over the Defendant pursuant to due process and/or the Texas Long Arm Statute because, inter alia, (i) the Defendant has done and continues to do business in Texas and (ii) the Defendant has, directly and through intermediaries, committed and continues to commit acts of patent infringement in the State of Texas, including making, using, offering to sell, and/or selling Accused Products in Texas, and/or importing Accused Products into Texas, including by Internet sales and sales via retail and wholesale stores, inducing others to commit acts of patent infringement in Texas, and/or committing a least a portion of any other infringements alleged herein. Defendant has placed, and is continuing to place, infringing products into the stream of commerce, via an established distribution channel, with the knowledge and/or understanding that such products are sold in Texas, including in this District. Defendant has derived substantial revenues from its infringing acts occurring within Texas and within this District. Defendant has substantial business in this State and judicial district, including: (A) conducting at least part of its infringing activities alleged herein; and (B) regularly doing or soliciting business, engaging in other persistent conduct, and/or deriving substantial revenue from infringing goods offered for sale, sold, and imported, and services provided to Texas residents vicariously through and/or in concert with its alter egos, intermediaries, agents, distributors, importers, customers, subsidiaries, and/or consumers. For example, Innolux has and continues to have "delivery hubs in major cities in Asia, Europe, and America, so that [it] can achieve 'deliver just in time' object and strengthen the long term

cooperative relationship with customers." 2016 Annual Report (*available at* https://www.innolux.com/Uploads/22/2016_Annual_Report_E_478522.pdf) at 79; 2021 Annual Report (*available at* https://www.innolux.com/Uploads/22/群創_110年報英文版_0945b2.pdf) at 105. The 2016 Annual Report and 2021 Annual Report further note that "[g]iven that the business of the Company covers the entire world and the size mix of panels is complete, the Company is a comprehensive LCD provider." 2016 Annual Report at 68; 2021 Annual Report at 89.

14. This Court has personal jurisdiction over Defendant, directly or through intermediaries, distributors, importers, customers, subsidiaries, and/or consumers including its U.S.-based sales subsidiaries, which are wholly owned by Defendant. Through direction and control of such subsidiaries, affiliates, distributors, retail partners, and customers, Defendant has committed acts of direct and/or indirect patent infringement within Texas, and elsewhere within the United States, giving rise to this action and/or has established minimum contacts with Texas such that personal jurisdiction over Defendant would not offend traditional notions of fair play and substantial justice. Upon information and belief, Innolux compensates its U.S.-based subsidiaries for their sales support services in the United States. As such, Innolux has a direct financial interest in its U.S.-based subsidiaries, and vice versa.

15. Personal jurisdiction is proper because Defendant has committed acts of infringement in this District. This Court has personal jurisdiction over Defendant because, *inter alia*, this action arises from activities Defendant purposefully directed towards the State of Texas and this District.

16. Exercising personal jurisdiction over Defendant in this District would not be unreasonable given Defendant's contacts in this District, the interest in this District of resolving

disputes related to products sold herein, and the harm that would occur to Plaintiff who resides in this District.

17. In addition, Defendant has knowingly induced and continues to knowingly induce infringement within this District by advertising, marketing, offering for sale and/or selling devices pre-loaded with infringing functionality within this District, to consumers, customers, manufacturers, distributors, resellers, partners, and/or end users, and providing instructions, user manuals, advertising, and/or marketing materials which facilitate, direct or encourage the use of infringing functionality with knowledge thereof.

18. Personal jurisdiction also exists specifically over Defendant because Defendant, directly or through affiliates, subsidiaries, agents, or intermediaries, transacts business in this State or purposefully directed at this State by making, importing, offering to sell, selling, and/or having sold infringing products within this State and District or purposefully directed at this State or District.

19. Personal jurisdiction also exists specifically because Defendant and its U.S.-based subsidiaries have overlapping executives, interlocking corporate structures, and close relationships as manufacturer, importer, and distributor of the products accused of infringement.

20. To the extent the foreign Defendant is not subject to jurisdiction in any state's court of general jurisdiction, exercising jurisdiction over Defendant in this State and this District would be consistent with due process and this State's long-arm statute and under national contacts in light of the facts alleged in this Complaint.

21. In addition, Defendant, directly or through affiliates, subsidiaries, agents, or intermediaries, has placed and continues to place infringing products into the stream of commerce knowing they will be sold and used in Texas, and economically benefits from the retail sale of

infringing products in this State, including in this District. In 2016, Innolux reported 11,582,252,000 NT$ in sales to "America." 2016 Annual Report at 76. In 2021, Innolux reported 40,031,179,000 NT$ in sales to "America." 2021 Annual Report at 101.

22. Innolux has advertised and continues to advertise its infringing products to customers in Texas and this District through its website. *See, e.g.*, https://www.innolux.com/en/product-and-tech.html ("[Innolux] has become a leader in the global TFT-LCD market", where Innolux advertises TFT-LCDs accused of infringement for TVs, PIDs, monitors, notebooks, industrial display devices, smart medical devices, automotive displays, tablets, smart phones, and consumer electronics).

23. On information and belief, Innolux controls or otherwise directs and authorizes all activities of its U.S.-based sales and distribution subsidiaries. Such directed and authorized activities include, the U.S.-based subsidiaries' using, offering for sale, selling, and/or importing the Accused Products, their components, processes, and/or products containing the same that incorporate the fundamental technologies covered by the Asserted Patents. The Defendant's U.S.-based sales and distribution subsidiaries are authorized to import, distribute, sell, or offer for sale the Accused Products on behalf of Defendant. For example, Innolux researches, designs, develops, and manufactures the Accused Products, and then directs its U.S.-based sales subsidiaries to import, distribute, offer for sale, and sell the Accused Products in the United States. *See, e.g., United States v. Hui Hsiung*, 778 F.3d 738, 743 (9th Cir. 2015) (finding that the sale of infringing products to third parties rather than for direct import into the U.S. did not "place [defendants'] conduct beyond the reach of United States law [or] escape culpability under the rubric of extraterritoriality"). Furthermore, Innolux and/or it's U.S.-based sales subsidiaries also administer requests for service under and any disputes arising from Defendant's limited warranty of the

Accused Products sold in the U.S., including in Texas and this judicial district. *See, e.g.*, https://www.innolux.com/Uploads/HomeCustomer/INNOLUX%20TERMS%20AND%20CONDITIONS%20OF%20SALES_5884df.pdf. Thus, Defendant conducts infringing activities, and Defendant's U.S.-based sales subsidiaries conduct infringing activities on behalf of Defendant.

24. On information and belief, Defendant's U.S.-based sales and distribution subsidiaries' corporate presence in the United States gives Innolux substantially the same business advantages that it would have enjoyed if it conducted its business through its own offices or paid agents in the state. Defendant's U.S.-based sales subsidiaries are authorized to import, distribute, sell, and offer for sale Defendant's products, including Defendant's Accused Products, as well as their components and processes related to the same, on behalf of Defendant. For example, Defendant's U.S.-based sales subsidiaries operate within Defendant's global network of sales subsidiaries. In the U.S., including within the Eastern District of Texas, Defendant's Accused Products, as well as their components and processes related to the same, are imported, distributed, offered for sale, and/or sold.

25. Via Defendant's alter egos, agents, intermediaries, distributors, importers, customers, subsidiaries, and/or consumers maintaining a business presence, operating in, and/or residing in the U.S., Defendant's products, including products and processes accused of infringing the Asserted Patents, are or have been widely distributed and sold in Texas including within this judicial district. *See Litecubes, LLC v. Northern Light Products, Inc.*, 523 F.3d 1353, 1369-70 (Fed. Cir. 2008) ("[T]he sale [for purposes of § 271] occurred at the location of the buyer."); *see also Semcon IP Inc. v. Kyocera Corp.*, No. 2:18-cv-00197-JRG, 2019 WL 1979930, at *3 (E.D. Tex. May 3, 2019) (denying accused infringer's motion to dismiss because plaintiff sufficiently

plead that purchases of infringing products outside of the United States for importation into and sales to customers in the U.S. may constitute an offer to sell under § 271(a)).

26. On information and belief, Innolux has placed and continues to place infringing products and/or products that practice infringing processes into the stream of commerce via established distribution channels comprising at least subsidiaries and distributors, such as Innocare and INXUSA, and its customers, with the knowledge and/or intent that those products are and/or will be imported, used, offered for sale, sold, and continue to be sold in the United States and Texas, including in this District. As a result, Innolux has, vicariously through and/or in concert with its alter egos, agents, intermediaries, distributors, importers, customers, subsidiaries, and/or consumers, placed the Accused Products into the stream of commerce via established distribution channels with the knowledge and/or intent that those products were sold and continue to be sold in the United States and Texas, including in this District.

27. In the alternative, the Court has personal jurisdiction over Defendant under Federal Rule of Civil Procedure 4(k)(2), because the claims for patent infringement in this action arise under federal law, Defendant is not subject to the jurisdiction of the courts of general jurisdiction of any state and exercising jurisdiction over Defendant is consistent with the U.S. Constitution.

28. Venue is proper in this judicial district pursuant to 28 U.S.C. § 1391 because, among other things, Defendant is not a resident in the United States, and thus may be sued in any judicial district, including this one, pursuant to 28 U.S.C. § 1391(c)(3). *See In re HTC Corp.*, 889 F.3d 1349, 1357 (Fed. Cir. 2018) ("The Court's recent decision in *TC Heartland* does not alter" the alien-venue rule.).

COUNT I
(Infringement of U.S. Patent No. 6,819,377)

29. Plaintiff incorporates paragraphs 1 through 28 herein by reference.

30. This cause of action arises under the patent laws of the United States, and in particular, 35 U.S.C. §§ 271, *et seq*.

31. Plaintiff is the owner of the ’377 patent with all substantial rights to the ’377 patent including the exclusive right to enforce, sue, and recover damages for past infringement.

32. The ’377 patent is valid, enforceable and was duly issued in full compliance with Title 35 of the United States Code.

DIRECT INFRINGEMENT (35 U.S.C. §271(a))

33. Defendant has and continues to infringe literally, and/or under the Doctrine of Equivalents, one or more claims of the ’377 patent in this judicial district and elsewhere in Texas and the United States.

34. Innolux directly infringes the ’377 patent via 35 U.S.C. § 271(a) by making, offering for sale, using, testing, selling, and/or importing those Accused Products, their components and processes, and/or products containing the same that incorporate the fundamental technologies covered by the ’377 patent. For example, Innolux directly infringes the ’377 patent by offering for sale, selling, and/or importing those Accused Products, their components and processes, and/or products containing the same that incorporate the fundamental technologies covered by the ’377 patent, to its alter egos, agents, intermediaries, distributors, importers, customers, subsidiaries, and/or consumers. Furthermore, on information and belief, Innolux sells and makes the Accused Products outside of the United States, delivers those products to its customers, distributors, and/or subsidiaries in the United States, or in the case that it delivers the Accused Products outside of the United States it does so intending and/or knowing that those products are destined for the United States and/or designing those products for sale in the United States, thereby directly infringing the ’377 patent. *See, e.g., Lake Cherokee Hard Drive Techs.,*

L.L.C. v. Marvell Semiconductor, Inc., 964 F. Supp. 2d 653, 658 (E.D. Tex. 2013). Furthermore, Innolux directly infringes the ’377 patent through its direct involvement in the activities of its subsidiaries, including Innocare and INXUSA, including by selling and offering for sale the Accused Products directly to such subsidiaries and importing the Accused Products into the United States for such subsidiaries. Such subsidiaries conduct activities that constitute direct infringement of the ’377 patent under 35 U.S.C. § 271(a) by making, using, testing, offering for sale, selling, and/or importing those Accused Products. On information and belief, Innolux offers for sale, sells, and imports the Accused Products within the U.S. to, for example, its distributors, customers, subsidiaries, importers, and/or consumers. Further, Innolux is vicariously liable for this infringing conduct of its U.S.-based subsidiaries, e.g., Innocare and INXUSA, (under both the alter ego and agency theories) because, as an example and on information and belief, Innolux and its U.S.-based subsidiaries are essentially the same company, and Innolux has the right and ability to control its subsidiaries infringing acts and receives a direct financial benefit from the infringement of its U.S.-based subsidiaries, e.g., Innocare and INXUSA

35. For example, Innolux infringes claim 1 of the ’377 patent. The products accused of infringing the ’377 patent comprise a liquid crystal display device. Innolux’s TFT-LCD model no. V236BJ1-D03, which is used in products such as the Vizio TV model number D24h – J09, includes an LCD display and LCM label.

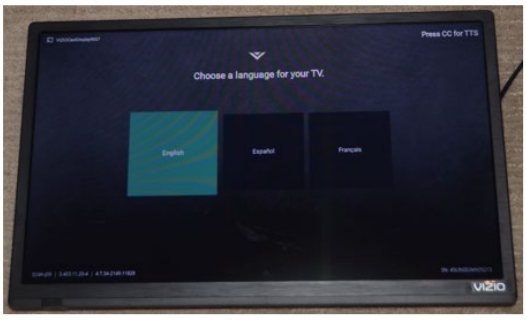

LCM label

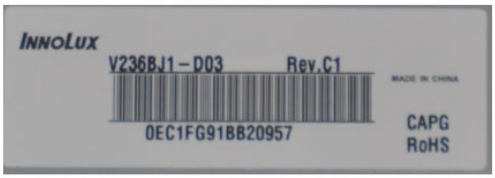

36. The products accused of infringing the ’377 patent comprise a liquid crystal panel comprising liquid crystal cells, a first plate disposed on a displaying side of the cells, and a second plate disposed on a reverse side of the cells. For example, an examination of Innolux’s TFT-LCD model no. V236BJ1-D03 demonstrates this as shown in the below paragraphs:

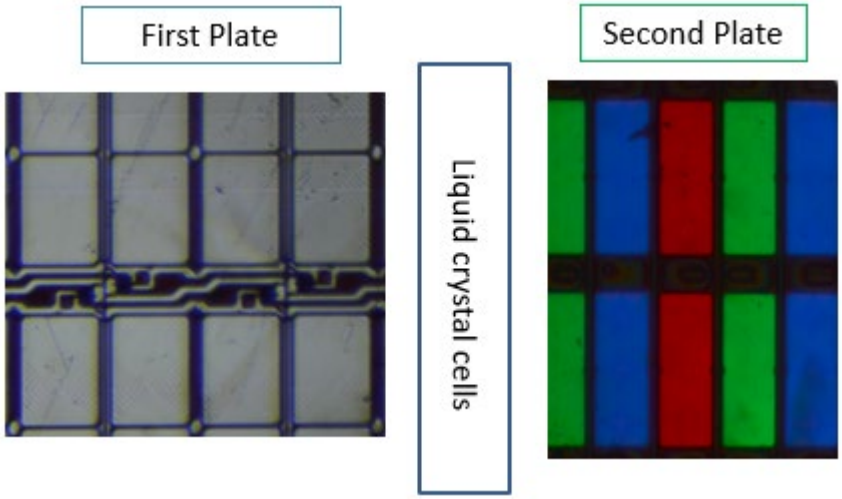

37. The products accused of infringing the ’377 patent comprise a liquid crystal driver electrically connected with the liquid crystal panel through a circuit pattern. An examination of Innolux’s TFT-LCD model no. V236BJ1-D03 demonstrates this:

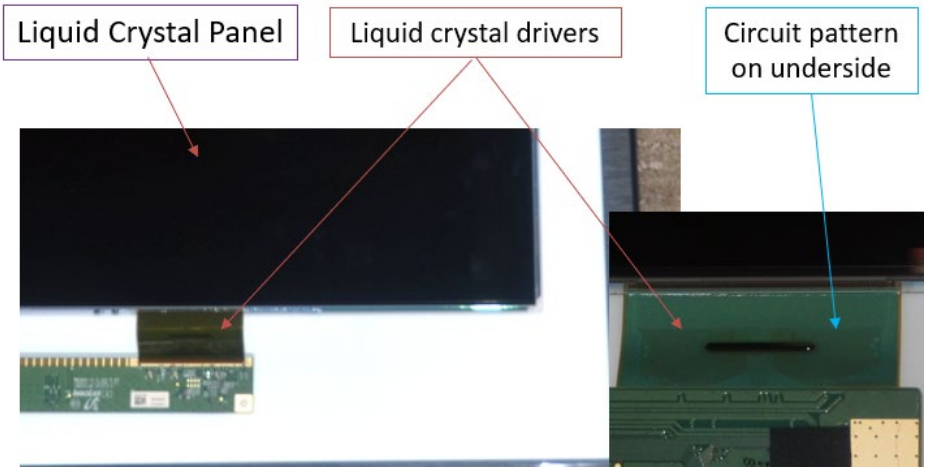

38. The products accused of infringing the ’377 patent comprise a light shielding material disposed adjacent said liquid crystal driver so as to prevent an outer light from being incident to said liquid crystal driver. An examination of Innolux’s TFT-LCD model no. V236BJ1-D03 demonstrates this:

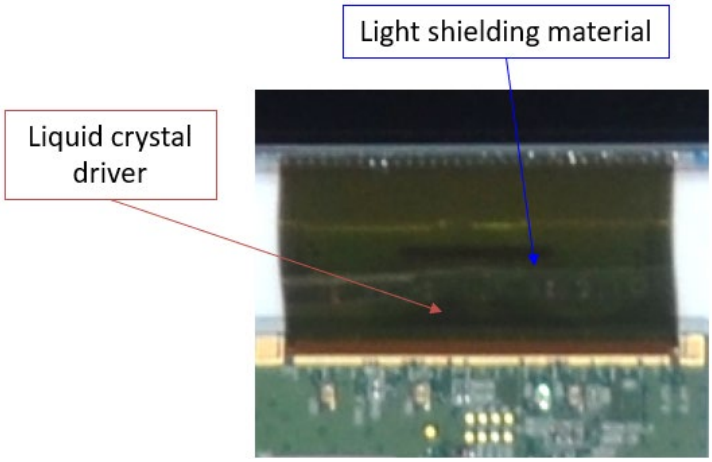

39. The products accused of infringing the ’377 patent comprise a film carrier comprising said circuit pattern formed on a resin film. An examination of Innolux’s TFT-LCD model no. V236BJ1-D03 demonstrates this:

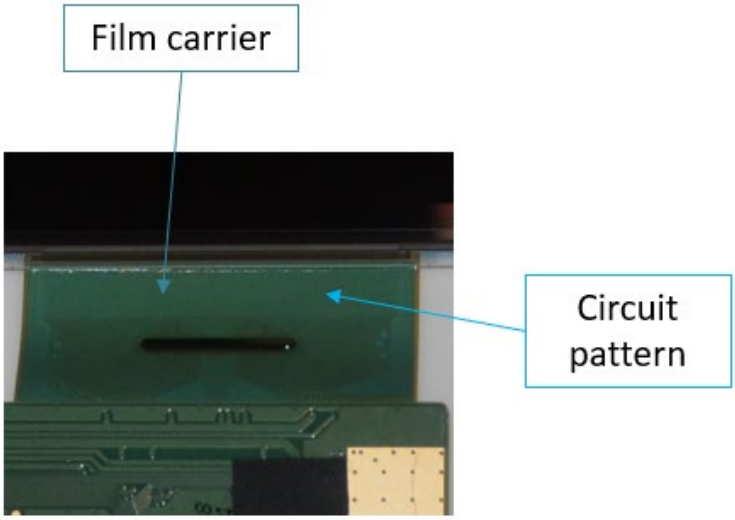

40. The products accused of infringing the ’377 patent are configured such that the liquid crystal driver is mounted on the liquid crystal panel by a light shielding resin disposed on said liquid crystal panel so as to cover one end of the film carrier and a side surface of said liquid crystal driver. An examination of Innolux’s TFT-LCD model no. V236BJ1-D03 demonstrates this:

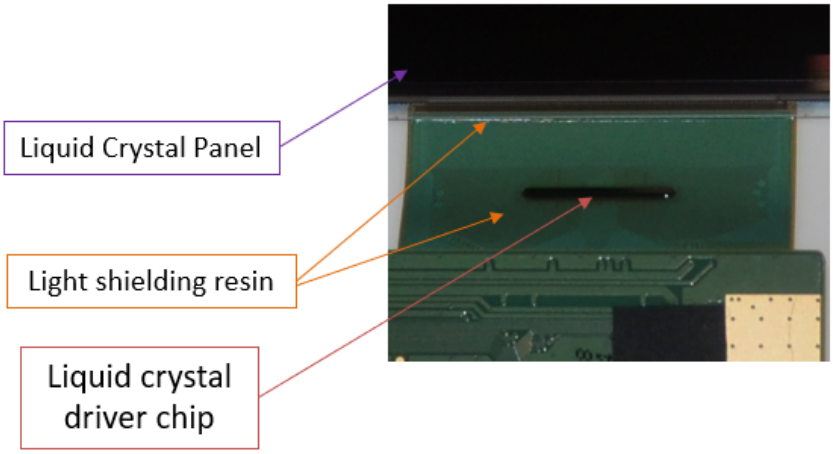

41. At a minimum, Defendant has known of the ’377 patent at least as early as the filing date of the original complaint.

42. Plaintiff has been damaged as a result of Defendant’s infringing conduct described in this Count. Defendant is, thus, liable to Plaintiff in an amount that adequately compensates

Plaintiff for Defendant's infringements, which, by law, cannot be less than a reasonable royalty, together with interest and costs as fixed by this Court under 35 U.S.C. § 284.

43. Plaintiff has complied with the requirements of 35 U.S.C. § 287, to the extent necessary and/or applicable, and is entitled to collect pre- and post-filing damages for Defendant's infringements of the '377 patent.

COUNT II
(Infringement of U.S. Patent No. 6,822,706)

44. Plaintiff incorporates paragraphs 1 through 43 herein by reference.

45. This cause of action arises under the patent laws of the United States, and in particular, 35 U.S.C. §§ 271, *et seq*.

46. Plaintiff is the owner of the '706 patent with all substantial rights to the '706 patent including the exclusive right to enforce, sue, and recover damages for past and future infringement.

47. The '706 patent is valid, enforceable and was duly issued in full compliance with Title 35 of the United States Code.

DIRECT INFRINGEMENT (35 U.S.C. §271(a))

48. Defendant has and continues to infringe literally, and/or under the Doctrine of Equivalents, one or more claims of the '706 patent in this judicial district and elsewhere in Texas and the United States.

49. Innolux directly infringes the '706 patent via 35 U.S.C. § 271(a) by making, offering for sale, using, testing, selling, and/or importing those Accused Products, their components and processes, and/or products containing the same that incorporate the fundamental technologies covered by the '706 patent. For example, Innolux directly infringes the '706 patent by offering for sale, selling, and/or importing those Accused Products, their components and processes, and/or products containing the same that incorporate the fundamental technologies

covered by the ’706 patent, to its alter egos, agents, intermediaries, distributors, importers, customers, subsidiaries, and/or consumers. Furthermore, on information and belief, Innolux sells and makes the Accused Products outside of the United States, delivers those products to its customers, distributors, and/or subsidiaries in the United States, or in the case that it delivers the Accused Products outside of the United States it does so intending and/or knowing that those products are destined for the United States and/or designing those products for sale in the United States, thereby directly infringing the ’706 patent. *See, e.g., Lake Cherokee Hard Drive Techs., L.L.C. v. Marvell Semiconductor, Inc.*, 964 F. Supp. 2d 653, 658 (E.D. Tex. 2013). Furthermore, Innolux directly infringes the ’706 patent through its direct involvement in the activities of its subsidiaries, including Innocare and INXUSA, including by selling and offering for sale the Accused Products directly to such subsidiaries and importing the Accused Products into the United States for such subsidiaries. Such subsidiaries conduct activities that constitute direct infringement of the ’706 patent under 35 U.S.C. § 271(a) by making, using, testing, offering for sale, selling, and/or importing those Accused Products. On information and belief, Innolux offers for sale, sells, and imports the Accused Products within the U.S. to, for example, its distributors, customers, subsidiaries, importers, and/or consumers. Further, Innolux is vicariously liable for this infringing conduct of its U.S.-based subsidiaries, e.g., Innocare and INXUSA, (under both the alter ego and agency theories) because, as an example and on information and belief, Innolux and its U.S.-based subsidiaries are essentially the same company, and Innolux has the right and ability to control its subsidiaries infringing acts and receives a direct financial benefit from the infringement of its U.S.-based subsidiaries, e.g., Innocare and INXUSA.

50. For example, Innolux infringes claim 1 of the ’706 patent. The products accused of infringing the ’706 patent comprise a liquid crystal display panel. For example, Innolux’s TFT-

LCD model no. V236BJ1-D03, which is used in products such as the Vizio TV model number D24h – J09, includes an LCD display panel and LCM label.

LCM label

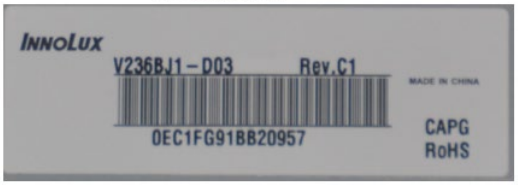

51. The products accused of infringing the ’706 patent comprise a liquid crystal panel comprising liquid crystal cells, a first plate disposed on a displaying side of the cells, and a second plate disposed on a reverse side of the cells. For example, an examination of Innolux’s TFT-LCD model no. V236BJ1-D03 demonstrates this:

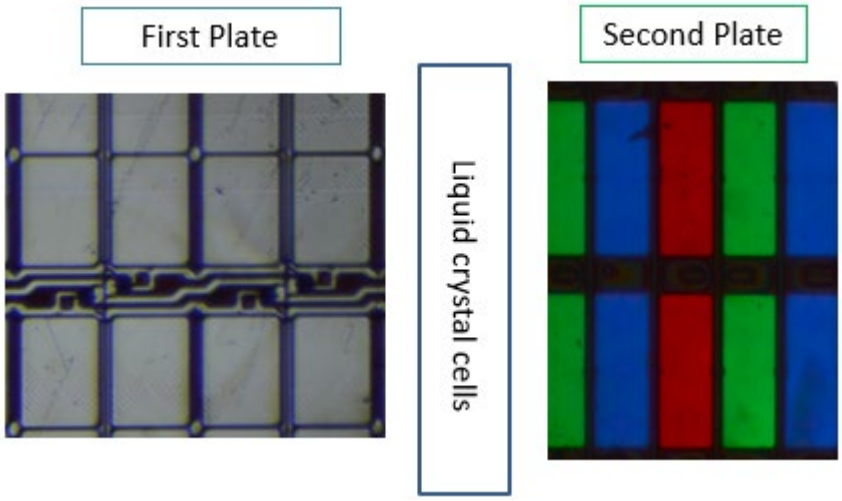

52. The products accused of infringing the ’706 patent comprise a liquid crystal driver electrically connected with the liquid crystal panel through a circuit pattern. An examination of Innolux’s TFT-LCD model no. V236BJ1-D03 demonstrates this:

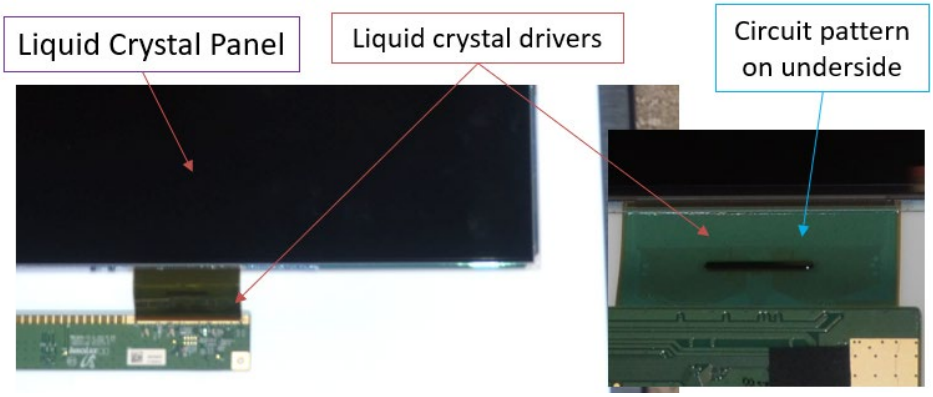

53. The products accused of infringing the ’706 patent comprise a first light shielding material disposed adjacent a face of said liquid crystal driver so as to prevent an outer light from being incident to said liquid crystal driver. An examination of Innolux’s TFT-LCD model no. V236BJ1-D03 demonstrates this:

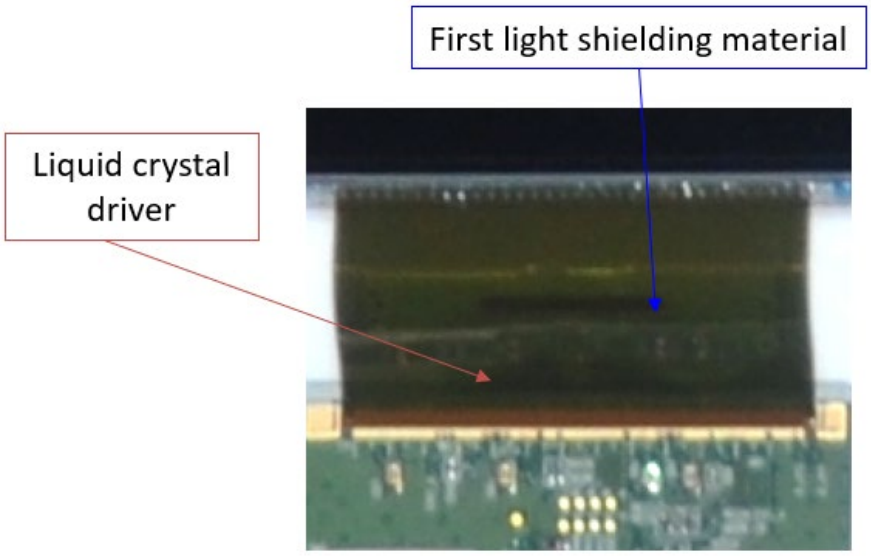

54. The products accused of infringing the ’706 patent comprise a second light shielding material disposed adjacent an opposite face of said liquid crystal driver so as to prevent

an outer light from being incident to said liquid crystal driver. An examination of Innolux's TFT-LCD model no. V236BJ1-D03 demonstrates this:

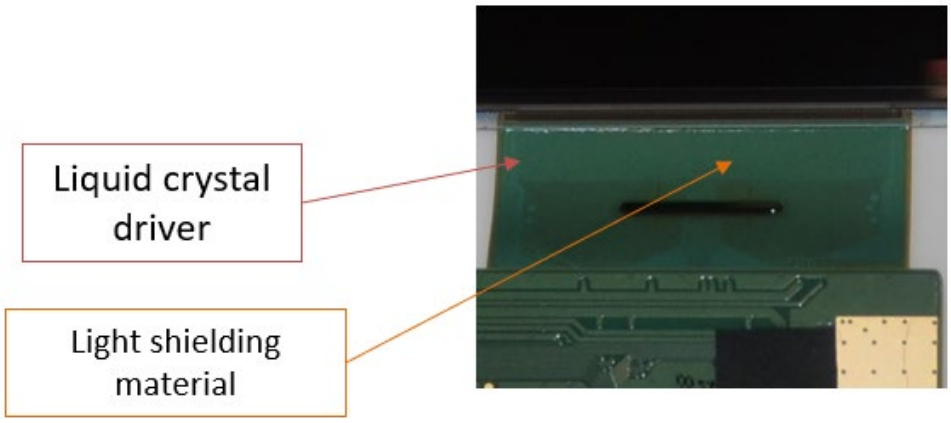

55. The products accused of infringing the '706 patent comprise a diffusion sheet located adjacent said liquid crystal display panel. An examination of Innolux's TFT-LCD model no. V236BJ1-D03 demonstrates this:

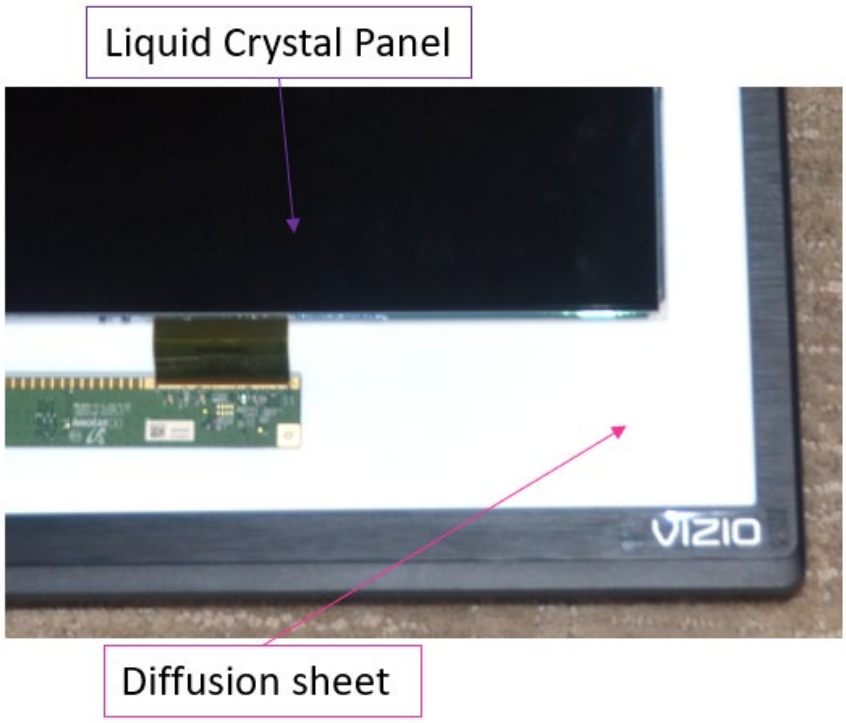

56. The products accused of infringing the '706 patent are configured such that the diffusion sheet comprises a light diffusing area and a light absorbing area located on the outer

periphery thereof, the light diffusing area serving to diffuse illumination light from a light source to the liquid crystal display panel, and the light absorbing area serving to absorb the extraneous light incident on said liquid crystal driver. For example, Innolux's TFT-LCD model no. V236BJ1-D03 includes a light diffusing area that diffuses diffuse illumination light from a light source to the liquid crystal display panel. Innolux's TFT-LCD model no. V236BJ1-D03 also includes a light absorbing area that absorbs the extraneous light incident on said liquid crystal driver. An examination of Innolux's TFT-LCD model no. V236BJ1-D03 demonstrates this:

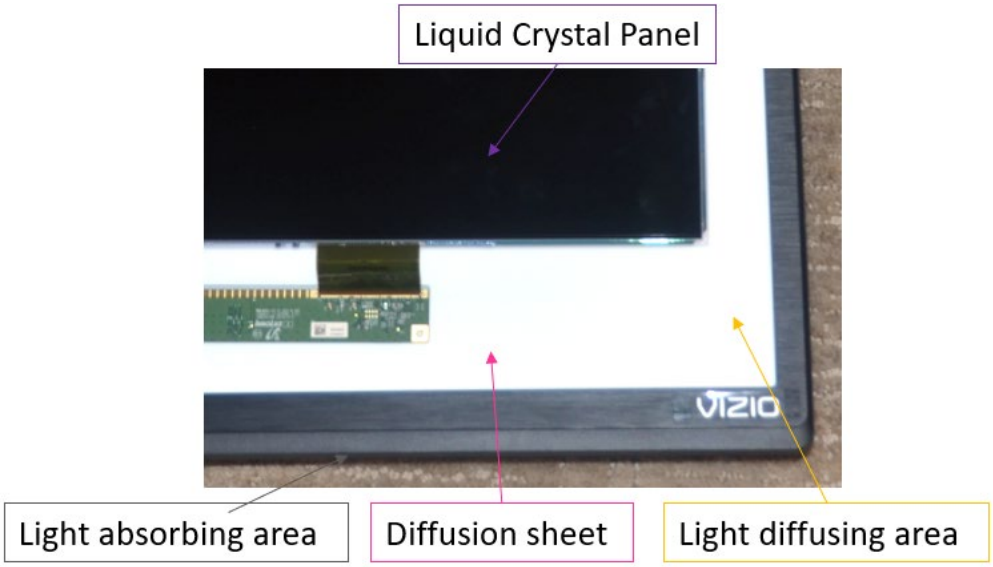

57. At a minimum, Defendant has known of the '706 patent at least as early as the filing date of the original complaint. Additionally, Defendant has known about the '706 patent since at least February 8, 2017, when Defendant received notice of its infringement from a former patent owner Godo Kaisha IP Bridge 1. In addition, Defendant has known about the '706 patent since at least April 18, 2017, when Defendant received notice of its infringement from a former patent owner Godo Kaisha IP Bridge 1. Furthermore, Defendant has known about the '706 patent since at least July 29, 2020, when Defendant again received notice of its infringement.

INDIRECT INFRINGEMENT (35 U.S.C. §271(b))

58. On information and belief, since at least the above-mentioned dates when Innolux was on notice of its infringement, Innolux has actively induced, under U.S.C. § 271(b), its distributors, customers, subsidiaries, importers, testing outfits, and/or consumers that import, use, purchase, offer to sell, or sell the Accused Products comprising all of the limitations of one or more claims of the ’706 patent to directly infringe one or more claims of the ’706 patent by using, offering for sale, selling, and/or importing the Accused Products. Since at least the notice provided on the above-mentioned dates, Innolux does so with knowledge, or with willful blindness of the fact, that the induced acts constitute infringement of the ’706 patent. Innolux intends to cause, and has taken affirmative steps to induce infringement by its distributors, importers, testing outfits, customers, subsidiaries, and/or consumers by at least, inter alia, creating advertisements that promote the infringing use of the Accused Products, creating and/or maintaining established distribution channels for the Accused Products into and within the United States, manufacturing the Accused Products in conformity with U.S. laws and regulations, distributing or making available instructions or manuals for these products to purchasers and prospective buyers, testing and certifying features related to infringing features in the Accused Products, and/or providing technical support, replacement parts, or services for these products to these purchasers in the United States.

59. On information and belief, despite having knowledge of the ’706 patent and its infringement, Innolux specifically intended for others to import and sell products accused of infringing the ’706 patent. For example, Innolux specifically intended for its U.S.-based subsidiaries or customers to import and sell products accused of infringing the ’706 patent. On information and belief, Defendant instructs and encourages the importers to import and/or sell

products accused of infringing the ’706 patent. On information and belief, the purchase and sale agreements between Innolux and the importers provide such instruction and/or encouragement. Further, on information and belief, Innolux’s U.S.-based subsidiaries exist for inter alia, the purpose of importing and selling products accused of infringing the ’706 patent in the United States.

60. Upon information and belief, despite having knowledge of the ’706 patent and knowledge that it is directly and/or indirectly infringing one or more claims of the ’706 patent, Defendant has nevertheless continued its infringing conduct and disregarded an objectively high likelihood of infringement. Defendant’s infringing activities relative to the ’706 patent have been, and continue to be, willful, wanton, malicious, in bad-faith, deliberate, consciously wrongful, flagrant, and an egregious case of misconduct beyond typical infringement such that Plaintiff is entitled under 35 U.S.C. § 284 to enhanced damages up to three times the amount found or assessed.

61. Plaintiff has been damaged as a result of Defendant’s infringing conduct described in this Count. Defendant is, thus, liable to Plaintiff in an amount that adequately compensates Plaintiff for Defendant’s infringements, which, by law, cannot be less than a reasonable royalty, together with interest and costs as fixed by this Court under 35 U.S.C. § 284.

62. Plaintiff has complied with the requirements of 35 U.S.C. § 287, to the extent necessary and/or applicable, and is entitled to collect pre- and post-filing damages for Defendant’s infringements of the ’706 patent.

COUNT III
(Infringement of U.S. Patent No. 7,583,347)

63. Plaintiff incorporates paragraphs 1 through 62 herein by reference.

64. This cause of action arises under the patent laws of the United States, and in particular, 35 U.S.C. §§ 271, *et seq*.

65. Plaintiff is the owner of the ’347 patent with all substantial rights to the ’347 patent including the exclusive right to enforce, sue, and recover damages for past infringement.

66. The ’347 patent is valid, enforceable and was duly issued in full compliance with Title 35 of the United States Code.

DIRECT INFRINGEMENT (35 U.S.C. §271(a))

67. Defendant has and continues to infringe literally, and/or under the Doctrine of Equivalents, one or more claims of the ’347 patent in this judicial district and elsewhere in Texas and the United States.

68. Innolux directly infringes the ’347 patent via 35 U.S.C. § 271(a) by making, offering for sale, using, testing, selling, and/or importing those Accused Products, their components and processes, and/or products containing the same that incorporate the fundamental technologies covered by the ’347 patent. For example, Innolux directly infringes the ’347 patent by offering for sale, selling, and/or importing those Accused Products, their components and processes, and/or products containing the same that incorporate the fundamental technologies covered by the ’347 patent, to its alter egos, agents, intermediaries, distributors, importers, customers, subsidiaries, and/or consumers. Furthermore, on information and belief, Innolux sells and makes the Accused Products outside of the United States, delivers those products to its customers, distributors, and/or subsidiaries in the United States, or in the case that it delivers the Accused Products outside of the United States it does so intending and/or knowing that those products are destined for the United States and/or designing those products for sale in the United States, thereby directly infringing the ’347 patent. *See, e.g., Lake Cherokee Hard Drive Techs.,*

L.L.C. v. Marvell Semiconductor, Inc., 964 F. Supp. 2d 653, 658 (E.D. Tex. 2013). Furthermore, Innolux directly infringes the ’347 patent through its direct involvement in the activities of its subsidiaries, including Innocare and INXUSA, including by selling and offering for sale the Accused Products directly to such subsidiaries and importing the Accused Products into the United States for such subsidiaries. Such subsidiaries conduct activities that constitute direct infringement of the ’347 patent under 35 U.S.C. § 271(a) by making, using, testing, offering for sale, selling, and/or importing those Accused Products. On information and belief, Innolux offers for sale, sells, and imports the Accused Products within the U.S. to, for example, its distributors, customers, subsidiaries, importers, and/or consumers. Further, Innolux is vicariously liable for this infringing conduct of its U.S.-based subsidiaries, e.g., Innocare and INXUSA, (under both the alter ego and agency theories) because, as an example and on information and belief, Innolux and its U.S.-based subsidiaries are essentially the same company, and Innolux has the right and ability to control its subsidiaries infringing acts and receives a direct financial benefit from the infringement of its U.S.-based subsidiaries, e.g., Innocare and INXUSA.

69. For example, Innolux infringes claim 1 of the ’347 patent. The products accused of infringing the ’347 patent comprise a liquid crystal display. For example, Innolux’s TFT-LCD model no. V236BJ1-D03, which is used in products such as the Vizio TV model number D24h – J09, includes an LCD display and LCM label.

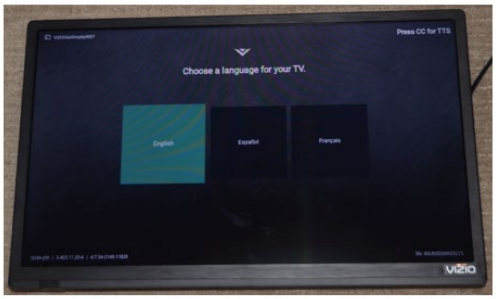

LCM label

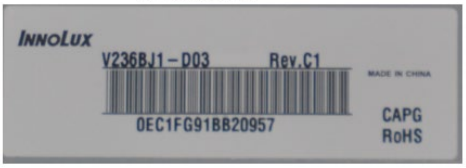

70. The products accused of infringing the ’347 patent comprise a liquid crystal panel including an array substrate having an upper surface on which a common electrode, a pixel electrode, a scanning signal line, a video signal line, and a semiconductor switching device are formed, an opposing substrate disposed so as to be opposite to the upper surface of the array substrate, and a liquid crystal layer disposed between the array substrate and the opposing substrate. An examination of Innolux’s TFT-LCD model no. V236BJ1-D03 demonstrates this:

Array substrate

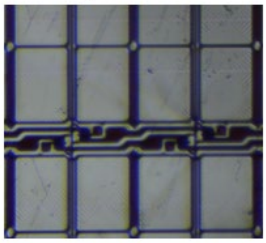

liquid crystal cells

Counter substrate

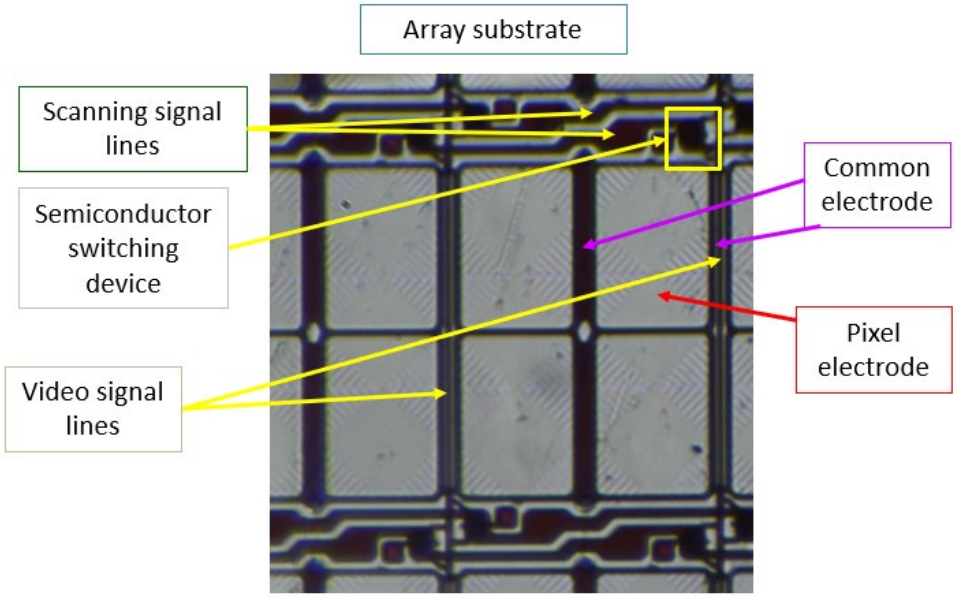

71. The products accused of infringing the ’347 patent comprise a reflecting face formed below the liquid crystal panel, wherein a light reflected on the reflecting face is transmitted through the liquid crystal panel. The configuration of the products accused of infringing the ’347 patent is such that light reflected on the reflecting face is transmitted through the liquid crystal panel (the reflecting face is beneath the diffuser in the below illustration). An examination of Innolux’s TFT-LCD model no. V236BJ1-D03 demonstrates this:

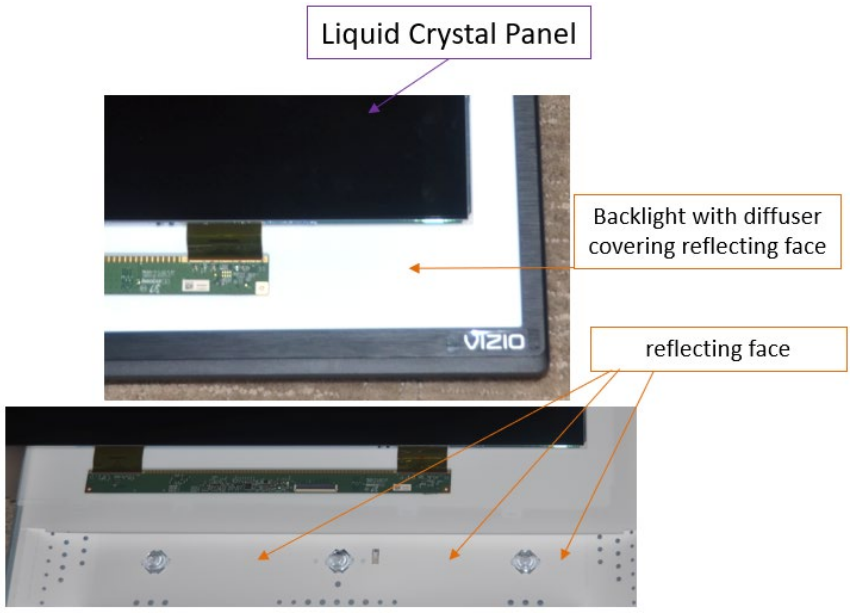

72. The products accused of infringing the ’347 patent are configured such that at least one electrode of the common electrode and the pixel electrode is constituted by an electrode portion and a wiring portion. For example, the pixel electrode is constituted by an electrode portion and a wiring portion. An examination of Innolux’s TFT-LCD model no. V236BJ1-D03 demonstrates this:

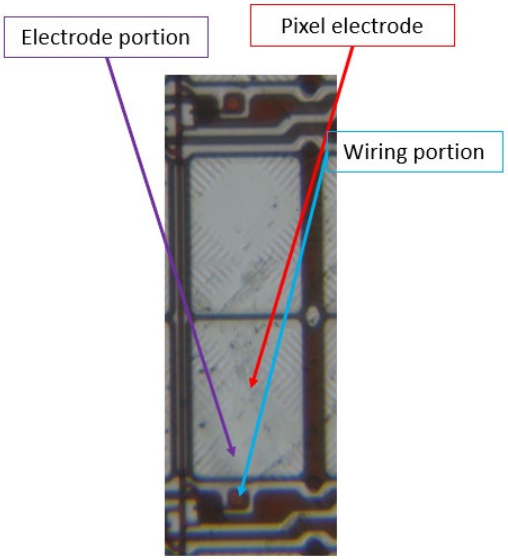

73. The products accused of infringing the ’347 patent are configured such that the electrode portion is at least partially constituted by a transparent electric conductor. For example, the pixel electrode is transparent. An examination of Innolux’s TFT-LCD model no. V236BJ1-D03 demonstrates this:

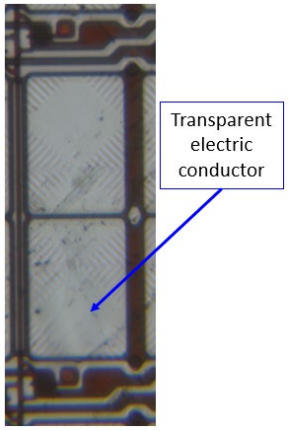

74. The products accused of infringing the ’347 patent are configured such that the wiring portion is formed in the layer in which the scanning signal line is formed. An examination of Innolux’s TFT-LCD model no. V236BJ1-D03 demonstrates this:

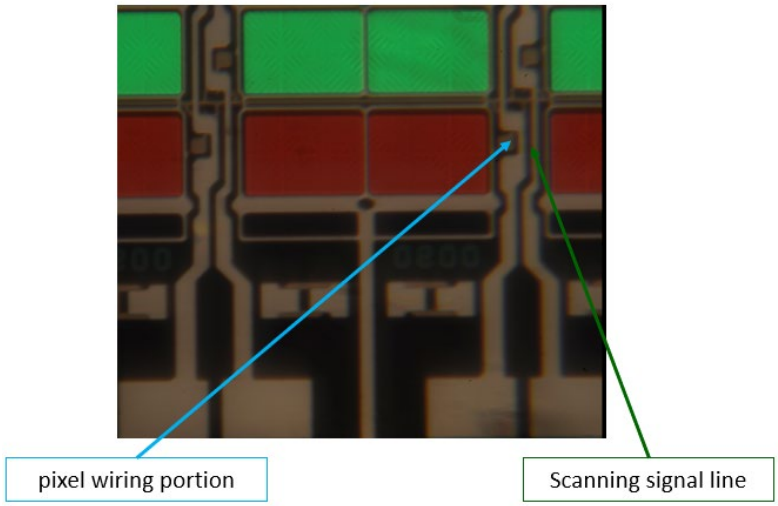

75. At a minimum, Defendant has known of the ’347 patent at least as early as the filing date of the original complaint. Additionally, Defendant has known about the ’347 patent since at least February 8, 2017, when Defendant received notice of its infringement from a former patent owner Godo Kaisha IP Bridge 1. In addition, Defendant has known about the ’347 patent since at least April 18, 2017, when Defendant received notice of its infringement from a former patent owner Godo Kaisha IP Bridge 1. Furthermore, Defendant has known about the ’347 patent since at least July 29, 2020, when Defendant again received notice of its infringement.

INDIRECT INFRINGEMENT (35 U.S.C. §271(b))

76. On information and belief, since at least the above-mentioned dates when Innolux was on notice of its infringement, Innolux has actively induced, under U.S.C. § 271(b), its distributors, customers, subsidiaries, importers, testing outfits, and/or consumers that import, use, purchase, offer to sell, or sell the Accused Products comprising all of the limitations of one or more claims of the ’347 patent to directly infringe one or more claims of the ’347 patent by using,

offering for sale, selling, and/or importing the Accused Products. Since at least the notice provided on the above-mentioned dates, Innolux does so with knowledge, or with willful blindness of the fact, that the induced acts constitute infringement of the ’347 patent. Innolux intends to cause, and has taken affirmative steps to induce infringement by its distributors, importers, testing outfits, customers, subsidiaries, and/or consumers by at least, inter alia, creating advertisements that promote the infringing use of the Accused Products, creating and/or maintaining established distribution channels for the Accused Products into and within the United States, manufacturing the Accused Products in conformity with U.S. laws and regulations, distributing or making available instructions or manuals for these products to purchasers and prospective buyers, testing and certifying features related to infringing features in the Accused Products, and/or providing technical support, replacement parts, or services for these products to these purchasers in the United States.

77. On information and belief, despite having knowledge of the ’347 patent and its infringement, Innolux specifically intended for others to import and sell products accused of infringing the ’347 patent. For example, Innolux specifically intended for its U.S.-based subsidiaries or customers to import and sell products accused of infringing the ’347 patent. On information and belief, Defendant instructs and encourages the importers to import and/or sell products accused of infringing the ’347 patent. On information and belief, the purchase and sale agreements between Innolux and the importers provide such instruction and/or encouragement. Further, on information and belief, Innolux’s U.S.-based subsidiaries exist for inter alia, the purpose of importing and selling products accused of infringing the ’347 patent in the United States.

78. Upon information and belief, despite having knowledge of the ’347 patent and knowledge that it is directly and/or indirectly infringing one or more claims of the ’347 patent, Defendant has nevertheless continued its infringing conduct and disregarded an objectively high likelihood of infringement. Defendant’s infringing activities relative to the ’347 patent have been, and continue to be, willful, wanton, malicious, in bad-faith, deliberate, consciously wrongful, flagrant, and an egregious case of misconduct beyond typical infringement such that Plaintiff is entitled under 35 U.S.C. § 284 to enhanced damages up to three times the amount found or assessed.

79. Plaintiff has been damaged as a result of Defendant’s infringing conduct described in this Count. Defendant is, thus, liable to Plaintiff in an amount that adequately compensates Plaintiff for Defendant’s infringements, which, by law, cannot be less than a reasonable royalty, together with interest and costs as fixed by this Court under 35 U.S.C. § 284.

80. Plaintiff has complied with the requirements of 35 U.S.C. § 287, to the extent necessary and/or applicable, and is entitled to collect pre- and post-filing damages for Defendant’s infringements of the ’347 patent.

COUNT IV
(Infringement of U.S. Patent No. 7,995,047)

81. Plaintiff incorporates paragraphs 1 through 80 herein by reference.

82. This cause of action arises under the patent laws of the United States, and in particular, 35 U.S.C. §§ 271, *et seq*.

83. Plaintiff is the owner of the ’047 patent with all substantial rights to the ’047 patent including the exclusive right to enforce, sue, and recover damages for past and future infringement.

84. The ’047 patent is valid, enforceable and was duly issued in full compliance with Title 35 of the United States Code.

DIRECT INFRINGEMENT (35 U.S.C. §271(a))

85. Defendant has and continues to infringe literally, and/or under the Doctrine of Equivalents, one or more claims of the ’047 patent in this judicial district and elsewhere in Texas and the United States.

86. Innolux directly infringes the ’047 patent via 35 U.S.C. § 271(a) by making, offering for sale, using, testing, selling, and/or importing those Accused Products, their components and processes, and/or products containing the same that incorporate the fundamental technologies covered by the ’047 patent. For example, Innolux directly infringes the ’047 patent by offering for sale, selling, and/or importing those Accused Products, their components and processes, and/or products containing the same that incorporate the fundamental technologies covered by the ’047 patent, to its alter egos, agents, intermediaries, distributors, importers, customers, subsidiaries, and/or consumers. Furthermore, on information and belief, Innolux sells and makes the Accused Products outside of the United States, delivers those products to its customers, distributors, and/or subsidiaries in the United States, or in the case that it delivers the Accused Products outside of the United States it does so intending and/or knowing that those products are destined for the United States and/or designing those products for sale in the United States, thereby directly infringing the ’047 patent. *See, e.g., Lake Cherokee Hard Drive Techs., L.L.C. v. Marvell Semiconductor, Inc.*, 964 F. Supp. 2d 653, 658 (E.D. Tex. 2013). Furthermore, Innolux directly infringes the ’047 patent through its direct involvement in the activities of its subsidiaries, including Innocare and INXUSA, including by selling and offering for sale the Accused Products directly to such subsidiaries and importing the Accused Products into the United States for such subsidiaries. Such subsidiaries conduct activities that constitute direct infringement of the ’047 patent under 35 U.S.C. § 271(a) by making, using, testing, offering for sale, selling,

and/or importing those Accused Products. On information and belief, Innolux offers for sale, sells, and imports the Accused Products within the U.S. to, for example, its distributors, customers, subsidiaries, importers, and/or consumers. Further, Innolux is vicariously liable for this infringing conduct of its U.S.-based subsidiaries, e.g., Innocare and INXUSA, (under both the alter ego and agency theories) because, as an example and on information and belief, Innolux and its U.S.-based subsidiaries are essentially the same company, and Innolux has the right and ability to control its subsidiaries infringing acts and receives a direct financial benefit from the infringement of its U.S.-based subsidiaries, e.g., Innocare and INXUSA.

87. For example, Innolux infringes claim 1 of the ’047 patent. The products accused of infringing the ’047 patent comprise a current driving device. For example, Innolux’s power supply board model no. TPD MT5583T.PA561, which is used in products such as the Vizio TV model number D24h – J09, is a current driving device.

Label on Power Supply Board

88. The products accused of infringing the ’047 patent comprise a first voltage supply source for supplying a first voltage. An examination of Innolux’s power supply board model no. TPD MT5583T.PA561 demonstrates this:

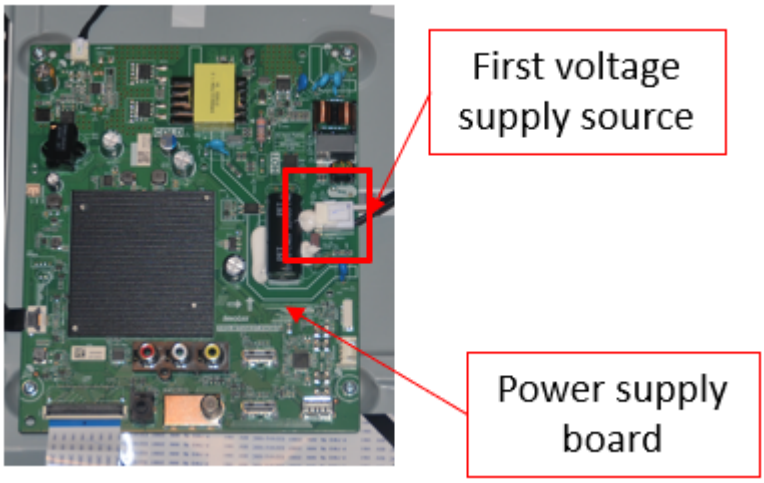

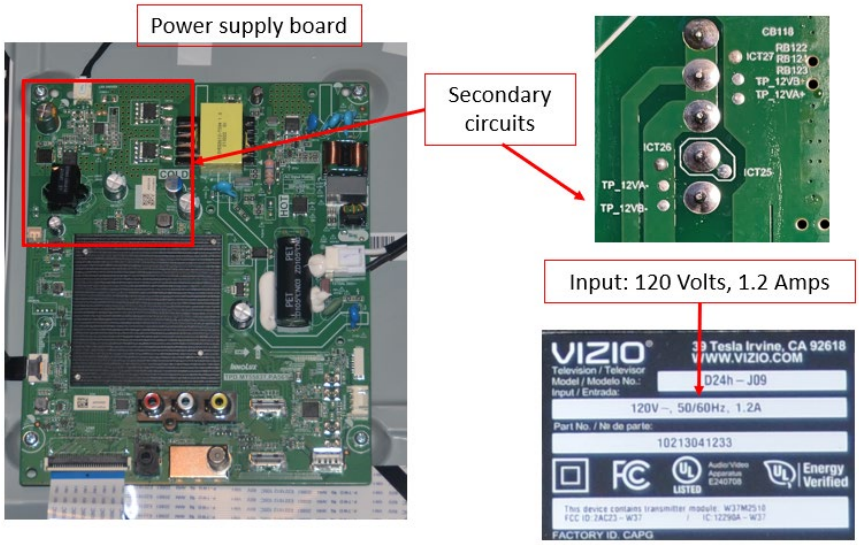

89. The products accused of infringing the ’047 patent comprise a first current supply source for supplying a first electric current. An examination of Innolux’s power supply board model no. TPD MT5583T.PA561 demonstrates a first current comes from a first voltage of 12 volts which is from the secondary side of the transformer circuits in the power supply board supplied by 120 volts, 1.2 amps input power.:

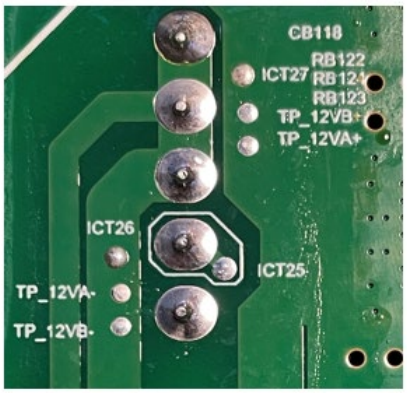

90. The products accused of infringing the ’047 patent comprise a plurality of output terminals. An examination of Innolux’s power supply board model no. TPD MT5583T.PA561 demonstrates this:

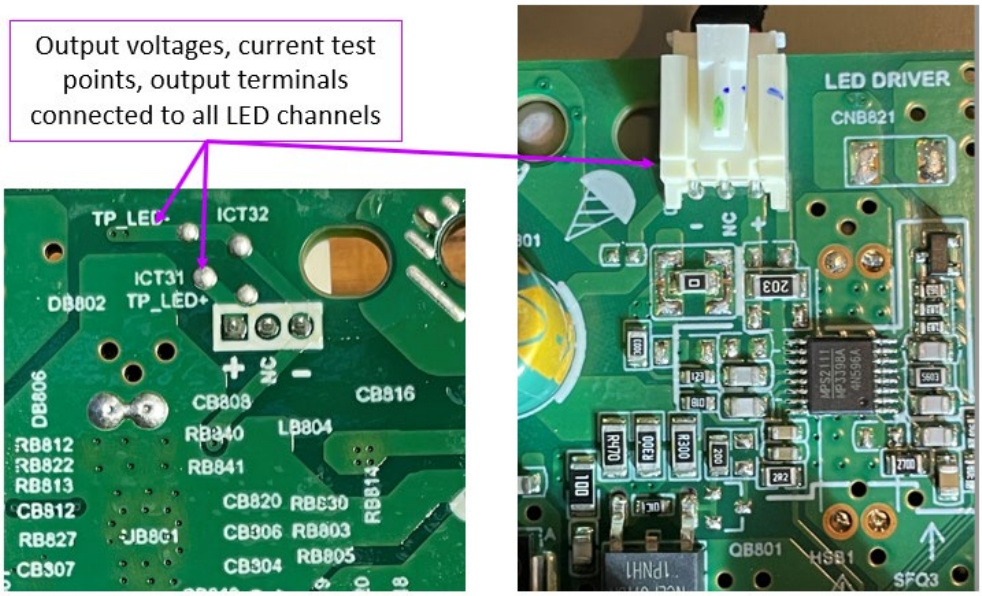

Back of power supply board Front of power supply board

91. The products accused of infringing the ’047 patent comprise a plurality of current output circuits for outputting an electric current in accordance with said first electric current, each of said current output circuits comprising a current-voltage converting circuit, a voltage-current converting circuit, a voltage holding circuit having a terminal being connected to a reference voltage different from the first voltage, and at least one current output terminal. An examination of Innolux’s power supply board model no. TPD MT5583T.PA561 demonstrates the presence of a plurality of current output circuits for outputting an electric current in accordance with said first electric current:

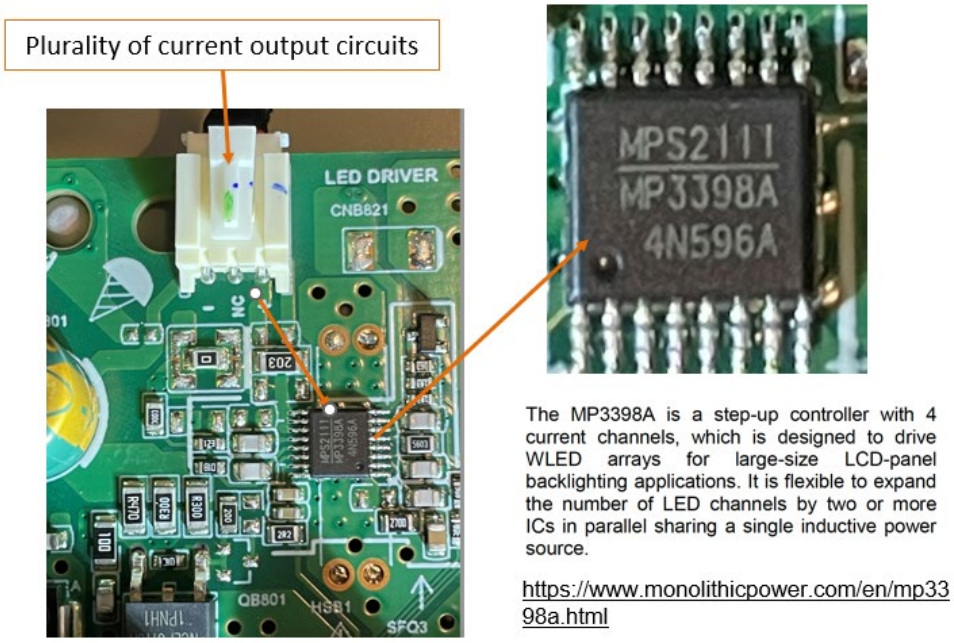

92. The products accused of infringing the ’047 patent are configured such that each of the current output circuits comprise a current-voltage converting circuit, and a voltage-current converting circuit. For example, an examination of Innolux’s power supply board model no. TPD MT5583T.PA561 comprising an MPS3398A chipset demonstrates this:

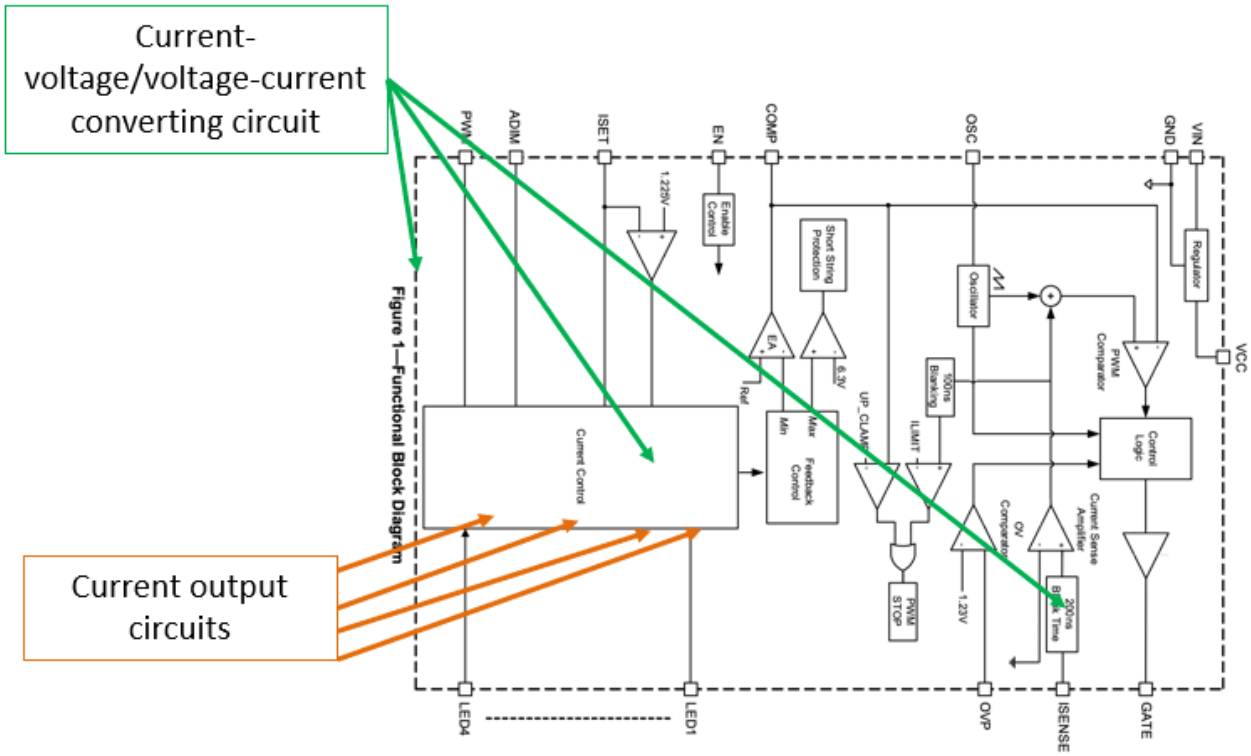

93. The products accused of infringing the ’047 patent are configured such that each of the current output circuits comprise a voltage holding circuit having a terminal being connected to a reference voltage different from the first voltage, and at least one current output terminal. For example, an examination of Innolux’s power supply board model no. TPD MT5583T.PA561 comprising an MPS3398A chipset demonstrates this:

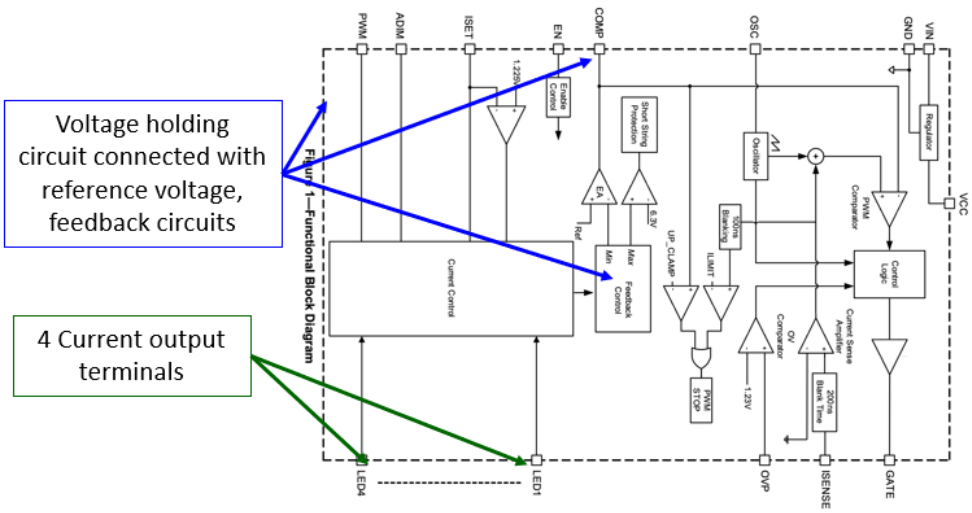

94. The products accused of infringing the ’047 patent are configured such that each of said circuits operates in three operation modes including a voltage supply mode, a current supply mode, and a current output mode. For example, Innolux’s power supply board model no. TPD MT5583T.PA561 comprising an MPS3398A chipset supports all three operation modes. As demonstrated above and below, Innolux’s power supply board model no. TPD MT5583T.PA561 comprising an MPS3398A chipset is configured such that each of the the circuits operate in three operation modes, including a voltage supply mode, a current supply mode, and a current output mode:

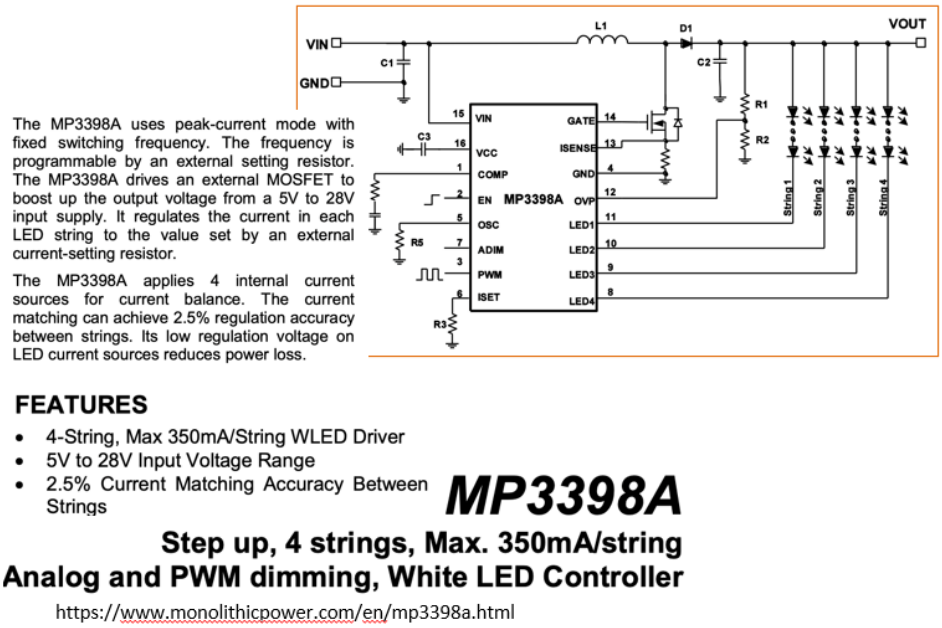

95. The products accused of infringing the ’047 patent are configured such that under said voltage supply mode, each of said current output circuits receives said first voltage from said first voltage supply source, and the first voltage is supplied to another terminal of said voltage holding circuit. For example, Innolux’s power supply board model no. TPD MT5583T.PA561 comprising an MPS3398A chipset is configured in such a manner:

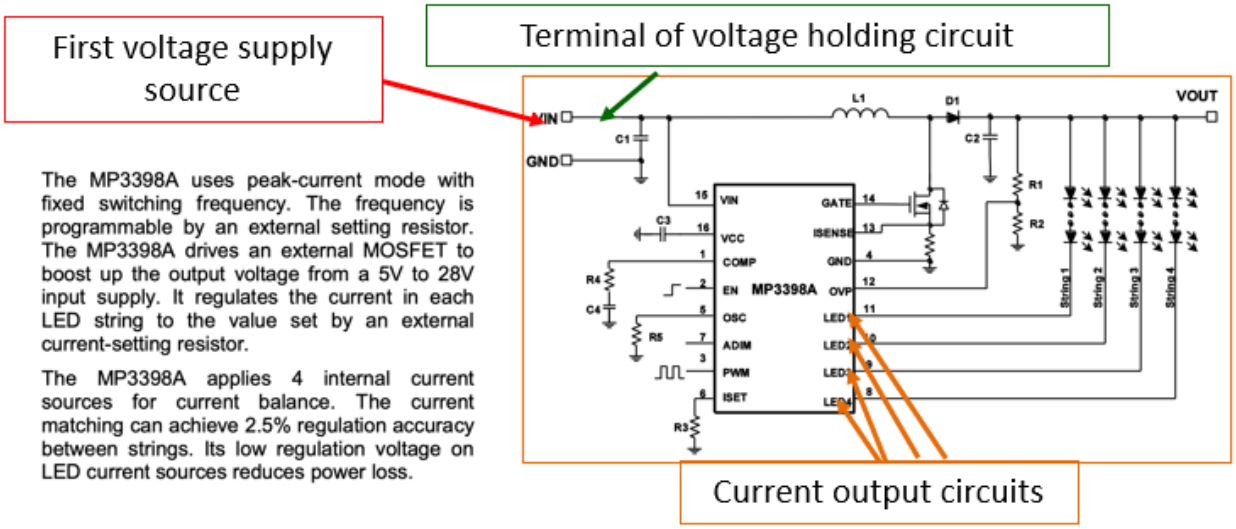

96. The products accused of infringing the ’047 patent are configured such that under said current supply mode, each of said current output circuits receives said first current from said first current supply source, and generates a second voltage by said current-voltage converting circuit, and the first current is supplied to said another terminal of said voltage holding circuit. For example, the Accused Product includes at least one current output circuit operable to receive a first current from a first current supply source and generate a second voltage, and another terminal of the voltage holding circuit is also supplied the first current. Innolux’s power supply board model no. TPD MT5583T.PA561 comprising an MPS3398A chipset is configured in such a manner.

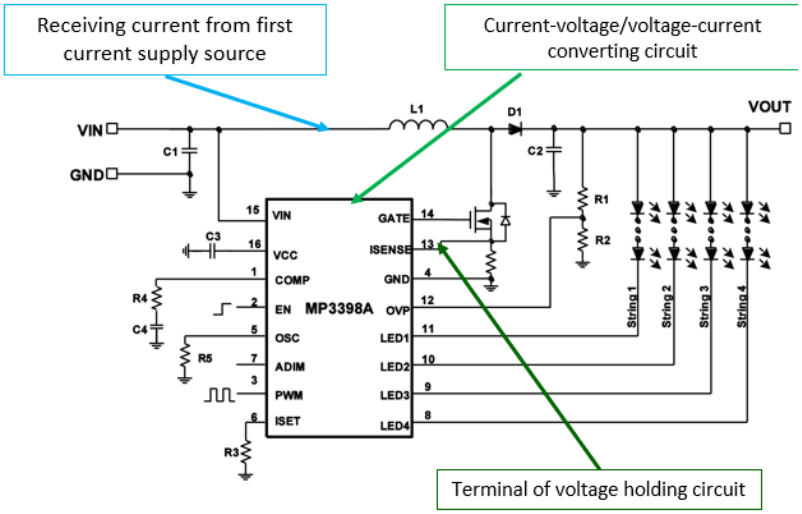

97. The products accused of infringing the ’047 patent are configured such that under said current output mode, each of said current output circuits outputs an output current according to said voltage held in said voltage holding circuit by said voltage-current converting circuit. For example, the current control block converts current to voltage in the feedback circuits and holds for comparison. Innolux’s power supply board model no. TPD MT5583T.PA561 comprising an MPS3398A chipset is configured in such a manner

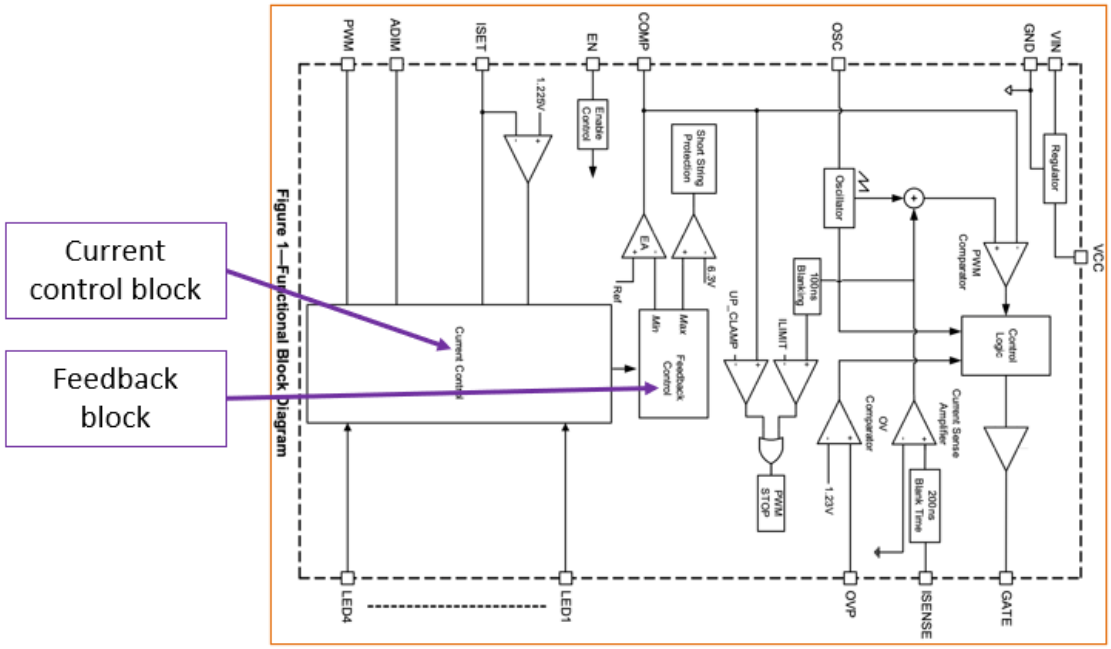

Figure 1—Functional Block Diagram

98. At a minimum, Defendant has known of the ’047 patent at least as early as the filing date of the original complaint. On information and belief, Defendant has known about the ’047 patent since at least February 8, 2017, when Defendant received notice of its infringement from a former patent owner Godo Kaisha IP Bridge 1. On information and belief, Defendant has known about the ’047 patent since at least April 18, 2017, when Defendant received notice of its infringement from a former patent owner Godo Kaisha IP Bridge 1. Furthermore, Defendant has known about the ’047 patent since at least July 29, 2020, when Defendant again received notice of its infringement.

INDIRECT INFRINGEMENT (35 U.S.C. §271(b))

99. On information and belief, since at least the above-mentioned dates when Innolux was on notice of its infringement, Innolux has actively induced, under U.S.C. § 271(b), its distributors, customers, subsidiaries, importers, testing outfits, and/or consumers that import, use, purchase, offer to sell, or sell the Accused Products comprising all of the limitations of one or more claims of the ’047 patent to directly infringe one or more claims of the ’047 patent by using, offering for sale, selling, and/or importing the Accused Products. Since at least the notice provided on the above-mentioned dates, Innolux does so with knowledge, or with willful blindness of the fact, that the induced acts constitute infringement of the ’047 patent. Innolux intends to cause, and has taken affirmative steps to induce infringement by its distributors, importers, testing outfits, customers, subsidiaries, and/or consumers by at least, inter alia, creating advertisements that promote the infringing use of the Accused Products, creating and/or maintaining established distribution channels for the Accused Products into and within the United States, manufacturing the Accused Products in conformity with U.S. laws and regulations, distributing or making available instructions or manuals for these products to purchasers and prospective buyers, testing and certifying features related to infringing features in the Accused Products, and/or providing technical support, replacement parts, or services for these products to these purchasers in the United States.

100. On information and belief, despite having knowledge of the ’047 patent and its infringement, Innolux specifically intended for others to import and sell products accused of infringing the ’047 patent. For example, Innolux specifically intended for its U.S.-based subsidiaries or customers to import and sell products accused of infringing the ’047 patent. On information and belief, Defendant instructs and encourages the importers to import and/or sell

products accused of infringing the ’047 patent. On information and belief, the purchase and sale agreements between Innolux and the importers provide such instruction and/or encouragement. Further, on information and belief, Innolux’s U.S.-based subsidiaries exist for inter alia, the purpose of importing and selling products accused of infringing the ’047 patent in the United States.

101. Upon information and belief, despite having knowledge of the ’047 patent and knowledge that it is directly and/or indirectly infringing one or more claims of the ’047 patent, Defendant has nevertheless continued its infringing conduct and disregarded an objectively high likelihood of infringement. Defendant’s infringing activities relative to the ’047 patent have been, and continue to be, willful, wanton, malicious, in bad-faith, deliberate, consciously wrongful, flagrant, and an egregious case of misconduct beyond typical infringement such that Plaintiff is entitled under 35 U.S.C. § 284 to enhanced damages up to three times the amount found or assessed.

102. Plaintiff has been damaged as a result of Defendant’s infringing conduct described in this Count. Defendant is, thus, liable to Plaintiff in an amount that adequately compensates Plaintiff for Defendant’s infringements, which, by law, cannot be less than a reasonable royalty, together with interest and costs as fixed by this Court under 35 U.S.C. § 284.

103. Plaintiff has complied with the requirements of 35 U.S.C. § 287, to the extent necessary and/or applicable, and is entitled to collect pre- and post-filing damages for Defendant’s infringements of the ’047 patent.

COUNT V
(Infringement of U.S. Patent No. 8,093,830)

104. Plaintiff incorporates paragraphs 1 through 103 herein by reference.

105. This cause of action arises under the patent laws of the United States, and in particular, 35 U.S.C. §§ 271, *et seq*.

106. Plaintiff is the owner of the ’830 patent with all substantial rights to the ’830 patent including the exclusive right to enforce, sue, and recover damages for past and future infringement.

107. The ’830 patent is valid, enforceable and was duly issued in full compliance with Title 35 of the United States Code.

DIRECT INFRINGEMENT (35 U.S.C. §271(a))

108. Defendant has and continues to infringe literally, and/or under the Doctrine of Equivalents, one or more claims of the ’830 patent in this judicial district and elsewhere in Texas and the United States.

109. Innolux directly infringes the ’830 patent via 35 U.S.C. § 271(a) by making, offering for sale, using, testing, selling, and/or importing those Accused Products, their components and processes, and/or products containing the same that incorporate the fundamental technologies covered by the ’830 patent. For example, Innolux directly infringes the ’830 patent by offering for sale, selling, and/or importing those Accused Products, their components and processes, and/or products containing the same that incorporate the fundamental technologies covered by the ’830 patent, to its alter egos, agents, intermediaries, distributors, importers, customers, subsidiaries, and/or consumers. Furthermore, on information and belief, Innolux sells and makes the Accused Products outside of the United States, delivers those products to its customers, distributors, and/or subsidiaries in the United States, or in the case that it delivers the Accused Products outside of the United States it does so intending and/or knowing that those products are destined for the United States and/or designing those products for sale in the United States, thereby directly infringing the ’830 patent. *See, e.g., Lake Cherokee Hard Drive Techs.,*

L.L.C. v. Marvell Semiconductor, Inc., 964 F. Supp. 2d 653, 658 (E.D. Tex. 2013). Furthermore, Innolux directly infringes the ’830 patent through its direct involvement in the activities of its subsidiaries, including Innocare and INXUSA, including by selling and offering for sale the Accused Products directly to such subsidiaries and importing the Accused Products into the United States for such subsidiaries. Such subsidiaries conduct activities that constitute direct infringement of the ’830 patent under 35 U.S.C. § 271(a) by making, using, testing, offering for sale, selling, and/or importing those Accused Products. On information and belief, Innolux offers for sale, sells, and imports the Accused Products within the U.S. to, for example, its distributors, customers, subsidiaries, importers, and/or consumers. Further, Innolux is vicariously liable for this infringing conduct of its U.S.-based subsidiaries, e.g., Innocare and INXUSA, (under both the alter ego and agency theories) because, as an example and on information and belief, Innolux and its U.S.-based subsidiaries are essentially the same company, and Innolux has the right and ability to control its subsidiaries infringing acts and receives a direct financial benefit from the infringement of its U.S.-based subsidiaries, e.g., Innocare and INXUSA.

110. For example, Innolux infringes claim 1 of the ’830 patent. The products accused of infringing the ’830 patent comprise a semiconductor light source driving apparatus. For example, Innolux’s TFT-LCD model no. V236BJ1-D03 and Innolux’s power supply board model no. TPD MT5583T.PA561 comprising an MPS3398A chipset, which are used in products such as the Vizio TV model number D24h – J09, form a semiconductor light source driving apparatus.

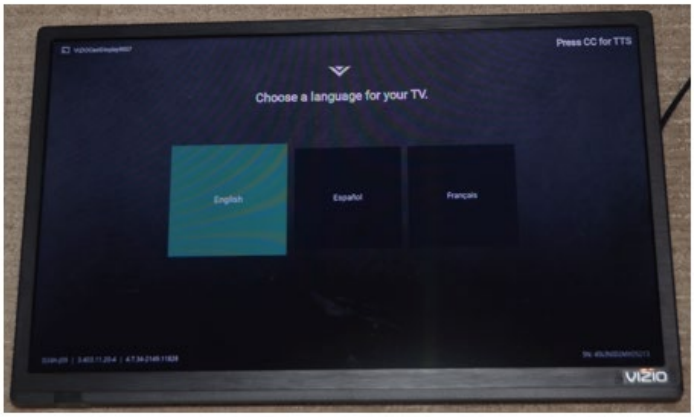

LCM label

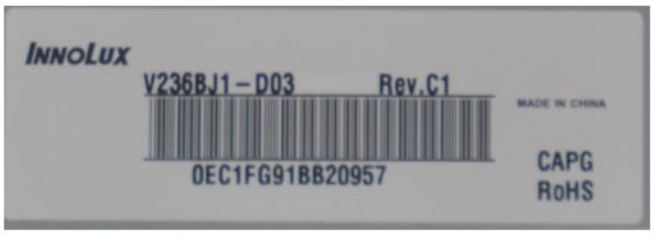

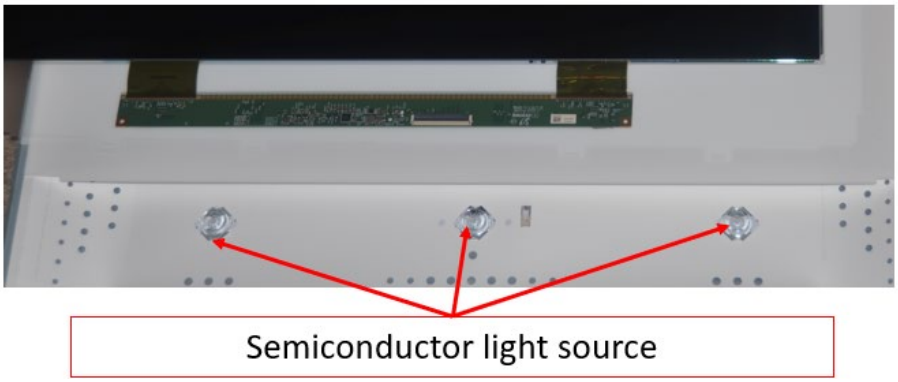

111. The products accused of infringing the ’830 patent comprise a semiconductor light source that is driven by a current. An examination of Innolux’s products accused of infringing the ’830 patent reveals this.

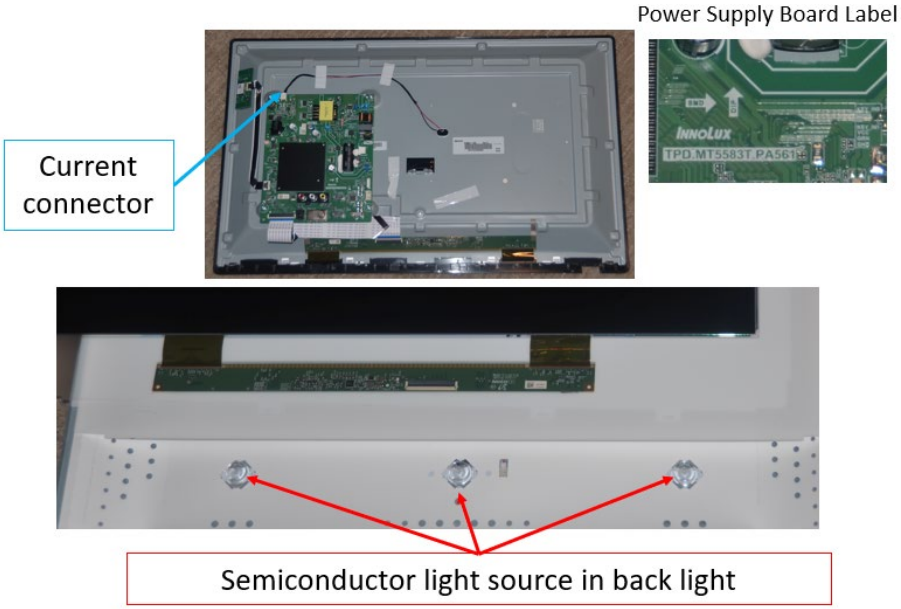

112. The products accused of infringing the ’830 patent comprise a voltage source that drives the semiconductor light source. An examination of Innolux’s products accused of infringing the ’830 patent reveals this.

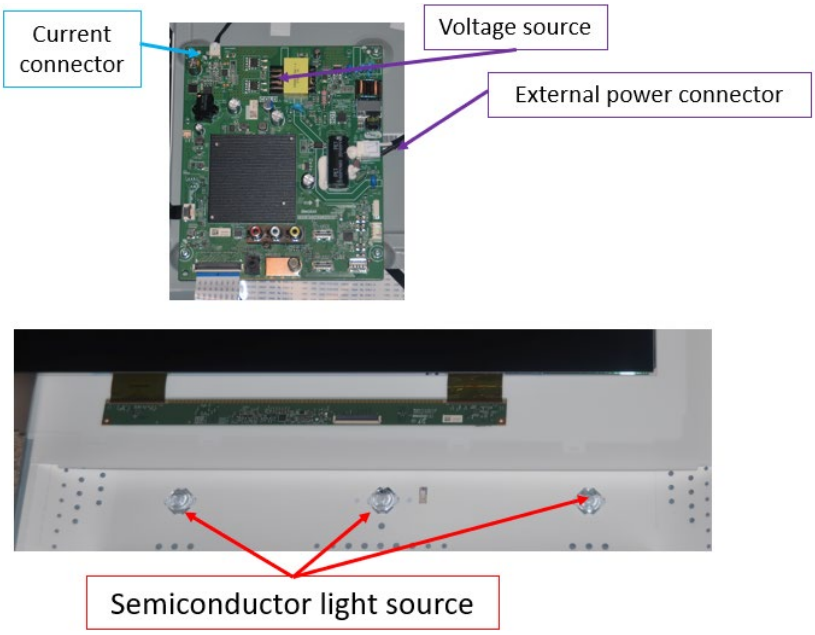

113. The products accused of infringing the ’830 patent comprise an output voltage controlling section that controls a drive current value for driving the semiconductor light source

by controlling an output voltage of the voltage source. An examination of Innolux's products accused of infringing the '830 patent reveals this.

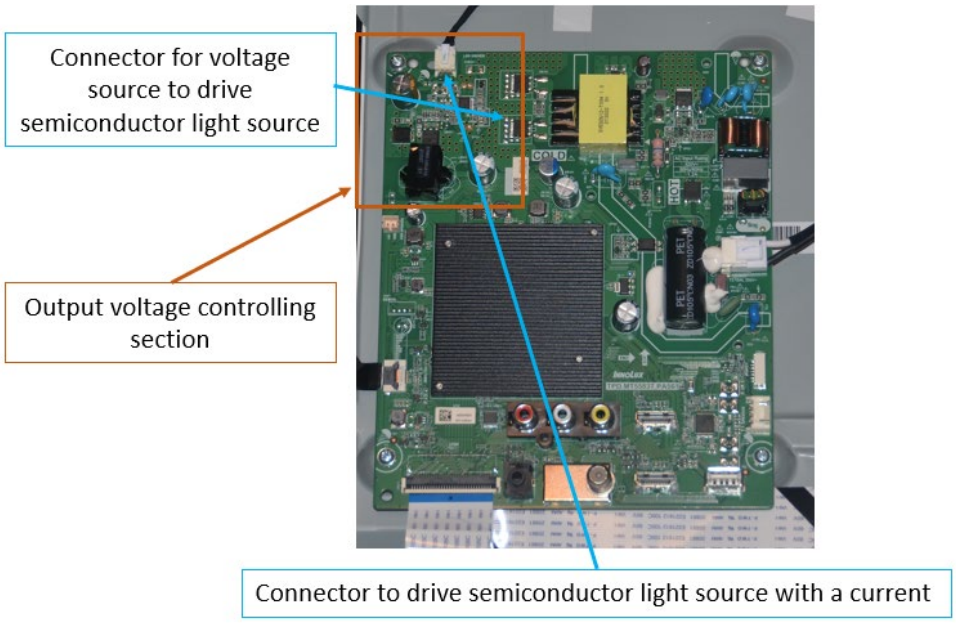

114. The products accused of infringing the '830 patent comprise an output current detecting section that detects an output current of the semiconductor light source. An examination of Innolux's products accused of infringing the '830 patent reveals this.

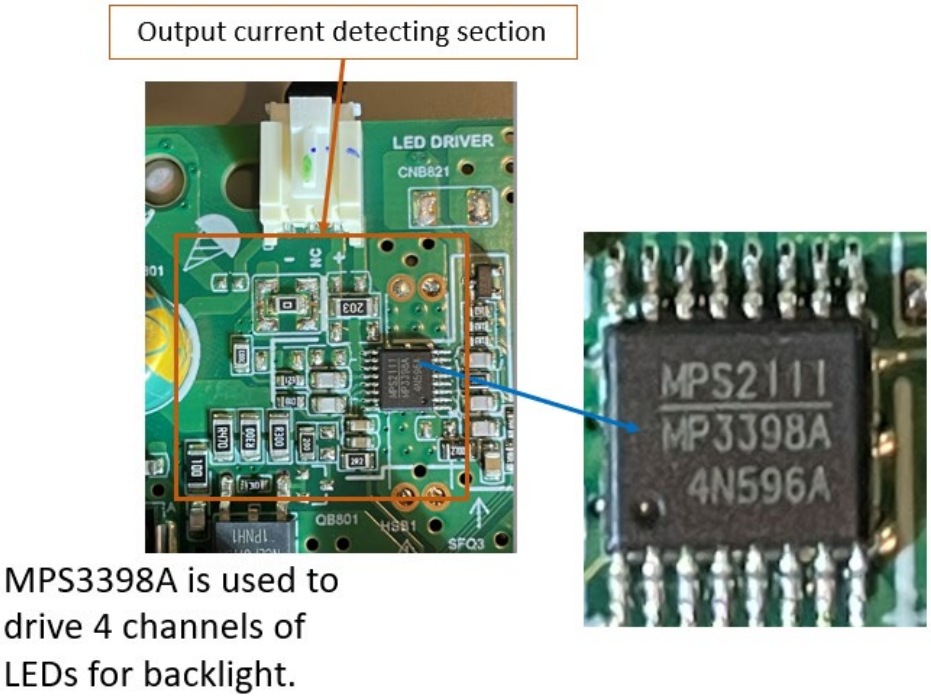

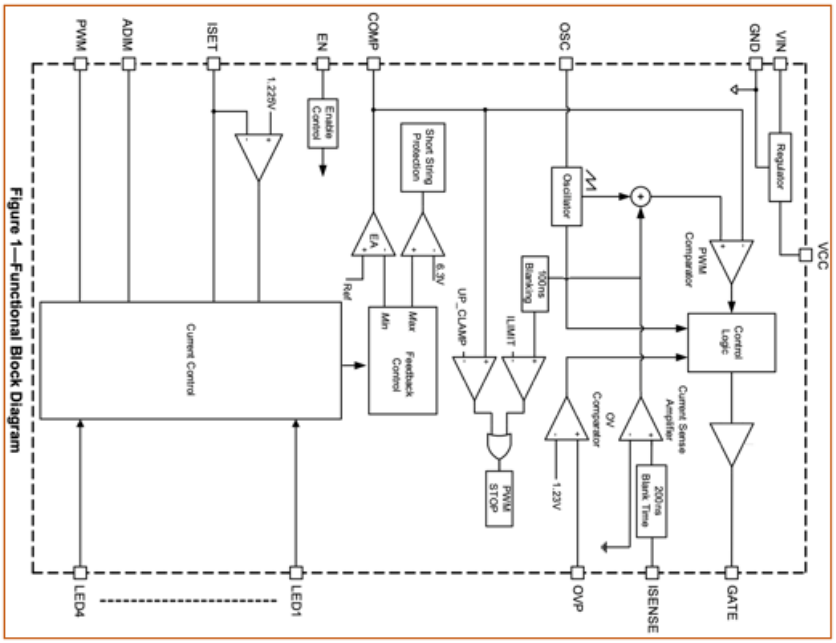

Output current detecting section

115. The products accused of infringing the ’830 patent comprise a current command section that specifies a reference value of a drive current which is applied to the semiconductor light source. An examination of Innolux’s products accused of infringing the ’830 patent reveals this. For example, Innolux’s power supply board model no. TPD MT5583T.PA561 comprising an MPS3398A chipset is configured in such a manner.

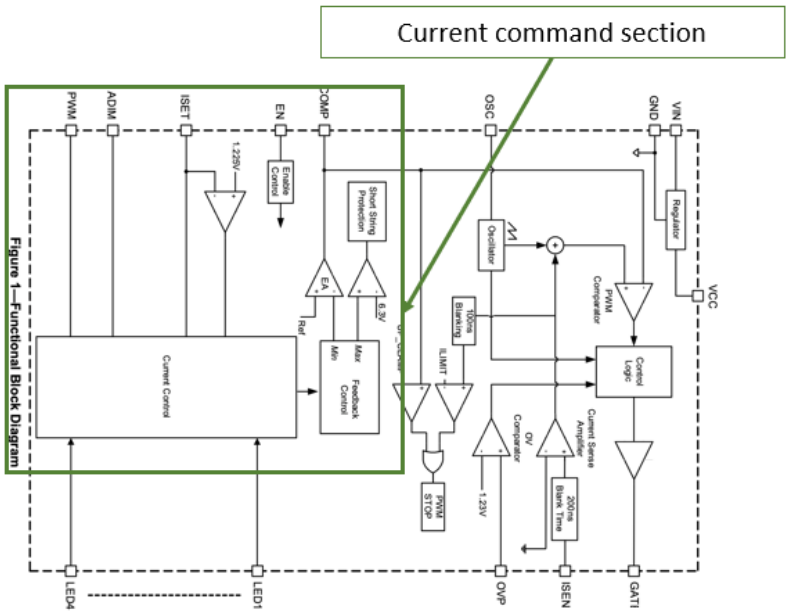

116. The products accused of infringing the ’830 patent comprise a current command section that specifies a reference value of a drive current which is applied to the semiconductor light source. An examination of Innolux’s products accused of infringing the ’830 patent reveals this. For example, Innolux’s power supply board model no. TPD MT5583T.PA561, comprising an MPS3398A chipset, includes a 4 channel LED controller with a reference value for Iset.

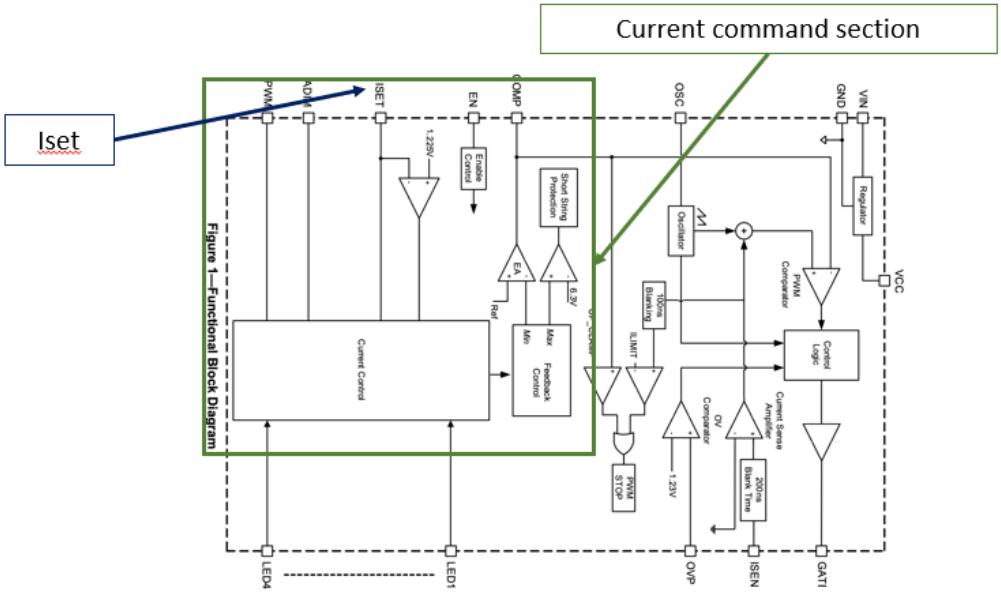

117. The products accused of infringing the ’830 patent comprise a current comparing section that compares the output current detected by the output current detecting section and the reference value specified by the current command section. An examination of Innolux’s products accused of infringing the ’830 patent reveals this. For example, Innolux’s power supply board model no. TPD MT5583T.PA561, comprising an MPS3398A chipset, includes a 4 channel LED controller with a reference used in a comparator.

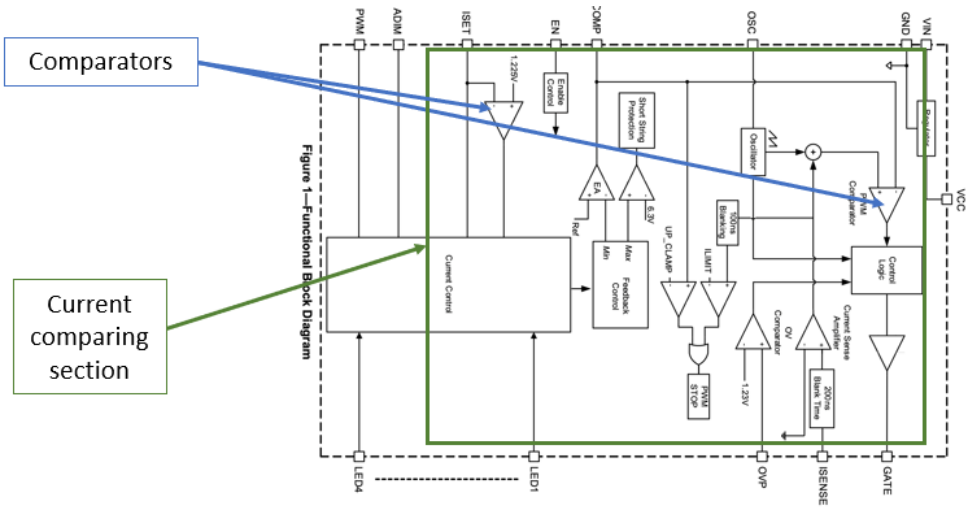

118. The products accused of infringing the ’830 patent comprise an impedance detecting section that detects an impedance of the semiconductor light source. An examination of Innolux’s products accused of infringing the ’830 patent reveals this. For example, Innolux’s power supply board model no. TPD MT5583T.PA561, comprising an MPS3398A chipset, comprises feedback control, such that a detected current is a function of the LED impedance and is detected by the feedback control block.

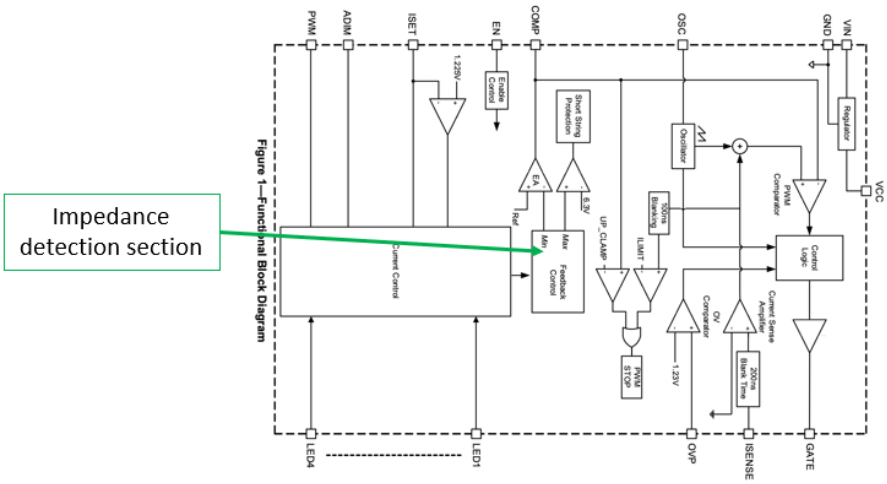

119. The products accused of infringing the ’830 patent are configured such that the output voltage controlling section controls the output voltage of the voltage source based on an output of the current comparing section and an output of the impedance detecting section. An

examination of Innolux's products accused of infringing the '830 patent reveals this. For example, Innolux's power supply board model no. TPD MT5583T.PA561, comprising an MPS3398A chipset, is configured such that the output voltage controlling section utilizes output from both the current comparing section and the impedance detecting section to control output voltage of the voltage source, such as via control logic.

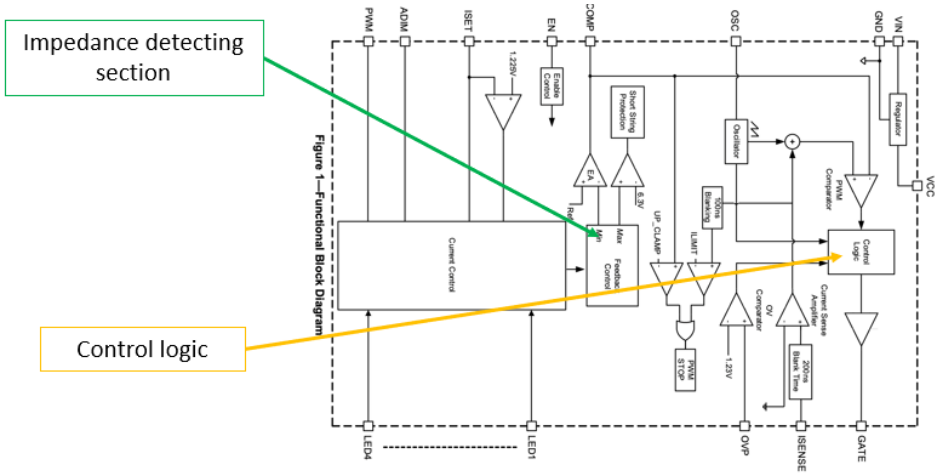

120. At a minimum, Defendant has known of the '830 patent at least as early as the filing date of the original complaint. On information and belief, Defendant has known about the '830 patent since at least February 8, 2017, when Defendant received notice of its infringement from a former patent owner Godo Kaisha IP Bridge 1. On information and belief, Defendant has known about the '830 patent since at least April 18, 2017, when Defendant received notice of its infringement from a former patent owner Godo Kaisha IP Bridge 1. Furthermore, Defendant has known about the '830 patent since at least July 29, 2020, when Defendant again received notice of its infringement.

INDIRECT INFRINGEMENT (35 U.S.C. §271(b))

121. On information and belief, since at least the above-mentioned dates when Innolux was on notice of its infringement, Innolux has actively induced, under U.S.C. § 271(b), its distributors, customers, subsidiaries, importers, testing outfits, and/or consumers that import, use,

purchase, offer to sell, or sell the Accused Products comprising all of the limitations of one or more claims of the ’830 patent to directly infringe one or more claims of the ’830 patent by using, offering for sale, selling, and/or importing the Accused Products. Since at least the notice provided on the above-mentioned dates, Innolux does so with knowledge, or with willful blindness of the fact, that the induced acts constitute infringement of the ’830 patent. Innolux intends to cause, and has taken affirmative steps to induce infringement by its distributors, importers, testing outfits, customers, subsidiaries, and/or consumers by at least, inter alia, creating advertisements that promote the infringing use of the Accused Products, creating and/or maintaining established distribution channels for the Accused Products into and within the United States, manufacturing the Accused Products in conformity with U.S. laws and regulations, distributing or making available instructions or manuals for these products to purchasers and prospective buyers, testing and certifying features related to infringing features in the Accused Products, and/or providing technical support, replacement parts, or services for these products to these purchasers in the United States.

122. On information and belief, despite having knowledge of the ’830 patent and its infringement, Innolux specifically intended for others to import and sell products accused of infringing the ’830 patent. For example, Innolux specifically intended for its U.S.-based subsidiaries or customers to import and sell products accused of infringing the ’830 patent. On information and belief, Defendant instructs and encourages the importers to import and/or sell products accused of infringing the ’830 patent. On information and belief, the purchase and sale agreements between Innolux and the importers provide such instruction and/or encouragement. Further, on information and belief, Innolux’s U.S.-based subsidiaries exist for inter alia, the

purpose of importing and selling products accused of infringing the ’830 patent in the United States.

123. Upon information and belief, despite having knowledge of the ’830 patent and knowledge that it is directly and/or indirectly infringing one or more claims of the ’830 patent, Defendant has nevertheless continued its infringing conduct and disregarded an objectively high likelihood of infringement. Defendant’s infringing activities relative to the ’830 patent have been, and continue to be, willful, wanton, malicious, in bad-faith, deliberate, consciously wrongful, flagrant, and an egregious case of misconduct beyond typical infringement such that Plaintiff is entitled under 35 U.S.C. § 284 to enhanced damages up to three times the amount found or assessed.

124. Plaintiff has been damaged as a result of Defendant’s infringing conduct described in this Count. Defendant is, thus, liable to Plaintiff in an amount that adequately compensates Plaintiff for Defendant’s infringements, which, by law, cannot be less than a reasonable royalty, together with interest and costs as fixed by this Court under 35 U.S.C. § 284.

125. Plaintiff has complied with the requirements of 35 U.S.C. § 287, to the extent necessary and/or applicable, and is entitled to collect pre- and post-filing damages for Defendant’s infringements of the ’830 patent.

COUNT VI
(Infringement of U.S. Patent No. 7,414,682)

126. Plaintiff incorporates paragraphs 1 through 125 herein by reference.

127. This cause of action arises under the patent laws of the United States, and in particular, 35 U.S.C. §§ 271, *et seq*.

128. Plaintiff is the owner of the ’682 patent with all substantial rights to the ’682 patent including the exclusive right to enforce, sue, and recover damages for past and future infringement.

129. The ’682 patent is valid, enforceable and was duly issued in full compliance with Title 35 of the United States Code.

DIRECT INFRINGEMENT (35 U.S.C. §271(a))

130. Defendant has and continues to infringe literally, and/or under the Doctrine of Equivalents, one or more claims of the ’682 patent in this judicial district and elsewhere in Texas and the United States.

131. Innolux directly infringes the ’682 patent via 35 U.S.C. § 271(a) by making, offering for sale, using, testing, selling, and/or importing those Accused Products, their components and processes, and/or products containing the same that incorporate the fundamental technologies covered by the ’682 patent. For example, Innolux directly infringes the ’682 patent by offering for sale, selling, and/or importing those Accused Products, their components and processes, and/or products containing the same that incorporate the fundamental technologies covered by the ’682 patent, to its alter egos, agents, intermediaries, distributors, importers, customers, subsidiaries, and/or consumers. Furthermore, on information and belief, Innolux sells and makes the Accused Products outside of the United States, delivers those products to its customers, distributors, and/or subsidiaries in the United States, or in the case that it delivers the Accused Products outside of the United States it does so intending and/or knowing that those products are destined for the United States and/or designing those products for sale in the United States, thereby directly infringing the ’682 patent. *See, e.g., Lake Cherokee Hard Drive Techs., L.L.C. v. Marvell Semiconductor, Inc.*, 964 F. Supp. 2d 653, 658 (E.D. Tex. 2013). Furthermore, Innolux directly infringes the ’682 patent through its direct involvement in the activities of its subsidiaries, including Innocare and INXUSA, including by selling and offering for sale the Accused Products directly to such subsidiaries and importing the Accused Products into the United

States for such subsidiaries. Such subsidiaries conduct activities that constitute direct infringement of the ’682 patent under 35 U.S.C. § 271(a) by making, using, testing, offering for sale, selling, and/or importing those Accused Products. On information and belief, Innolux offers for sale, sells, and imports the Accused Products within the U.S. to, for example, its distributors, customers, subsidiaries, importers, and/or consumers. Further, Innolux is vicariously liable for this infringing conduct of its U.S.-based subsidiaries, e.g., Innocare and INXUSA, (under both the alter ego and agency theories) because, as an example and on information and belief, Innolux and its U.S.-based subsidiaries are essentially the same company, and Innolux has the right and ability to control its subsidiaries infringing acts and receives a direct financial benefit from the infringement of its U.S.-based subsidiaries, e.g., Innocare and INXUSA.

132. Innolux infringes claim 1 of the ’682 patent. The products accused of infringing the ’682 patent comprise a liquid crystal display of transversal electric field type. For example, Innolux’s TFT-LCD model no. V236BJ1-D03, which is used in products such as the Vizio TV model number D24h – J09, includes an LCD display of transversal electric field type and LCM label.

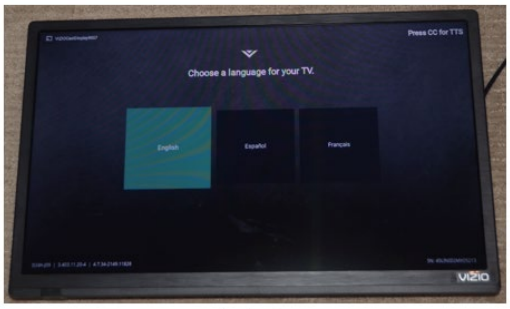

LCM label

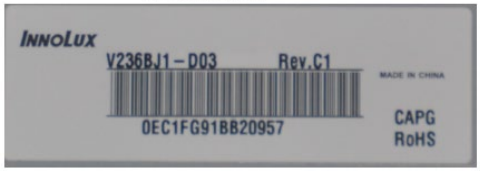

133. The products accused of infringing the ’682 patent comprise a liquid crystal panel in which liquid crystal is retained between a pair of substrates. For example, Innolux’s TFT-LCD model no. V236BJ1-D03 includes an array substrate, an opposing substrate, and liquid crystal formed between the array and opposing substrates:

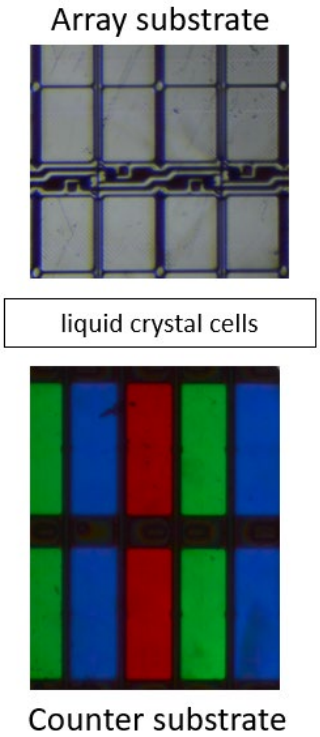

134. The products accused of infringing the ’682 patent comprise a plurality of scanning signal lines and a plurality of video signal lines formed so as to define a plurality of pixels in a matrix on an inner surface of one of the pair of substrates. An examination of Innolux’s TFT-LCD model no. V236BJ1-D03 demonstrates this:

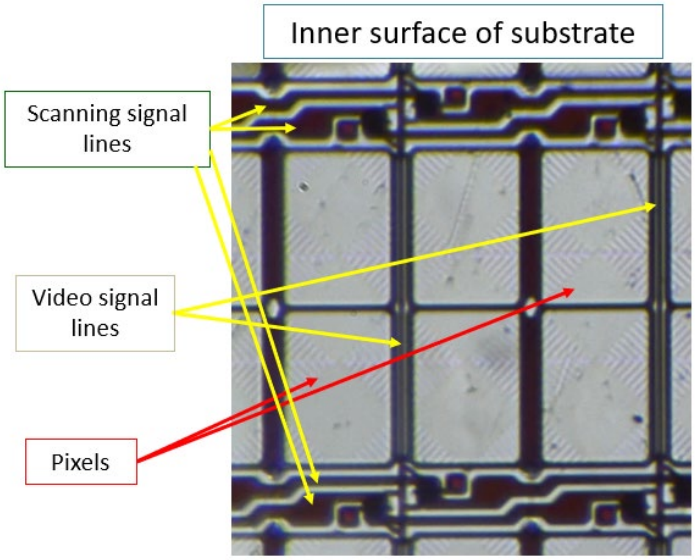

135. The products accused of infringing the ’682 patent comprise a pixel electrode and a common electrode formed opposite to each other in each pixel in a plan view. An examination of Innolux’s TFT-LCD model no. V236BJ1-D03 demonstrates this:

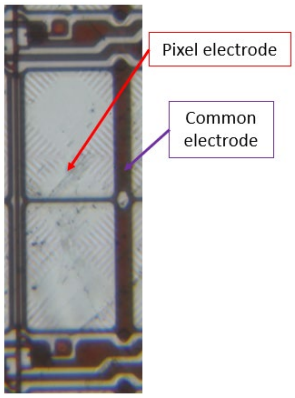

136. The products accused of infringing the ’682 patent are configured such that an image is displayed on the liquid crystal panel by inputting a video signal from the video signal line into the pixel electrode while sequentially selecting the pixel through the scanning signal line. An examination of Innolux’s TFT-LCD model no. V236BJ1-D03 demonstrates this:

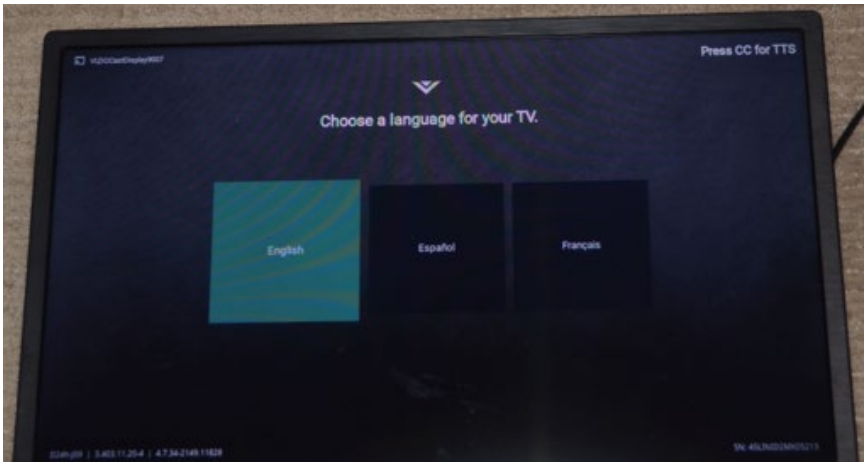

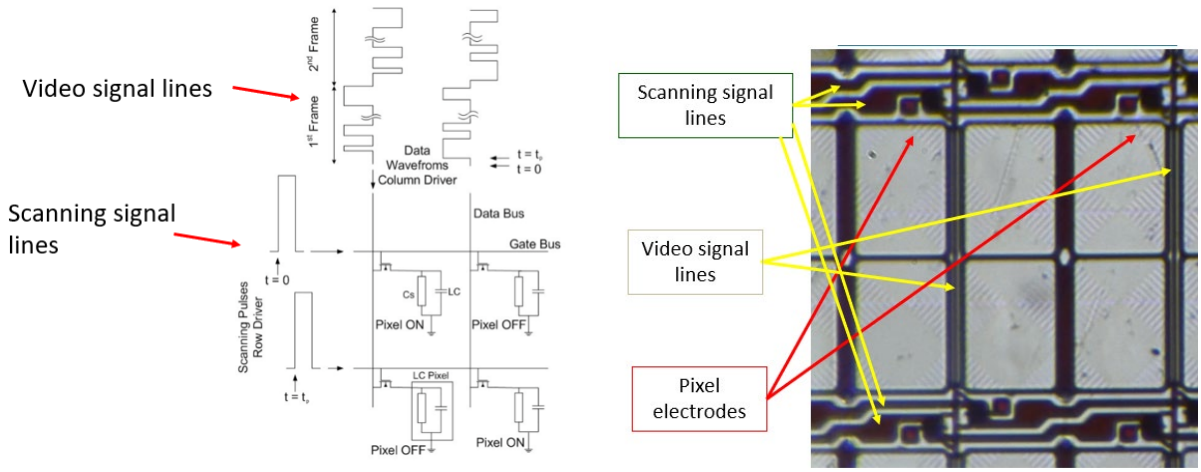

https://www.intechopen.com/books/new-developments-in-liquid-crystals/active-matrix-liquid-crystal-displays-operation-electronics-and-analog-circuits-design

137. The products accused of infringing the '682 patent are configured such that at least one of the scanning signal lines, the video signal lines, the pixel electrode, or the common electrode is at least partially constituted by a light-transmitting conductive layer and a light-non-transmitting conductive layer. An examination of Innolux's TFT-LCD model no. V236BJ1-D03 demonstrates this:

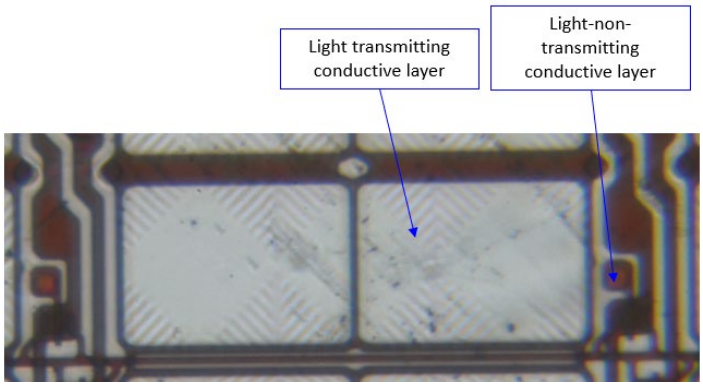

138. The products accused of infringing the ’682 patent are configured such that a width of the light-transmitting conductive layer is wider than a width of the light-non-transmitting layer. An examination of Innolux’s TFT-LCD model no. V236BJ1-D03 demonstrates this:

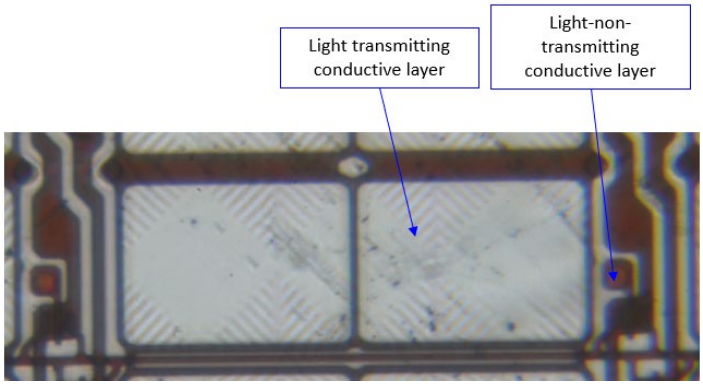

139. At a minimum, Defendant has known of the ’682 patent at least as early as the filing date of the original complaint. Additionally, Defendant has known about the ’682 patent since at least February 8, 2017, when Defendant received notice of its infringement from a former patent owner Godo Kaisha IP Bridge 1. In addition, Defendant has known about the ’682 patent since at least April 18, 2017, when Defendant received notice of its infringement from a former patent owner Godo Kaisha IP Bridge 1. Furthermore, Defendant has known about the ’682 patent since at least July 29, 2020, when Defendant again received notice of its infringement.

INDIRECT INFRINGEMENT (35 U.S.C. §271(b))

140. On information and belief, since at least the above-mentioned dates when Innolux was on notice of its infringement, Innolux has actively induced, under U.S.C. § 271(b), its distributors, customers, subsidiaries, importers, testing outfits, and/or consumers that import, use, purchase, offer to sell, or sell the Accused Products comprising all of the limitations of one or more claims of the ’682 patent to directly infringe one or more claims of the ’682 patent by using, offering for sale, selling, and/or importing the Accused Products. Since at least the notice provided on the above-mentioned dates, Innolux does so with knowledge, or with willful blindness of the fact, that the induced acts constitute infringement of the ’682 patent. Innolux intends to cause, and has taken affirmative steps to induce infringement by its distributors, importers, testing outfits, customers, subsidiaries, and/or consumers by at least, inter alia, creating advertisements that promote the infringing use of the Accused Products, creating and/or maintaining established distribution channels for the Accused Products into and within the United States, manufacturing the Accused Products in conformity with U.S. laws and regulations, distributing or making available instructions or manuals for these products to purchasers and prospective buyers, testing and certifying features related to infringing features in the Accused Products, and/or providing technical support, replacement parts, or services for these products to these purchasers in the United States.

141. On information and belief, despite having knowledge of the ’682 patent and its infringement, Innolux specifically intended for others to import and sell products accused of infringing the ’682 patent. For example, Innolux specifically intended for its U.S.-based subsidiaries or customers to import and sell products accused of infringing the ’682 patent. On information and belief, Defendant instructs and encourages the importers to import and/or sell

products accused of infringing the ’682 patent. On information and belief, the purchase and sale agreements between Innolux and the importers provide such instruction and/or encouragement. Further, on information and belief, Innolux’s U.S.-based subsidiaries exist for inter alia, the purpose of importing and selling products accused of infringing the ’682 patent in the United States.

142. Upon information and belief, despite having knowledge of the ’682 patent and knowledge that it is directly and/or indirectly infringing one or more claims of the ’682 patent, Defendant has nevertheless continued its infringing conduct and disregarded an objectively high likelihood of infringement. Defendant’s infringing activities relative to the ’682 patent have been, and continue to be, willful, wanton, malicious, in bad-faith, deliberate, consciously wrongful, flagrant, and an egregious case of misconduct beyond typical infringement such that Plaintiff is entitled under 35 U.S.C. § 284 to enhanced damages up to three times the amount found or assessed.

143. Plaintiff has been damaged as a result of Defendant’s infringing conduct described in this Count. Defendant is, thus, liable to Plaintiff in an amount that adequately compensates Plaintiff for Defendant’s infringements, which, by law, cannot be less than a reasonable royalty, together with interest and costs as fixed by this Court under 35 U.S.C. § 284.

144. Plaintiff has complied with the requirements of 35 U.S.C. § 287, to the extent necessary and/or applicable, and is entitled to collect pre- and post-filing damages for Defendant’s infringements of the ’682 patent.

CONCLUSION

145. Plaintiff is entitled to recover from Defendant the damages sustained by Plaintiff as a result of the Defendant’s wrongful acts in an amount subject to proof at trial, which,

by law, cannot be less than a reasonable royalty, together with interest and costs as fixed by this Court.

146. Plaintiff has incurred and will incur attorneys' fees, costs, and expenses in the prosecution of this action. The circumstances of this dispute may give rise to an exceptional case within the meaning of 35 U.S.C. § 285, and Plaintiff is entitled to recover its reasonable and necessary attorneys' fees, costs, and expenses.

JURY DEMAND

Plaintiff requests a trial by jury pursuant to Rule 38 of the Federal Rules of Civil Procedure.

PRAYER FOR RELIEF

Plaintiff asks that the Court find in its favor and against Defendant and that the Court grant Plaintiff the following relief:

1. A judgment that Defendant has infringed the Asserted Patents as alleged herein, directly and/or indirectly by way of inducing infringement of such patents;
2. A judgment for an accounting of all damages sustained by Plaintiff as a result of the acts of infringement by Defendant;
3. A judgment and order requiring Defendant to pay Plaintiff damages under 35 U.S.C. § 284, including up to treble damages as provided by 35 U.S.C. § 284, and any royalties determined to be appropriate;
4. A judgment and order requiring Defendant to pay Plaintiff pre-judgment and post-judgment interest on the damages awarded;
5. A judgment and order finding this to be an exceptional case and requiring Defendant to pay the costs of this action (including all disbursements) and attorneys' fees as provided by 35 U.S.C. § 285; and

6. Such other and further relief as the Court deems just and equitable.

Dated: October 3, 2022

Respectfully submitted,

/s/ *Patrick J. Conroy*
Patrick J. Conroy
Texas Bar No. 24012448
Justin Kimble
Texas Bar No. 24036909
T. William Kennedy Jr.
Texas Bar No. 24055771
Jon Rastegar
Texas Bar No. 24064043
Nelson Bumgardner Conroy PC
2727 North Harwood Street
Suite 250
Dallas, TX 75201
Tel: (214) 446-4950
pat@nelbum.com
justin@nelbum.com
bill@nelbum.com
jon@nelbum.com

John P. Murphy
Texas Bar No. 24056024
Nelson Bumgardner Conroy PC
3131 W 7th St
Suite 300
Fort Worth, TX 76107
Tel: (817) 806-3808
murphy@nelbum.com

Attorneys for Plaintiff
BISHOP DISPLAY TECH LLC