IN THE UNITED STATES DISTRICT COURT
FOR THE NORTHERN DISTRICT OF OHIO

SANASTAR, INC., d/b/a WIZKID PRODUCTS a Florida Corporation, Plaintiff, v. FRESH PRODUCTS LLC, an Ohio Limited Liability Company, Defendant.	**CIVIL ACTION NO.: 25-cv-00418** **JURY TRIAL DEMANDED**

COMPLAINT

Plaintiff, SANASTAR, INC., d/b/a WIZKID PRODUCTS ("WizKid" or "Plaintiff"), a Florida corporation, by and through the undersigned, hereby files this Complaint for patent infringement against FRESH PRODUCTS LLC ("Fresh Products" or "Defendant"), an Ohio Limited Liability Company, and, in so doing, states as follows:

JURISDICTION, VENUE, AND THE PARTIES

1. This is an action brought pursuant to the Patent Laws of the United States, 35 U.S.C. §§ 271, *et seq.*

2. This Court has original jurisdiction pursuant to Title 28, United States Code, Sections 1331 and 1338, as this case involves patent infringement and federal questions arising under the Constitution, laws, or treaties of the United States.

3. At all times material hereto, WizKid had and has its principal address located in Fort Lauderdale, Florida.

4. At all times material hereto, Fresh Products has and had its principal place of business in Perrysburg, Ohio.

Fresh Products Ex. 1002
IPR Petition - USP 10,036,154

5. This action arises as a result of the infringing conduct of Defendant, which implicates interstate commerce.

6. Venue is proper in the Northern District of Ohio pursuant to 28 U.S.C. §§ 1391(b) and (c) because Fresh Products "resides" in this judicial district, as the term "reside" is interpreted under Chapter 87 of the United States Code, and because a substantial part of the events giving rise to the infringement claims at issue occurred within this judicial district. Venue is also appropriate pursuant to 28 U.S.C. § 1400(b), which provides, in part, that "[a]ny civil action for patent infringement may be brought in the judicial district where the defendant resides."

7. All conditions precedent have been met, waived, and/or satisfied to bring this lawsuit.

GENERAL ALLEGATIONS

WIZKID AND ITS INNOVATIVE PRODUCTS

8. WizKid is a Florida based company and the owner of the federally registered WIZKID trademark (the "WizKid Mark"), and uses said mark to market and sell its products throughout the United States.

9. To this end, WizKid, together with its dedicated team of innovators, has been researching and developing cutting-edge sanitary and antimicrobial products for more than two decades. Since the commencement of such innovative efforts, WizKid's focus has remained on eliminating the negative connotation associated with using public restrooms by introducing products that help protect persons from the filth and grime that everyone inevitably encounters. Indeed, a core of WizKid's mission has been to develop innovative products and solutions that address issues often overlooked in a public restroom setting.

10. Much of WizKid's vision has been borne through its Founders, Dean Stickler ("Stickler") and Jeff Crevier ("Crevier"). As an already successful businessman, Stickler grew tired of seeing a puddle of urine on the floor surrounding the urinals located in his office's bathroom, and desired to find a way to eliminate the issue. By this point, Stickler noticed that antimicrobials had become commonplace in sanitary products and envisioned a way to infuse them into a urinal mat that would be placed directly beneath a urinal.

11. Soon thereafter, Stickler and Crevier began to work together to develop a mat that could resolve these concerns.

12. The pair immediately undertook research and development to find a solution not only for Stickler and his office, but for men everywhere. Indeed, Crevier spent countless hours finding the perfect answer for this nasty pervasive problem.

13. Finally, a breakthrough occurred. After two years researching different fibers, antimicrobials, types of backing, and manufacturing processes, WizKid settled on what they believed to be the perfect product: the Original Antimicrobial Mat.

14. Eventually, a patent was obtained for the first-of-its-kind antimicrobial urinal mat, and Stickler and Crevier thereafter formed WizKid in September 2004, quickly followed by the introduction of the Original Antimicrobial Mat.

15. Early on, WizKid had a small operation, with Crevier at the helm to actively develop improvements to the product while pioneering this brand-new market.

16. As the market caught wind of this revolutionary product, orders began to overwhelm WizKid. This success brought a new issue, however—the need for greater space. To this end, WizKid sought a location to call its headquarters and that would fit the booming growth

WizKid was experiencing. Eventually, WizKid found its home in a warehouse located in Dalton, Georgia.

17. Continuing its innovation, WizKid constantly researched the market to address issues it perceived as going unchecked or that had subpar solutions. However, it was not just its research that WizKid relied on—Crevier's own personal experiences also continued to drive WizKid's innovation. As such, Crevier, through WizKid, set out to eliminate what he identified as the most important issue during the development of the Original Antimicrobial Mat: the obnoxious splash-back men experience when using a urinal.

18. Crevier noticed that, despite whichever urinal screen he came across and all of their claims to "eliminate splash-back," he would still walk away from the experience with the real potential that splash-back would soil the shoes and pants of the urinal user. To this end, Crevier envisioned a screen that not only covered the bottom of a urinal, but extended up the backwall of the urinal to completely eliminate the grotesque splash-back. Keeping in line with that vision, WizKid expanded its product line by introducing the innovative and revolutionary Splash Hog Vertical Urinal Screen ("Splash Hog") in 2016, which became available for public purchase in early 2017.

19. The revolutionary Splash Hog was designed to fit the length of the urinal, included a portion that extended up the back of the urinal, while simultaneously including an attached base which covered the bottom, flat part of the urinal where water and waste collect. Additionally, the Splash Hog included longer hedge-hog like protrusions that played a crucial role—a nearly-complete elimination of splash back. With all of these features embodied in one product, someone using a urinal would rarely have to worry about a ruined experience.

Fresh Products Ex. 1002
IPR Petition - USP 10,036,154

20. Crevier's innovation and tireless pursuit for success was recognized by the United States Patent and Trademark Office ("USPTO") when it issued U.S. Patent No. 10,036,154 ("the '154 Patent") on July 31, 2018. Plaintiff's innovation did not stop with this, however, as WizKid continued to improve the '154 Patent and, on May 21, 2019, was granted a second patent for the technology in U.S. Patent No. 10,294,649 ("the '649 Patent") (collectively, the "WizKid Patents").

21. The innovative, revolutionary urinal screen provided relief and peace of mind to those who use urinals, including eliminating the worry that splash-back will ruin the user's shoes or other clothing. Not only that, the reduction of the splash back also prevents urine from contaminating the floor with an awful odor, and also prevents deterioration of the same. With that, WizKid carved out its own space in the sanitary industry with the one-of-a-kind and never-before-seen Splash Hog, and men no longer had to stress over the monotony of a public restroom visit in restrooms where the Splash Hog urinal screen was used.

22. The innovation, dedication, and commitment to providing a pleasurable bathroom experience took nearly two decades of tireless work to turn WizKid into the success it eventually reached. In fact, WizKid's innovative Splash Hog has won numerous awards, including the 2018 and 2019 Reader's Choice Award of *Sanitary Maintenance Magazine* for Favorite Product, and the 2024 Distributor's Choice Award by *Sanitary Maintenance Magazine*.

WIZKID'S INTELLECTUAL PROPERTY

23. WizKid is the owner of the WizKid Patents.

24. As such, WizKid has the exclusive right to, *inter alia*, collect revenues and profits derived from the WizKid Patents, to exclude others from making, using, offering for sale, selling, or importing into the United States any goods that practice the WizKid Patents, as well as controlling all aspects of licensing the aforementioned rights.

Fresh Products Ex. 1002
IPR Petition - USP 10,036,154

25. To that end, WizKid does not license any rights afforded by the WizKid Patents to any other entity.

26. In an effort to protect its intellectual property, WizKid marks its Splash Hog with a marking imprint informing customers and potential customers of the specific patent(s) associated with the Splash Hog.

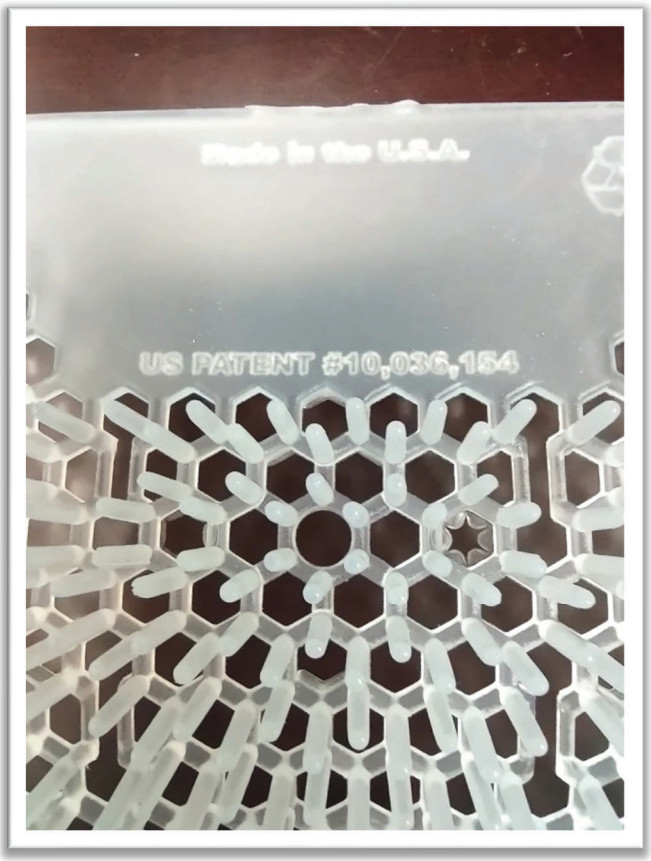

FRESH PRODUCTS' MANUFACTURING HISTORY AND INFRINGEMENT OF THE WIZKID PATENTS

27. Fresh Products is the largest direct competitor of WizKid, having been in the business of manufacturing and selling odor control, sanitary, and urinal screen products throughout the world since 1971.

28. Fresh Products was not always WizKid's direct competitor, however.

29. When the Splash Hog was first introduced, WizKid relied on manufacturers in China, which meant WizKid was forced to pay shipping and importing fees. Hoping to eliminate

those costs, and wanting to support domestic manufacturers, WizKid contacted Fresh Products to inquire on a potential manufacturing arrangement in 2015.

30. Nearly a year later, WizKid formally engaged Fresh Products and provided instructions and designs for tooling a new mold that included the unique features Crevier developed, and which also featured a more contemporary look. This formal engagement was memorialized on or around April 20, 2016 when Fresh Products became the official contract manufacturer of the Splash Hog, and other WizKid products. *See* ***Exhibit 1***, 2016 Manufacturing Agreement ("2016 Manufacturing Agreement"), which is attached hereto and incorporated by reference.

31. During the time that Fresh Products was manufacturing the Splash Hog, the USPTO issued the '154 Patent on July 31, 2018. Based on this, and desirous of a more robust manufacturing agreement, WizKid drafted a new manufacturing agreement, which WizKid and Fresh Products executed on December 1, 2018. *See* ***Exhibit 2***, 2018 Manufacturing Agreement ("2018 Manufacturing Agreement"), which is attached hereto and incorporated by reference.

32. In response to the issuance of the '154 Patent and at the specific direction of WizKid, Fresh Products began marking WizKid's Splash Hog urinal screens with the '154 Patent number. This agreement persisted through the issuance of the '649 Patent, which the USPTO issued on May 21, 2019.

33. To this end, the Parties discussed manufacturing the Splash Hog according to the '154 Patent and subsequently reduced those discussions to writing in the 2018 Manufacturing Agreement. The 2018 Manufacturing Agreement outlined the Parties' rights and obligations, and specifically included a provision that restricted Fresh Products' use of WizKid's intellectual property so that "Manufacturer may not use any of WizKid's Background Intellectual Property

Rights other than to produce and supply Products to WizKid hereunder[.]" ***Exhibit 2***, ¶ 14.1(b) (defining "Background Intellectual Property Rights" as "Intellectual Property, as applicable, except for any "Foreground Intellectual Property Rights," with "Foreground Intellectual Property Rights" defined as "any and all of the Intellectual Property Rights developed with respect to, or for incorporation into, the Products, that are either developed by WizKid alone, by WizKid and Manufacturer jointly or by Manufacturer alone as requested by WizKid in connection with this Agreement[,]" the Agreement subsequently requiring Manufacturer to "assign[] to WizKid all of Manufacturer's right, title and interest in and to all Foreground Intellectual Property Rights").

34. At first, the Parties' relationship was one to be envied. As WizKid continued to grow, Fresh Products enjoyed the success that flowed naturally therefrom. Indeed, as WizKid saw increases in annual sales, Fresh Products saw increases in orders from WizKid. This symbiotic relationship worked for a few years, and neither party complained about any of its obligations or rights and restrictions under the Manufacturing Agreement.

35. As time progressed, however, WizKid began experiencing several issues with Fresh Products, including, *inter alia*: (i) the quality of products received from Fresh Products began to sharply decline, (ii) Fresh Products often missed delivery deadlines, and (iii) the high costs Fresh Products charged to manufacture did not track. The culmination of these issues resulted in WizKid falling short (through no fault of its own) of its order fulfilment and delivery obligations, which caused tensions between WizKid and its customers. As a result, WizKid was forced to cut ties with Fresh Products in 2021 and began manufacturing the Splash Hog in its Dalton, GA warehouse.

36. Thereafter, having already watched WizKid's successes from the introduction of the revolutionary Splash Hog, Fresh Products grew envious that it was now completely missing out on this market and needed a way to capture WizKid's clientele. To this end, Fresh Products

began developing a knock-off version of the Splash Hog without any warning or permission from WizKid.

37. In 2023, Fresh Products introduced the Tsunami anti-splash device. The Tsunami *drastically* resembled the Splash Hog, even down to the most minute of details, and it became obvious that Fresh Products improperly implemented the technology protected by the WizKid Patents. In fact, in all relevant respects, the Tsunami is identical to the Splash Hog. For instance, the Tsunami copied the Splash Hog's design whereby the Tsunami extends vertically up the urinal and couples to a bottom portion that covers the area of the urinal where water and waste collect, as well as a mechanism to mount the screen to the urinal, as shown below:

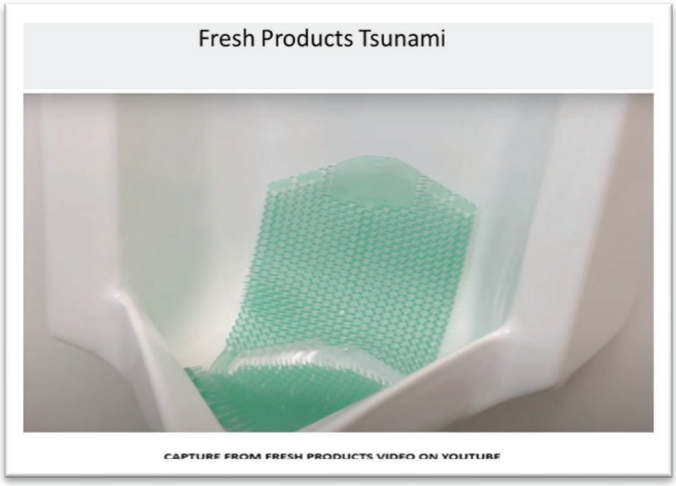

38. As is clear from the foregoing, Fresh Products enjoyed direct access to the WizKid Patents and related products as it served as WizKid's contract manufacturer. In fact, Fresh Products was WizKid's contract manufacturer *before* and *after* the '154 Patent was issued, and was the same for the '649 Patent, both patents which provided the instructions for Fresh Products to follow when manufacturing the original Splash Hog. Additionally, Fresh Products was well aware that the Splash Hog was to be marked (and actually was marked) with the '154 Patent due to its marking

obligations while it served as WizKid's contract manufacturer. To be clear, the only right Fresh Products had to the WizKid Patents was to make the Splash Hog specifically for WizKid. Despite this clarity, however, Fresh Products made a conscious effort to mimic its direct competitor's product by infringing the WizKid Patents and implementing the technology protected therein, in which it was already on notice.

THE WIZKID PATENTS

39. On July 31, 2018, the USPTO issued the '154 Patent, entitled *Urinal Anti-Splash Device*. A true and correct copy of the '154 Patent is attached hereto as ***Exhibit 3*** and incorporated by reference.

40. The '154 Patent describes a urinal anti-splash device whereby the anti-splash device is covered in downward-tapering protrusions that extend out from the urinal screen, and is made of two portions: an upper portion that mounts to the vertical wall of the urinal, and a second portion that is coupled to the upper portion and may extend parallel or perpendicularly from the upper portion, across the bottom floor of the urinal where water and waste collect. *See* ***Exhibit 3***, 10:60–11:12.

41. The '154 Patent includes three independent claims—Claim 1, Claim 11, and Claim 18—which recite:

***

1. A urinal anti-splash device comprising:
an anti-splash body sized and shaped to couple to at least
a portion of a urinal, the anti-splash body including:
a first portion;
a second portion opposite the first portion;
a length extending from the first portion to the second portion; and
an upper surface extending the length;
a base couplable to the first portion and configured to extend in a direction substantially perpendicular from the first portion;

a first plurality of protrusions extending outwardly from the upper surface of the anti-splash body and which taper downwardly in a direction toward the upper surface of the anti-splash body;

a second plurality of protrusions extending outwardly from the base, the second plurality of protrusions configured to extend in the direction substantially perpendicular from the first portion of the anti-splash body.

***

11. A urinal anti-splash device comprising:

an anti-splash body configured to couple to a urinal wall, the anti-splash body including a first portion, a second portion opposite the first portion, and a longitudinal length separating the first portion from the second portion;

a base couplable to the first portion of the anti-splash body, the base sized and shaped to cover at least a portion of a urinal drain;

a coupling region configured to translate the base between a first position including the base oriented in a direction parallel to the anti-splash body and a second position including the base oriented in a direction substantially perpendicular from the base; and

a plurality of protrusions coupled to the anti-splash body and the base.

***

18. A method of mounting a urinal anti-splash device within a urinal comprising:

providing a urinal anti-splash device including:

an anti-splash body sized and shaped to couple to at least a portion of a urinal, the anti-splash body including:

a first portion;

a second portion opposite the first portion;

a longitudinal length extending from the firs portion to the second portion; and

an upper surface extending the longitudinal length;

a base couplable to the first portion and configured to extend in a direction substantially perpendicular from the first portion;

a coupling region disposed between the first portion of the anti-splash body and the base, the coupling region configured to allow the base to be moved from being substantially parallel to the anti-splash body in a first position to a second position substantially perpendicular to the anti-splash body;

a first plurality of protrusions extending outwardly from the upper surface of the anti-splash body; and

a second plurality of protrusions extending outwardly from the base, the second plurality of protrusions configured to extend in the direction substantially perpendicular from the first portion of the anti-splash body;

mounting the anti-splash body within a back wall of a urinal; and
placing the base over a urinal screen.

***

42. In addition to the issuance of the '154 Patent, on May 21, 2019, the USPTO issued the '649 Patent, entitled *Urinal Anti-Splash Device*. A true and correct copy of the '649 Patent is attached hereto as ***Exhibit 4*** and incorporated by reference.

43. The '649 Patent describes a urinal anti-splash device whereby the anti-splash device is covered in downward-tapering protrusions that extend out from the urinal screen, and is made of two portions: an upper portion that mounts to the vertical wall of the urinal, and a second portion that is coupled to the upper portion and may extend parallel or perpendicularly from the base of the upper portion. *See* ***Exhibit 4***, 11:21–38.

44. The '649 Patent also includes three independent claims—Claim 1, Claim 8, and Claim 18—which recite:

***

1. A urinal anti-splash device, comprising:
an anti-splash body configured to be mounted vertically on a back wall of a urinal and having a plurality of protrusions that extend from a front surface of the anti-splash body;
a base attached to the anti-splash body at a coupling region formed between the base and the anti-splash body, the base being configured to cover at least a portion of a urinal drain and having a plurality of protrusions extending away from the base on a surface of the base that is contiguous with the front surface of the anti-splash body;
the coupling region is configured allow the base to move between a first position including the base oriented in a direction parallel to the anti-splash body and a second position including the base oriented in a direction substantially perpendicular from the base.

***

8. A urinal anti-splash device comprising:
an anti-splash body configured to be mounted on a back wall of a urinal, the anti-splash body including a plurality of protrusions extending from a front surface of the

anti-splash body, wherein at least some of the protrusions have a base at the front surface of the anti-splash body that is wider than a top of the protrusion at the opposite end of the protrusion; and

a base that is attached to the anti-splash body and which is configured to extend in a direction substantially perpendicular from the anti-splash body to at least partially cover a drain of a urinal, and which further includes a plurality of protrusions extending outwardly from the base which are arranged to extend in a direction substantially perpendicular to plurality of protrusions of the anti-splash body.

***

18. A method of mounting a urinal anti-splash device within a urinal comprising:

providing a urinal anti-splash device including:

an anti-splash body configured to be mounted on a back wall of a urinal, the anti-splash body including a plurality of protrusions extending from a front surface of the anti-splash body, wherein at least some of the protrusions have a base at the front surface of the anti-splash body that is wider than a top of the protrusion at the opposite end of the protrusion;

a base that is attached to the anti-splash body and which is configured to extend in a direction substantially perpendicular from the first portion to cover a drain of a urinal, and which further includes a plurality of protrusions extending outwardly from the base, the second plurality of protrusions are arranged to extend in a direction substantially perpendicular from plurality of protrusions of the anti-splash body;

mounting the anti-splash body on the back wall of a urinal; and

placing the base over a urinal drain.

***

45. Despite the foregoing issued patents and its unquestionable knowledge thereof, Fresh Products has willfully infringed at least claim 1 of each of said patents in an effort to unlawfully and unfairly compete with WizKid in the competitive industry.

46. Notwithstanding Fresh Products' knowledge of the WizKid Patents from the date each was issued, WizKid delivered a Cease-and-Desist Notice to Fresh Products upon discovering its infringement. Indeed, on October 26, 2023, WizKid delivered a notice to Fresh Products outlining Fresh Products' infringement in a detailed claim chart. Fresh Products responded on November 8, 2023 and January 9, 2024. WizKid subsequently replied on March 6, 2024 and April

23, 2024 with a further breakdown of Fresh Products' infringement. Despite this, Fresh Products continues its infringement of the WizKid Patents by continuing to manufacture, distribute, and sell the Fresh Products Tsunami. *See* ***Exhibit 5***, WizKid Cease and Desist, and Fresh Products' Response thereto.

47. As such, WizKid has been required to retain the undersigned counsel to pursue their interests in this matter, and is obligated to pay the undersigned a reasonable attorneys' fee for their services and to reimburse the undersigned for any costs incurred in connection with said representation.

COUNT ONE
INFRINGEMENT OF THE '154 PATENT

48. WizKid re-alleges and re-asserts Paragraphs One (1) through Forty-Seven (47) of the instant Complaint as if fully set forth herein.

49. Fresh Products has made, used, sold, offered for sale, and/or imported urinal anti-splash devices, including the infringing Tsunami anti-splash urinal screen, that practices at least claim 1 of the '154 Patent. Such unlawful conduct continues as of the filing of this Complaint.

50. Specifically, the infringing Tsunami product meets all limitations of at least Claim 1 of the '154 Patent.

51. As more particularly set forth above, Claim 1 of the '154 Patent recites a "urinal anti-splash device" comprising "an anti-splash body sized and shaped to couple to at least a portion of a urinal, the anti-splash body . . ."

52. Likewise, the infringing Tsunami "includ[es]; a first portion; a second portion opposite the first portion; a length extending from the first portion to the second portion; and an upper surface extending the length;" a representative image of which is displayed below:

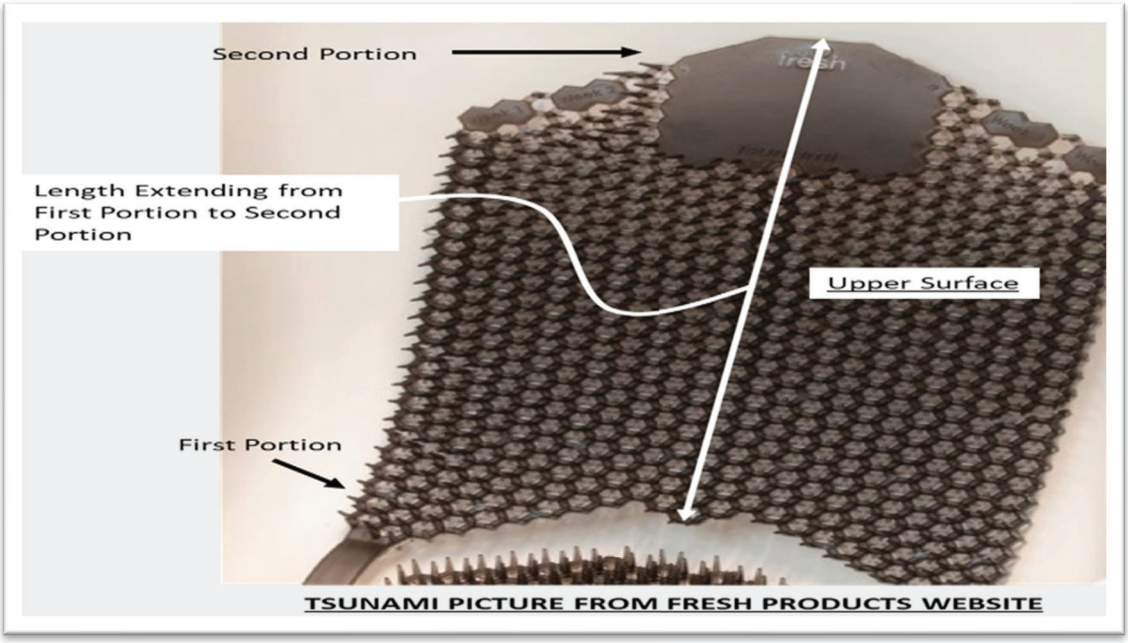

53. Additionally, as required by the '154 Patent, the Tsunami contains "a base couplable to the first portion and configured to extend in a direction substantially perpendicular from the first portion;" To this end, the Tsunami includes a base couplable to the first portion, and extends substantially perpendicular therefrom.

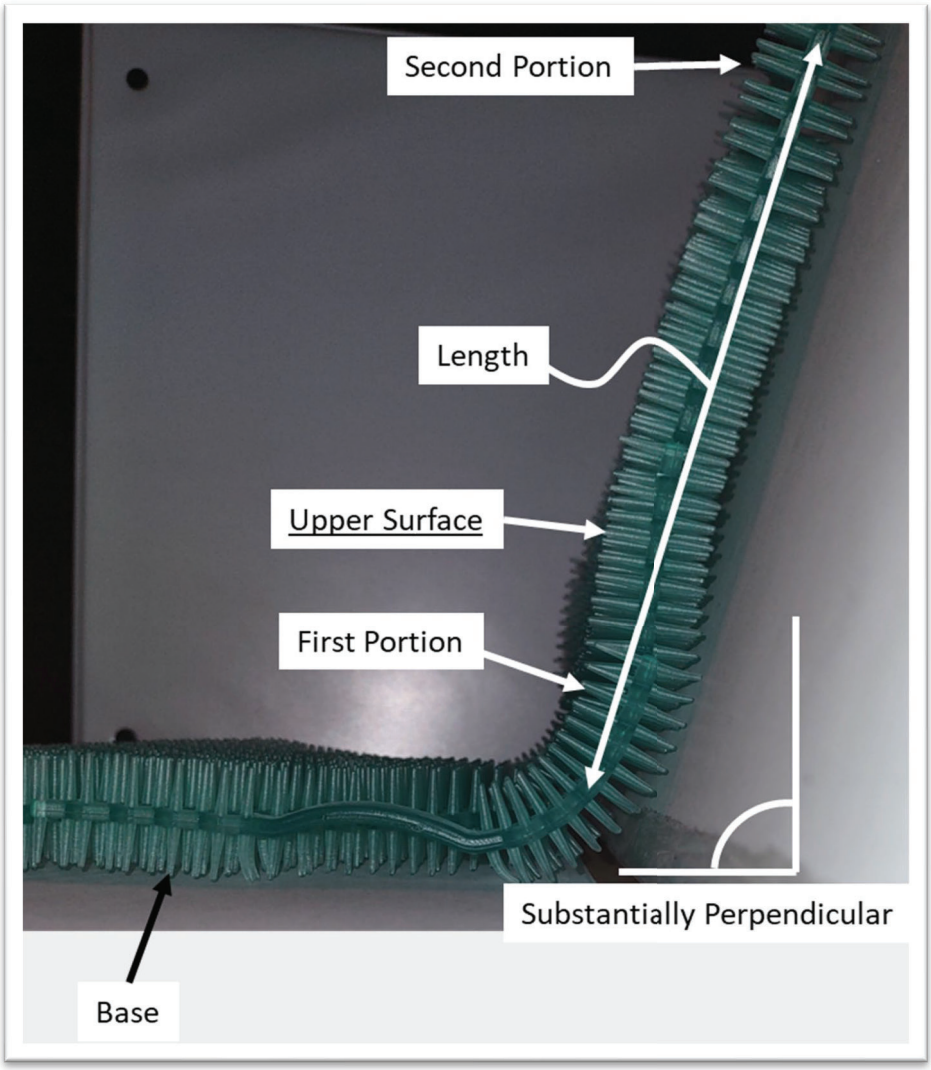

54. Claim 1 of the '154 Patent further requires "a first plurality of protrusions extending outwardly from the upper surface of the anti-splash body and which taper downwardly in a direction toward the upper surface of the anti-splash body; and a second plurality of protrusions extending outwardly from the base, the second plurality of protrusions configured to extend in the direction substantially perpendicular from the first portion of the anti-splash body." All of the foregoing elements are contained in the infringing Tsunami product marketed and sold by Fresh Products, and as shown below.

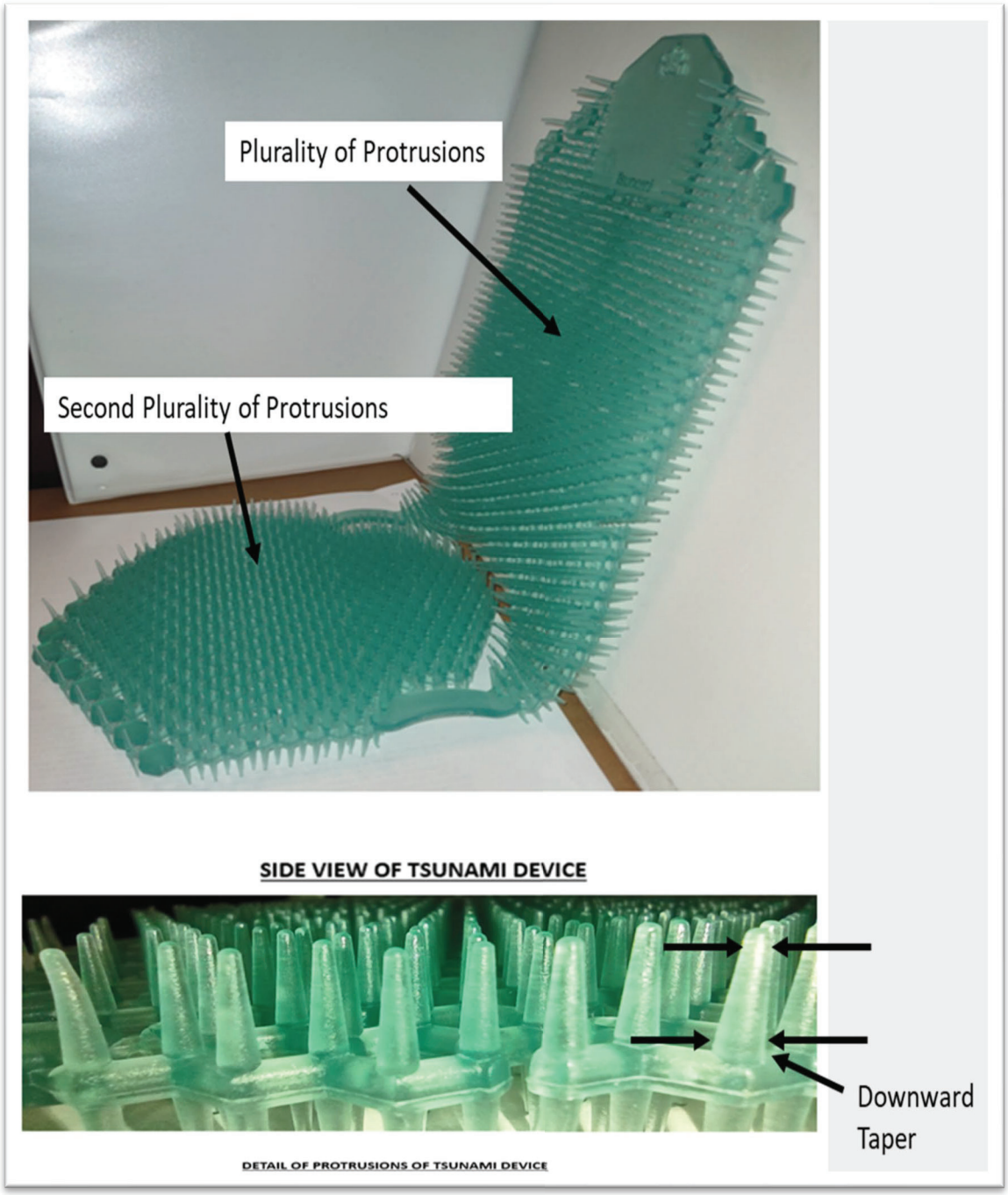

55. By making, using, selling, offering for sale, and/or importing into the United States the infringing Tsunami product, Fresh Products has infringed, and continues to infringe, at least claim 1 of the '154 Patent literally, *and at an absolute minimum*, under the doctrine of equivalents.

56. Fresh Products has knowledge of the ’154 Patent at least because Fresh Products was once WizKid’s contract manufacturer of the Splash Hog and enjoyed direct access to the ’154 Patent, and also because of WizKid’s regular and consistent marking of its own products pursuant to 35 U.S.C. § 287(a). Additionally, WizKid delivered a Cease-and-Desist demand, accompanied by a detailed claim chart, on October 26, 2023. Fresh Products responded on November 8, 2023 and January 9, 2024. WizKid subsequently replied on March 6, 2024 and April 23, 2024 with a further breakdown of Fresh Products’ deliberate infringement. Despite Fresh Products’ knowledge of the ’154 Patent and its infringing activities, Fresh Products has infringed, and continues to infringe, at least claim 1 of the ’154 Patent by manufacturing, selling, and/or offering for sale the Fresh Products infringing Tsunami product. This intentional infringement without regard for WizKid’s patent rights constitutes egregious conduct sufficient to establish willful infringement under 35 U.S.C. § 284.

57. The ongoing and continuous infringement by Fresh Products of the ’154 Patent entitles Plaintiff to an injunction permanently enjoining Fresh Products from further infringement of WizKid’s patent rights, pursuant to 35 U.S.C. 283.

58. WizKid has suffered, and continues to suffer, damages from Fresh Products’ infringement of the ’154 Patent, and WizKId is thus entitled to compensation and other monetary relief to the extent allowed by law, including pursuant to 35 U.S.C. §§ 284 and 285.

COUNT TWO
INFRINGEMENT OF THE ’649 PATENT

59. WizKid re-alleges and re-asserts Paragraphs One (1) through Forty-Seven (47) of the instant Complaint as if fully set forth herein.

Fresh Products Ex. 1002
IPR Petition - USP 10,036,154

60. Fresh Products has made, used, sold, offered for sale, and/or imported urinal anti-splash devices, including the infringing Tsunami anti-splash urinal screen, that practices at least claim 1 of the ’649 Patent. Such unlawful conduct continues as of the filing of this Complaint.

61. Specifically, the infringing Tsunami product meets all limitations of at least Claim 1 of the ’649 Patent.

62. As more particularly set forth above, Claim 1 of the ’649 Patent requires a “urinal anti-splash device” comprising “an anti-splash body configured to be mounted vertically on a back wall of a urinal and having a plurality of protrusions that extend from a front surface of the anti-splash body;”

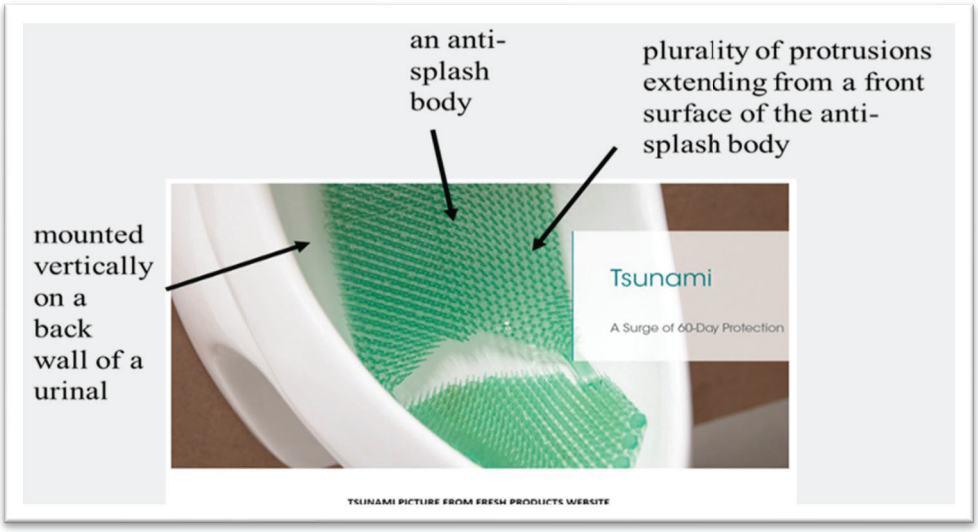

63. Likewise, the infringing Tsunami product contains "a base attached to the anti-splash body at a coupling region formed between the base and the anti-splash body, the base being configured to cover at least a portion of a urinal drain and having a plurality of protrusions extending away from the base on a surface of the base that is contiguous with the front surface of the anti-splash body;" as displayed below:

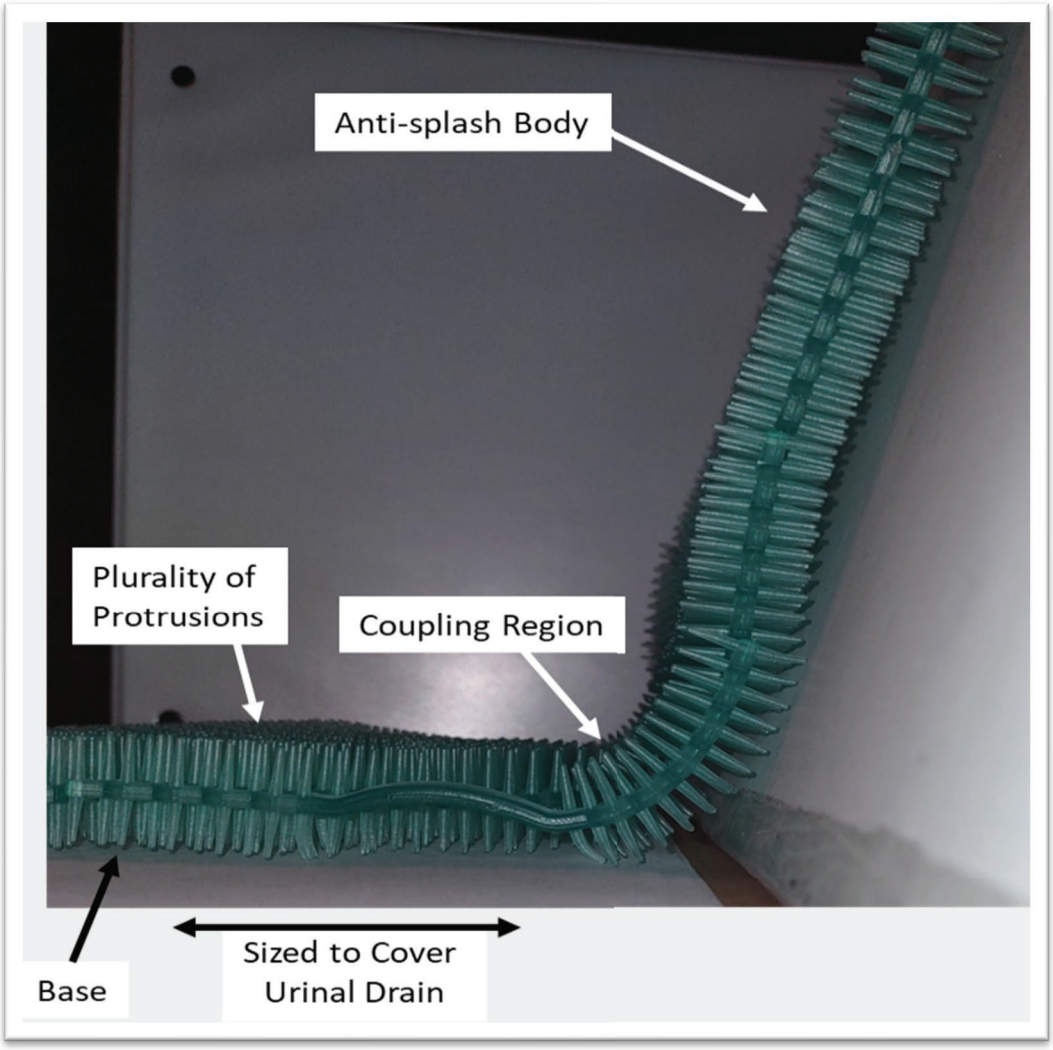

64. As required by the '649 Patent, the infringing Tsunami product also requires that "the coupling region is configured [to] allow the base to move between a first position including the base oriented in a direction parallel to the anti-splash body and a second position including the base oriented in a direction substantially perpendicular from the base."

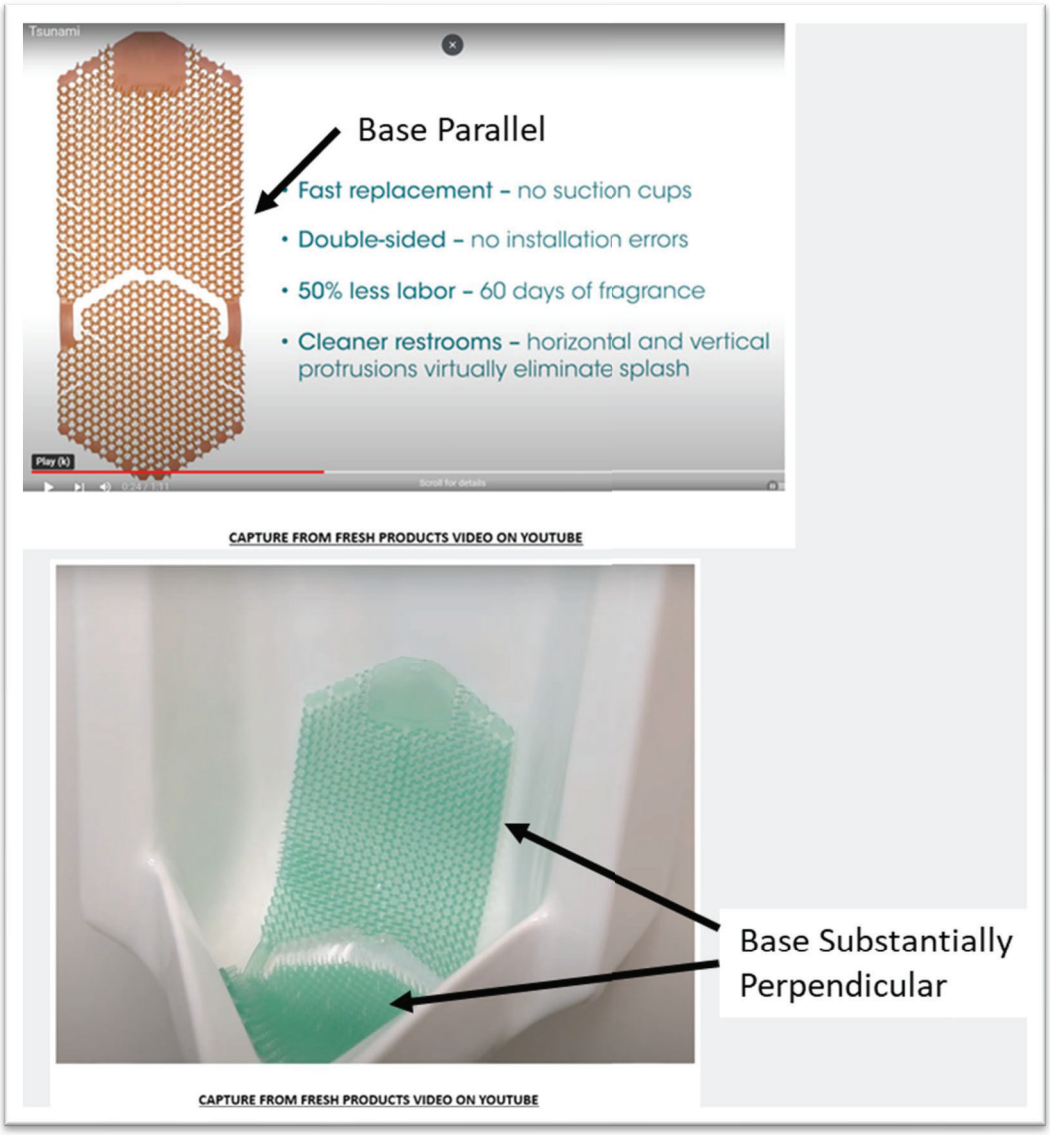

65. By making, using, selling, offering for sale, and/or importing into the United States the infringing Tsunami product, Fresh Products has infringed, and continues to infringe, at least claim 1 of the '649 Patent literally, *and at an absolute minimum*, under the doctrine of equivalents.

66. Fresh Products has knowledge of the '649 Patent at least because it was once WizKid's contract manufacturer of the Splash Hog and enjoyed direct access to the '649 Patent, and also because of WizKid's regular and consistent marking of its own products pursuant to 35 U.S.C. § 287(a). Additionally, WizKid delivered a Cease and Desist demand, accompanied by a

detailed claim chart, on October 26, 2023. Fresh Products responded on November 8, 2023 and January 9, 2024. WizKid subsequently replied on March 6, 2024 and April 23, 2024 with a further breakdown of Fresh Products' deliberate infringement. Despite Fresh Products' knowledge of the '649 Patent and its infringing activities, Fresh Products has infringed, and continues to infringe, at least claim 1 of the '649 Patent by manufacturing, selling, and/or offering for sale Fresh Products' infringing Tsunami product. This intentional infringement without regard for WizKid's patent rights constitutes egregious conduct sufficient to establish willful infringement under 35 U.S.C. § 284.

67. The ongoing and continuous infringement by Fresh Products of the '649 Patent entitles WizKid to an injunction permanently enjoining Fresh Products from further infringement of WizKid's patent rights, pursuant to 35 U.S.C. 283.

68. WizKid has suffered, and continues to suffer, damages from Fresh Products' infringement of the '649 Patent, and WizKid is entitled to compensation and other monetary relief to the extent allowed by law, pursuant to 35 U.S.C. §§ 284 and 285.

PRAYER FOR RELIEF

WHEREFORE, Plaintiff, Sanastar, Inc. d/b/a WizKid Products, respectfully requests this Court to enter judgment in its favor and against Defendant, Fresh Products LLC, on all claims set forth, *supra*, and respectfully requests this Court to:

(a) Enter judgment that Defendant has infringed, and continues to infringe, at least one claim of the '154 Patent in violation of at least one of 35 U.S.C. § 271(a), literally, *and at an absolute minimum*, under the doctrine of equivalents;

(b) Award Plaintiff all available and legally permissible damages and relief sufficient to compensate Plaintiff for Defendant's infringement of the '154 Patent, including to the full

extent permitted by 35 U.S.C. § 284, together with costs, attorneys' fees and interest, in amounts to be determined at and, where appropriate, following trial;

(c) Declare Defendant's infringement of the '154 Patent to be willful and award Plaintiff treble damages and attorneys' fees in accordance with 35 U.S.C. § 284;

(d) Enter judgment that Defendant has infringed, and continues to infringe, at least one claim of the '649 Patent in violation of at least one of 35 U.S.C. § 271(a), literally, *and at an absolute minimum*, under the doctrine of equivalents;

(e) Award Plaintiff all available and legally permissible damages and relief sufficient to compensate Plaintiff for Defendant's infringement of the '649 Patent, including to the full extent permitted by 35 U.S.C. § 284, together with costs, attorneys' fees and interest, in amounts to be determined at and, where appropriate, following trial;

(f) Declare Defendant's infringement of the '649 Patent to be willful and award Plaintiffs treble damages and attorneys' fees in accordance with 35 U.S.C. § 284;

(g) Immediately and permanently enjoin Defendant, under 35 U.S.C. § 283, from making, using, selling, offering for sale, and/or importing into the United States the Tsunami anti-splash device;

(h) Declare this to be an exceptional case under 35 U.S.C. § 285 and award Plaintiff costs, expenses, attorneys' fees, and all other recoverable disbursements in this action; and

(i) Award Plaintiff such other and further relief as may be permitted and is appropriate at law or in equity.

DEMAND FOR JURY TRIAL

Plaintiff, WizKid, hereby demands a trial by jury of all issues so triable as a matter of law pursuant to FED. R. CIV. P. 38(b).

Fresh Products Ex. 1002
IPR Petition - USP 10,036,154

Dated: March 3, 2025

Respectfully submitted,

/s/ *Mark C. Johnson*

RENNER OTTO

Mark C. Johnson (0072625)
mjohnson@rennerotto.com
Sarah L. Boone (0098880)
sboone@rennerotto.com
1621 Euclid Avenue, Floor 19
Cleveland, Ohio 44115
216.621.1113
216.621.6165 (facsimile)

Local Counsel for Plaintiff

THE CONCEPT LAW GROUP, P.A.

Alexander D. Brown, Esq. (*pro hac vice to be filed*)
abrown@conceptlaw.com
Scott D. Smiley, Esq. (*pro hac vice to be filed*)
scott@conceptlaw.com
Zac Davis, Esq. (*pro hac vice to be filed*)
zdavis@conceptlaw.com
6400 North Andrews Avenue, Suite 500
Fort Lauderdale, FL 33309
(t) 754-300-1500
(f) 754-300-1501

Lead Counsel for Plaintiff

Fresh Products Ex. 1002
IPR Petition - USP 10,036,154

Exhibit 1

Wiz Kid - Fresh Buy/Sell Agreement

This Agreement, is made and entered into as of the 10th day of May, 2016 (the "Effective Date"), by and between Sanastar Inc. DBA WizKid, 5079 North Dixie Hwy. #303 Oakland Park, FL 33334 (herein "Wizkid"), and Fresh Products, LLC, 4010 South Ave., Toledo, OH 43615 (herein "Fresh").

Wizkid agrees to purchase from Fresh, and Fresh agrees to manufacture hot stamped, scented urinal screens (herein "Screens") to be sold to Wizkid under the following terms and conditions:

Purpose and Scope

The purpose of this Contract terms is to outline commitments between Fresh Products and WizKid for the development and production of the Splash Hog, a product designed by WizKid. WizKid benefits from the large working knowledge from Fresh products which improves performance of the product, and reduce costs. The product improvements and market knowledge delivered by Fresh increase the value proposition and therefore sales price to using customers. Cost reductions will take 2 forms: 1. Avoided over spends and re-work during design & tool development; 2.The reduction of manufacturing material, as well as, tolling costs for the lifetime of the tool.

1. Consultation Fee

Fresh products will be paid a consultation fee by Wizkid of $25,000. This consultation fee will be paid in royalties of $0.15 per produced Splash Hog. Wizkid will allow audit of all records relevant to the purchase manufacture and sale of the Splash Hog. Once the $25,000 fee is paid, Fresh will no longer collect the $0.15 royalty for product produced by Fresh. This consultation fee may be paid off early in lump sum by Wizkid to end the royalty requirement for Fresh produced items.

1.1 Royalty fees: In the event Wizkid uses another supplier to manufacture/produce the Splash Hog, The $0.15 royalty will still apply even after the $25,000 is paid. (Royalty fees are calculated based upon product purchased by WizKid.)

1.2 Rights and Privileges & Patents. Wiz Kid will be covered by Fresh Patents & agreements for products made by Fresh or when royalty fees are collected.

Product design tool development cost and ownership.

2.1 Fresh will develop and contract the engineering and production of the Splash Hog Mold and Design.

2.2 Design and cost for 4 cavity mold will be $36,000 excluding shipment.

Payment schedule: 1/3 at start of mold engineering/now, 1/3rd upon completion of 1st out samples, and 1/3rd when the mold ships. (1st out approval)

Shipment from Asia: method and Payment will be determined by Wizkid, upon delivery to Fresh.

Wiz Kid - Fresh Buy/Sell Agreement

This Agreement, is made and entered into as of the 10th day of May, 2016 (the "Effective Date"), by and between Sanastar Inc. DBA WizKid, 5079 North Dixie Hwy. #303 Oakland Park, FL 33334 (herein "Wizkid"), and Fresh Products, LLC, 4010 South Ave., Toledo, OH 43615 (herein "Fresh").

Wizkid agrees to purchase from Fresh, and Fresh agrees to manufacture hot stamped, scented urinal screens (herein "Screens") to be sold to Wizkid under the following terms and conditions:

Purpose and Scope

The purpose of this Contract terms is to outline commitments between Fresh Products and WizKid for the development and production of the Splash Hog, a product designed by WizKid. WizKid benefits from the large working knowledge from Fresh products which improves performance of the product, and reduce costs. The product improvements and market knowledge delivered by Fresh increase the value proposition and therefore sales price to using customers. Cost reductions will take 2 forms: 1. Avoided over spends and re-work during design & tool development; 2.The reduction of manufacturing material, as well as, tolling costs for the lifetime of the tool.

1. Consultation Fee

Fresh products will be paid a consultation fee by Wizkid of $25,000. This consultation fee will be paid in royalties of $0.15 per produced Splash Hog. Wizkid will allow audit of all records relevant to the purchase manufacture and sale of the Splash Hog. Once the $25,000 fee is paid, Fresh will no longer collect the $0.15 royalty for product produced by Fresh. This consultation fee may be paid off early in lump sum by Wizkid to end the royalty requirement for Fresh produced items.

1.1 Royalty fees: In the event Wizkid uses another supplier to manufacture/produce the Splash Hog, The $0.15 royalty will still apply even after the $25,000 is paid. (Royalty fees are calculated based upon product purchased by WizKid.)

1.2 Rights and Privileges & Patents. Wiz Kid will be covered by Fresh Patents & agreements for products made by Fresh or when royalty fees are collected.

Product design tool development cost and ownership.

2.1 Fresh will develop and contract the engineering and production of the Splash Hog Mold and Design.

2.2 Design and cost for 4 cavity mold will be $36,000 excluding shipment.

Payment schedule: 1/3 at start of mold engineering/now, 1/3rd upon completion of 1st out samples, and 1/3rd when the mold ships. (1st out approval)

Shipment from Asia: method and Payment will be determined by Wizkid, upon delivery to Fresh.

Mold is owned by Wizkid and Fresh uses the Wizkid Mold.

Design uniqueness belongs to Wizkid.

The Wizkid Splash Hog Design urinal screen is unique to Wizkid.

Fresh has no plans to develop, market or sell a back of urinal splash screen product. If that changes, after 3 years, Fresh will provide a 180 day written notice to Wizkid of intention to create such a product. Meaning 180 days prior to the sale of any such product. If another customer requests such a product from Fresh, Wizkid will be notified there was an inquiry, and not proceed without written approval from Wizkid. If Wizkid moves the mold to another manufacturer, no notification or approval would be required by Fresh to WizKid.

If at some point before 5-31-19 Fresh does produce a product that extends up the back wall of the urinal it will be priced at a minimum of 10% higher than WizKid.

Wizkid trade names, (private labels), belong to Wizkid. It is the responsibility of Wizkid to check and manage trade names/trademarks. Fresh produces as directed by Wizkid.

3. Minimums, production and shipment times

Minimum order quantity for production of the urinal screens is 3816 units per fragrance, with hot stamp adjustments available in batches of at least 480 Pieces.

Production of screens will be completed for shipment within 4 weeks of order receipt once mold has arrived in Toledo, and been verified by the molder.

Quality: Fresh will produce the Splash Hog to the following specification:

Total weight 150 grams. (To be verified by final mold first cut samples)

Fragrance loading estimated at 30 grams. (To be verified by final mold first out samples) Goal is 60 days of fragrance release performance.

4 Pricing:

$1.96 per Splash Hog

1 per pack, 6 screens per box, 36 per master case.

Includes 2 suction cups. In packs of 12 per box (Sample of Fresh's current suction cup provided for approval)

Pricing excludes thermal chromatic dye. Cost of adding thermal chromatic properties will be added following the testing of samples from various suppliers.

This price is inclusive of 1 hot stamp design. Additional hot stamp designs would incur a $65 art and plate charge.

Pricing will not increase for 12 months from delivery of first production case.

Pricing reviewed annually on anniversary of first production shipment, for following 12 month period.

Anticipated annual price increase will not exceed 5%, and references The PPI. (Producer Pricing Index)

In the event that raw material costs escalate 10% or more, 5% cost increase would need to be exceeded.

FRESH PRODUCTS, LLC

By: _____
Name: Patrick C. Marcanio

SANASTAR, INC.

By: _____
Name: Jeff Crevier

Exhibit 2

WizKid PRODUCTS

MASTER CONTRACT MANUFACTURING SERVICES AGREEMENT

THIS MASTER CONTRACT MANUFACTURING SERVICES AGREEMENT made this 1 day of Dec., 2018, (the "Effective Date") by and between ***Sanastar, Inc.***, a Florida corporation doing business as ***WizKid Products***, having its principal office at 5079 North Dixie Highway, Suite #303, Oakland Park, Florida 33334 (hereinafter "Wizkid") and ***Fresh Products LLC***, an Ohio limited liability company, having its principal offices at 4010 South Avenue, Toledo, Ohio 43615 (hereinafter "Fresh" or "Manufacturer")("Wizkid" and "Fresh" collectively are sometimes hereinafter referred to as "parties").

RECITALS

WHEREAS, Wizkid Products is engaged in the production, sale and distribution of innovative janitorial products, including WizKid antimicrobial restroom mats and The Splash Hog urinal screen;

WHEREAS, Fresh is an innovative odor control and air freshening manufacturer with production facilities located in Toledo, Ohio;

WHEREAS, the parties previously entered into a certain agreement dated May 16, 2016, for the development and production of WizKid's Splash Hog product (the "Wiz Kid-Fresh Buy/Sell Agreement"), pursuant to which Fresh manufactured hot stamped, scented urinal screens on behalf of WizKid;

WHEREAS, the parties desire to enter into this Master Contract Manufacturing Services Agreement (hereinafter known as "Agreement") in order to both: i) nullify the existing agreement between the parties ("WizKid-Fresh Buy/Sell Agreement dated May 16, 2016"); and ii) provide new terms and conditions for the Agreement between the parties;

WHEREAS, WizKid wishes to contract with Manufacturer for the production of urinal screens and related products (the "Products") and Fresh wishes to manufacture Products for WizKid subject to this Agreement.

NOW, THEREFORE, in consideration of the mutual covenants set forth herein and for other good and valuable consideration, it is agreed as follows:

AGREEMENT

1. Term. The Term of this Agreement will commence as of the Effective Date and will continue herein under the terms of this Article. Subject to the provisions of this Article, provided that no event of default (as defined below) has occurred and is continuing the Agreement shall continue until either party gives Notice of Termination as defined below. WizKid and Fresh shall have the right to terminate this Agreement with or without cause by providing the other party with ninety (90) days written notice.

The following constitutes an event of default under this Agreement and either party may immediately terminate this Agreement if said default is not timely cured: (a) If WizKid fails to pay any funds owing to Manufacturer pursuant to this Agreement within ninety (90) days of when due and does not cure such failure by providing payment within ten (10) days of being notified by Manufacturer; or (b) If either party fails to materially perform or observe any material term, condition, agreement or covenant in this Agreement, and such default is not remedied within thirty (30) days after written notice thereof from the non-defaulting party, unless such default is curable but is not capable of being cured through the defaulting party's diligent and continuous effort within such thirty (30) day period, and such party immediately commences to cure such default, and thereafter applies its diligent and continuous best efforts to cure such default, and does in fact cure such default within sixty (60) days of the initial notice of default.

2. Manufacture of Products and Pricing. During the Term of this Agreement, Manufacturer shall manufacture and supply the Products to WizKid, such products as the parties may agree to from-time-to-time. The parties acknowledge that this Agreement shall provide the general terms and conditions agreed to by the parties, and that specific terms and conditions regarding specifications, pricing and other product specific terms shall be set forth in a Statement of Work (SOW) attached (one per product line) to this Agreement.

Upon request by WizKid, Manufacturer will provide samples, at no cost to WizKid, to confirm that a production error has been remedied, that a specific manufacturing request has been performed accurately or when a new product is being produced. Said samples must be approved by WizKid before Manufacturer continues with production. No Products shall be manufactured hereunder except on WizKid's prior written directions. Products manufactured pursuant to this Agreement shall only be manufactured and/or sold for the account of WizKid and may not be offered for sale, sold, transferred, distributed, shipped or disposed of in any way or to any person or entity without the prior written instruction, direction and authorization of WizKid. Manufacturer shall not subcontract for the manufacture of Products without WizKid's prior written consent. Any violation of this provision is a material breach of this Agreement.

3. **Orders**. WizKid will submit orders for Products to Manufacturer by submitting a purchase order ("Order"). The terms of any such Order are governed by the terms and conditions of this Agreement as it may be amended from time to time (the "Terms"). With respect to any Order, the parties shall only be bound by this Agreement and the applicable issued Order. All orders between the parties must be submitted on the requisite Order form attached hereto as Exhibit B and sent to Manufacturer by email or P.O. Revision. No other form of order request is acceptable or binding unless otherwise agreed to in writing by the parties. Each Order hereunder shall be deemed separate and severable and not part of one or more installment contracts. In the event that an Order contains terms and conditions that are deemed at variance with this Agreement, the latter shall govern.

4. **Delivery**. Manufacturer shall ensure that each Order received from WizKid is timely filled and that the Products are delivered within the agreed upon delivery schedule. Manufacturer shall ensure that all Products delivered to WizKid are invoiced and packaged in accordance with the applicable Order and all applicable U.S. and local laws. Manufacturer shall bear the risk of loss of, or damage to the Products until actual receipt, inspection and acceptance by WizKid or subpurchaser (party intended to receive the shipment of products) designated in said Order.

5. **Quality Control**. Manufacturer shall ensure that the Products meet or exceed all of WizKid's specifications and standards. To the extent applicable, Manufacturer shall also ensure that the Products meet or exceed all government requirements (including but not limited to rules, regulations and standards issued pursuant to the Consumer Product Safety Act, California Safe Drinking and Toxic Enforcement Act, any other applicable federal or state law, or by the U. S. Federal Trade Commission, Environmental Protection Agency, Consumer Product Safety Commission, and any other federal or state agency). WizKid will provide any necessary labeling requirements. All of the aforementioned is subject to WizKid's prior review and approval as to quality. Without limiting the foregoing, the Products shall be of high quality as to workmanship, fit, design and materials used therein. Manufacturer shall submit pre-production samples to WizKid for its review and approval. Manufacturer will ensure that the Products are at least equal in quality, workmanship, appearance, fit, design and material to the pre-production samples approved by WizKid. WizKid's payment for, retention, use or acceptance of the Products shall not be deemed a waiver of WizKid's rights to inspect the Products at any reasonable time or place and in any reasonable manner, nor shall such payment for, retention use or acceptance of the Products by WizKid be deemed a waiver of any breach of any representation or warranty.

Manufacturer warrants to WizKid that (the "Product Warranty"): for the period provided by applicable law the Products will: (a) conform, in all material respects, to the specifications, standards, drawings, samples, descriptions, quality requirements, performance requirements, statements of work, and fit, form and function requirements furnished, specified or approved by WizKid for the Product; (b) conform with WizKid's quality standards; (c) be merchantable (as such term is defined in the UCC) and free from defects, latent or otherwise, in design, materials, and workmanship; (d) not infringe upon, violate or misappropriate the Intellectual Property Rights of any Person; (e) be fit

and sufficient for the particular purpose intended by WizKid and its customers, of which the Manufacturer is aware (and Manufacturer acknowledges that it knows of WizKid's intended use of the Products and that such Products have been selected, designed, manufactured or assembled by Manufacturer based upon WizKid's stated use and will be fit and sufficient for the particular purposes intended by WizKid); and (d) comply with all applicable Laws.

The Product Warranty (a) is in addition to all other warranties, express, implied, statutory and common law, (b) extends to the Products' future performance, (c) survives Manufacturer's delivery of the Products, WizKid's receipt, inspection, acceptance, use of the Products and payment for the Products, and the termination or expiration of this Agreement, (d) inures to the benefit of WizKid and its successors and assigns and (e) may not be limited or disclaimed by Manufacturer. WizKid's approval of Manufacturer's designs, materials, processes, drawings, specifications or similar requirements will not be construed to relieve Manufacturer of any warranties. Manufacturer shall transfer and assign to WizKid all of its rights (but not any obligations) under all warranties from equipment or material manufacturers or suppliers, permitted subcontractors or other third parties. Any applicable statute of limitations on WizKid's claims for breach of warranty will commence no earlier than the date on which WizKid discovers the breach.

6. Labor Standards. Manufacturer shall ensure that (i) it does not employ child labor or workers younger than permitted in the country of manufacture, (ii) it does not utilize forced, convict, prison or indentured labor, (iii) all laws in the country of manufacture relating to working conditions, hours and wages are observed; and (iv) it does not engage in any labor practice that violates the laws of the country of manufacture.

7. Inspection and Acceptance. Products purchased are subject to WizKid's inspection and approval at destination. If WizKid determines any of the Products to be non-conforming, defective or otherwise not in compliance with this Agreement due to an error in production or shipping by Manufacturer:

(a) Products will be returned at Fresh's risk, and all handling and transportation expenses, both ways, will be assumed by Fresh.

(b) Fresh shall have twenty (20) days upon receipt of written rejection to replace the Products with conforming Products;

(c) Once Products have been rejected by WizKid and returned for replacement, it will be essential that Fresh receive new shipping instructions from WizKid before making the replacement;

(d) In the event Manufacturer cannot provide conforming Product(s) within twenty (20) days following rejection, Manufacturer is in default of this Agreement and WizKid may terminate the agreement immediately without further notice or any requirement to provide Manufacturer more time to cure pursuant to any other section of this Agreement.

Fresh Products Ex. 1002
IPR Petition - USP 10,036,154

Notwithstanding any other provisions of this Agreement, WizKid has the right to inspect the Products prior to payment and acceptance.

8. Ownership and Bailment of Tooling, Dies, Equipment. Manufacturer acknowledges that WizKid may from time-to-time place certain equipment, tools, dies, materials (collectively "WizKid Equipment") at Manufacturer's Facility for purposes of its performance under this Agreement, hereto, thereby creating a legal bailment. WizKid will bear the cost of transportation, packing, transportation insurance arising in connection with the delivery of the WizKid Equipment under the Agreement.

Manufacturer acknowledges and agrees that WizKid has sole ownership of the WizKid Equipment. Manufacturer acknowledges and agrees that it shall use the WizKid Equipment **solely and exclusively** in the manufacturing of the Product for WizKid. Manufacturer shall keep records from the date of acceptance of the WizKid Equipment including its use, maintenance, repair and/or replacement, and other items as may be requested by WizKid from time to time. WizKid has the right to inspect the WizKid Equipment at any time.

Manufacturer will maintain the WizKid Equipment in a reasonable and prudent manner, including periodic calibration in conformance with applicable standards. Manufacturer must notify WizKid immediately if any piece is damaged or otherwise in need of alteration or repair. Manufacturer shall use vendors directed by WizKid, the cost of which shall be separately borne by WizKid. Manufacturer will be responsible for all damage or destruction of equipment while in Manufacturer's possession resulting from disaster, Act of God or Manufacturer's employees, owners, independent contractors or consultants' neglect or negligence.

9. Confidentiality. Each Party recognizes that the proprietary information relating to the other Party or any of its affiliates, which each Party may learn, is the valuable property of the other Party. Each Party acknowledges the need to preserve the confidentiality and secrecy of such information as well as all information regarding the terms and provisions of this Agreement. This information includes but is not limited to the existence of this Agreement, the designs, drawings, material and manufacturing specifications, intellectual capital, trade secrets, patents, as well as financial, business, marketing and product development information (collectively "Confidential Information"). Thus, during and after the Term, neither Party nor its respective officers, directors, employees, agents and representatives will use or disclose any Confidential Information except as necessary for the operation of the business of the Agreement or pursuant to Court Order, or as otherwise required by law or by prior written consent of the Parties. The Parties shall take all reasonable steps necessary to ensure that any permitted use of the Confidential Information preserves such confidentiality and secrecy. The obligations set forth in this Article 9 shall survive the termination of this Agreement.

10. COMPLIANCE WITH LAWS AND REGULATIONS

10.1 **General compliance with laws**. Both parties will comply with applicable laws and regulations, including but not limited to all applicable federal, state and local laws, orders, rules and regulations, and all applicable jurisdictions' rules and regulation concerning freedom of association, wages and working hours, safety and health, anti-discrimination and humane treatment of workers.

10.2 **Specific Compliance by Manufacturer**. Manufacturer specifically acknowledges and warrants that it will comply with all import and customs laws, regulations and administrative determinations of the importing country. Manufacturer must comply with the security criteria of any supply chain security government program of the importing country. If Manufacturer is the exporter of record, Manufacturer must obtain all export authorizations from the governments that may be required to lawfully make such shipments. Manufacturer agrees that it and each subcontractor shall to the extent applicable by law comply with all applicable executive orders, laws and regulations relating to any of the above.

11. Non-Competition.

11.1 That, for the period of this Agreement and for one (1) years thereafter, the Manufacturer will not engage in or in any way, directly or indirectly, own, manage, operate, control or otherwise advise or assist or be actively connected with, directly or indirectly, any enterprise that engages in, or otherwise carries on, the sale of urinal screens that extend up the back wall of the urinal.

11.2 Because the breach or anticipated breach of the restrictive covenant provided for in this Section will result in immediate and irreparable harm and injury to WizKid, for which it will not have an adequate remedy at law, Manufacturer agrees that WizKid shall be entitled to relief in equity to either or both temporarily and permanently enjoin such breach or anticipated breach and to seek any and all other legal and equitable remedies to which WizKid may be entitled.

11.3 It is acknowledged and agreed that, although the parties hereto agree the restrictions contained in this Section are reasonable in the context in which made, if a final judicial determination is made that the time, territory, scope or any other restriction contained in this Section is unreasonable or otherwise unenforceable, neither this Agreement nor the provisions of this Section shall be rendered void, but shall be deemed amended to apply as to such maximum scope, time and territory and to such other extent as such Governing Authority may judicially determine or indicate to be reasonable, or, if such Governing Authority does not so determine or indicate, to the maximum extent that any pertinent statute or judicial decision may indicate to be a reasonable restriction under the circumstances involved, and, as so modified, the restrictions contained in this Section shall be binding and enforceable.

Fresh Products Ex. 1002
IPR Petition - USP 10,036,154

12. Indemnity. Manufacturer shall defend, indemnify and hold harmless WizKid from any and all claims, liability, loss, damage, reasonable attorney's fees or expenses arising by reason of (i) the breach of any of the terms in this Agreement; (ii) the negligent or intentional acts or omissions of Manufacturer or any Associated Person or (iii) infringement by Manufacturer or any Associated Person of third party intellectual property rights unless such claims, liability, loss, damage, reasonable attorney's fees or expenses arise from the gross negligence or willful misconduct of WizKid, its officers, employees, agents or sub-contractors. Manufacturer shall: (i) promptly notify WizKid of any claim for which indemnification may be sought; (ii) cooperate fully in the defense of such claim; and (iii) permit WizKid to settle or compromise such claim on terms and conditions which, in good faith it determines to be appropriate.

13. NO LIABILITY FOR CONSEQUENTIAL OR INDIRECT DAMAGES. EXCEPT FOR LIABILITY FOR INDEMNIFICATION, LIABILITY FOR BREACH OF CONFIDENTIALITY, OR LIABILITY FOR INFRINGEMENT OR MISAPPROPRIATION OF INTELLECTUAL PROPERTY RIGHTS, IN NO EVENT SHALL WIZKID OR ITS REPRESENTATIVES BE LIABLE FOR CONSEQUENTIAL, INDIRECT, INCIDENTAL, SPECIAL, EXEMPLARY, PUNITIVE OR ENHANCED DAMAGES, ARISING OUT OF OR RELATING TO ANY BREACH OF THIS AGREEMENT, REGARDLESS OF (A) WHETHER SUCH DAMAGES WERE FORESEEABLE, (B) WHETHER OR NOT IT WAS ADVISED OF THE POSSIBILITY OF SUCH DAMAGES AND (C) THE LEGAL OR EQUITABLE THEORY (CONTRACT, TORT OR OTHERWISE) UPON WHICH THE CLAIM IS BASED, AND NOTWITHSTANDING THE FAILURE OF ANY AGREED OR OTHER REMEDY OF ITS ESSENTIAL PURPOSE.

14. Intellectual Property:

14.1 Ownership. Each of the Parties acknowledges and agrees that:

(a) each Party retains exclusive ownership of its Background Intellectual Property Rights (Intellectual Property, as applicable, except for any Foreground Intellectual Property Rights);

(b) WizKid does not transfer to Manufacturer any of its Background Intellectual Property Rights, and Manufacturer may not use any of WizKid's Background Intellectual Property Rights other than to produce and supply Products to WizKid hereunder;

(c) Manufacturer does not transfer to WizKid any of Manufacturer's Background Intellectual Property Rights, except that Manufacturer grants to WizKid and its customers the right to resell Products or incorporate Products purchased from Manufacturer into finished Products and to sell such finished Products to its customers;

(d) all Foreground Intellectual Property Rights (any and all of the Intellectual Property Rights developed with respect to, or for incorporation into, the Products, that are either developed by WizKid alone, by WizKid and Manufacturer jointly or by Manufacturer alone as requested by WizKid in connection with this Agreement) will be owned by WizKid;

(e) Manufacturer assigns to WizKid all of Manufacturer's right, title and interest in and to all Foreground Intellectual Property Rights, and, to the extent that any Foreground Intellectual Property Rights are copyrightable works or works of authorship (including computer programs, technical specifications, documentation, and manuals), the Parties agree that such works are "works made for hire" for WizKid under the US Copyright Act;

(f) Manufacturer shall only use the Foreground Intellectual Property Rights to produce and supply Products to WizKid; and

(g) Manufacturer waives any claim against WizKid, including any hold-harmless or similar claim, whether known or unknown, contingent or latent, in any way related to a claim asserted against Manufacturer or WizKid for infringement of any Intellectual Property Rights.

14.2 Prohibited Acts. Each of the Parties shall not:

(a) take any action that may interfere with the other Party's Intellectual Property Rights, including such other Party's ownership or exercise thereof;

(b) challenge any right, title or interest of the other Party in such other Party's Intellectual Property Rights;

(c) make any claim or take any action adverse to such other Party's ownership of its Intellectual Property Rights;

(d) register or apply for registrations, anywhere in the world, the other Party's Trademarks or any other Trademark that is similar to such other Party's Trademark[s] or that incorporates such Trademarks in whole or in confusingly similar part;

(e) use any mark, anywhere, that is confusingly similar to the other Party's Trademarks;

(f) misappropriate any of the other Party's Trademarks for use as a domain name without such other Party's prior written consent; or

Fresh Products Ex. 1002
IPR Petition - USP 10,036,154

(g) alter, obscure or remove any of the other Party's Trademarks or trademark or copyright notices or any other proprietary rights notices placed on the products purchased under this Agreement (including Products), marketing materials or other materials.

15. Reseller Purchasers. WizKid may sell the Products to purchasers for resale and WizKid's rights under this Agreement shall also benefit such reseller purchasers, their successors and assigns. All warranties of Manufacturer, whether express or implied, shall survive testing, inspection, or acceptance and payment by WizKid or such reseller purchaser.

16. Relationship. Fresh is an independent contractor, not an agent, licensee, distributor, joint venturer, partner or employee of WizKid, and is not authorized to assume or create any obligation on behalf or in the name of WizKid. Fresh shall be solely responsible for all of its own expenses, and for the conduct of its own employees, in connection with the performance of Fresh's responsibilities under this Agreement

17. Governing Law; Jurisdiction. This Agreement has been entered into in the State of **Florida** and will be construed by and interpreted in accordance with the laws of that State without regard to principles of conflict of laws. WizKid and Manufacturer hereby agree that the State and Federal courts sitting in the State of **Florida** have exclusive jurisdiction in any action arising out of or connected in any way with this Agreement; and (ii) each consent to personal jurisdiction of and venue in such courts in any such matter. The United Nations Convention for the International Sale of Products shall not be applicable to this Agreement.

18. Severability. In the event that any one or more provisions of this Agreement is held invalid, illegal or unenforceable in any respect, the validity, legality or enforceability of the remaining provisions contained herein will not in any way be affected or impaired thereby.

19. Waiver. No failure or delay on the part of either party in exercising any power or right under this Agreement will operate as a waiver thereof, nor will any single or partial exercise of any such power or right preclude any other or further exercise thereof or the exercise of any other power or right. No waiver by either party of any provision of this Agreement, or of any breach or default, will be effective unless in writing and signed by the party against whom such waiver is to be enforced. All rights and remedies provided for herein will be cumulative and in addition to any other rights or remedies such parties may have at law or in equity.

20. Non-Exclusivity/Exclusivity. Subject to the terms hereof, Fresh is not prohibited from engaging with other parties in similar kind of services as will be conducted for WizKid, however, Fresh is prohibited from producing or manufacturing a product that is the same or similar to the Splash Hog (patent no. 10,036,154), which extends up the back wall of the urinal, for itself or any other company to sell. The aforementioned prohibition survives the termination of this Agreement and extends for two years thereafter. WizKid is not restricted from procuring similar or the same

kind of services as the ones conducted herein from other manufacturers other than Fresh pursuant to any separate agreement.

21. Authorized Signatories. It is agreed and warranted by the Parties that the individuals signing this Agreement on behalf of the respective Parties are authorized to execute such an agreement. No further proof of authorization shall be required.

22. Counterparts. This Agreement may be executed in one or more counterparts, each of which will be deemed to be an original, but all of which together will constitute one and the same instrument, without necessity of production of the others.

23. Entire Agreement; Modification; Waiver. This Agreement is the entire agreement between the Parties with respect to the subject matter and supersedes any prior agreement or communications between the Parties relative thereto, whether written or oral. No waiver of any Agreement right shall be effective unless in writing, signed by an authorized representative of the waiving party. No waiver of a right arising from any breach or failure to perform shall be deemed a waiver of any future right.

24. Notices. Unless otherwise agreed to by the Parties, all notices shall be deemed effective when received and made in writing by either (i) e-mail, (ii) registered mail, (iii) certified mail, return receipt requested, (iv) overnight mail, or (v) fax with confirmation, addressed to the party to be notified at the following address or to such other address as such party shall specify by like notice hereunder:

WizKid:
Sanastar Inc. DBA WizKid Products
5079 N Dixie Hwy #303
Oakland Park, FL. 33334
Jeff.crevier@wizkidproducts.com
Attention: Jeff Crevier

Fresh:
Fresh Products LLC
4010 South Avenue
Toledo, OH 43615
cadams@mailfresh.us
Attention: Chris Adams

25. Attorney's Fees. If either party incurs any legal fees associated with the enforcement of this Agreement or any rights under this Agreement, the prevailing party shall be entitled to recover its reasonable attorney's fees and any court, arbitration, mediation, or other litigation expenses from the other party.

26. Waiver of Jury Trial. Each Party acknowledges and agrees that any controversy that may arise under this Agreement, including exhibits and other attachments to this Agreement, is likely to involve complicated and difficult issues and, therefore, each such Party irrevocably and unconditionally waives any right it may have to a trial by jury in respect of any legal action arising out of or relating to this Agreement, including any exhibits and other attachments to this Agreement, and the transactions contemplated hereby.

27. Specific Performance. Brand logos and other trademark requirements will be supplied to Fresh by WizKid. These logos and or trademarks must displayed on all products, labels and documentation associated with our products.

IN WITNESS WHEREOF, the parties hereto have duly executed this Agreement on the date set forth above and have the requisite authority to enter this Agreement on behalf of their company, therefore obligating WizKid and Fresh to the terms of this Agreement.

Sanastar Inc. DBA WizKid Products
5079 N Dixie Hwy #303
Oakland Park, FL 33334

Jeffrey S. Crevier, President

Fresh Products LLC
4010 South Avenue
Toledo, Ohio 43615

12.1.18

Chris Adams, Global EVP

Exhibit 3

US010036154B2

(12) **United States Patent**
Crevier

(10) **Patent No.: US 10,036,154 B2**
(45) **Date of Patent: Jul. 31, 2018**

(54) **URINAL ANTI-SPLASH DEVICE**

(71) Applicant: **Jeffrey Scott Crevier**, Fort Lauderdale, FL (US)

(72) Inventor: **Jeffrey Scott Crevier**, Fort Lauderdale, FL (US)

(*) Notice: Subject to any disclaimer, the term of this patent is extended or adjusted under 35 U.S.C. 154(b) by 0 days.

(21) Appl. No.: **15/342,543**

(22) Filed: **Nov. 3, 2016**

(65) **Prior Publication Data**

US 2018/0119403 A1 May 3, 2018

(51) **Int. Cl.**
E03D 9/00 (2006.01)
E03D 13/00 (2006.01)

(52) **U.S. Cl.**
CPC ***E03D 13/005*** (2013.01)

(58) **Field of Classification Search**
CPC E03D 9/00
USPC 4/300.3
See application file for complete search history.

(56) **References Cited**

U.S. PATENT DOCUMENTS

4,671,976	A *	6/1987	Vidal	A47K 1/14 4/286
4,866,793	A *	9/1989	Luedtke	E03D 9/00 4/300.3
D329,893	S *	9/1992	Luedtke	E03D 9/00 D23/310
5,313,672	A *	5/1994	Luedtke	E03D 9/00 4/144.1
5,398,347	A *	3/1995	Luedtke	E03D 9/00 4/300.3
D393,896	S *	4/1998	Wagner	E03D 9/00 D23/261
5,774,905	A *	7/1998	Wager	E03D 13/00 4/222.1
5,809,590	A *	9/1998	Williams	A47K 11/12 4/300.3
D427,295	S *	6/2000	Wagner	A47K 11/12 D23/307
6,550,075	B1 *	4/2003	Brannon	A47K 13/24 4/300.3
D639,410	S *	6/2011	Ramirez	A47K 17/00 D23/310
8,043,498	B2 *	10/2011	Rueda	E03F 1/00 210/164
8,056,153	B2 *	11/2011	Ruedas	E03D 13/00 4/222

(Continued)

Primary Examiner — Lori Baker
(74) *Attorney, Agent, or Firm* — The Concept Law Group; Scott D. Smiley; Scott M. Garrett

(57) **ABSTRACT**

A urinal anti-splash device including an anti-splash body sized and shaped to couple to at least a portion of a urinal. The anti-splash body may include a first portion, a second portion opposite the first portion, a longitudinal length extending from the first portion to the second portion, and an upper surface extending the longitudinal length. The urinal anti-splash device also includes a base coupled to the first portion and configured to extend in a direction substantially perpendicular from the first portion. The urinal anti-splash device further includes a first plurality of protrusions extending outwardly from the upper surface of the anti-splash body and a second plurality of protrusions extending outwardly from the base, the second plurality of protrusions configured to extend in the direction substantially perpendicular from the first portion of the anti-splash body.

20 Claims, 8 Drawing Sheets

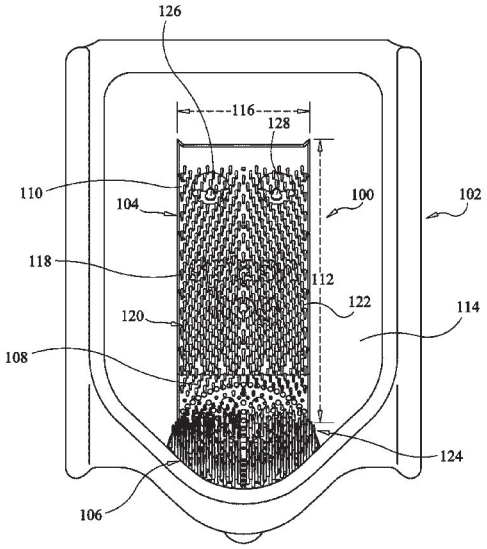

(56) **References Cited**

U.S. PATENT DOCUMENTS

D678,482	S *	3/2013	Williams	E03D 9/00 D23/261
8,856,976	B1 *	10/2014	Niedzielski	E03D 9/00 4/300.3
8,856,977	B2 *	10/2014	Ramirez	E03D 13/00 4/309
D787,031	S *	5/2017	Morgan-Williams	D23/307
2004/0093662	A1 *	5/2004	Zhu	A47K 17/00 4/300.3
2013/0000027	A1 *	1/2013	San Luis	E03D 9/00 4/300.3
2015/0047114	A1 *	2/2015	Ramirez	E03D 13/00 4/300.3
2015/0143624	A1 *	5/2015	Irving	E03D 9/00 4/300.3

* cited by examiner

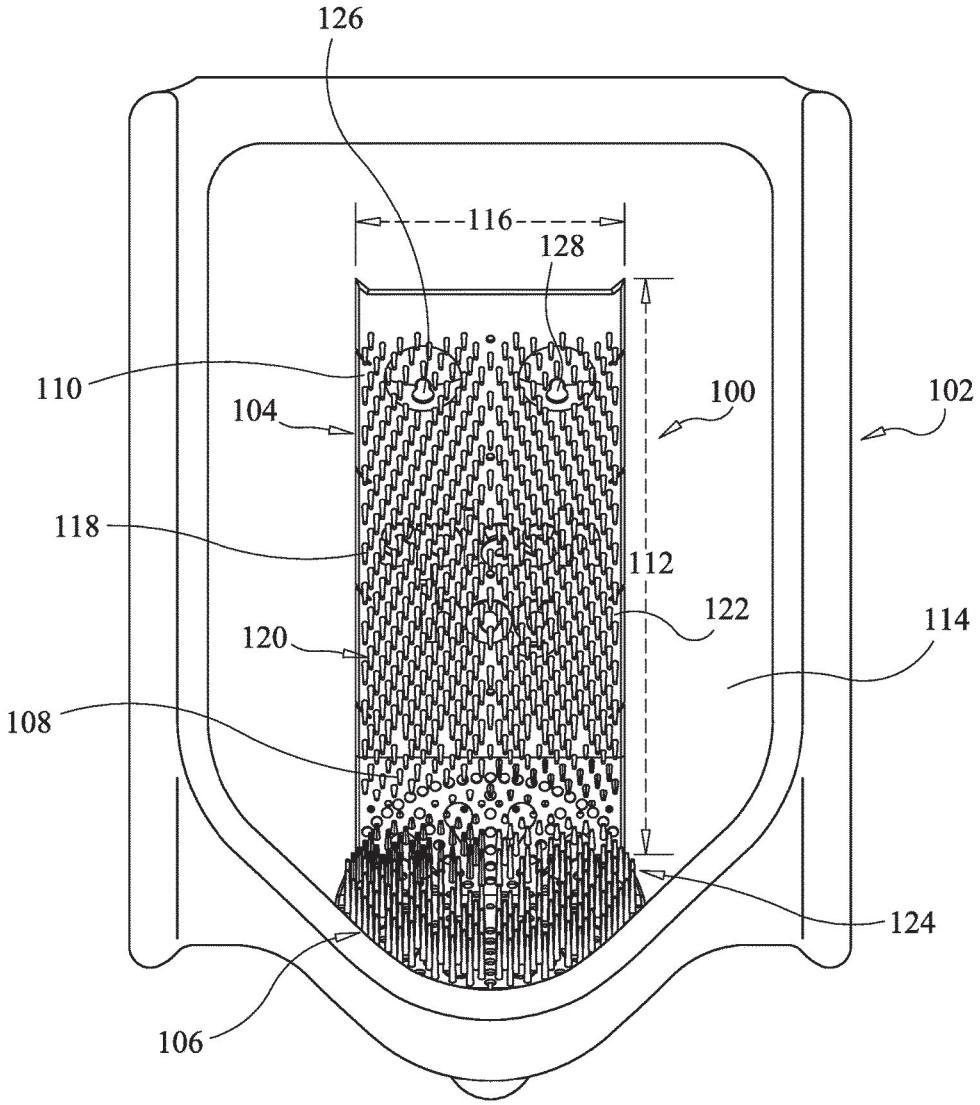

FIG. 1

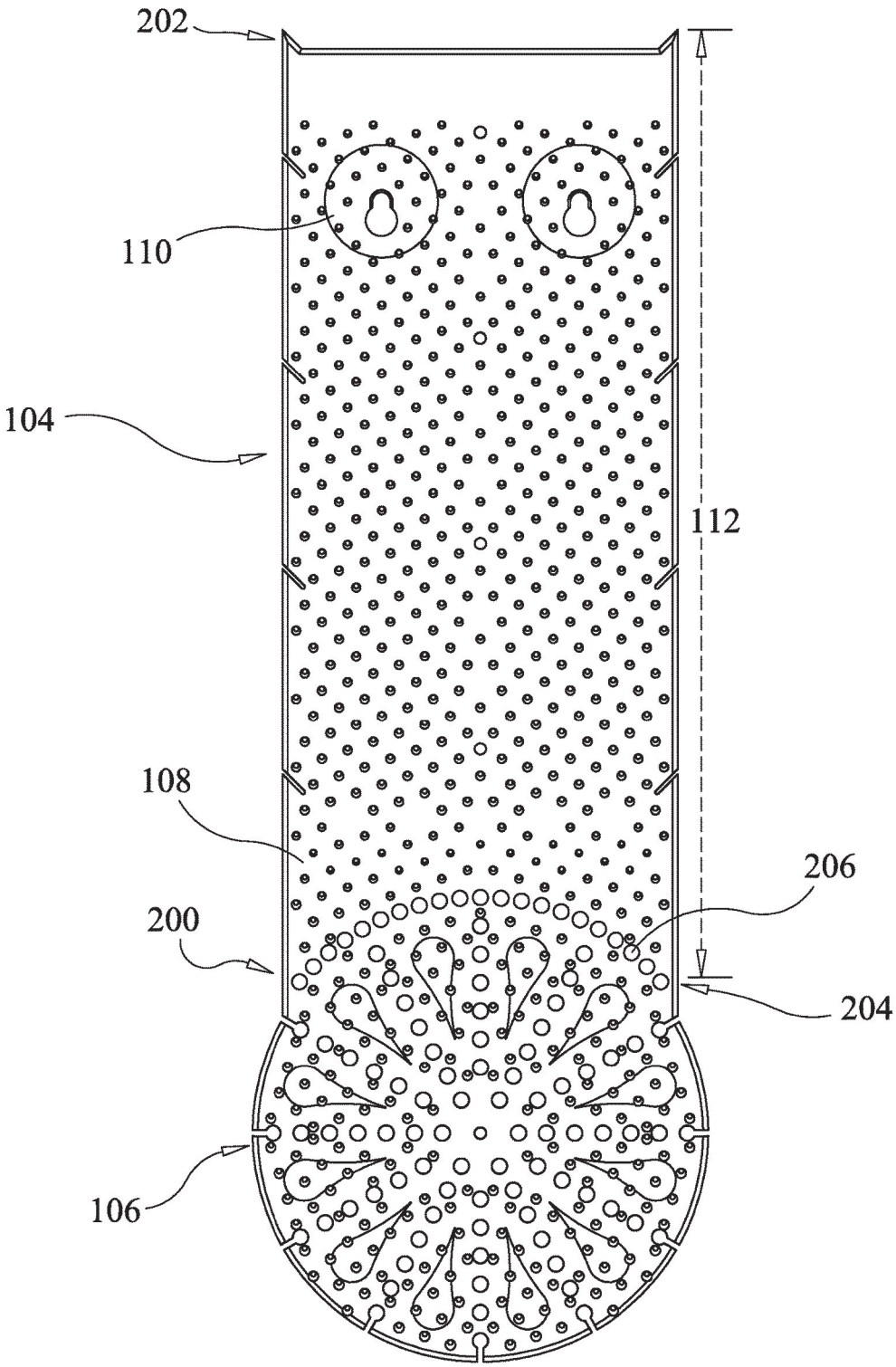

FIG. 2

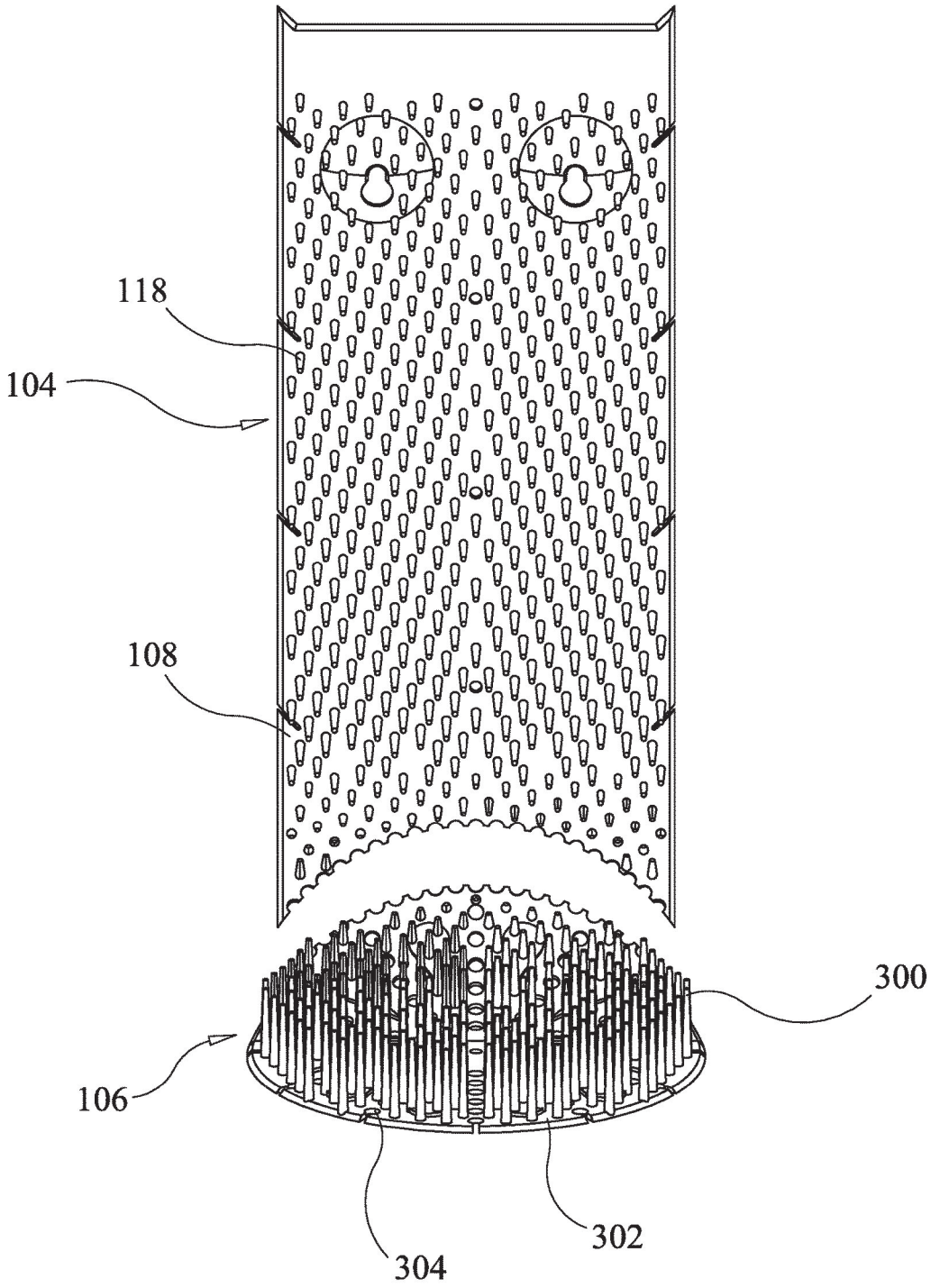

FIG. 3

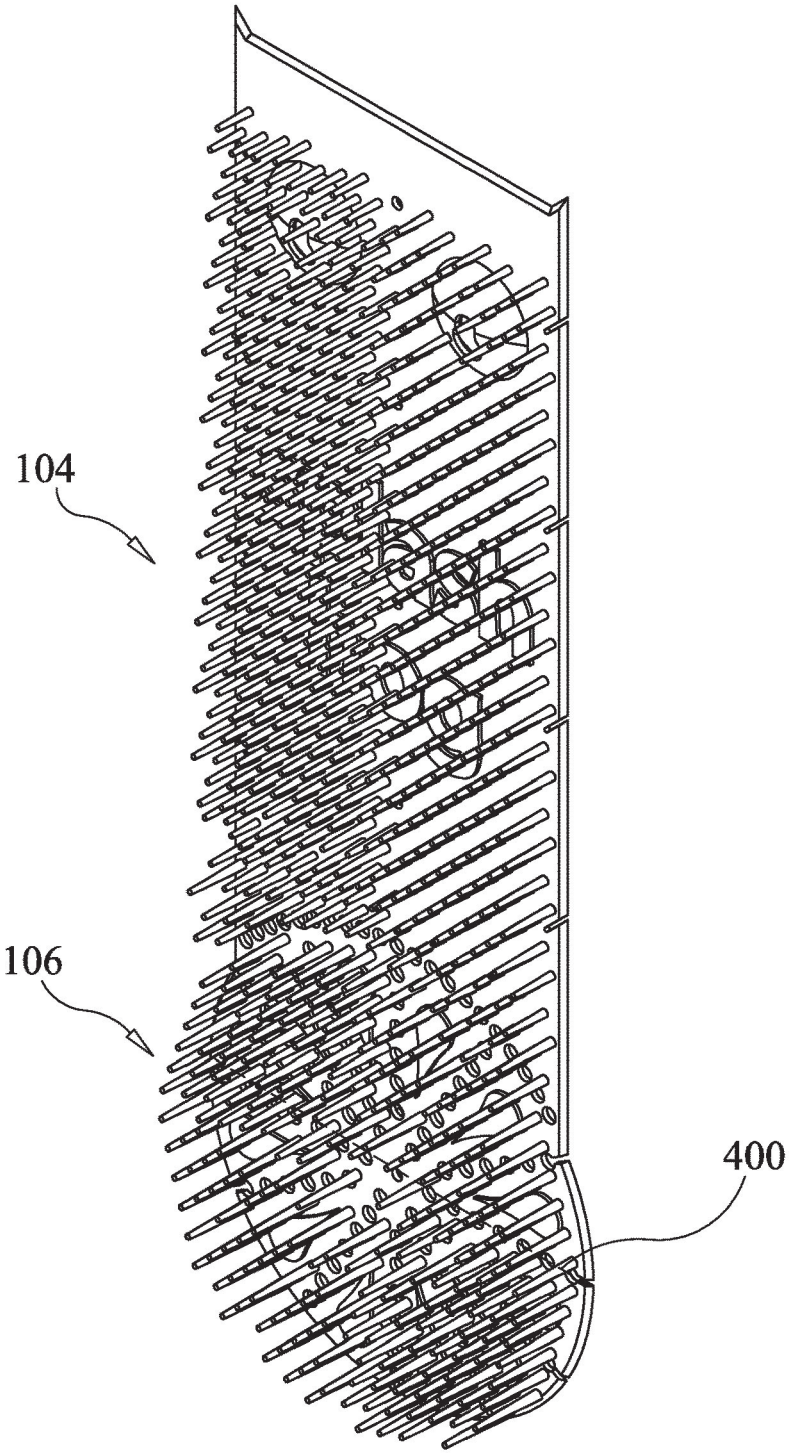

FIG. 4

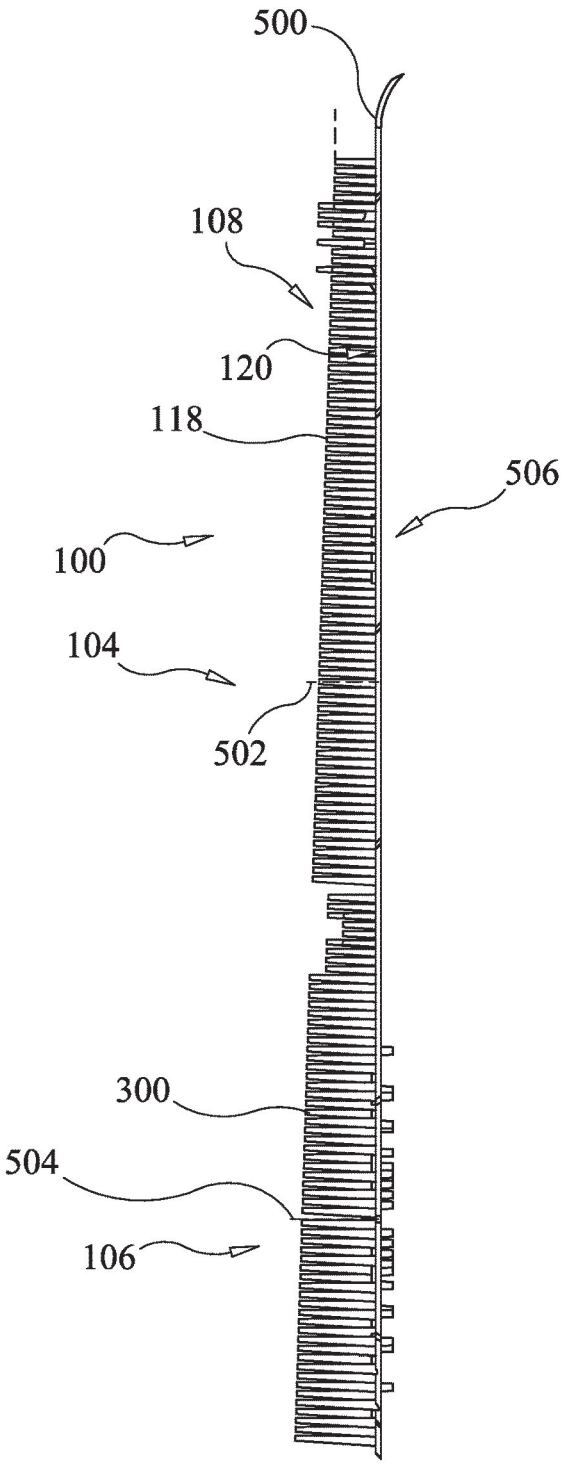

FIG. 5

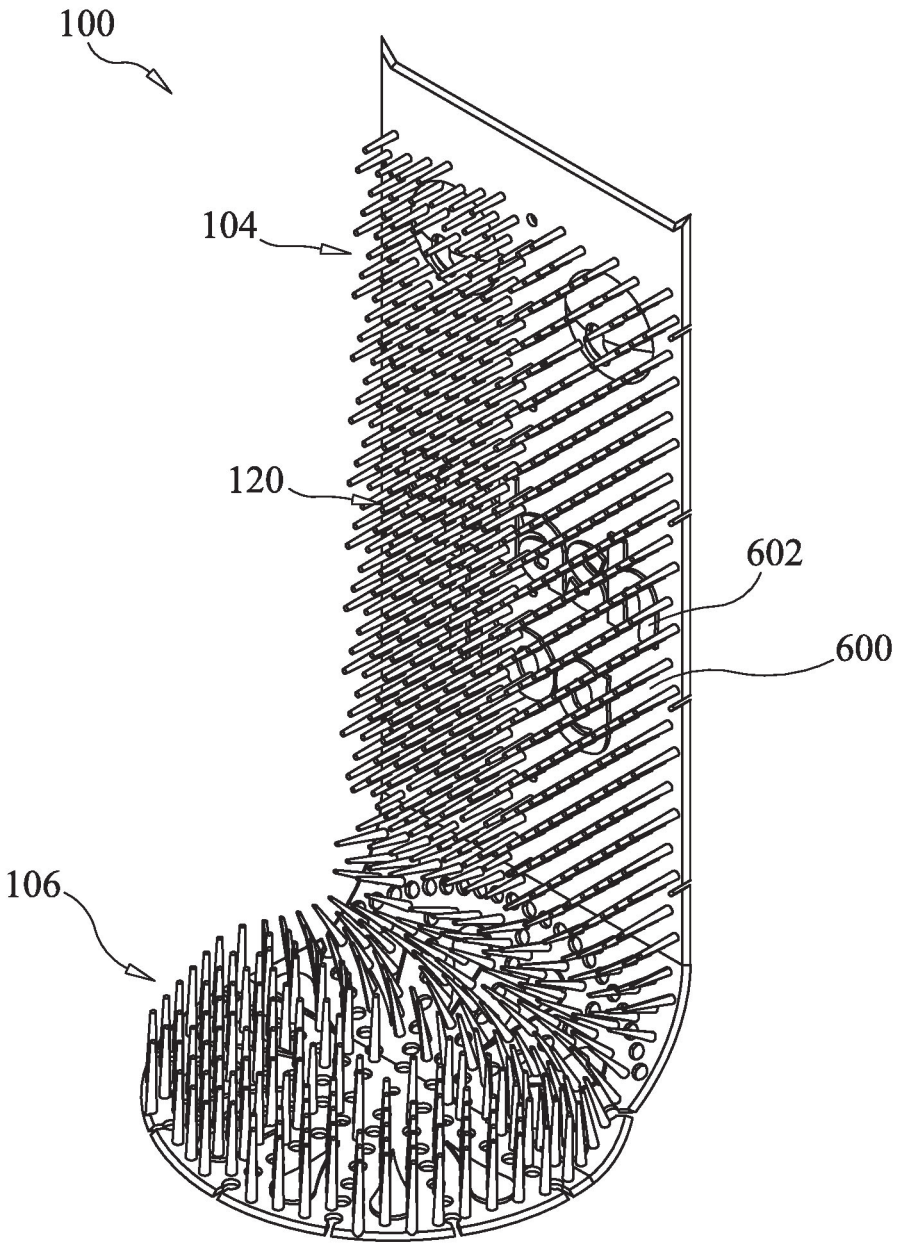

FIG. 6

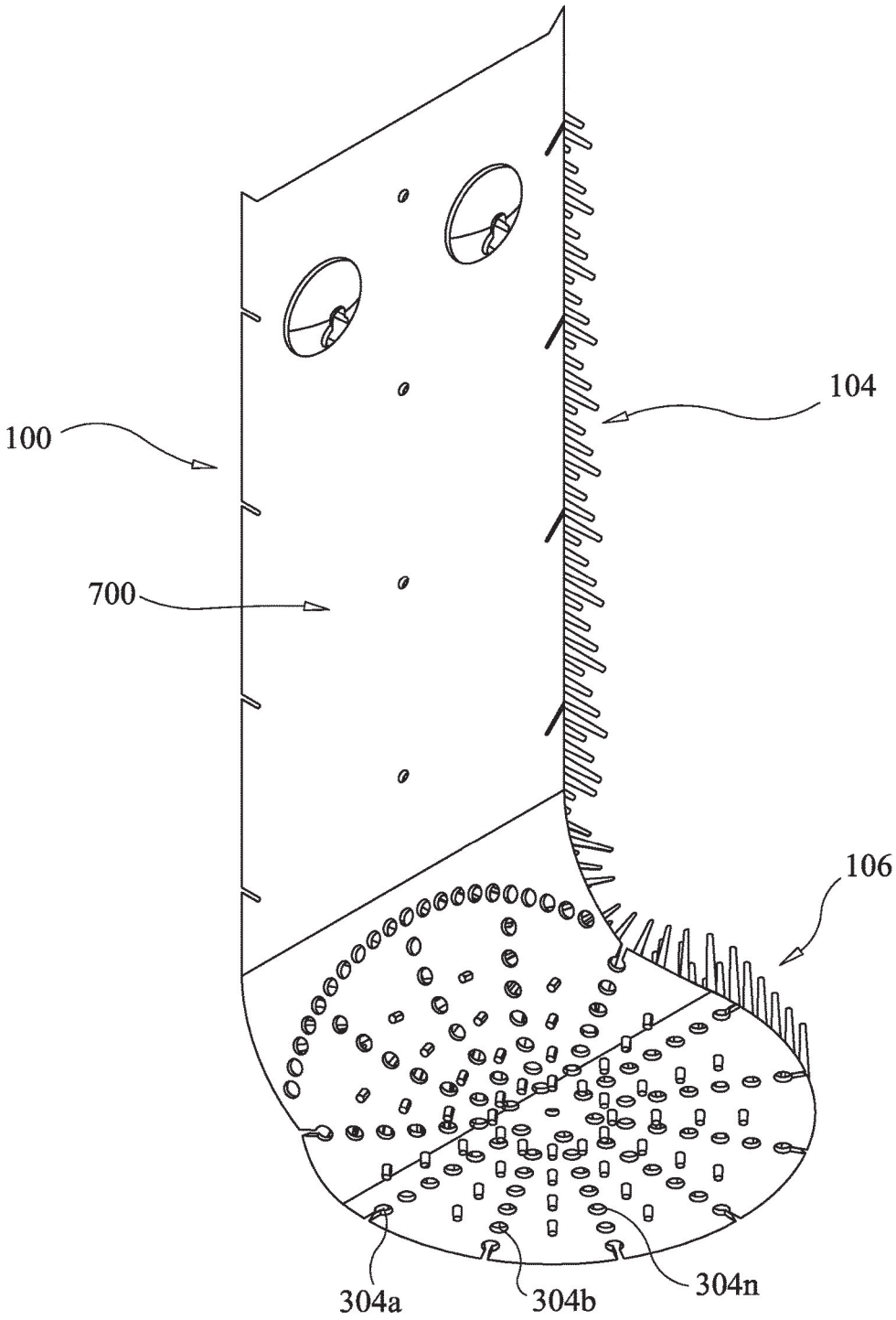

FIG. 7

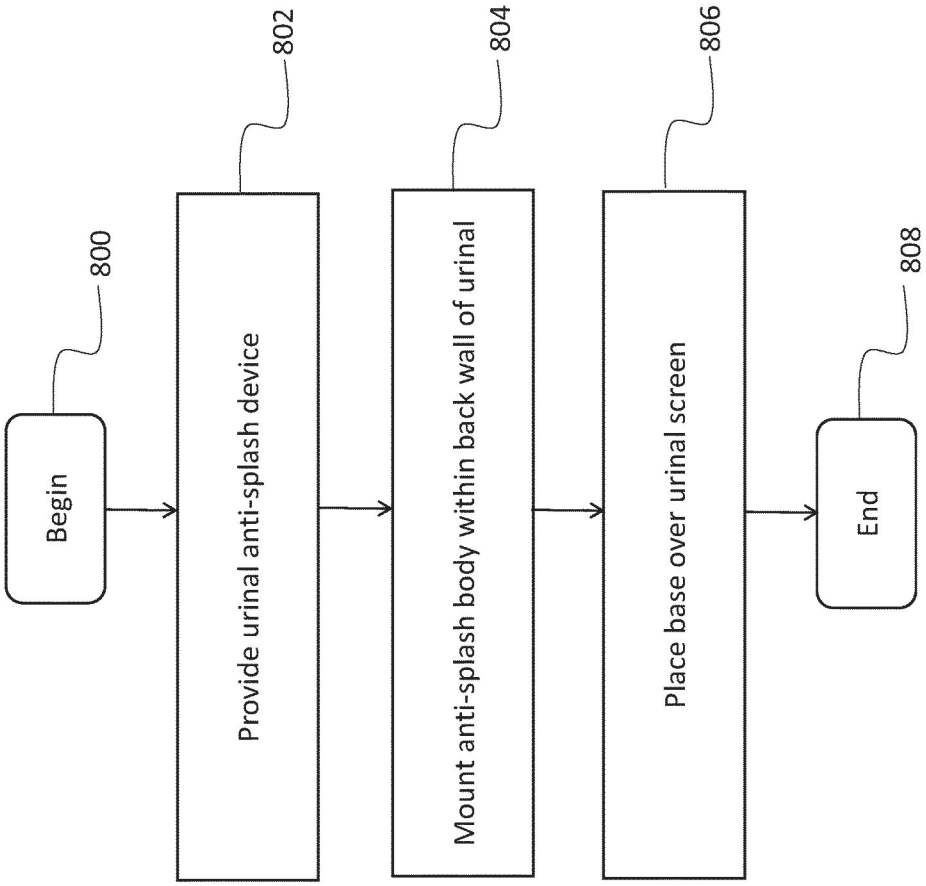
800
Begin
802
Provide urinal anti-splash device
804
Mount anti-splash body within back wall of urinal
806
Place base over urinal screen
808
End

FIG. 8

URINAL ANTI-SPLASH DEVICE

FIELD OF THE INVENTION

The present invention relates generally to urinal accessories, and, more particularly, relates to a urinal anti-splash device for placement within a urinal.

BACKGROUND OF THE INVENTION

A urinal, often installed for efficiency when compared to a general purpose toilet, is a sanitary plumbing fixture commonly located in male restrooms. The use of a urinal, in comparison to a general purpose toilet, is often more convenient for a user due to the absence of additional doors and locks. As an added convenience, urinals do not require a user to turn up a seat prior to use, which is both convenient and generally more sanitary than the toilet. Moreover, urinals occupy less space and consume less water per flush, or possibly no water at all, than a toilet which requires flushing.

Devices designed to be placed within urinals are well-known. For example, urinals found in public restrooms often have a plastic mesh guard to prevent large debris from entering the drain. Unfortunately, such plastic mesh guards fail to reduce or prevent the splashing of urine onto the user. In fact, such plastic mesh guards may actually increase the risk of the user being splashed by the urine as the urine ricochets from the plastic mesh guard. Moreover, these plastic mesh guards do not prevent the splashing of urine that is directed towards the back wall of the urinal.

Other known devices designed to be placed within urinals, often referred to as urinal screens or occasionally as urinal mats, are sized and shaped to cover either the urinal's back wall or the drain. Such urinal screens do not allow the user the option of covering both the back wall and the drain to prevent the urine from splashing onto the user from a maximum surface area of the urinal. Moreover, some urinal screens are made of a rigid material that may fail to conform to the various sizes and shapes of urinals.

Additional known devices designed for placement within a urinal often include protrusions that are densely compacted together, preventing a urine stream from flowing in a vertical direction toward the urinal screen. In this vein, such devices rely on the protrusions to break up the urine stream, leaving urine deposited on the protrusions, resulting in an unpleasant odor and the need for increased cleaning frequency of the device. Moreover, many urinal screens include urinal cakes or deodorizers which require costly and frequent replacement.

Therefore, a need exists to overcome the problems with the prior art as discussed above.

SUMMARY OF THE INVENTION

The invention provides a urinal anti-splash device that overcomes the hereinafore-mentioned disadvantages of the heretofore-known devices and methods of this general type and that provides a urinal anti-splash device sized and shaped to mate with a urinal back wall and a urinal screen to prevent urine from splashing on a user when urine is deposited in the direction of the urinal back wall and/or the urinal screen.

With the foregoing and other objects in view, there is provided, in accordance with the invention, a urinal anti-splash device including an anti-splash body sized and shaped to couple to at least a portion of a urinal, the anti-splash body having a first portion, a second portion opposite the first portion, a length extending from the first portion to the second portion, an upper surface extending the length, a base couplable to the first portion and configured to extend in a direction substantially perpendicular from the first portion, a first plurality of protrusions extending outwardly from the upper surface of the anti-splash body, and a second plurality of protrusions extending outwardly from the base, the second plurality of protrusions configured to extend in the direction substantially perpendicular from the first portion of the anti-splash body.

In accordance with another feature, an embodiment of the present invention includes the base of a shape different than a shape of the anti-splash body.

In accordance with a further feature of the present invention, the anti-splash body includes an elongated shape of a flexible material configured to couple to a back wall of a urinal.

In accordance with a further feature of the present invention, the urinal anti-splash device includes at least one fastener sized and shaped to orient the anti-splash body in a vertical direction parallel to a vertical direction of a urinal wall.

In accordance with yet another feature of the present invention, the base is removably coupled to the first portion.

In accordance with a further feature of the present invention, the urinal anti-splash device includes a perforated coupling region disposed between the first portion of the anti-splash body and the base, the perforated coupling region configured to translate the base from a first position parallel to the anti-splash body to a second position including the base being in the direction substantially perpendicular from the first portion of the anti-splash body.

In accordance with another feature of the present invention, the base is made of buoyant material.

In accordance with a further feature of the present invention, the anti-splash body is a rectangular-like shape and the base is a circular-like shape.

In accordance with another feature of the present invention, the first plurality of protrusions are of a variable length.

In accordance with another feature of the present invention, the first plurality of protrusions taper downwardly in a direction toward the upper surface of the anti-splash body.

In accordance with yet another feature, an embodiment of the present invention includes the urinal anti-splash device having an anti-splash body configured to couple to a urinal wall, the anti-splash body including a first portion, a second portion opposite the first portion, and a longitudinal length separating the first portion from the second portion, a base couplable to the first portion of the anti-splash body, the base sized and shaped to cover at least a portion of a urinal drain, a coupling region configured to translate the base between a first position including the base oriented in a direction parallel to the anti-splash body and a second position including the base oriented in a direction substantially perpendicular from the base, and a plurality of protrusions coupled to the anti-splash body and the base.

In accordance with another feature of the present invention, the anti-splash body is of a shape different than a shape of the base.

In accordance with a further feature of the present invention, the base is removably coupled to the anti-splash body.

In accordance with a further feature of the present invention, the coupling region includes a perforated edge.

In accordance with another feature of the present invention, the plurality of protrusions taper downwardly in a direction toward an upper surface of the anti-splash body and the base.

In accordance with yet another feature of the present invention, the anti-splash body includes a thermochromic material.

In accordance with the present invention, a method for mounting a urinal anti-splash device within a urinal includes providing a urinal anti-splash device having an anti-splash body sized and shaped to couple to at least a portion of a urinal, the anti-splash body including a first portion, a second portion opposite the first portion, a longitudinal length extending from the first portion to the second portion, and an upper surface extending the longitudinal length, a base couplable to the first portion and configured to extend in a direction substantially perpendicular from the first portion, a first plurality of protrusions extending outwardly from the upper surface of the anti-splash body, and a second plurality of protrusions extending outwardly from the base, the second plurality of protrusions configured to extend in the direction substantially perpendicular from the first portion of the anti-splash body, mounting the anti-splash body within a back wall of a urinal, and placing the base over a urinal screen.

In accordance with another feature of the present invention, the method may include removably coupling the anti-splash body from the base.

In accordance with a further feature of the present invention, the method may include bending the urinal anti-splash device at a location of a perforated coupling region disposed between the first portion of the anti-splash body and the base, the perforated coupling region configured to translate the base from a first position parallel to the anti-splash body to a second position including the base being in the direction substantially perpendicular from the first portion of the anti-splash body.

Although the invention is illustrated and described herein as embodied in a urinal anti-splash device, it is, nevertheless, not intended to be limited to the details shown because various modifications and structural changes may be made therein without departing from the spirit of the invention and within the scope and range of equivalents of the claims. Additionally, well-known elements of exemplary embodiments of the invention will not be described in detail or will be omitted so as not to obscure the relevant details of the invention.

Other features that are considered as characteristic for the invention are set forth in the appended claims. As required, detailed embodiments of the present invention are disclosed herein; however, it is to be understood that the disclosed embodiments are merely exemplary of the invention, which can be embodied in various forms. Therefore, specific structural and functional details disclosed herein are not to be interpreted as limiting, but merely as a basis for the claims and as a representative basis for teaching one of ordinary skill in the art to variously employ the present invention in virtually any appropriately detailed structure. Further, the terms and phrases used herein are not intended to be limiting; but rather, to provide an understandable description of the invention. While the specification concludes with claims defining the features of the invention that are regarded as novel, it is believed that the invention will be better understood from a consideration of the following description in conjunction with the drawing figures, in which like reference numerals are carried forward. The figures of the drawings are not drawn to scale.

Before the present invention is disclosed and described, it is to be understood that the terminology used herein is for the purpose of describing particular embodiments only and is not intended to be limiting. The terms "a" or "an," as used herein, are defined as one or more than one. The term "plurality," as used herein, is defined as two or more than two. The term "another," as used herein, is defined as at least a second or more. The terms "including" and/or "having," as used herein, are defined as comprising (i.e., open language). The term "coupled," as used herein, is defined as connected, although not necessarily directly, and not necessarily mechanically. The term "providing" is defined herein in its broadest sense, e.g., bringing/coming into physical existence, making available, and/or supplying to someone or something, in whole or in multiple parts at once or over a period of time.

As used herein, the terms "about" or "approximately" apply to all numeric values, whether or not explicitly indicated. These terms generally refer to a range of numbers that one of skill in the art would consider equivalent to the recited values (i.e., having the same function or result). In many instances these terms may include numbers that are rounded to the nearest significant figure. In this document, the term "longitudinal" should be understood to mean in a direction corresponding to an elongated direction of the body of the urinal anti-splash device in a direction from a ground surface toward a ceiling.

BRIEF DESCRIPTION OF THE DRAWINGS

The accompanying figures, where like reference numerals refer to identical or functionally similar elements throughout the separate views and which together with the detailed description below are incorporated in and form part of the specification, serve to further illustrate various embodiments and explain various principles and advantages all in accordance with the present invention.

FIG. **1** is an elevational front view of a urinal anti-splash device disposed in a urinal in accordance with the present invention;

FIG. **2** is an elevational front view of the urinal anti-splash device of FIG. **1** disposed outside of a urinal and depicting a base disposed in a direction substantially parallel to an anti-splash body in accordance with the present invention;

FIG. **3** is an elevational front view of the urinal anti-splash device of FIG. **1** depicting the base uncoupled from and disposed in a direction substantially perpendicular to the anti-splash body in accordance with the present invention;

FIG. **4** is a perspective view of the urinal anti-splash device of FIG. **1** depicting further features of the base in accordance with the present invention;

FIG. **5** is an elevational side view of the urinal anti-splash device of FIG. **1** depicting a plurality of protrusions of a variable length in accordance with the present invention;

FIG. **6** is a perspective view of the urinal anti-splash device of FIG. **1** depicting the urinal anti-splash device having a thermochromic material added to the urinal anti-splash device in accordance with the present invention;

FIG. **7** is a perspective rear view of the urinal anti-splash device of FIG. **1** depicting the anti-splash body having a substantially level rear surface and the base defining a plurality of apertures; and

FIG. **8** is a process flow diagram depicting a method of mounting a urinal anti-splash device within a urinal in accordance with one embodiment of the present invention.

DETAILED DESCRIPTION

While the specification concludes with claims defining the features of the invention that are regarded as novel, it is believed that the invention will be better understood from a

consideration of the following description in conjunction with the drawing figures, in which like reference numerals are carried forward. It is to be understood that the disclosed embodiments are merely exemplary of the invention, which can be embodied in various forms.

The present invention provides a novel and efficient urinal anti-splash device that prevents urine from splashing onto a user when the urine is deposited on the urinal wall, e.g., the urinal back wall, or in a direction toward the urinal drain. Advantageously, the urinal anti-splash device includes an anti-splash body and a base that may be separated from each other to provide a device that conforms to various types of urinals, while simultaneously covering a substantial portion of the overall surface area of the urinal. Embodiments of the invention also provide one or more protrusions that substantially span a longitudinal length of the anti-splash body and define one or more protrusion voids which allow the urine to flow in the direction toward the urinal drain.

Referring now to FIG. **1**, one embodiment of the present invention is shown in an elevational front view. FIG. **1** shows several advantageous features of the present invention, but, as will be described below, the invention can be provided in several shapes, sizes, combinations of features and components, and varying numbers and functions of the components. The first example of a urinal anti-splash device **100** placed within a urinal **102**, as shown in FIG. **1**, includes an anti-splash body **104** coupled to a base **106**. In one embodiment, the anti-splash body **104** is sized and shaped to couple to at least a portion of a urinal **102**, e.g., a standard sized urinal. The term "urinal" is defined herein in its broadest possible sense as a container or other receptacle normally found in a restroom and may include a standard sized adult urinal, a child's urinal, or the like. The urinal **102** may be of a shape that is, without limitation, rectangular, square, round, oval, or the like. It is understood that the urinal dimensions and shapes described herein are merely exemplary and not intended to be limiting.

In one embodiment, the portion of the urinal **102** configured to receive the anti-splash body **104** is a back wall **114** of the urinal **102**. In one embodiment, the back wall **114** may include a height of approximately 17.0-22.0 inches in length and a width that is approximately 9.0-14.0 inches in length. In other embodiments, the urinal **102** may include a length and a width that is outside of this range.

FIG. **1** depicts the anti-splash body **104** having a first portion **108**, a second portion **110** opposite the first portion **108**, and a length **112**, i.e., a longitudinal length, extending from the first portion **108** to the second portion **110**. In one embodiment, the length **112** permits the anti-splash body **104** to cover a substantial portion of the back wall **114** of the urinal **102** to prevent urine from splashing on a user when the urine strikes the anti-splash body **104**. The term "substantial portion" is defined herein as covering at least 40%-50% of the back wall **114** of the urinal **102**. In other embodiments, the length **112** covers less than the substantial portion of the back wall **114** of the urinal **102**.

In one embodiment, the anti-splash body **104** includes an elongated shape of a flexible material configured to couple to the urinal **102**. The term "elongated" is defined herein as having a length that is at least twice as long as a width. In other embodiments, the length may be less than twice as long as the width. For example, in one embodiment the length **112** is approximately 17.0-20.0 inches. In this embodiment, the anti-splash body may include a width **116** that is approximately 5.0-8.0 inches. In another embodiment, the length **112** may be approximately 13.0-16.0 inches and the width **116** may be approximately 3.0-6.0. In other embodiments, the length **112** and the width **116** may be outside of these ranges.

FIG. **1** depicts the elongated shape of the anti-splash body **104** being a rectangular-like shape. The term "rectangular-like" is defined herein as having at least one pair of opposing parallel sides of equal length. The term "rectangular-like" may encompass round or curved edges. In other embodiments, the anti-splash body **104** may be rectangular, square, round, oval, or another shape conducive for coupling to the back wall **114** of a urinal **102**.

In one embodiment, the anti-splash body **104** may be made of a material that is flexible and tough, such as DuPoint Elvax®250, PVC plastic, or the like. In other embodiments, the anti-splash body **104** may be composed of a composite material, a metallic material, or another material conducive for placement within a urinal. The material may or may not have elastically deformable properties (e.g., the ability to change its shape and return back to its static-state shape after its change in shape). In one advantageous embodiment, the material is a buoyant material that provides a base **106** that will rise above the water line where water remains in the urinal after flushing, thereby decreasing the risk of the urinal drain being blocked by the anti-splash device **100**. In other embodiments, the material may be a non-buoyant material.

In one embodiment, the urine is prevented from splashing onto the user when striking the anti-splash body **104** at least partly due to a first plurality of protrusions **118** being coupled to an upper surface **120** of the anti-splash body **104**. The term "protrusion" is defined herein as a part that extends away from the upper surface **120** and may include bristles, a wave pattern, one or more shapes, e.g., squares, or another configuration designed to prevent urine from splashing onto a user when using the anti-splash device **100**. In use, such as when a urine stream strikes the protrusions **118**, the urine may be broken apart by the protrusions **118**. Said another way, the anti-splash device **100** may not rely on a capillary action to reduce or prevent urine from splashing from the anti-splash device **100** onto a user.

Advantageously, the protrusions **118** define a plurality of protrusion voids **122** which permit the urine to effectively flow in a downward direction along the upper surface **120** toward the lower portion **124** of the urinal **102** which houses the urinal drain. In one embodiment, such as when the device **100** is disposed in a vertical direction with respect to the back wall **114** of the urinal **102**, gravity may assist in causing the urine to effectively flow in the downward direction toward the lower portion **124** of the urinal **102**. The protrusion voids **122** may also provide space for the protrusions **118** to bend and deflect when struck by the urine.

In order to effectively mount the anti-splash body **104** to the back wall **114**, the anti-splash body **104** includes at least one fastener **126** sized and shaped to orient the anti-splash body **104** in the vertical direction parallel to a vertical direction of the back wall **114**. FIG. **1** depicts the anti-splash body **104** mounted to the back wall **114** using a first suction cup coupled to the fastener **126** and a second suction cup coupled to a second fastener **128**. The fasteners **126**, **128** are depicted as apertures defined by the anti-splash body **104**. In other embodiments, the fasteners **126**, **128** may be adhesive, e.g., tape, hooks, or another type of fastener configured to mount the anti-splash body **104** in a stationary position relative to the back wall **114**.

With reference now to FIG. **2**, the base **106** is depicted as being coupled to the first portion **108** of the anti-splash body **104**. Generally speaking, the first portion **108** includes the

region extending approximately from a first end **200** to a midpoint along the length **112**. In the same vein, the second portion **110** includes the region extending approximately from a second end **202** to the midpoint along the length **112**. The midpoint is generally defined as being disposed approximately halfway between the first end **200** and the second end **202**.

With brief reference to FIG. **2**, in conjunction with FIG. **3**, in one advantageous embodiment, in order to effectively separate, e.g., removably couple, the anti-splash body **104** from the base **106** (FIG. **3**), the first end **200** includes a perforated coupling region **204** disposed between the first portion **108** and the base **106**. More specifically, the perforated coupling region **204** extends from the first portion **108** to the base **106** and includes a perforated edge **206** that facilitates in the ability to simply tear, split, or otherwise separate the first portion **108** of the anti-splash body **104** from the base **106** along the perforated edge **206**. The term "perforated" is defined herein as visibly displaying a hole, perforation, puncture, or other visible marking such that the user is provided with a visual indication of where the anti-splash body **104** may be uncoupled, i.e., separated, from the base **106**. Said another way, the anti-splash body **104** may be removably coupled from the base **106**. Advantageously, the perforated coupling region **204** not only allows the user to remove the base **106** from urinals with raised drainage points, but it also provides the user with the ability to independently move and position the anti-splash body **104** and the base **106** relative to select locations on a urinal.

In one embodiment, the perforated coupling region **204** is configured to translate the base **106** from a first position in which the base **106** is oriented in a direction parallel to the anti-splash body **104** (FIG. **2**) to a second position including the base **106** being oriented in a direction substantially perpendicular from the first portion **108** of the anti-splash body **104** (FIG. **3**). The term "substantially perpendicular" is defined herein as being disposed at an approximate 90 orientation (+/−15-20°) with respect to the first portion **108**. The base **106** may be translated from the first position to the second position when coupled to the anti-splash body **104** or alternatively, when separated from the anti-splash body **104**.

With reference again to FIG. **1**, the substantially perpendicular orientation of the base **106** enables the user to bend the urinal anti-splash device **100** in accordance with the dimensions of the urinal. In the same vein, this embodiment provides the urinal anti-splash device **100** that covers the urinal's back wall **114** and lower portion **124**, thereby reducing or preventing urine from splashing on the user when either or both the back wall **114** and the lower portion **124** are struck by a stream of urine. As an added advantage, the urinal anti-splash device **100** may be made from a single mold, effectively reducing the costs associated with making the urinal anti-splash device **100** in comparison to other existing urinal accessories that may require the manufacturing of separate components. In other embodiments, the anti-splash device **100**, e.g., the anti-splash body **104** and the base **106**, may be manufactured as separate components.

With reference now to FIG. **3**, a second plurality of protrusions **300** can be seen extending outwardly from the base **106**. The second plurality of protrusions **300** are configured to extend in the direction substantially perpendicular from the first portion **108** of the anti-splash body **104**. This configuration advantageously prevents urine from splashing onto the user when striking the base **106**. Similar to the protrusions **118** described above, in use, such as when a urine stream strikes the protrusions **300**, the urine may be broken apart by the protrusions **300**. Advantageously, the protrusions **300** define a plurality of protrusion voids **302** which permit the urine to effectively flow in the downward direction toward the urinal drain. In order to effectively allow the urine to flow into the urinal drain, the base **106** is depicted as defining a plurality of apertures **304** which define a urine flow path from the base **106** to the urinal drain. The protrusion voids **302** may also give space for the protrusions **300** to bend and deflect when struck by the urine.

With reference now to FIG. **4**, in order to prevent urine from bouncing off of the urinal drain screen in a direction toward the user, the base **106** is sized and shaped to cover at least a portion of the surface area of a urinal drain screen. In one embodiment, the portion may be at least 30% of the surface area of the urinal drain screen. In other embodiments, the base **106** may cover less than the 30% of the surface area of the urinal drain screen. In one non-limiting embodiment the base **106** includes a diameter **400** that is approximately 5.0-7.0 inches in length. In others embodiments, the diameter **400** may be outside of this range.

FIG. **4** depicts the shape of the base **106** as being a circular-like shape, i.e., different than the shape of the anti-splash body **104**. The term "circular-like" is defined herein as having at least two round edges. The circular-like shape is conducive for covering the urinal drain which is commonly a circular shape. In other embodiments, the shape of the base **106** and the shape of the anti-splash body **104** may be the same, e.g., rectangular, circular, square, round, oval, or another shape conducive for fitting within the urinal.

With reference now to FIG. **5**, an elevational side view of the urinal anti-splash device **100** is shown. More specifically, the first portion **108** is depicted having an angled region **500** to facilitate water and/or urine flow along the upper surface **120** in a direction toward the urinal drain. Additionally, the protrusions **118**, **300** are depicted as having a variable length which may also increase the facilitation of water and/or urine flow along the upper surface **120** toward the urinal drain. In other embodiments, the protrusions **118** and/or the protrusions **300** may have a uniform length. In one embodiment, the protrusions **118** include a protrusion length **502** that is between approximately 0.25 to 1.0 inch. In other embodiments, the protrusion length **502** may be outside of this range. In the same vein, in one embodiment, the protrusions **300** include a protrusion length **504** that is the same as the protrusion length **502**. In other embodiments, the protrusion length **504** may be outside of this range, e.g., between approximately 0.50 to 1.5 inches.

The protrusions **118**, **300** can be seen tapering downwardly in a direction toward the upper surface **120** of the anti-splash body **104** and the base **106** to further facilitate the water and/or urine flow. Said another way, the protrusions **118**, **300** are wider at the location of the base than at the top. Such configuration causes the protrusions **118**, **300** to break up the urine, while simultaneously allowing the urine to strike the upper surface **120** and travel in the downward direction toward the drain when the urinal anti-splash device **100** is disposed in the vertical orientation. The tapering configuration also decreases the complexity associated with the manufacturing process of the device **100** because the protrusions **118**, **300** may be relatively simply removed from the molding during the manufacturing process due to the lack of edges. In another embodiments, either the protrusions **118** or the protrusions **300** may include the tapering configuration. In other embodiments, the protrusions **118**, **300** may be of a uniform width and devoid of the tapering configuration.

In one embodiment, the urinal anti-splash device **100** may include a fragrance embedded within the material of the

urinal anti-splash device **100** during the manufacturing process, e.g., during the extrusion or molding phase of the manufacturing process. In another embodiment, the fragrance may be added to the material using a film process. The fragrance may be a volatile substance, such as a fragrant oil, an odor neutralizer, or the like. Such advantageous embodiments eliminate the need for the use of a room deodorizer or urinal cake that may be inconvenient and costly to consistently replace.

With reference now to FIG. **6**, the anti-splash body **104** is depicted as being coupled to and in the substantially perpendicular orientation relative to the base **106**. In one embodiment, the anti-splash body **104** and/or the base **106** made be made with a thermochromic material **600**. More specifically, a layer of thermochromic dye may be added to the upper surface **120** of the anti-splash body **104**. In a preferred embodiment, the layer of thermochromic dye may be added to the upper surface **120** of the anti-splash body **104** and the base **106**. The thermochromic dye may be, without limitation, spirolactone, fluoran, spiropyran, or fulgide, as commonly used by those of ordinary skill in the art. In other embodiments, another type of material may be used to form the thermochromic material **600**.

The thermochromic dye provides the user with the urinal anti-splash device **100** that changes color due to a change in temperature, e.g., that which occurs when urine strikes the thermochromic dye on the urinal anti-splash device **100**. Advantageously, the thermochromic dye is not only aesthetically appealing, but also allows a viewer, such as maintenance personnel, to observe rinse coverage and the flow of water in order to efficiently and effectively clean the anti-splash device **100**. As an added advantage, such configuration also allows businesses to advertise an insignia **602**, e.g., a business name and/or logo, which becomes visible when the anti-splash device **100** changes color during use.

FIG. **7** depicts a perspective rear view of the device **100** showing the anti-splash body **104** having a rear surface **700** that facilitates in the anti-splash body **104** being flush with the back wall **114** of the urinal (FIG. **1**). In one embodiment, the rear surface **700** is substantially level with the back wall **114** of the urinal. The term "substantially level" is defined herein as having a relatively flat surface with minimal sloping. In other embodiments, the rear surface **700** may include an uneven rear surface **700**, although the level rear surface **700** is preferred.

To effectuate the flow of a stream of urine along the urine flow path from the base **106** in a direction toward the urinal drain, FIG. **7** depicts the apertures **304***a-n* arranged in a substantially linear configuration. The indicator "a-n" is intended to represent any number of items, with "a" indicating **1** and "n" indicating any number greater than 1. The term "substantially linear" is defined herein as arranged in a nearly straight line allowing nominal deviation. The substantially linear configuration of the apertures **304***a-n* forces the stream of urine and/or water to be directed toward the urinal drain. In another embodiments, the apertures **304***a-n* may be arranged in another configuration, e.g., in a deviating configuration with respect to each other.

With reference now to the process flow chart of FIG. **8**, in conjunction with FIGS. **1-7**, an exemplary method of mounting a urinal anti-splash device within a urinal is shown. Although FIG. **8** shows a specific order of executing the process steps, the order of executing the steps may be changed relative to the order shown in certain embodiments. Also, two or more blocks shown in succession may be executed concurrently or with partial concurrence in some embodiments. Certain steps may also be omitted in FIG. **8** for the sake of brevity. In some embodiments, some or all of the process steps included in FIG. **8** can be combined into a single process.

In said process, the method begins as step **800** and immediately proceeds to step **802** of providing a urinal anti-splash device, such as the urinal anti-splash device **100** described above. More specifically, in one embodiment, the urinal anti-splash device **100** includes the anti-splash body **104** coupled to the base **106**. As discussed above, the anti-splash body **104** may also include the first plurality of protrusions **118** extending outwardly from the upper surface **120** of the anti-splash body **104** and the second plurality of protrusions **300** extending outwardly from the base **106**. The second plurality of protrusions **300** are configured to extend in the direction substantially perpendicular from the first portion **108** of the anti-splash body **104**.

In step **804**, the process continues with mounting the anti-splash body **104** within a back wall of a urinal. In one embodiment, such mounting may be performed using suctions cups coupled to at least one fastener disposed on the urinal anti-splash device **100**. In other embodiments, another type of fastener, e.g., adhesive, tape, hooks, etc., may be used to mount the anti-splash body **104** within the urinal.

Next, the process continues to the step of **806** of placing the base **106** over a urinal screen. Advantageously, in one embodiment, the process includes removably coupling, i.e., separating, the base **106** from the anti-splash body **104** such that the components may be independently positioned within the urinal. Such advantageous embodiment provides the urinal anti-splash device **100** that is not only conducive for placement within different size and shape urinals, but also may cover a portion of the surface area of the urinal, to prevent urine from splashing onto a user. The portion of the surface area of the urinal covered by the anti-splash device **100** may depend on the overall size of the urinal and the relative dimensions of the urinal anti-splash device **100**.

In another embodiment, the process may include bending the urinal anti-splash device **100** at a location of a perforated coupling region disposed between the first portion **108** of the anti-splash body **104** and the base **106**, as discussed above. The perforated coupling region is configured to translate the base **106** from a first position parallel to the anti-splash body **104** to a second position including the base **106** being in the direction substantially perpendicular from the first portion **108** of the anti-splash body **104**. In such configuration the base **106** may remain coupled to the anti-splash body **104**, or alternatively, may be detached from the anti-splash body **104**. The process then terminates at step **808**.

A urinal anti-splash device has been disclosed that not only includes an anti-splash body and a base that may be separated from each other to cover a back wall and a urinal screen to prevent urine from splashing onto a user of the urinal, but also provides an upper surface conducive for allowing the urine and/or water to flow in a downward direction toward the urinal drain.

What is claimed is:

1. A urinal anti-splash device comprising:

an anti-splash body sized and shaped to couple to at least a portion of a urinal, the anti-splash body including:

a first portion;

a second portion opposite the first portion;

a length extending from the first portion to the second portion; and

an upper surface extending the length;

a base couplable to the first portion and configured to extend in a direction substantially perpendicular from the first portion;

a first plurality of protrusions extending outwardly from the upper surface of the anti-splash body and which taper downwardly in a direction toward the upper surface of the anti-splash body; and

a second plurality of protrusions extending outwardly from the base, the second plurality of protrusions configured to extend in the direction substantially perpendicular from the first portion of the anti-splash body.

2. The urinal anti-splash device according to claim **1**, wherein:

the base is of a shape different than a shape of the anti-splash body.

3. The urinal anti-splash device according to claim **1**, wherein:

the anti-splash body includes an elongated shape of a flexible material configured to couple to a back wall of a urinal.

4. The urinal anti-splash device according to claim **1**, further comprising:

at least one fastener sized and shaped to orient the anti-splash body in a vertical direction parallel to a vertical direction of a urinal wall.

5. The urinal anti-splash device according to claim **1**, wherein:

the base is removably coupled to the first portion.

6. The urinal anti-splash device according to claim **1**, further comprising:

a perforated coupling region disposed between the first portion of the anti-splash body and the base, the perforated coupling region configured to translate the base from a first position parallel to the anti-splash body to a second position including the base being in the direction substantially perpendicular from the first portion of the anti-splash body.

7. The urinal anti-splash device according to claim **1**, wherein:

the base is made of buoyant material.

8. The urinal anti-splash device according to claim **1**, wherein:

the anti-splash body is a rectangular-like shape; and

the base is a circular-like shape.

9. The urinal anti-splash device according to claim **1**, wherein:

the first plurality of protrusions are of a variable length.

10. The urinal anti-splash device according to claim **1**, further comprising:

an angled portion at a top of the anti-splash body configured to facilitate flow along the upper surface.

11. A urinal anti-splash device comprising:

an anti-splash body configured to couple to a urinal wall, the anti-splash body including a first portion, a second portion opposite the first portion, and a longitudinal length separating the first portion from the second portion;

a base couplable to the first portion of the anti-splash body, the base sized and shaped to cover at least a portion of a urinal drain;

a coupling region configured to translate the base between a first position including the base oriented in a direction parallel to the anti-splash body and a second position including the base oriented in a direction substantially perpendicular from the base; and

a plurality of protrusions coupled to the anti-splash body and the base.

12. The urinal anti-splash device according to claim **11**, wherein:

the anti-splash body is of a shape different than a shape of the base.

13. The urinal anti-splash device according to claim **11**, wherein:

the base is removably coupled to the anti-splash body.

14. The urinal anti-splash device according to claim **11**, wherein:

the coupling region includes a perforated edge.

15. The urinal anti-splash device according to claim **11**, wherein:

the plurality of protrusions taper downwardly in a direction toward an upper surface of the anti-splash body and the base.

16. The urinal anti-splash device according to claim **11**, wherein:

the plurality of protrusions substantially span the longitudinal length and define a plurality of protrusion voids.

17. The urinal anti-splash device according to claim **11**, wherein:

the anti-splash body includes a thermochromic material.

18. A method of mounting a urinal anti-splash device within a urinal comprising:

providing a urinal anti-splash device including:

an anti-splash body sized and shaped to couple to at least a portion of a urinal, the anti-splash body including:

a first portion;

a second portion opposite the first portion;

a longitudinal length extending from the first portion to the second portion; and

an upper surface extending the longitudinal length;

a base couplable to the first portion and configured to extend in a direction substantially perpendicular from the first portion;

a coupling region disposed between the first portion of the anti-splash body and the base, the coupling region configured to allow the base to be moved from being substantially parallel to the anti-splash body in a first position to a second position substantially perpendicular to the anti-splash body;

a first plurality of protrusions extending outwardly from the upper surface of the anti-splash body; and

a second plurality of protrusions extending outwardly from the base, the second plurality of protrusions configured to extend in the direction substantially perpendicular from the first portion of the anti-splash body;

mounting the anti-splash body within a back wall of a urinal; and

placing the base over a urinal screen.

19. The method of mounting a urinal anti-splash device within a urinal according to claim **18**, further comprising:

removably coupling the anti-splash body from the base.

20. The method of mounting a urinal anti-splash device within a urinal according to claim **18**, further comprising:

bending the urinal anti-splash device at the coupling region.

* * * * *

Exhibit 4

US010294649B2

(12) **United States Patent**
Crevier

(10) **Patent No.: US 10,294,649 B2**
(45) **Date of Patent: *May 21, 2019**

(54) **URINAL ANTI-SPLASH DEVICE**

(71) Applicant: **Jeffrey Scott Crevier**, Fort Lauderdale, FL (US)

(72) Inventor: **Jeffrey Scott Crevier**, Fort Lauderdale, FL (US)

(*) Notice: Subject to any disclaimer, the term of this patent is extended or adjusted under 35 U.S.C. 154(b) by 0 days.

This patent is subject to a terminal disclaimer.

(21) Appl. No.: **16/023,862**

(22) Filed: **Jun. 29, 2018**

(65) **Prior Publication Data**

US 2018/0305916 A1 Oct. 25, 2018

Related U.S. Application Data

(63) Continuation of application No. 15/342,543, filed on Nov. 3, 2016, now Pat. No. 10,036,154.

(51) **Int. Cl.**
E03D 13/00 (2006.01)

(52) **U.S. Cl.**
CPC ***E03D 13/005*** (2013.01)

(58) **Field of Classification Search**
CPC E03D 9/00
USPC 4/300, 300.3
See application file for complete search history.

(56) **References Cited**

U.S. PATENT DOCUMENTS

4,671,976 A 6/1987 Vidal
4,866,793 A 9/1989 Luedtke et al.
D329,893 S 9/1992 Luedtke et al.
5,313,672 A 5/1994 Luedtke et al.
5,398,347 A 3/1995 Luedtke et al.
D393,896 S 4/1998 Wagner et al.
5,774,905 A 7/1998 Wager et al.
5,809,590 A 9/1998 Williams et al.
D427,295 S 6/2000 Wagner
6,550,075 B1 4/2003 Brannon, III
D639,410 S 6/2011 Ramirez
8,043,498 B2 10/2011 Rueda
8,056,153 B2 11/2011 Ruedas
D678,482 S 3/2013 Williams
8,856,976 B1 10/2014 Niedzielski, III
8,856,977 B2 10/2014 Ramirez
(Continued)

OTHER PUBLICATIONS

Examination Report from the European Union Intellectual Property Office dated Oct. 4, 2018, pp. 1-5.

Primary Examiner — Lori Baker
(74) *Attorney, Agent, or Firm* — The Concept Law Group, P.A.; Scott M. Garrett; Scott D. Smiley

(57) **ABSTRACT**

A urinal anti-splash device including an anti-splash body sized and shaped to couple to at least a portion of a urinal. The anti-splash body may include a first portion, a second portion opposite the first portion, a longitudinal length extending from the first portion to the second portion, and an front surface extending the longitudinal length. The urinal anti-splash device also includes a base coupled to the first portion and configured to extend in a direction substantially perpendicular from the first portion. The urinal anti-splash device further includes a first plurality of protrusions extending outwardly from the front surface of the anti-splash body and a second plurality of protrusions extending outwardly from the base, the second plurality of protrusions configured to extend in the direction substantially perpendicular from the first portion of the anti-splash body.

20 Claims, 8 Drawing Sheets

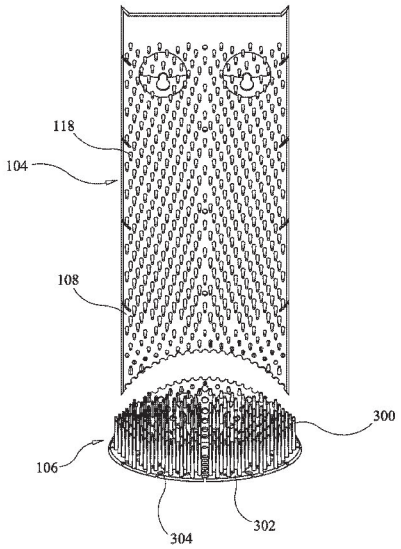

(56) **References Cited**

U.S. PATENT DOCUMENTS

D787,031	S	5/2017	Morgan-Williams	
10,036,154	B2 *	7/2018	Crevier	E03D 13/005
2004/0093662	A1	5/2004	Zhu	
2013/0000027	A1	1/2013	San Luis et al.	
2015/0047114	A1	2/2015	Ramirez	
2015/0143624	A1	5/2015	Irving	

* cited by examiner

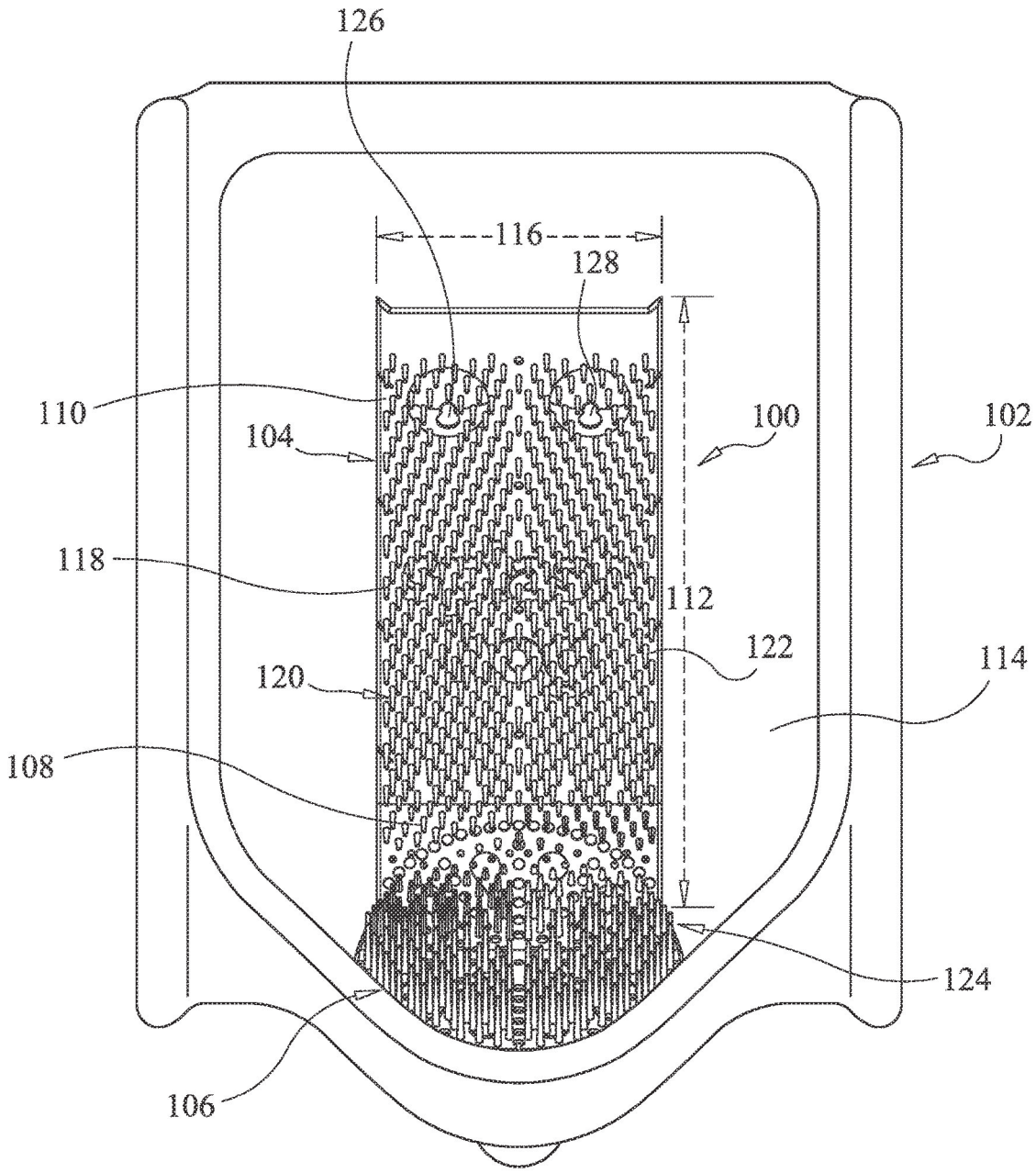

FIG. 1

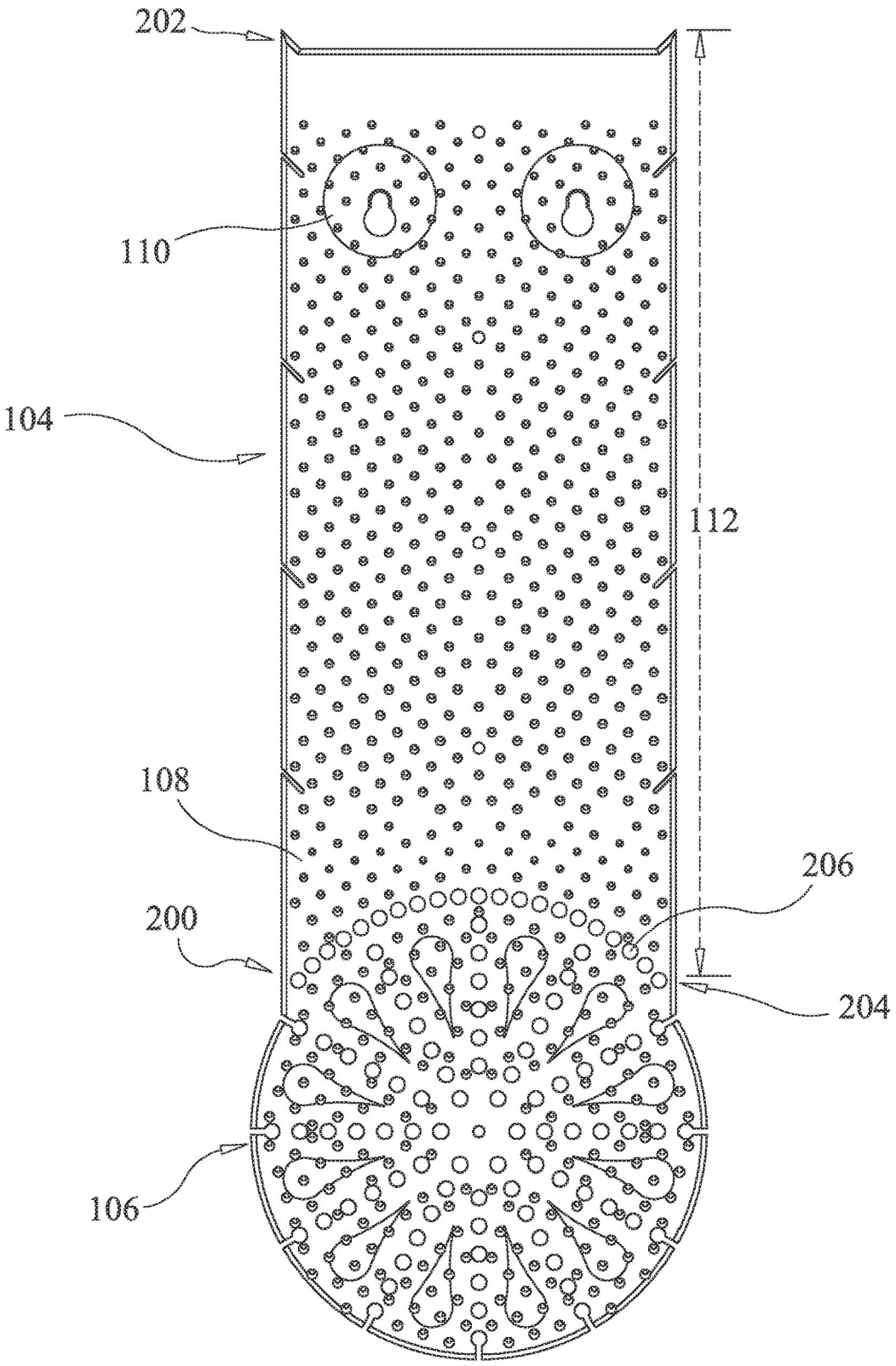

FIG. 2

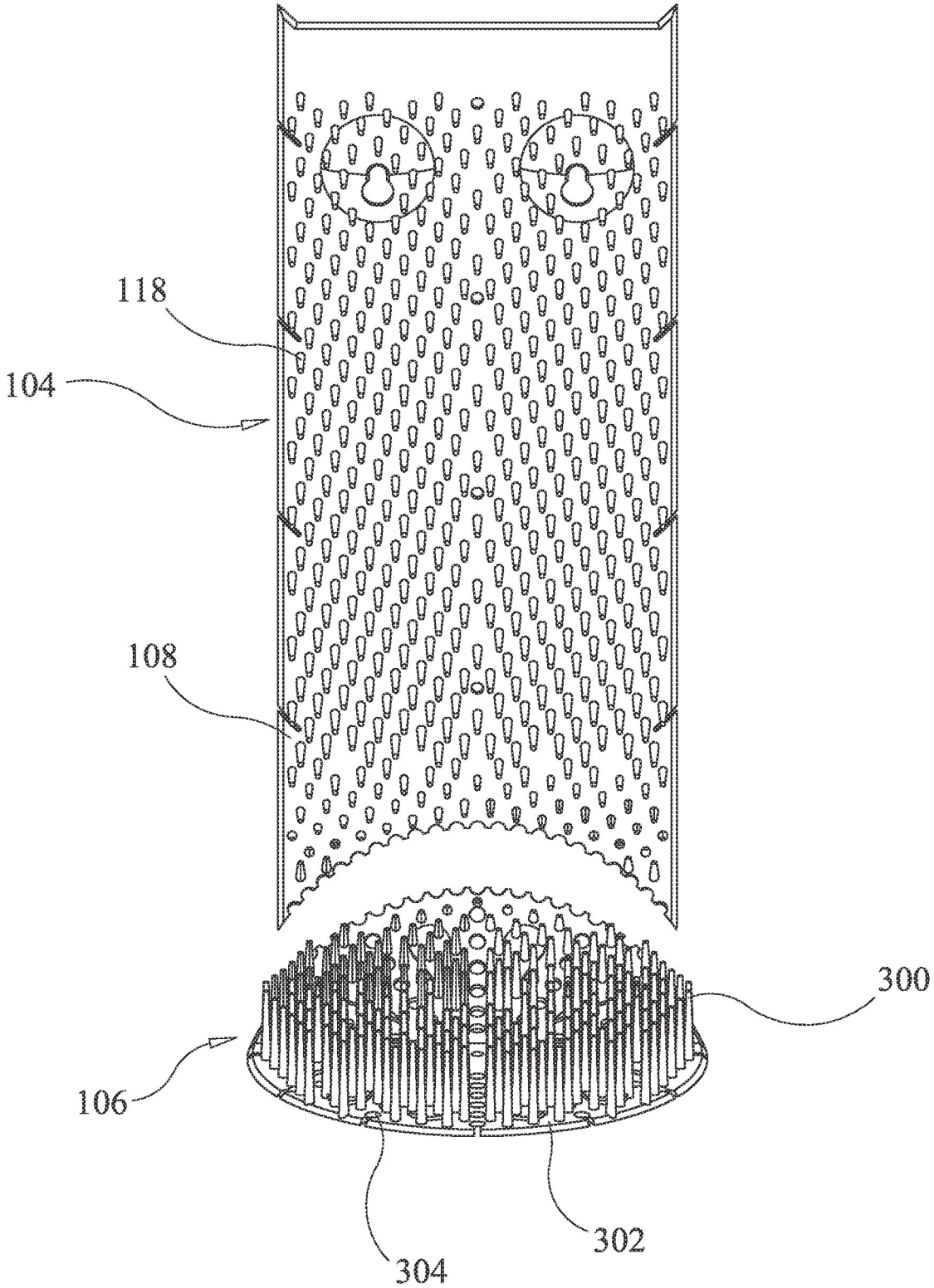

FIG. 3

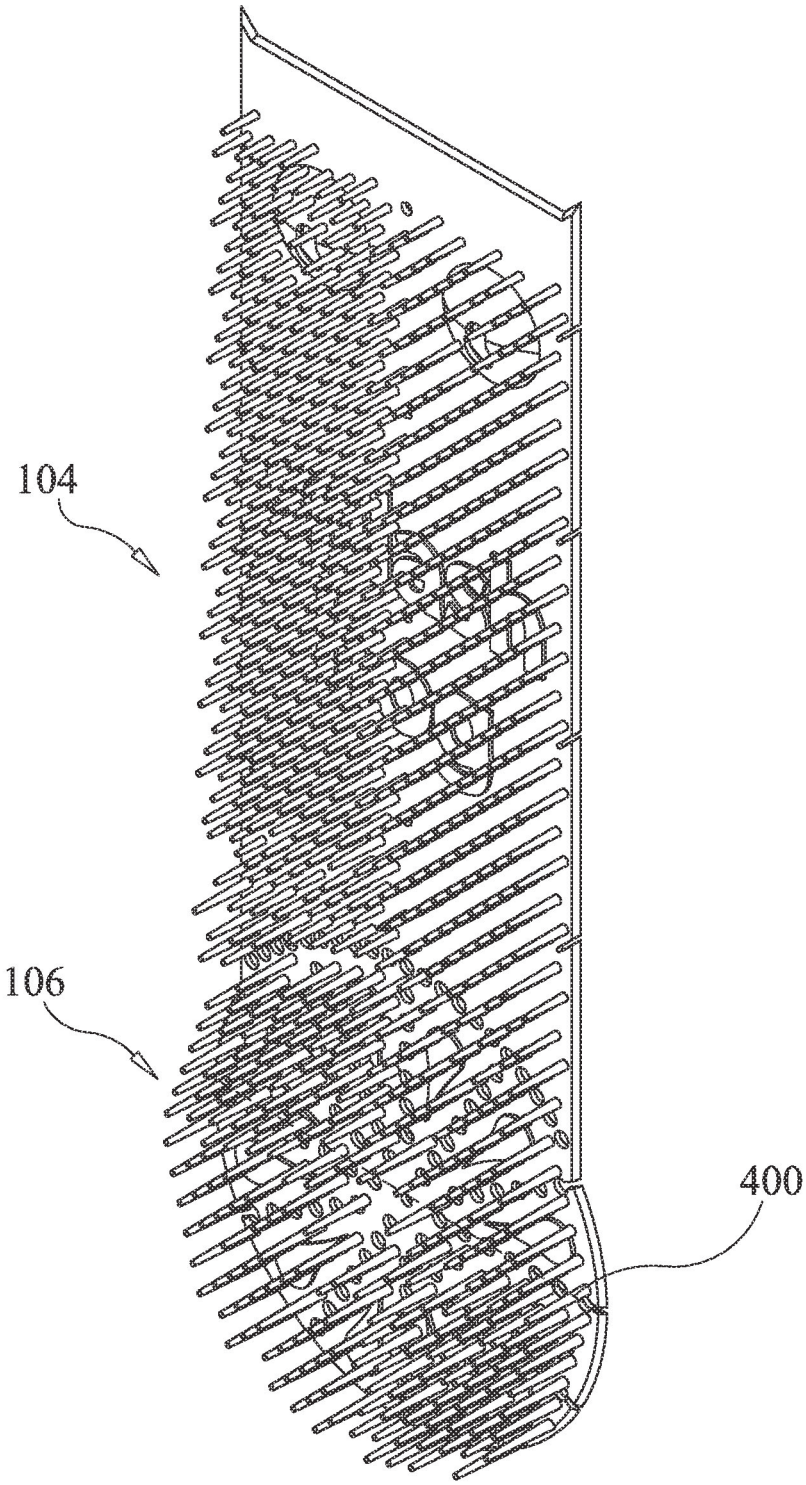

FIG. 4

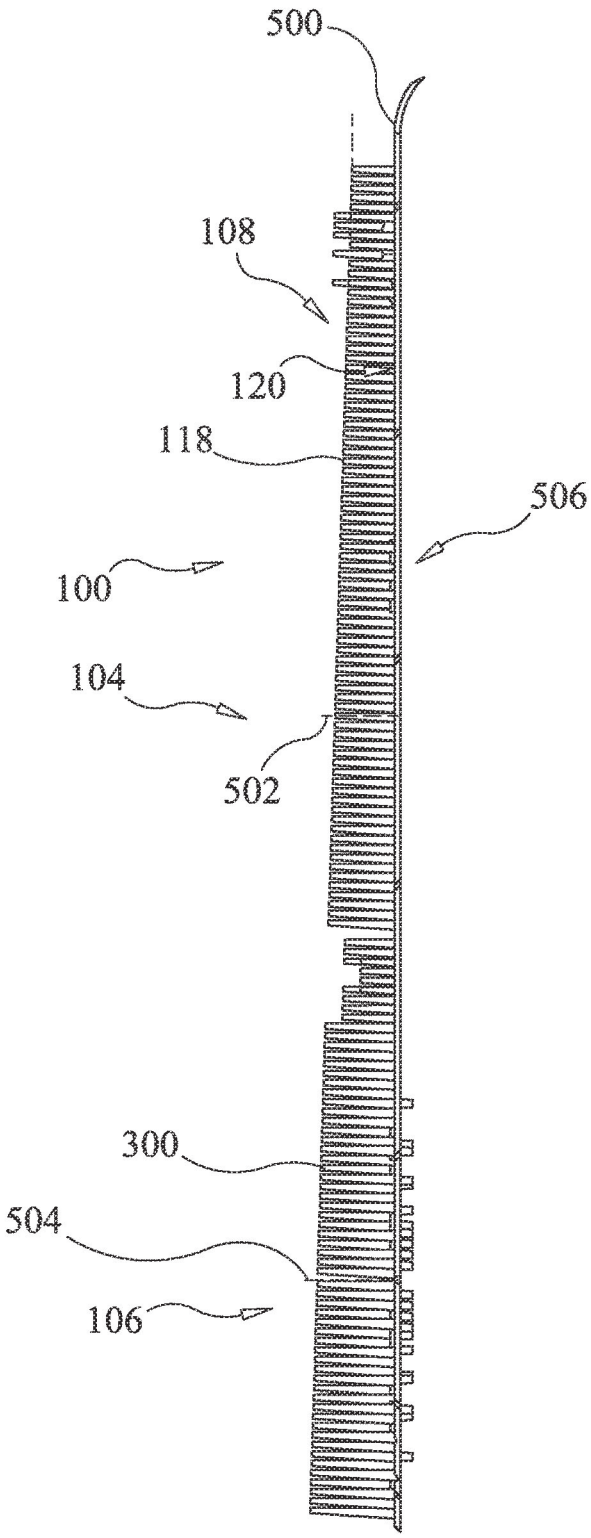

FIG. 5

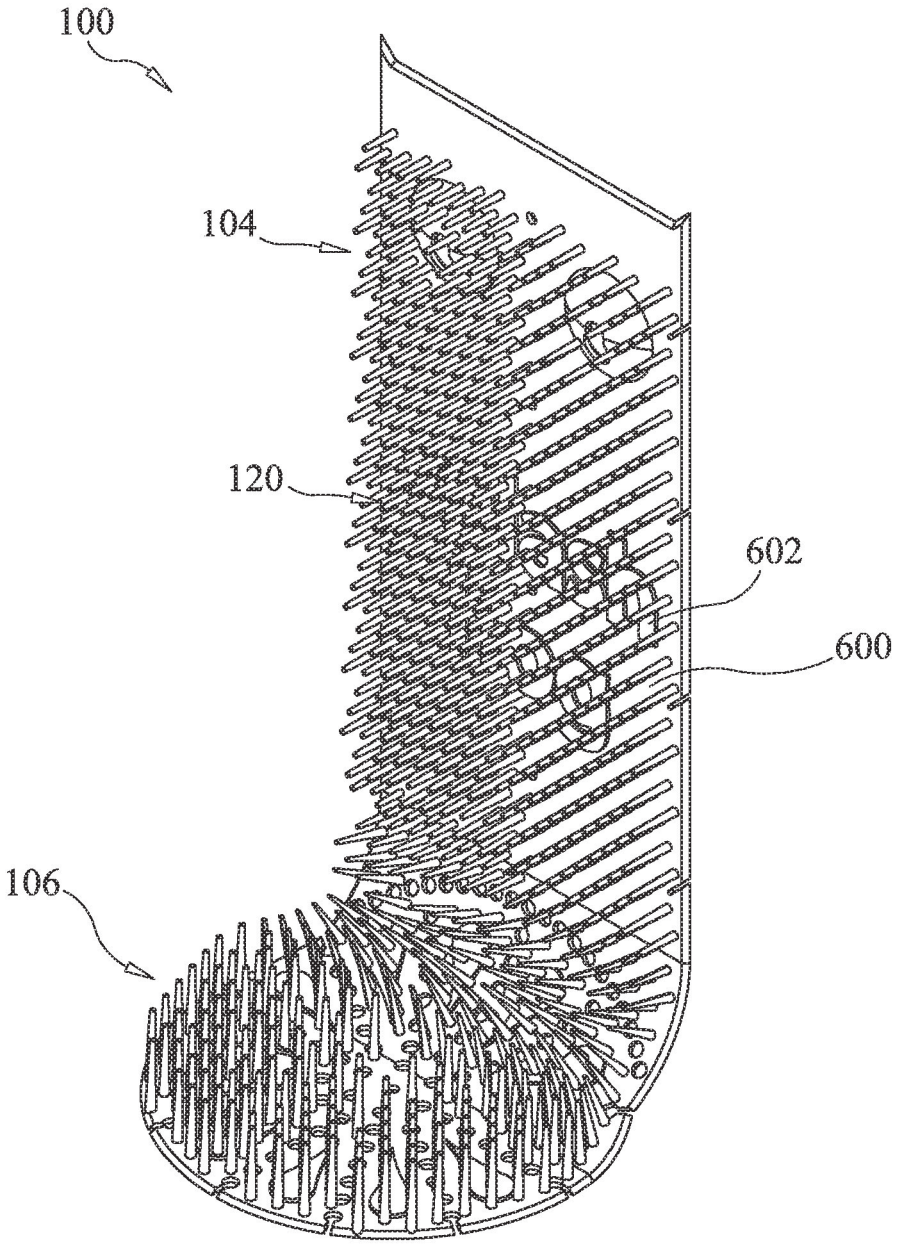

FIG. 6

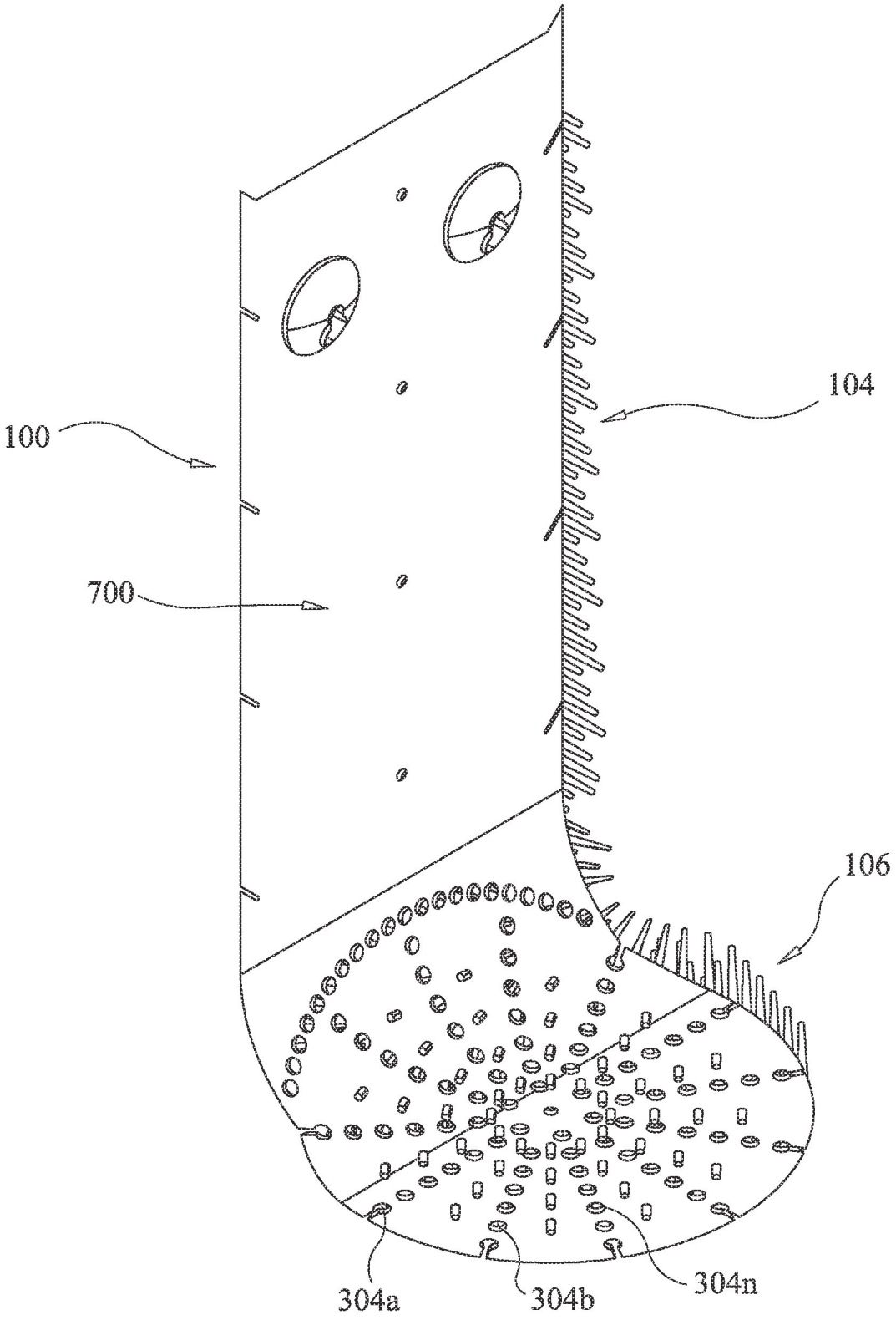

FIG. 7

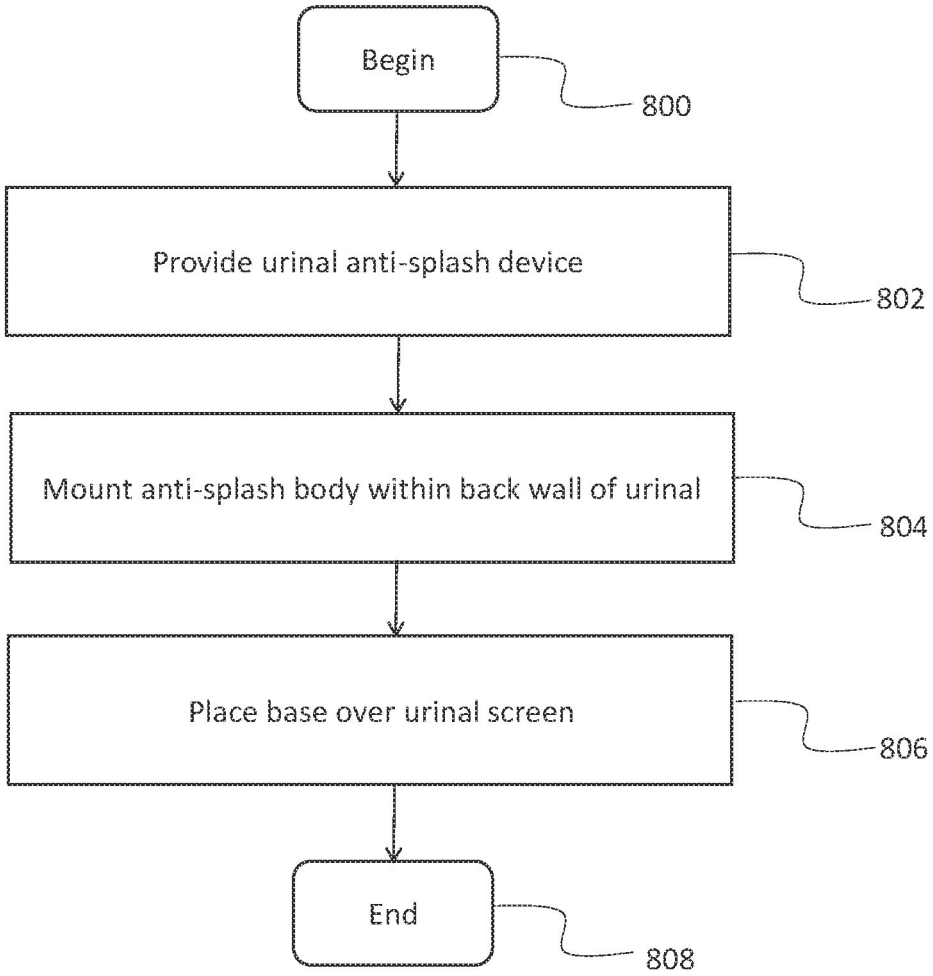
Begin
800
Provide urinal anti-splash device
802
Mount anti-splash body within back wall of urinal
804
Place base over urinal screen
806
End
808

FIG. 8

URINAL ANTI-SPLASH DEVICE

CROSS REFERENCE

This application is a continuation of U.S. application Ser. No. 15/342,543, titled "Urinal Anti-Splash Device," filed Nov. 3, 2016, the entirety of which is hereby incorporated by reference.

FIELD OF THE INVENTION

The present invention relates generally to urinal accessories, and, more particularly, relates to a urinal anti-splash device for placement within a urinal.

BACKGROUND OF THE INVENTION

A urinal, often installed for efficiency when compared to a general purpose toilet, is a sanitary plumbing fixture commonly located in male restrooms. The use of a urinal, in comparison to a general purpose toilet, is often more convenient for a user due to the absence of additional doors and locks. As an added convenience, urinals do not require a user to turn up a seat prior to use, which is both convenient and generally more sanitary than the toilet. Moreover, urinals occupy less space and consume less water per flush, or possibly no water at all, than a toilet which requires flushing.

Devices designed to be placed within urinals are well-known. For example, urinals found in public restrooms often have a plastic mesh guard to prevent large debris from entering the drain. Unfortunately, such plastic mesh guards fail to reduce or prevent the splashing of urine onto the user. In fact, such plastic mesh guards may actually increase the risk of the user being splashed by the urine as the urine ricochets from the plastic mesh guard. Moreover, these plastic mesh guards do not prevent the splashing of urine that is directed towards the back wall of the urinal.

Other known devices designed to be placed within urinals, often referred to as urinal screens or occasionally as urinal mats, are sized and shaped to cover either the urinal's back wall or the drain. Such urinal screens do not allow the user the option of covering both the back wall and the drain to prevent the urine from splashing onto the user from a maximum surface area of the urinal. Moreover, some urinal screens are made of a rigid material that may fail to conform to the various sizes and shapes of urinals.

Additional known devices designed for placement within a urinal often include protrusions that are densely compacted together, preventing a urine stream from flowing in a vertical direction toward the urinal screen. In this vein, such devices rely on the protrusions to break up the urine stream, leaving urine deposited on the protrusions, resulting in an unpleasant odor and the need for increased cleaning frequency of the device. Moreover, many urinal screens include urinal cakes or deodorizers which require costly and frequent replacement.

Therefore, a need exists to overcome the problems with the prior art as discussed above.

SUMMARY OF THE INVENTION

The invention provides a urinal anti-splash device that overcomes the hereinafore-mentioned disadvantages of the heretofore-known devices and methods of this general type and that provides a urinal anti-splash device sized and shaped to mate with a urinal back wall and a urinal screen

to prevent urine from splashing on a user when urine is deposited in the direction of the urinal back wall and/or the urinal screen.

With the foregoing and other objects in view, there is provided, in accordance with the inventive embodiments of the invention, a urinal anti-splash device that includes an anti-splash body that is configured to be mounted vertically on a back wall of a urinal and which has a plurality of protrusions that extend from a front surface of the anti-splash body. The urinal anti-splash device can further include a base that is attached to the anti-splash body at a coupling region formed between the base and the anti-splash body. The base can be configured to cover at least a portion of a urinal drain, and can have a plurality of protrusions that extend away from the base on a surface of the base that is contiguous with the front surface of the anti-splash body. The coupling region can be configured to allow the base to move between a first position, including the base oriented in a direction parallel to the anti-splash body, and a second position including the base oriented in a direction substantially perpendicular from the base.

In accordance with another feature, some embodiments can include that the anti-splash body is of a shape different than a shape of the base.

In accordance with another feature, some embodiments can include that the base is removably coupled to the anti-splash body at the coupling region.

In accordance with another feature, some embodiments can include that the coupling region includes perforations between the base and the anti-splash body.

In accordance with another feature, some embodiments can include that the plurality of protrusions taper downwardly in a direction toward an front surface of the anti-splash body and the base.

In accordance with another feature, some embodiments can include that the plurality of protrusions on the anti-splash body substantially span a longitudinal length of the anti-splash body and define a plurality of protrusion voids between the protrusions of the plurality of protrusions.

In accordance with another feature, some embodiments can include that the anti-splash body includes a thermochromic material.

There is further provided in accordance with some inventive embodiments of the invention, a urinal anti-splash device that includes an anti-splash body that is configured to be mounted on a back wall of a urinal. The anti-splash body can include a plurality of protrusions that extend from a front surface of the anti-splash body, and at least some of the protrusions have a base at the front surface of the anti-splash body that is wider than a top of the protrusion at the opposite end of the protrusion. The urinal anti-splash device can further include a base that is attached to the anti-splash body and which is configured to extend in a direction substantially perpendicular from the anti-splash body to cover a drain of a urinal, The base can further include a plurality of protrusions that extend outwardly from the base, the plurality of protrusions of the base are arranged to extend in a direction substantially perpendicular from plurality of protrusions of the anti-splash body.

In accordance with another feature, some embodiments can include that the base is of a shape different than a shape of the anti-splash body.

In accordance with another feature, some embodiments can include that the anti-splash body includes an elongated shape of a flexible material.

In accordance with another feature, some embodiments can further include at least one fastener that is sized and

shaped to orient the anti-splash body in a vertical direction parallel to a vertical direction of a urinal wall.

In accordance with another feature, some embodiments can include that the base is removably coupled to the first portion by a row of perforations between the base and the anti-splash body.

In accordance with another feature, some embodiments can further include a perforated coupling region disposed between the anti-splash body and the base. The perforated coupling region can be configured to allow the base move from a first position parallel to the anti-splash body to a second position including the base being in the direction substantially perpendicular from the first portion of the anti-splash body.

In accordance with another feature, some embodiments can include that the base is made of buoyant material.

In accordance with another feature, some embodiments can include that the anti-splash body is a rectangular-like shape, and the base is a circular-like shape.

In accordance with another feature, some embodiments can include that the plurality of protrusions on the anti-splash body are of a variable length.

In accordance with another feature, some embodiments can further include an angled surface at a top of the anti-splash body that is configured to direct a flow of water from the back wall of the urinal over the front surface of the anti-splash body when the anti-splash device is mounted in the urinal.

There is further provided in accordance with some inventive embodiments of the invention, a method of mounting a urinal anti-splash device within a urinal that includes providing a urinal anti-splash device which includes an anti-splash body configured to be mounted on a back wall of a urinal. The anti-splash body can include a plurality of protrusions extending from a front surface of the anti-splash body. At least some of the protrusions can have a base at the front surface of the anti-splash body that is wider than a top of the protrusion at the opposite end of the protrusion. Providing the urinal anti-splash device can further include providing the urinal anti-splash device with a base that is attached to the anti-splash body and which is configured to extend in a direction substantially perpendicular from the first portion to cover a drain of a urinal, and which further includes a plurality of protrusions extending outwardly from the base. The second plurality of protrusions can be arranged to extend in a direction substantially perpendicular from plurality of protrusions of the anti-splash body. The method can further include mounting the anti-splash body on the back wall of a urinal, and placing the base over a urinal drain.

In accordance with another feature, some embodiments can include providing the urinal anti-splash device with the base being removably coupled to the anti-splash body.

In accordance with another feature, some embodiments can include bending the urinal anti-splash device at a perforated coupling region disposed between the anti-splash body and the base, the perforated coupling region configured to allow the base to move relative to the anti-splash body, including to move from a first position parallel to the anti-splash body to a second position substantially perpendicular from the anti-splash body.

Although the invention is illustrated and described herein as embodied in a urinal anti-splash device, it is, nevertheless, not intended to be limited to the details shown because various modifications and structural changes may be made therein without departing from the spirit of the invention and within the scope and range of equivalents of the claims. Additionally, well-known elements of exemplary embodiments of the invention will not be described in detail or will be omitted so as not to obscure the relevant details of the invention.

Other features that are considered as characteristic for the invention are set forth in the appended claims. As required, detailed embodiments of the present invention are disclosed herein; however, it is to be understood that the disclosed embodiments are merely exemplary of the invention, which can be embodied in various forms. Therefore, specific structural and functional details disclosed herein are not to be interpreted as limiting, but merely as a basis for the claims and as a representative basis for teaching one of ordinary skill in the art to variously employ the present invention in virtually any appropriately detailed structure. Further, the terms and phrases used herein are not intended to be limiting; but rather, to provide an understandable description of the invention. While the specification concludes with claims defining the features of the invention that are regarded as novel, it is believed that the invention will be better understood from a consideration of the following description in conjunction with the drawing figures, in which like reference numerals are carried forward. The figures of the drawings are not drawn to scale.

Before the present invention is disclosed and described, it is to be understood that the terminology used herein is for the purpose of describing particular embodiments only and is not intended to be limiting. The terms "a" or "an," as used herein, are defined as one or more than one. The term "plurality," as used herein, is defined as two or more than two. The term "another," as used herein, is defined as at least a second or more. The terms "including" and/or "having," as used herein, are defined as comprising (i.e., open language). The term "coupled," as used herein, is defined as connected, although not necessarily directly, and not necessarily mechanically. The term "providing" is defined herein in its broadest sense, e.g., bringing/coming into physical existence, making available, and/or supplying to someone or something, in whole or in multiple parts at once or over a period of time.

As used herein, the terms "about" or "approximately" apply to all numeric values, whether or not explicitly indicated. These terms generally refer to a range of numbers that one of skill in the art would consider equivalent to the recited values (i.e., having the same function or result). In many instances these terms may include numbers that are rounded to the nearest significant figure. In this document, the term "longitudinal" should be understood to mean in a direction corresponding to an elongated direction of the body of the urinal anti-splash device in a direction from a ground surface toward a ceiling.

BRIEF DESCRIPTION OF THE DRAWINGS

The accompanying figures, where like reference numerals refer to identical or functionally similar elements throughout the separate views and which together with the detailed description below are incorporated in and form part of the specification, serve to further illustrate various embodiments and explain various principles and advantages all in accordance with the present invention.

FIG. **1** is an elevational front view of a urinal anti-splash device disposed in a urinal in accordance with the present invention;

FIG. **2** is an elevational front view of the urinal anti-splash device of FIG. **1** disposed outside of a urinal and depicting

a base disposed in a direction substantially parallel to an anti-splash body in accordance with the present invention;

FIG. **3** is an elevational front view of the urinal anti-splash device of FIG. **1** depicting the base uncoupled from and disposed in a direction substantially perpendicular to the anti-splash body in accordance with the present invention;

FIG. **4** is a perspective view of the urinal anti-splash device of FIG. **1** depicting further features of the base in accordance with the present invention;

FIG. **5** is an elevational side view of the urinal anti-splash device of FIG. **1** depicting a plurality of protrusions of a variable length in accordance with the present invention;

FIG. **6** is a perspective view of the urinal anti-splash device of FIG. **1** depicting the urinal anti-splash device having a thermochromic material added to the urinal anti-splash device in accordance with the present invention;

FIG. **7** is a perspective rear view of the urinal anti-splash device of FIG. **1** depicting the anti-splash body having a substantially level rear surface and the base defining a plurality of apertures; and

FIG. **8** is a process flow diagram depicting a method of mounting a urinal anti-splash device within a urinal in accordance with one embodiment of the present invention.

DETAILED DESCRIPTION

While the specification concludes with claims defining the features of the invention that are regarded as novel, it is believed that the invention will be better understood from a consideration of the following description in conjunction with the drawing figures, in which like reference numerals are carried forward. It is to be understood that the disclosed embodiments are merely exemplary of the invention, which can be embodied in various forms.

The present invention provides a novel and efficient urinal anti-splash device that prevents urine from splashing onto a user when the urine is deposited on the urinal wall, e.g., the urinal back wall, or in a direction toward the urinal drain. Advantageously, the urinal anti-splash device includes an anti-splash body and a base that may be separated from each other to provide a device that conforms to various types of urinals, while simultaneously covering a substantial portion of the overall surface area of the urinal. Embodiments of the invention also provide one or more protrusions that substantially span a longitudinal length of the anti-splash body and define one or more protrusion voids which allow the urine to flow in the direction toward the urinal drain.

Referring now to FIG. **1**, one embodiment of the present invention is shown in an elevational front view. FIG. **1** shows several advantageous features of the present invention, but, as will be described below, the invention can be provided in several shapes, sizes, combinations of features and components, and varying numbers and functions of the components. The first example of a urinal anti-splash device **100** placed within a urinal **102**, as shown in FIG. **1**, includes an anti-splash body **104** coupled to a base **106**. In one embodiment, the anti-splash body **104** is sized and shaped to couple to at least a portion of a urinal **102**, e.g., a standard sized urinal. The term "urinal" is defined herein in its broadest possible sense as a container or other receptacle normally found in a restroom and may include a standard sized adult urinal, a child's urinal, or the like. The urinal **102** may be of a shape that is, without limitation, rectangular, square, round, oval, or the like. It is understood that the urinal dimensions and shapes described herein are merely exemplary and not intended to be limiting.

In one embodiment, the portion of the urinal **102** configured to receive the anti-splash body **104** is a back wall **114** of the urinal **102**. In one embodiment, the back wall **114** may include a height of approximately 17.0-22.0 inches in length and a width that is approximately 9.0-14.0 inches in length. In other embodiments, the urinal **102** may include a length and a width that is outside of this range.

FIG. **1** depicts the anti-splash body **104** having a first portion **108**, a second portion **110** opposite the first portion **108**, and a length **112**, i.e., a longitudinal length, extending from the first portion **108** to the second portion **110**. In one embodiment, the length **112** permits the anti-splash body **104** to cover a substantial portion of the back wall **114** of the urinal **102** to prevent urine from splashing on a user when the urine strikes the anti-splash body **104**. The term "substantial portion" is defined herein as covering at least 40%-50% of the back wall **114** of the urinal **102**. In other embodiments, the length **112** covers less than the substantial portion of the back wall **114** of the urinal **102**.

In one embodiment, the anti-splash body **104** includes an elongated shape of a flexible material configured to couple to the urinal **102**. The term "elongated" is defined herein as having a length that is at least twice as long as a width. In other embodiments, the length may be less than twice as long as the width. For example, in one embodiment the length **112** is approximately 17.0-20.0 inches. In this embodiment, the anti-splash body may include a width **116** that is approximately 5.0-8.0 inches. In another embodiment, the length **112** may be approximately 13.0-16.0 inches and the width **116** may be approximately 3.0-6.0. In other embodiments, the length **112** and the width **116** may be outside of these ranges.

FIG. **1** depicts the elongated shape of the anti-splash body **104** being a rectangular-like shape. The term "rectangular-like" is defined herein as having at least one pair of opposing parallel sides of equal length. The term "rectangular-like" may encompass round or curved edges. In other embodiments, the anti-splash body **104** may be rectangular, square, round, oval, or another shape conducive for coupling to the back wall **114** of a urinal **102**.

In one embodiment, the anti-splash body **104** may be made of a material that is flexible and tough, such as DuPoint Elvax®250, PVC plastic, or the like. In other embodiments, the anti-splash body **104** may be composed of a composite material, a metallic material, or another material conducive for placement within a urinal. The material may or may not have elastically deformable properties (e.g., the ability to change its shape and return back to its static-state shape after its change in shape). In one advantageous embodiment, the material is a buoyant material that provides a base **106** that will rise above the water line where water remains in the urinal after flushing, thereby decreasing the risk of the urinal drain being blocked by the anti-splash device **100**. In other embodiments, the material may be a non-buoyant material.

In one embodiment, the urine is prevented from splashing onto the user when striking the anti-splash body **104** at least partly due to a first plurality of protrusions **118** being coupled to an front surface **120** of the anti-splash body **104**. The term "protrusion" is defined herein as a part that extends away from the front surface **120** and may include bristles, a wave pattern, one or more shapes, e.g., squares, or another configuration designed to prevent urine from splashing onto a user when using the anti-splash device **100**. In use, such as when a urine stream strikes the protrusions **118**, the urine may be broken apart by the protrusions **118**. Said another way, the anti-splash device **100** may not rely on a capillary

action to reduce or prevent urine from splashing from the anti-splash device **100** onto a user.

Advantageously, the protrusions **118** define a plurality of protrusion voids **122** which permit the urine to effectively flow in a downward direction along the front surface **120** toward the lower portion **124** of the urinal **102** which houses the urinal drain. In one embodiment, such as when the device **100** is disposed in a vertical direction with respect to the back wall **114** of the urinal **102**, gravity may assist in causing the urine to effectively flow in the downward direction toward the lower portion **124** of the urinal **102**. The protrusion voids **122** may also provide space for the protrusions **118** to bend and deflect when struck by the urine.

In order to effectively mount the anti-splash body **104** to the back wall **114**, the anti-splash body **104** includes at least one fastener **126** sized and shaped to orient the anti-splash body **104** in the vertical direction parallel to a vertical direction of the back wall **114**. FIG. **1** depicts the anti-splash body **104** mounted to the back wall **114** using a first suction cup coupled to the fastener **126** and a second suction cup coupled to a second fastener **128**. The fasteners **126**, **128** are depicted as apertures defined by the anti-splash body **104**. In other embodiments, the fasteners **126**, **128** may be adhesive, e.g., tape, hooks, or another type of fastener configured to mount the anti-splash body **104** in a stationary position relative to the back wall **114**.

With reference now to FIG. **2**, the base **106** is depicted as being coupled to the first portion **108** of the anti-splash body **104**. Generally speaking, the first portion **108** includes the region extending approximately from a first end **200** to a midpoint along the length **112**. In the same vein, the second portion **110** includes the region extending approximately from a second end **202** to the midpoint along the length **112**. The midpoint is generally defined as being disposed approximately halfway between the first end **200** and the second end **202**.

With brief reference to FIG. **2**, in conjunction with FIG. **3**, in one advantageous embodiment, in order to effectively separate, e.g., removably couple, the anti-splash body **104** from the base **106** (FIG. **3**), the first end **200** includes a perforated coupling region **204** disposed between the first portion **108** and the base **106**. More specifically, the perforated coupling region **204** extends from the first portion **108** to the base **106** and includes a perforated edge **206** that facilitates in the ability to simply tear, split, or otherwise separate the first portion **108** of the anti-splash body **104** from the base **106** along the perforated edge **206**. The term "perforated" is defined herein as visibly displaying a hole, perforation, puncture, or other visible marking such that the user is provided with a visual indication of where the anti-splash body **104** may be uncoupled, i.e., separated, from the base **106**. Said another way, the anti-splash body **104** may be removably coupled from the base **106**. Advantageously, the perforated coupling region **204** not only allows the user to remove the base **106** from urinals with raised drainage points, but it also provides the user with the ability to independently move and position the anti-splash body **104** and the base **106** relative to select locations on a urinal.

In one embodiment, the perforated coupling region **204** is configured to translate the base **106** from a first position in which the base **106** is oriented in a direction parallel to the anti-splash body **104** (FIG. **2**) to a second position including the base **106** being oriented in a direction substantially perpendicular from the first portion **108** of the anti-splash body **104** (FIG. **3**). The term "substantially perpendicular" is defined herein as being disposed at an approximate 90 orientation (+/−15-20°) with respect to the first portion **108**. The base **106** may be translated from the first position to the second position when coupled to the anti-splash body **104** or alternatively, when separated from the anti-splash body **104**.

With reference again to FIG. **1**, the substantially perpendicular orientation of the base **106** enables the user to bend the urinal anti-splash device **100** in accordance with the dimensions of the urinal. In the same vein, this embodiment provides the urinal anti-splash device **100** that covers the urinal's back wall **114** and lower portion **124**, thereby reducing or preventing urine from splashing on the user when either or both the back wall **114** and the lower portion **124** are struck by a stream of urine. As an added advantage, the urinal anti-splash device **100** may be made from a single mold, effectively reducing the costs associated with making the urinal anti-splash device **100** in comparison to other existing urinal accessories that may require the manufacturing of separate components. In other embodiments, the anti-splash device **100**, e.g., the anti-splash body **104** and the base **106**, may be manufactured as separate components.

With reference now to FIG. **3**, a second plurality of protrusions **300** can be seen extending outwardly from the base **106**. The second plurality of protrusions **300** are configured to extend in the direction substantially perpendicular from the first portion **108** of the anti-splash body **104**. This configuration advantageously prevents urine from splashing onto the user when striking the base **106**. Similar to the protrusions **118** described above, in use, such as when a urine stream strikes the protrusions **300**, the urine may be broken apart by the protrusions **300**. Advantageously, the protrusions **300** define a plurality of protrusion voids **302** which permit the urine to effectively flow in the downward direction toward the urinal drain. In order to effectively allow the urine to flow into the urinal drain, the base **106** is depicted as defining a plurality of apertures **304** which define a urine flow path from the base **106** to the urinal drain. The protrusion voids **302** may also give space for the protrusions **300** to bend and deflect when struck by the urine.

With reference now to FIG. **4**, in order to prevent urine from bouncing off of the urinal drain screen in a direction toward the user, the base **106** is sized and shaped to cover at least a portion of the surface area of a urinal drain screen. In one embodiment, the portion may be at least 30% of the surface area of the urinal drain screen. In other embodiments, the base **106** may cover less than the 30% of the surface area of the urinal drain screen. In one non-limiting embodiment the base **106** includes a diameter **400** that is approximately 5.0-7.0 inches in length. In others embodiments, the diameter **400** may be outside of this range.

FIG. **4** depicts the shape of the base **106** as being a circular-like shape, i.e., different than the shape of the anti-splash body **104**. The term "circular-like" is defined herein as having at least two round edges. The circular-like shape is conducive for covering the urinal drain which is commonly a circular shape. In other embodiments, the shape of the base **106** and the shape of the anti-splash body **104** may be the same, e.g., rectangular, circular, square, round, oval, or another shape conducive for fitting within the urinal.

With reference now to FIG. **5**, an elevational side view of the urinal anti-splash device **100** is shown. More specifically, the first portion **108** is depicted having an angled region **500** to facilitate water and/or urine flow along the front surface **120** in a direction toward the urinal drain. Additionally, the protrusions **118**, **300** are depicted as having a variable length which may also increase the facilitation of water and/or urine flow along the front surface **120** toward the urinal drain. In other embodiments, the protrusions **118** and/or the protrusions **300** may have a uniform length. In

one embodiment, the protrusions **118** include a protrusion length **502** that is between approximately 0.25 to 1.0 inch. In other embodiments, the protrusion length **502** may be outside of this range. In the same vein, in one embodiment, the protrusions **300** include a protrusion length **504** that is the same as the protrusion length **502**. In other embodiments, the protrusion length **504** may be outside of this range, e.g., between approximately 0.50 to 1.5 inches.

The protrusions **118**, **300** can be seen tapering downwardly in a direction toward the front surface **120** of the anti-splash body **104** and the base **106** to further facilitate the water and/or urine flow. Said another way, the protrusions **118**, **300** are wider at the location of the base than at the top. Such configuration causes the protrusions **118**, **300** to break up the urine, while simultaneously allowing the urine to strike the front surface **120** and travel in the downward direction toward the drain when the urinal anti-splash device **100** is disposed in the vertical orientation. The tapering configuration also decreases the complexity associated with the manufacturing process of the device **100** because the protrusions **118**, **300** may be relatively simply removed from the molding during the manufacturing process due to the lack of edges. In another embodiments, either the protrusions **118** or the protrusions **300** may include the tapering configuration. In other embodiments, the protrusions **118**, **300** may be of a uniform width and devoid of the tapering configuration.

In one embodiment, the urinal anti-splash device **100** may include a fragrance embedded within the material of the urinal anti-splash device **100** during the manufacturing process, e.g., during the extrusion or molding phase of the manufacturing process. In another embodiment, the fragrance may be added to the material using a film process. The fragrance may be a volatile substance, such as a fragrant oil, an odor neutralizer, or the like. Such advantageous embodiments eliminate the need for the use of a room deodorizer or urinal cake that may be inconvenient and costly to consistently replace.

With reference now to FIG. **6**, the anti-splash body **104** is depicted as being coupled to and in the substantially perpendicular orientation relative to the base **106**. In one embodiment, the anti-splash body **104** and/or the base **106** made be made with a thermochromic material **600**. More specifically, a layer of thermochromic dye may be added to the front surface **120** of the anti-splash body **104**. In a preferred embodiment, the layer of thermochromic dye may be added to the front surface **120** of the anti-splash body **104** and the base **106**. The thermochromic dye may be, without limitation, spirolactone, fluoran, spiropyran, or fulgide, as commonly used by those of ordinary skill in the art. In other embodiments, another type of material may be used to form the thermochromic material **600**.

The thermochromic dye provides the user with the urinal anti-splash device **100** that changes color due to a change in temperature, e.g., that which occurs when urine strikes the thermochromic dye on the urinal anti-splash device **100**. Advantageously, the thermochromic dye is not only aesthetically appealing, but also allows a viewer, such as maintenance personnel, to observe rinse coverage and the flow of water in order to efficiently and effectively clean the anti-splash device **100**. As an added advantage, such configuration also allows businesses to advertise an insignia **602**, e.g., a business name and/or logo, which becomes visible when the anti-splash device **100** changes color during use.

FIG. **7** depicts a perspective rear view of the device **100** showing the anti-splash body **104** having a rear surface **700** that facilitates in the anti-splash body **104** being flush with the back wall **114** of the urinal (FIG. **1**). In one embodiment, the rear surface **700** is substantially level with the back wall **114** of the urinal. The term "substantially level" is defined herein as having a relatively flat surface with minimal sloping. In other embodiments, the rear surface **700** may include an uneven rear surface **700**, although the level rear surface **700** is preferred.

To effectuate the flow of a stream of urine along the urine flow path from the base **106** in a direction toward the urinal drain, FIG. **7** depicts the apertures **304**a-n arranged in a substantially linear configuration. The indicator "a-n" is intended to represent any number of items, with "a" indicating 1 and "n" indicating any number greater than 1. The term "substantially linear" is defined herein as arranged in a nearly straight line allowing nominal deviation. The substantially linear configuration of the apertures **304**a-n forces the stream of urine and/or water to be directed toward the urinal drain. In another embodiments, the apertures **304**a-n may be arranged in another configuration, e.g., in a deviating configuration with respect to each other.

With reference now to the process flow chart of FIG. **8**, in conjunction with FIGS. **1-7**, an exemplary method of mounting a urinal anti-splash device within a urinal is shown. Although FIG. **8** shows a specific order of executing the process steps, the order of executing the steps may be changed relative to the order shown in certain embodiments. Also, two or more blocks shown in succession may be executed concurrently or with partial concurrence in some embodiments. Certain steps may also be omitted in FIG. **8** for the sake of brevity. In some embodiments, some or all of the process steps included in FIG. **8** can be combined into a single process.

In said process, the method begins as step **800** and immediately proceeds to step **802** of providing a urinal anti-splash device, such as the urinal anti-splash device **100** described above. More specifically, in one embodiment, the urinal anti-splash device **100** includes the anti-splash body **104** coupled to the base **106**. As discussed above, the anti-splash body **104** may also include the first plurality of protrusions **118** extending outwardly from the front surface **120** of the anti-splash body **104** and the second plurality of protrusions **300** extending outwardly from the base **106**. The second plurality of protrusions **300** are configured to extend in the direction substantially perpendicular from the first portion **108** of the anti-splash body **104**.

In step **804**, the process continues with mounting the anti-splash body **104** within a back wall of a urinal. In one embodiment, such mounting may be performed using suctions cups coupled to at least one fastener disposed on the urinal anti-splash device **100**. In other embodiments, another type of fastener, e.g., adhesive, tape, hooks, etc., may be used to mount the anti-splash body **104** within the urinal.

Next, the process continues to the step of **806** of placing the base **106** over a urinal screen. Advantageously, in one embodiment, the process includes removably coupling, i.e., separating, the base **106** from the anti-splash body **104** such that the components may be independently positioned within the urinal. Such advantageous embodiment provides the urinal anti-splash device **100** that is not only conducive for placement within different size and shape urinals, but also may cover a portion of the surface area of the urinal, to prevent urine from splashing onto a user. The portion of the surface area of the urinal covered by the anti-splash device **100** may depend on the overall size of the urinal and the relative dimensions of the urinal anti-splash device **100**.

In another embodiment, the process may include bending the urinal anti-splash device **100** at a location of a perforated coupling region disposed between the first portion **108** of the anti-splash body **104** and the base **106**, as discussed above. The perforated coupling region is configured to translate the base **106** from a first position parallel to the anti-splash body **104** to a second position including the base **106** being in the direction substantially perpendicular from the first portion **108** of the anti-splash body **104**. In such configuration the base **106** may remain coupled to the anti-splash body **104**, or alternatively, may be detached from the anti-splash body **104**. The process then terminates at step **808**.

A urinal anti-splash device has been disclosed that not only includes an anti-splash body and a base that may be separated from each other to cover a back wall and a urinal screen to prevent urine from splashing onto a user of the urinal, but also provides an front surface conducive for allowing the urine and/or water to flow in a downward direction toward the urinal drain.

What is claimed is:

1. A urinal anti-splash device, comprising:

an anti-splash body configured to be mounted vertically on a back wall of a urinal and having a plurality of protrusions that extend from a front surface of the anti-splash body;

a base attached to the anti-splash body at a coupling region formed between the base and the anti-splash body, the base being configured to cover at least a portion of a urinal drain and having a plurality of protrusions extending away from the base on a surface of the base that is contiguous with the front surface of the anti-splash body;

the coupling region is configured allow the base to move between a first position including the base oriented in a direction parallel to the anti-splash body and a second position including the base oriented in a direction substantially perpendicular from the base.

2. The urinal anti-splash device according to claim **1**, wherein the anti-splash body is of a shape different than a shape of the base.

3. The urinal anti-splash device according to claim **1**, wherein the base is removably coupled to the anti-splash body at the coupling region.

4. The urinal anti-splash device according to claim **3**, wherein the coupling region includes perforations between the base and the anti-splash body.

5. The urinal anti-splash device according to claim **1**, wherein the plurality of protrusions taper downwardly in a direction toward an front surface of the anti-splash body and the base.

6. The urinal anti-splash device according to claim **1**, wherein the plurality of protrusions on the anti-splash body substantially span a longitudinal length of the anti-splash body and define a plurality of protrusion voids between the protrusions of the plurality of protrusions.

7. The urinal anti-splash device according to claim **1**, wherein the anti-splash body includes a thermochromic material.

8. A urinal anti-splash device comprising:

an anti-splash body configured to be mounted on a back wall of a urinal, the anti-splash body including a plurality of protrusions extending from a front surface of the anti-splash body, wherein at least some of the protrusions have a base at the front surface of the anti-splash body that is wider than a top of the protrusion at the opposite end of the protrusion; and

a base that is attached to the anti-splash body and which is configured to extend in a direction substantially perpendicular from the anti-splash body to at least partially cover a drain of a urinal, and which further includes a plurality of protrusions extending outwardly from the base which are arranged to extend in a direction substantially perpendicular to plurality of protrusions of the anti-splash body.

9. The urinal anti-splash device according to claim **8**, wherein the base is of a shape different than a shape of the anti-splash body.

10. The urinal anti-splash device according to claim **8**, wherein the anti-splash body includes an elongated shape of a flexible material.

11. The urinal anti-splash device according to claim **8**, further comprising at least one fastener that is sized and shaped to orient the anti-splash body in a vertical direction parallel to a vertical direction of a urinal wall.

12. The urinal anti-splash device according to claim **8**, wherein the base is removably coupled to the first portion by a row of perforations between the base and the anti-splash body.

13. The urinal anti-splash device according to claim **8**, further comprising:

a perforated coupling region disposed between the anti-splash body and the base, the perforated coupling region configured to allow the base move from a first position parallel to the anti-splash body to a second position including the base being in the direction substantially perpendicular from the first portion of the anti-splash body.

14. The urinal anti-splash device according to claim **8**, wherein the base is made of buoyant material.

15. The urinal anti-splash device according to claim **8**, wherein the anti-splash body is a rectangular-like shape, and the base is a circular-like shape.

16. The urinal anti-splash device according to claim **8**, wherein the plurality of protrusions on the anti-splash body are of a variable length.

17. The urinal anti-splash device according to claim **8**, further comprising an angled surface at a top of the anti-splash body that is configured to direct a flow of water from the back wall of the urinal over the front surface of the anti-splash body when the anti-splash device is mounted in the urinal.

18. A method of mounting a urinal anti-splash device within a urinal comprising:

providing a urinal anti-splash device including:

an anti-splash body configured to be mounted on a back wall of a urinal, the anti-splash body including a plurality of protrusions extending from a front surface of the anti-splash body, wherein at least some of the protrusions have a base at the front surface of the anti-splash body that is wider than a top of the protrusion at the opposite end of the protrusion;

a base that is attached to the anti-splash body and which is configured to extend in a direction substantially perpendicular from the first portion to cover a drain of a urinal, and which further includes a plurality of protrusions extending outwardly from the base, the second plurality of protrusions are arranged to extend in a direction substantially perpendicular from plurality of protrusions of the anti-splash body;

mounting the anti-splash body on the back wall of a urinal; and

placing the base over a urinal drain.

19. The method of mounting a urinal anti-splash device within a urinal according to claim **18**, further comprising providing the urinal anti-splash device with the base being removably coupled to the anti-splash body.

20. The method of mounting a urinal anti-splash device within a urinal according to claim **18**, further comprising bending the urinal anti-splash device at a perforated coupling region disposed between the anti-splash body and the base, the perforated coupling region configured to allow the base to move relative to the anti-splash body, including to move from a first position parallel to the anti-splash body to a second position substantially perpendicular from the anti-splash body.

* * * * *

Exhibit 5

6400 N. Andrews Avenue, Suite 500
Fort Lauderdale, Florida 33309
Tel: (754) 300-1500 www.ConceptLaw.com
Fax: (754) 300-1501 ABrown@ConceptLaw.com

***VIA* FEDEX AND EMAIL**

October 26, 2023

Mr. Doug Brown, President
Fresh Products LLC
30600 Oregon Road
Perrysburg, OH 43551
Email: freshhr@freshproducts.com

Re: PATENT INFRINGEMENT OF U.S. PATENT NOS. 10,036,154 AND 10,294,649

Dear Mr. Brown,

This law firm represents Sanastar, Inc., d/b/a WizKid Products, ("Sanastar") with respect to certain intellectual property matters. As you are undoubtedly aware, Sanastar provides patented goods in the sanitation and custodial industries, which helped Sanastar gain worldwide notoriety and success. Specifically, Sanastar owns U.S. Patent Nos. 10,036,154 ("the '154 Patent") and 10,294,649 ("the '649 Patent"), which is a continuation of the '154 Patent, for "URINAL ANTI-SPLASH DEVICE[S]". A true and correct copy of the '154 and the '649 Patents are enclosed as **Exhibits A** and **B**, respectively. Sanastar considers its technology to be among its most valuable assets and is committed to protecting its rights with vigor.

Under the United States Patent Act, infringement occurs when one makes, uses, sells, offers for sale, or imports into the United States a patented invention without authorization from the patent owner. *See* 35 U.S.C. § 271 *et seq.* To this end, it recently came to Sanastar's attention that Fresh Products, LLC ("Fresh Products") is making, offering to sell, and/or selling urinal anti-splash devices which practice and infringe at least one independent claim of the '154 and '649 Patents.

In connection with this discovery, Sanastar reviewed Fresh Products' "Tsunami" anti-splash device ("Accused Product") — a picture of which is available on Fresh Products' website and herein enclosed as **Exhibit C** — and determined that it incorporates and misappropriates

various aspects of Sanastar's intellectual property, including the subject matter protected by the '154 and '649 Patents. For example, the Accused Product infringes at least independent claim 1 of the '154 Patent and independent claim 1 of the '649 Patent.[1] Claim 1 of said Patents are outlined below for your benefit, and recite:

The '154 Patent

1. A urinal anti-splash device comprising:

an anti-splash body sized and shaped to couple to at least a portion of a urinal, the anti-splash body including:

a first portion;

a second portion opposite the first portion;

a length extending from the first portion to the second portion; and

an upper surface extending the length;

a base couplable to the first portion and configured to extend in a direction substantially perpendicular from the first portion;

a first plurality of protrusions extending outwardly from the upper surface of the anti-splash body and which taper downwardly in a direction toward the upper surface of the anti-splash body; and

a second plurality of protrusions extending outwardly from the base, the second plurality of protrusions configured to extend in the direction substantially perpendicular from the first portion of the anti-splash body.

The '649 Patent

1. A urinal anti-splash device, comprising:

an anti-splash body configured to be mounted vertically on a back wall of a urinal and having a plurality of protrusions that extend from a front surface of the anti-splash body;

a base attached to the anti-splash body at a coupling region formed between the base and the anti-splash body, the base being configured to cover at least a portion of a urinal drain and having a plurality of protrusions extending away from the base on a surface of the base that is contiguous with the front surface of the anti-splash body;

[1] It is possible Fresh Products' Tsunami infringes other claims of the '154 and '649 Patents, as well as claims of other patents owned by Sanastar. Those claims are not included in this letter simply because Sanastar believes Fresh Products' infringement of claim 1 of the cited Patents is clear; but all other claims are specifically reserved and preserved.

the coupling region is configured allow the base to move between a first position including the base oriented in a direction parallel to the anti-splash body and a second position including the base oriented in a direction substantially perpendicular from the base.

The Accused Product, and all those functionally equivalent to the Accused Product, are believed to literally infringe the ’154 and ’649 Patents as described and depicted in the enclosed exemplary claim chart (“Claim Chart”), attached as **Exhibit D**.

Based on this analysis, it is clear to Sanastar that Fresh Products infringes the ‘154 and ‘649 Patents. As such, Sanastar hereby demands Fresh Products immediately cease all sales, offers to sell, manufacture, and/or use of the Accused Product (and all those functionally equivalent as described above), and immediately desist from resumption of such activity. Further, Sanastar demands Fresh Products:

(a) immediately advise all of its employees and/or agents involved in the manufacture and/or use of the Accused Products to cease their conduct forthwith;

(b) produce to us all inventory of the Accused Products in Fresh Products' possession, custody, or control;

(c) provide an accounting of all sales of each of the Accused Products sold by Fresh Products to date;

(d) provide an accounting of all units of each of the Accused Products manufactured by Fresh Products to date;

(e) disclose the names, addresses, and telephone numbers of all persons associated with the manufacturer, distribution, use, and/or sales of the Accused Products; and

(f) maintain continuing custody of all original books, records, and other documents related to the foregoing demands.

Failure to comply with the aforementioned demands will serve to increase Fresh Products’ liability exposure to Sanastar and may subject Fresh Products to enhanced damages and payment of Sanastar’ attorneys’ fees related to any enforcement of its rights against Fresh Products in court, should such become necessary. That said, we are hopeful that we can work together to avoid the need for potential judicial intervention and look forward to hearing from you to discuss methods of assuring your compliance.

We trust that you appreciate the importance of this matter and, as such, request that you respond in writing, by November 8, 2023, assuring us of your immediate actions taken to comply with the demands of this letter. Should you have any questions concerning the notices and demands

set forth herein, you may contact me at the telephone number or email address provided in the header of this correspondence.

Nothing contained herein or omitted here from constitutes a waiver of any of the rights or remedies at law or in equity of Sanastar, all of which are hereby expressly reserved.

PLEASE CONDUCT YOURSELVES ACCORDINGLY.

Sincerely,

ALEXANDER BROWN, ESQ.
For the Firm

EXHIBIT A

US010036154B2

(12) **United States Patent**
Crevier

(10) **Patent No.: US 10,036,154 B2**
(45) **Date of Patent: Jul. 31, 2018**

(54) **URINAL ANTI-SPLASH DEVICE**

(71) Applicant: **Jeffrey Scott Crevier**, Fort Lauderdale, FL (US)

(72) Inventor: **Jeffrey Scott Crevier**, Fort Lauderdale, FL (US)

(*) Notice: Subject to any disclaimer, the term of this patent is extended or adjusted under 35 U.S.C. 154(b) by 0 days.

(21) Appl. No.: **15/342,543**

(22) Filed: **Nov. 3, 2016**

(65) **Prior Publication Data**

US 2018/0119403 A1 May 3, 2018

(51) **Int. Cl.**
E03D 9/00 (2006.01)
E03D 13/00 (2006.01)

(52) **U.S. Cl.**
CPC ***E03D 13/005*** (2013.01)

(58) **Field of Classification Search**
CPC E03D 9/00
USPC 4/300.3
See application file for complete search history.

(56) **References Cited**

U.S. PATENT DOCUMENTS

4,671,976	A *	6/1987	Vidal	A47K 1/14 4/286
4,866,793	A *	9/1989	Luedtke	E03D 9/00 4/300.3
D329,893	S *	9/1992	Luedtke	E03D 9/00 D23/310
5,313,672	A *	5/1994	Luedtke	E03D 9/00 4/144.1
5,398,347	A *	3/1995	Luedtke	E03D 9/00 4/300.3
D393,896	S *	4/1998	Wagner	E03D 9/00 D23/261
5,774,905	A *	7/1998	Wager	E03D 13/00 4/222.1
5,809,590	A *	9/1998	Williams	A47K 11/12 4/300.3
D427,295	S *	6/2000	Wagner	A47K 11/12 D23/307
6,550,075	B1 *	4/2003	Brannon	A47K 13/24 4/300.3
D639,410	S *	6/2011	Ramirez	A47K 17/00 D23/310
8,043,498	B2 *	10/2011	Rueda	E03F 1/00 210/164
8,056,153	B2 *	11/2011	Ruedas	E03D 13/00 4/222

(Continued)

Primary Examiner — Lori Baker
(74) *Attorney, Agent, or Firm* — The Concept Law Group; Scott D. Smiley; Scott M. Garrett

(57) **ABSTRACT**

A urinal anti-splash device including an anti-splash body sized and shaped to couple to at least a portion of a urinal. The anti-splash body may include a first portion, a second portion opposite the first portion, a longitudinal length extending from the first portion to the second portion, and an upper surface extending the longitudinal length. The urinal anti-splash device also includes a base coupled to the first portion and configured to extend in a direction substantially perpendicular from the first portion. The urinal anti-splash device further includes a first plurality of protrusions extending outwardly from the upper surface of the anti-splash body and a second plurality of protrusions extending outwardly from the base, the second plurality of protrusions configured to extend in the direction substantially perpendicular from the first portion of the anti-splash body.

20 Claims, 8 Drawing Sheets

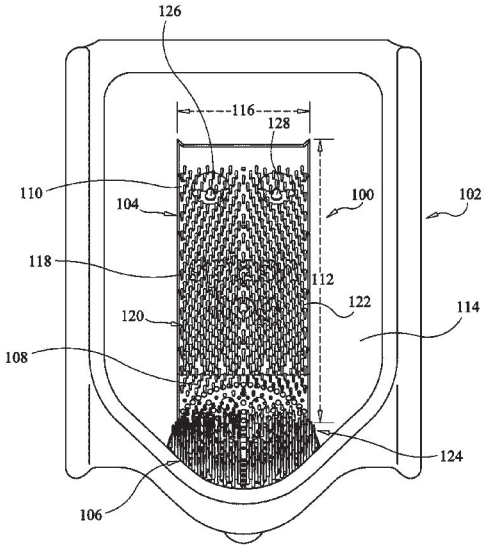

(56) **References Cited**

U.S. PATENT DOCUMENTS

D678,482	S *	3/2013	Williams	E03D 9/00 D23/261
8,856,976	B1 *	10/2014	Niedzielski	E03D 9/00 4/300.3
8,856,977	B2 *	10/2014	Ramirez	E03D 13/00 4/309
D787,031	S *	5/2017	Morgan-Williams	D23/307
2004/0093662	A1 *	5/2004	Zhu	A47K 17/00 4/300.3
2013/0000027	A1 *	1/2013	San Luis	E03D 9/00 4/300.3
2015/0047114	A1 *	2/2015	Ramirez	E03D 13/00 4/300.3
2015/0143624	A1 *	5/2015	Irving	E03D 9/00 4/300.3

* cited by examiner

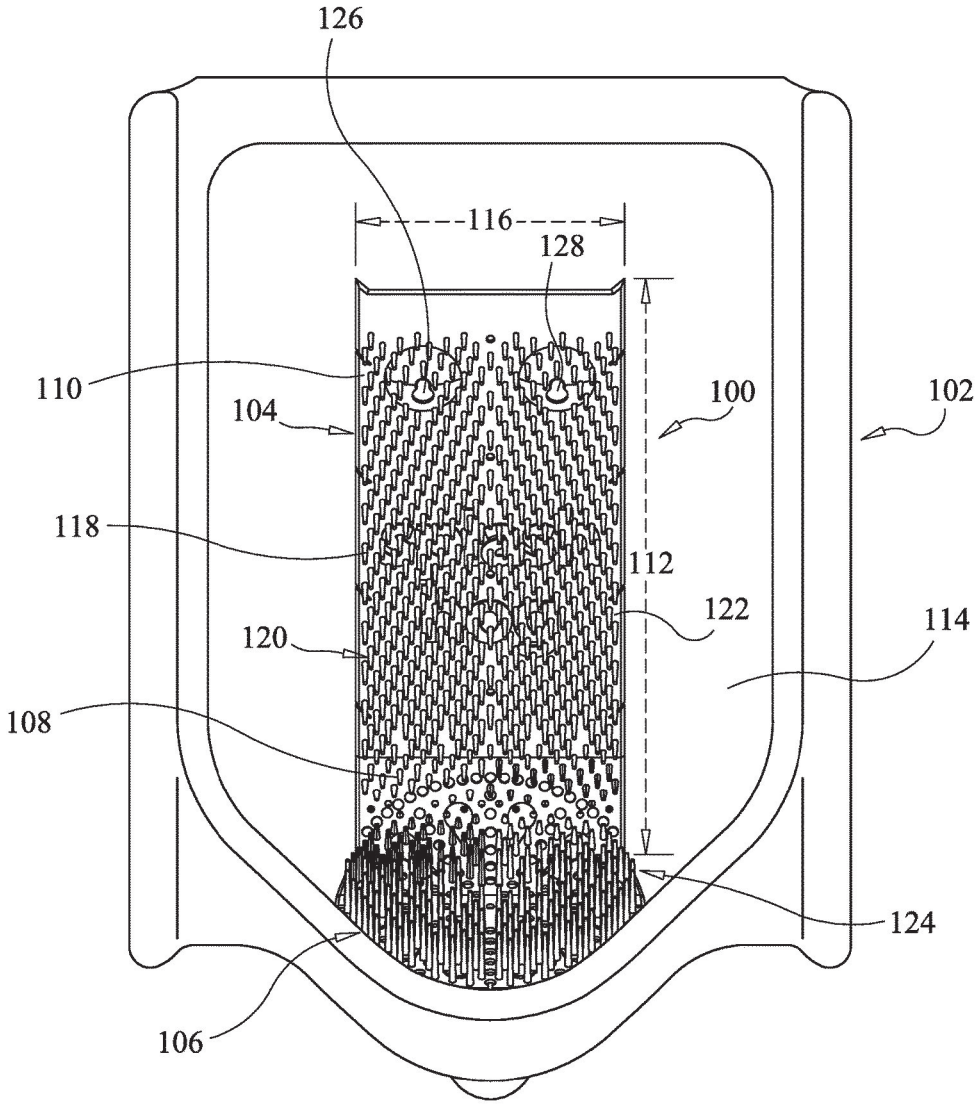

FIG. 1

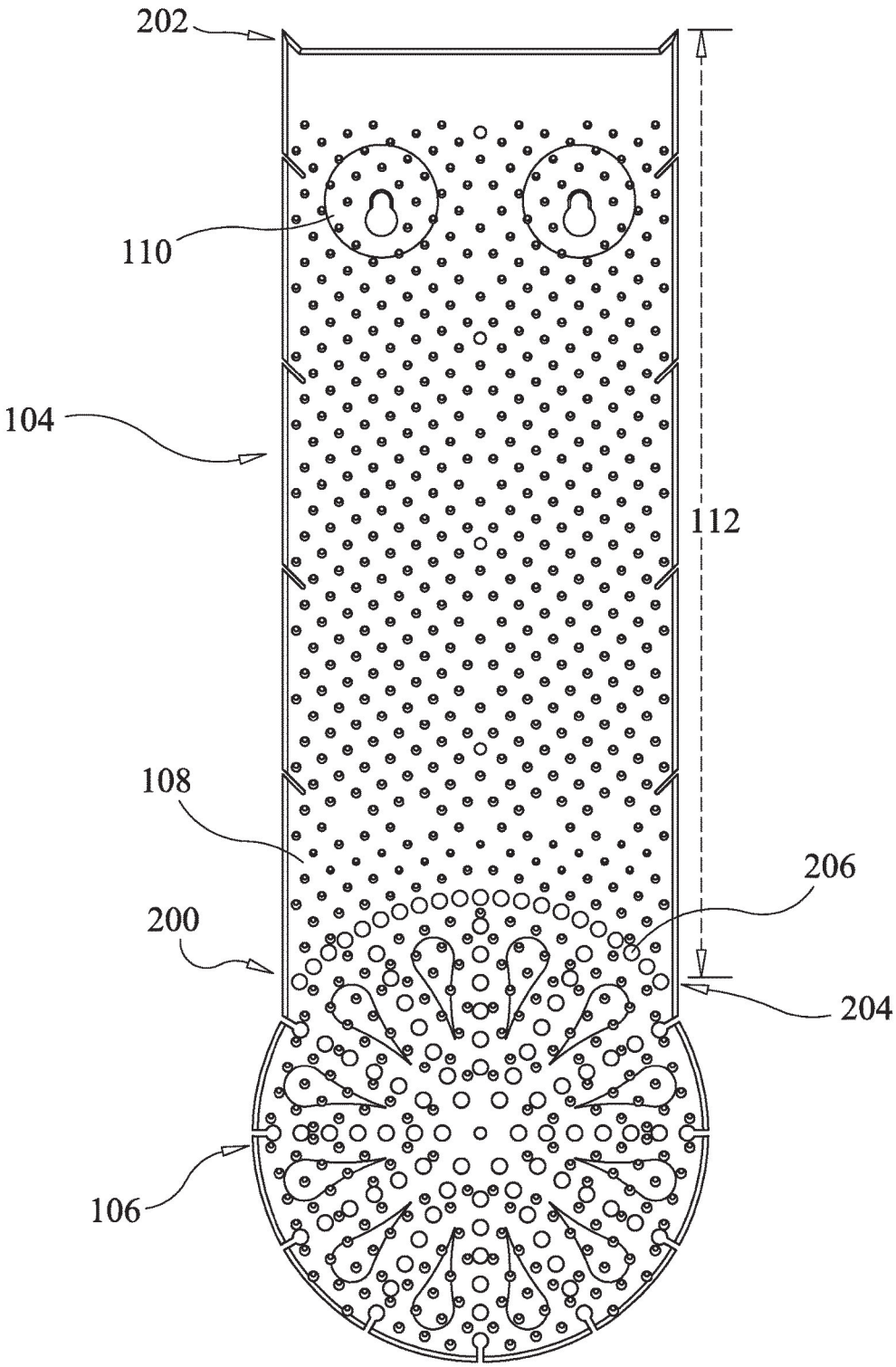

FIG. 2

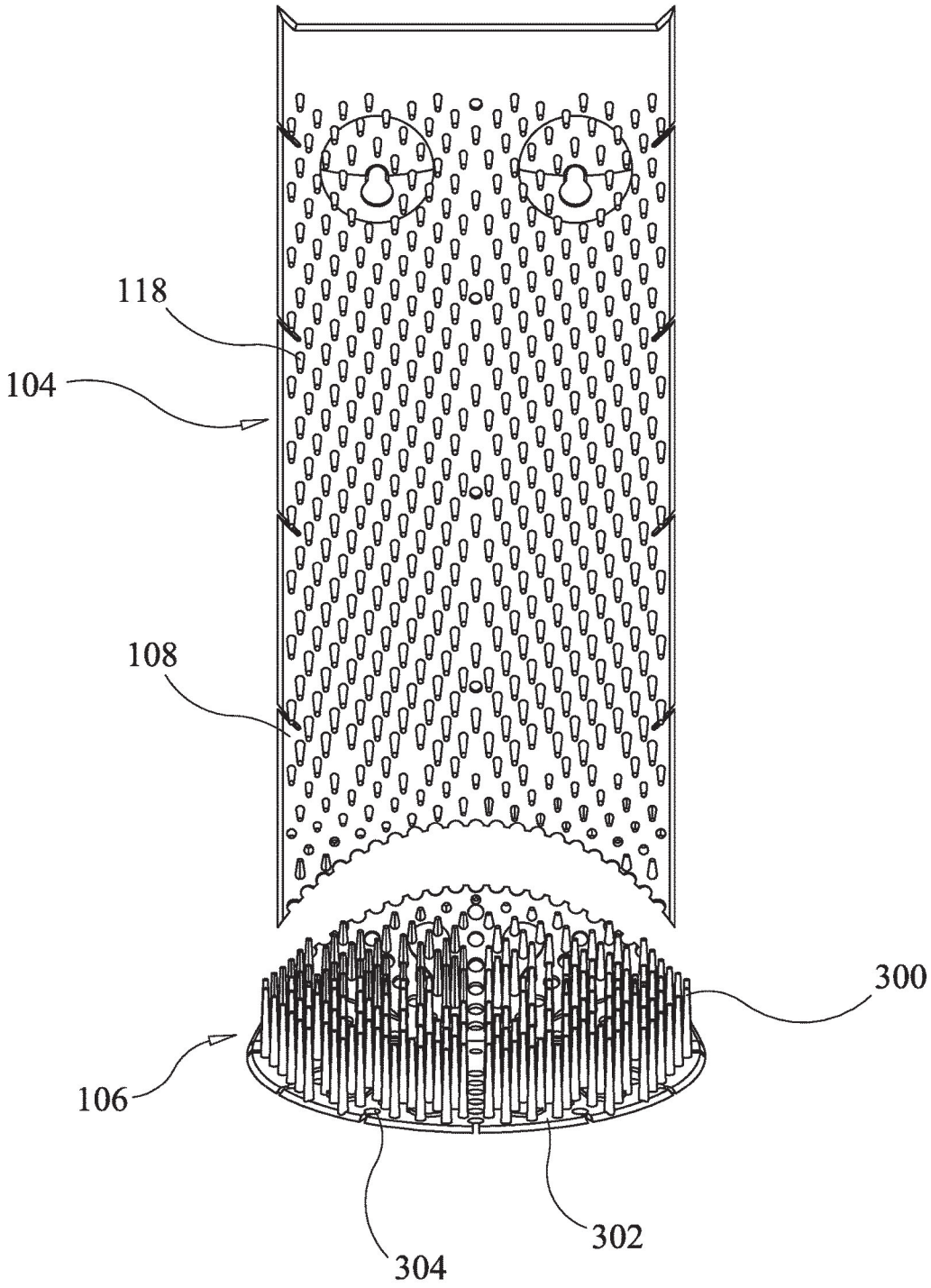

FIG. 3

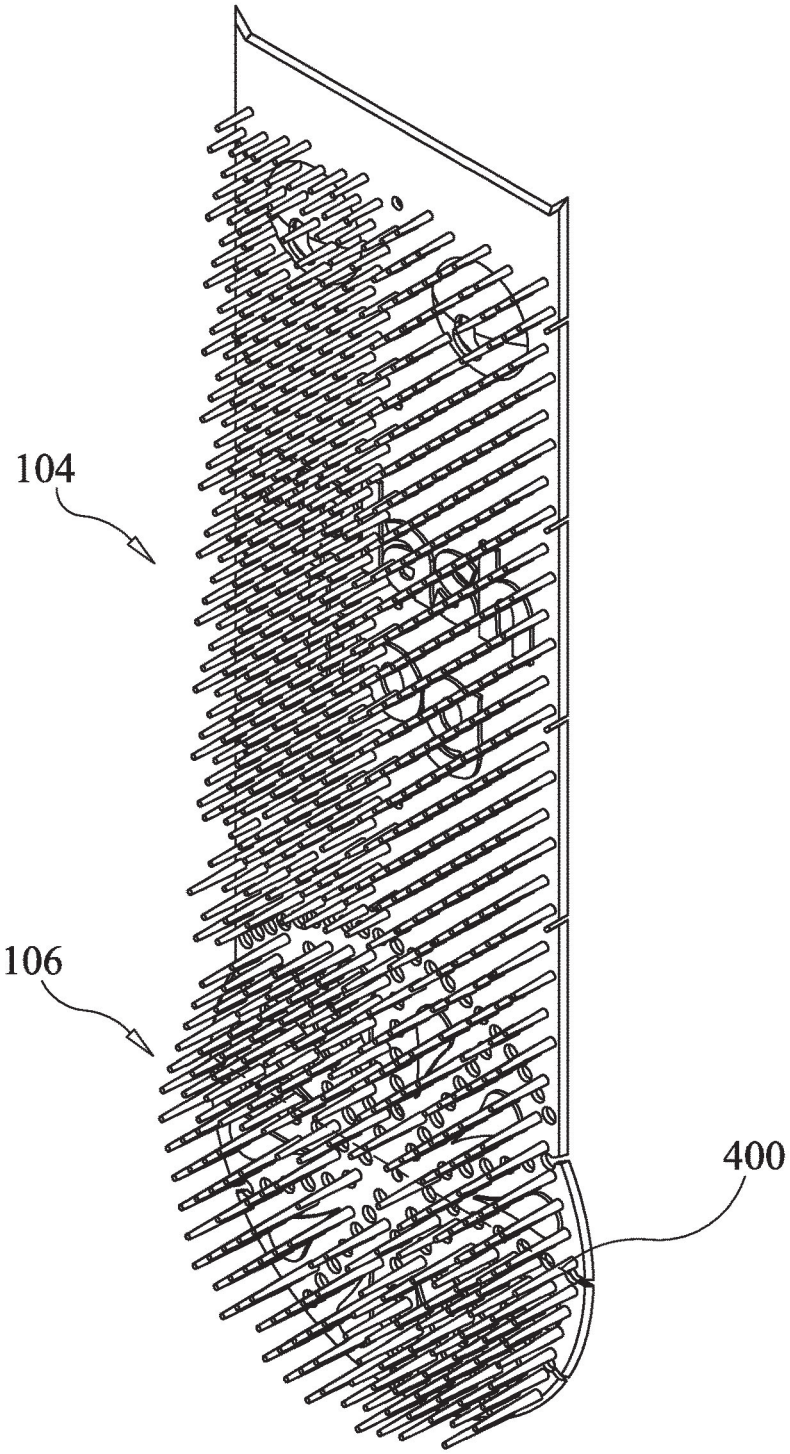

FIG. 4

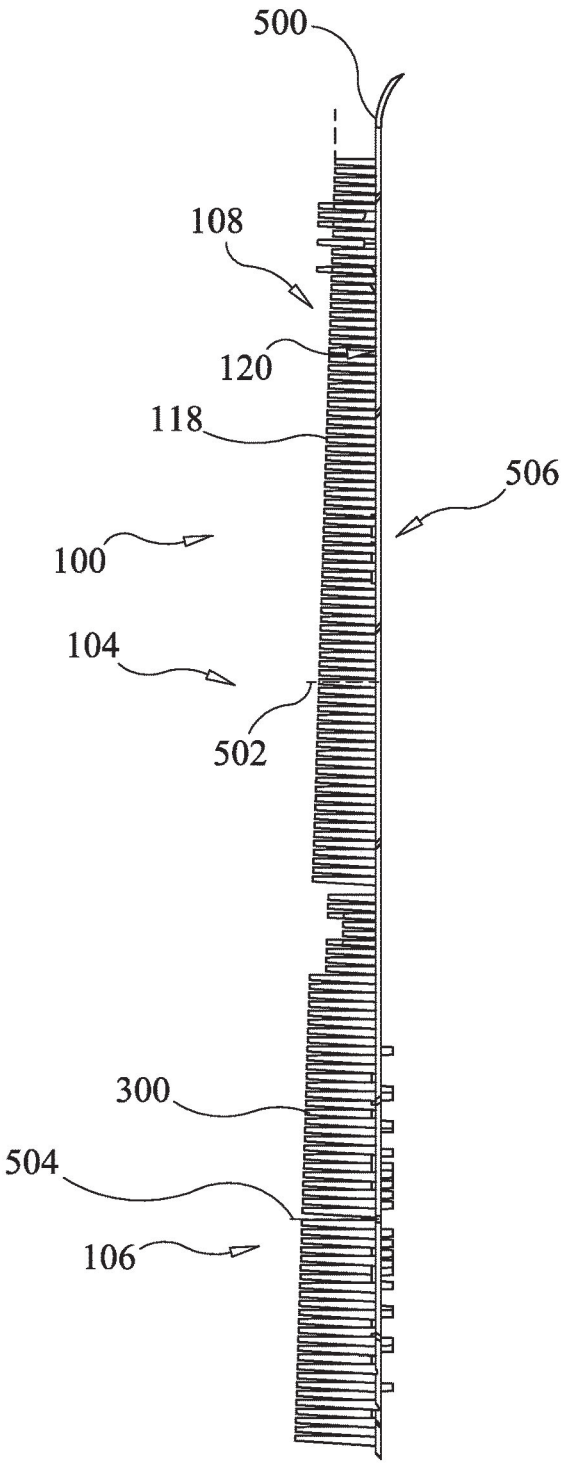

FIG. 5

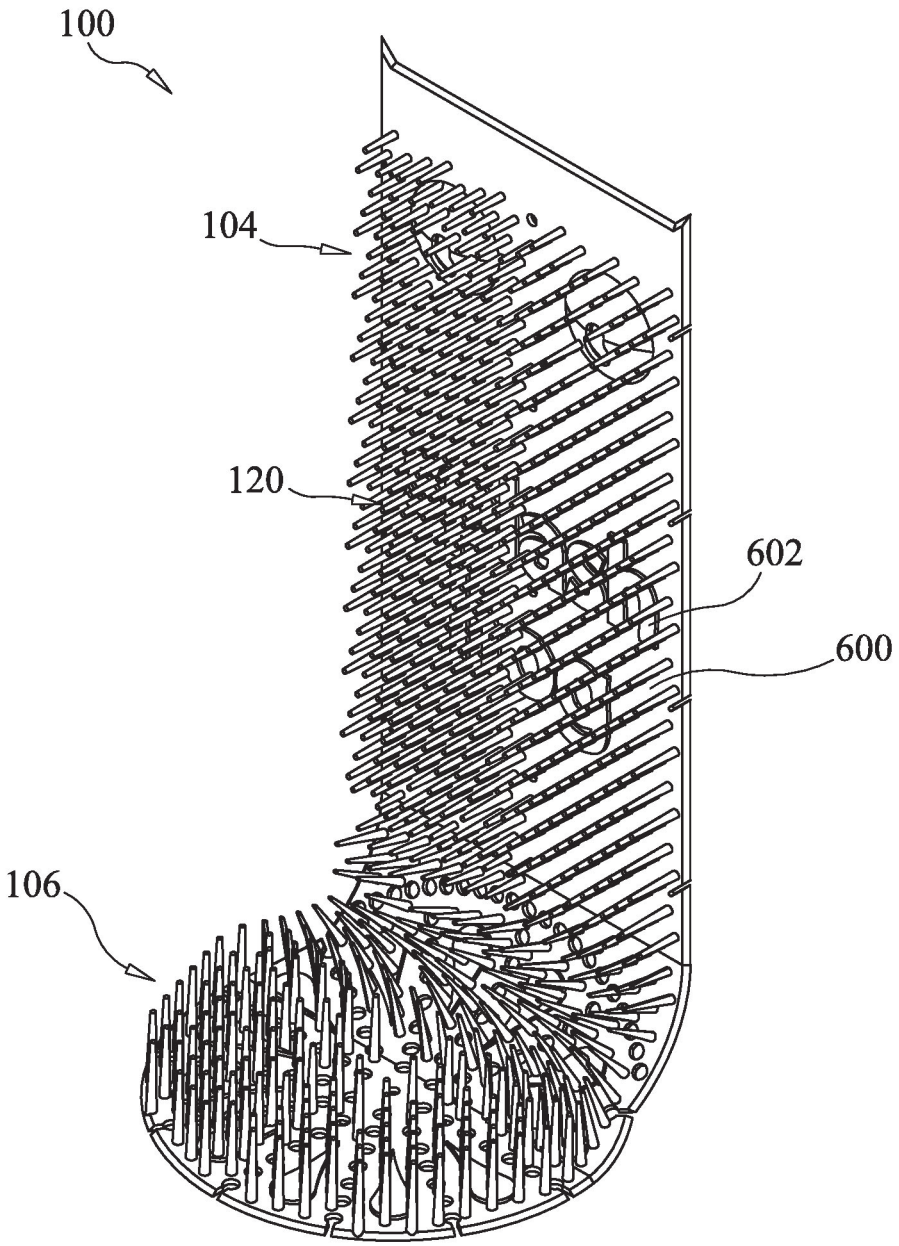

FIG. 6

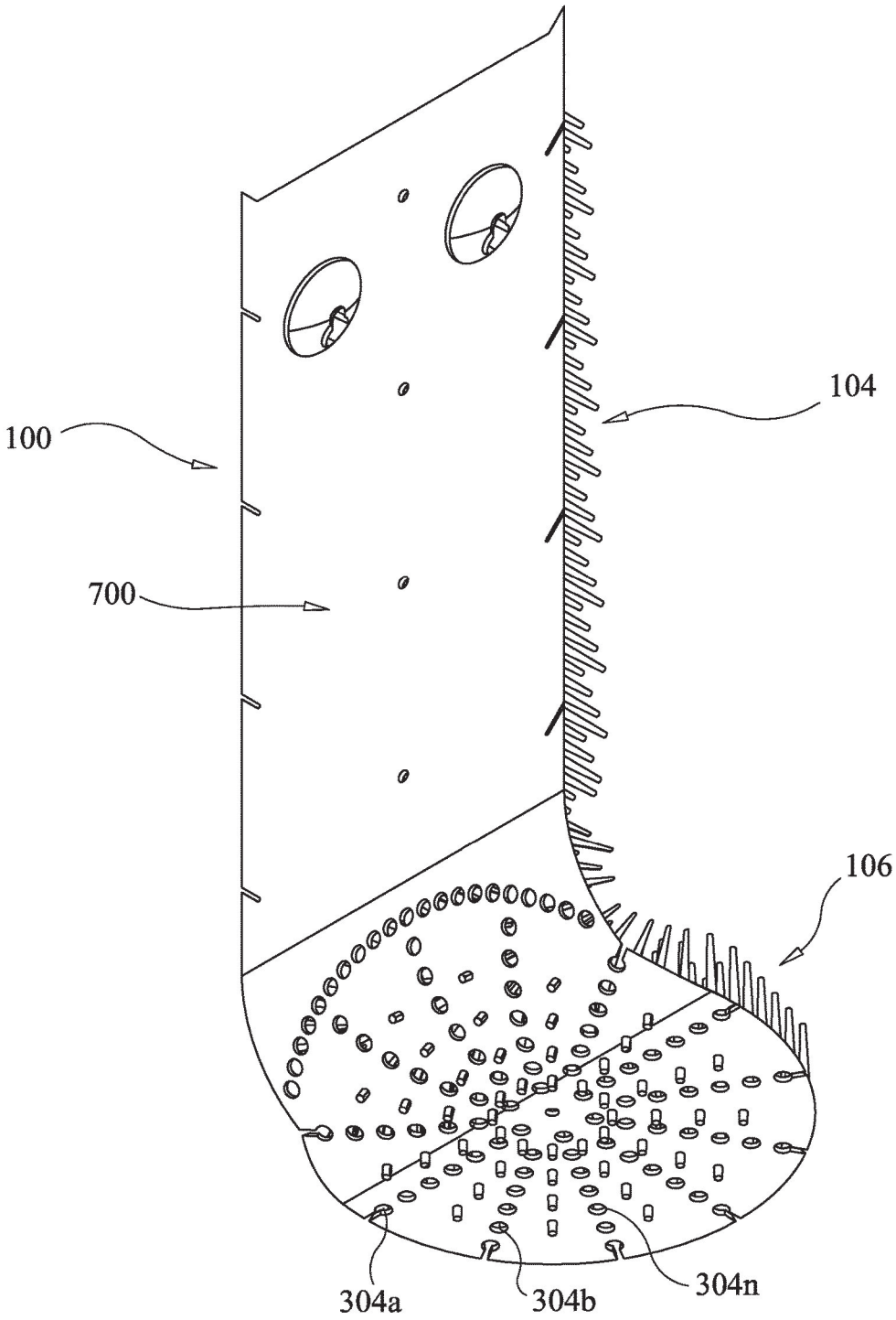

FIG. 7

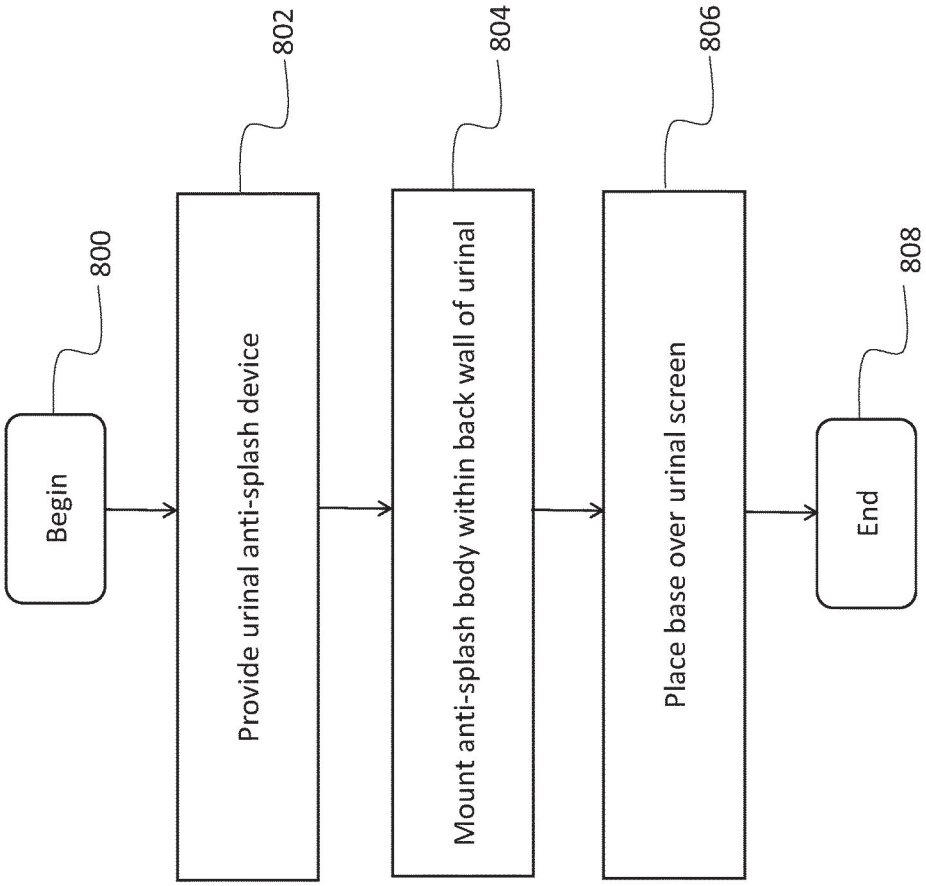
800
Begin
802
Provide urinal anti-splash device
804
Mount anti-splash body within back wall of urinal
806
Place base over urinal screen
808
End

FIG. 8

URINAL ANTI-SPLASH DEVICE

FIELD OF THE INVENTION

The present invention relates generally to urinal accessories, and, more particularly, relates to a urinal anti-splash device for placement within a urinal.

BACKGROUND OF THE INVENTION

A urinal, often installed for efficiency when compared to a general purpose toilet, is a sanitary plumbing fixture commonly located in male restrooms. The use of a urinal, in comparison to a general purpose toilet, is often more convenient for a user due to the absence of additional doors and locks. As an added convenience, urinals do not require a user to turn up a seat prior to use, which is both convenient and generally more sanitary than the toilet. Moreover, urinals occupy less space and consume less water per flush, or possibly no water at all, than a toilet which requires flushing.

Devices designed to be placed within urinals are well-known. For example, urinals found in public restrooms often have a plastic mesh guard to prevent large debris from entering the drain. Unfortunately, such plastic mesh guards fail to reduce or prevent the splashing of urine onto the user. In fact, such plastic mesh guards may actually increase the risk of the user being splashed by the urine as the urine ricochets from the plastic mesh guard. Moreover, these plastic mesh guards do not prevent the splashing of urine that is directed towards the back wall of the urinal.

Other known devices designed to be placed within urinals, often referred to as urinal screens or occasionally as urinal mats, are sized and shaped to cover either the urinal's back wall or the drain. Such urinal screens do not allow the user the option of covering both the back wall and the drain to prevent the urine from splashing onto the user from a maximum surface area of the urinal. Moreover, some urinal screens are made of a rigid material that may fail to conform to the various sizes and shapes of urinals.

Additional known devices designed for placement within a urinal often include protrusions that are densely compacted together, preventing a urine stream from flowing in a vertical direction toward the urinal screen. In this vein, such devices rely on the protrusions to break up the urine stream, leaving urine deposited on the protrusions, resulting in an unpleasant odor and the need for increased cleaning frequency of the device. Moreover, many urinal screens include urinal cakes or deodorizers which require costly and frequent replacement.

Therefore, a need exists to overcome the problems with the prior art as discussed above.

SUMMARY OF THE INVENTION

The invention provides a urinal anti-splash device that overcomes the hereinafore-mentioned disadvantages of the heretofore-known devices and methods of this general type and that provides a urinal anti-splash device sized and shaped to mate with a urinal back wall and a urinal screen to prevent urine from splashing on a user when urine is deposited in the direction of the urinal back wall and/or the urinal screen.

With the foregoing and other objects in view, there is provided, in accordance with the invention, a urinal anti-splash device including an anti-splash body sized and shaped to couple to at least a portion of a urinal, the anti-splash body having a first portion, a second portion opposite the first portion, a length extending from the first portion to the second portion, an upper surface extending the length, a base couplable to the first portion and configured to extend in a direction substantially perpendicular from the first portion, a first plurality of protrusions extending outwardly from the upper surface of the anti-splash body, and a second plurality of protrusions extending outwardly from the base, the second plurality of protrusions configured to extend in the direction substantially perpendicular from the first portion of the anti-splash body.

In accordance with another feature, an embodiment of the present invention includes the base of a shape different than a shape of the anti-splash body.

In accordance with a further feature of the present invention, the anti-splash body includes an elongated shape of a flexible material configured to couple to a back wall of a urinal.

In accordance with a further feature of the present invention, the urinal anti-splash device includes at least one fastener sized and shaped to orient the anti-splash body in a vertical direction parallel to a vertical direction of a urinal wall.

In accordance with yet another feature of the present invention, the base is removably coupled to the first portion.

In accordance with a further feature of the present invention, the urinal anti-splash device includes a perforated coupling region disposed between the first portion of the anti-splash body and the base, the perforated coupling region configured to translate the base from a first position parallel to the anti-splash body to a second position including the base being in the direction substantially perpendicular from the first portion of the anti-splash body.

In accordance with another feature of the present invention, the base is made of buoyant material.

In accordance with a further feature of the present invention, the anti-splash body is a rectangular-like shape and the base is a circular-like shape.

In accordance with another feature of the present invention, the first plurality of protrusions are of a variable length.

In accordance with another feature of the present invention, the first plurality of protrusions taper downwardly in a direction toward the upper surface of the anti-splash body.

In accordance with yet another feature, an embodiment of the present invention includes the urinal anti-splash device having an anti-splash body configured to couple to a urinal wall, the anti-splash body including a first portion, a second portion opposite the first portion, and a longitudinal length separating the first portion from the second portion, a base couplable to the first portion of the anti-splash body, the base sized and shaped to cover at least a portion of a urinal drain, a coupling region configured to translate the base between a first position including the base oriented in a direction parallel to the anti-splash body and a second position including the base oriented in a direction substantially perpendicular from the base, and a plurality of protrusions coupled to the anti-splash body and the base.

In accordance with another feature of the present invention, the anti-splash body is of a shape different than a shape of the base.

In accordance with a further feature of the present invention, the base is removably coupled to the anti-splash body.

In accordance with a further feature of the present invention, the coupling region includes a perforated edge.

In accordance with another feature of the present invention, the plurality of protrusions taper downwardly in a direction toward an upper surface of the anti-splash body and the base.

In accordance with yet another feature of the present invention, the anti-splash body includes a thermochromic material.

In accordance with the present invention, a method for mounting a urinal anti-splash device within a urinal includes providing a urinal anti-splash device having an anti-splash body sized and shaped to couple to at least a portion of a urinal, the anti-splash body including a first portion, a second portion opposite the first portion, a longitudinal length extending from the first portion to the second portion, and an upper surface extending the longitudinal length, a base couplable to the first portion and configured to extend in a direction substantially perpendicular from the first portion, a first plurality of protrusions extending outwardly from the upper surface of the anti-splash body, and a second plurality of protrusions extending outwardly from the base, the second plurality of protrusions configured to extend in the direction substantially perpendicular from the first portion of the anti-splash body, mounting the anti-splash body within a back wall of a urinal, and placing the base over a urinal screen.

In accordance with another feature of the present invention, the method may include removably coupling the anti-splash body from the base.

In accordance with a further feature of the present invention, the method may include bending the urinal anti-splash device at a location of a perforated coupling region disposed between the first portion of the anti-splash body and the base, the perforated coupling region configured to translate the base from a first position parallel to the anti-splash body to a second position including the base being in the direction substantially perpendicular from the first portion of the anti-splash body.

Although the invention is illustrated and described herein as embodied in a urinal anti-splash device, it is, nevertheless, not intended to be limited to the details shown because various modifications and structural changes may be made therein without departing from the spirit of the invention and within the scope and range of equivalents of the claims. Additionally, well-known elements of exemplary embodiments of the invention will not be described in detail or will be omitted so as not to obscure the relevant details of the invention.

Other features that are considered as characteristic for the invention are set forth in the appended claims. As required, detailed embodiments of the present invention are disclosed herein; however, it is to be understood that the disclosed embodiments are merely exemplary of the invention, which can be embodied in various forms. Therefore, specific structural and functional details disclosed herein are not to be interpreted as limiting, but merely as a basis for the claims and as a representative basis for teaching one of ordinary skill in the art to variously employ the present invention in virtually any appropriately detailed structure. Further, the terms and phrases used herein are not intended to be limiting; but rather, to provide an understandable description of the invention. While the specification concludes with claims defining the features of the invention that are regarded as novel, it is believed that the invention will be better understood from a consideration of the following description in conjunction with the drawing figures, in which like reference numerals are carried forward. The figures of the drawings are not drawn to scale.

Before the present invention is disclosed and described, it is to be understood that the terminology used herein is for the purpose of describing particular embodiments only and is not intended to be limiting. The terms "a" or "an," as used herein, are defined as one or more than one. The term "plurality," as used herein, is defined as two or more than two. The term "another," as used herein, is defined as at least a second or more. The terms "including" and/or "having," as used herein, are defined as comprising (i.e., open language). The term "coupled," as used herein, is defined as connected, although not necessarily directly, and not necessarily mechanically. The term "providing" is defined herein in its broadest sense, e.g., bringing/coming into physical existence, making available, and/or supplying to someone or something, in whole or in multiple parts at once or over a period of time.

As used herein, the terms "about" or "approximately" apply to all numeric values, whether or not explicitly indicated. These terms generally refer to a range of numbers that one of skill in the art would consider equivalent to the recited values (i.e., having the same function or result). In many instances these terms may include numbers that are rounded to the nearest significant figure. In this document, the term "longitudinal" should be understood to mean in a direction corresponding to an elongated direction of the body of the urinal anti-splash device in a direction from a ground surface toward a ceiling.

BRIEF DESCRIPTION OF THE DRAWINGS

The accompanying figures, where like reference numerals refer to identical or functionally similar elements throughout the separate views and which together with the detailed description below are incorporated in and form part of the specification, serve to further illustrate various embodiments and explain various principles and advantages all in accordance with the present invention.

FIG. **1** is an elevational front view of a urinal anti-splash device disposed in a urinal in accordance with the present invention;

FIG. **2** is an elevational front view of the urinal anti-splash device of FIG. **1** disposed outside of a urinal and depicting a base disposed in a direction substantially parallel to an anti-splash body in accordance with the present invention;

FIG. **3** is an elevational front view of the urinal anti-splash device of FIG. **1** depicting the base uncoupled from and disposed in a direction substantially perpendicular to the anti-splash body in accordance with the present invention;

FIG. **4** is a perspective view of the urinal anti-splash device of FIG. **1** depicting further features of the base in accordance with the present invention;

FIG. **5** is an elevational side view of the urinal anti-splash device of FIG. **1** depicting a plurality of protrusions of a variable length in accordance with the present invention;

FIG. **6** is a perspective view of the urinal anti-splash device of FIG. **1** depicting the urinal anti-splash device having a thermochromic material added to the urinal anti-splash device in accordance with the present invention;

FIG. **7** is a perspective rear view of the urinal anti-splash device of FIG. **1** depicting the anti-splash body having a substantially level rear surface and the base defining a plurality of apertures; and

FIG. **8** is a process flow diagram depicting a method of mounting a urinal anti-splash device within a urinal in accordance with one embodiment of the present invention.

DETAILED DESCRIPTION

While the specification concludes with claims defining the features of the invention that are regarded as novel, it is believed that the invention will be better understood from a

consideration of the following description in conjunction with the drawing figures, in which like reference numerals are carried forward. It is to be understood that the disclosed embodiments are merely exemplary of the invention, which can be embodied in various forms.

The present invention provides a novel and efficient urinal anti-splash device that prevents urine from splashing onto a user when the urine is deposited on the urinal wall, e.g., the urinal back wall, or in a direction toward the urinal drain. Advantageously, the urinal anti-splash device includes an anti-splash body and a base that may be separated from each other to provide a device that conforms to various types of urinals, while simultaneously covering a substantial portion of the overall surface area of the urinal. Embodiments of the invention also provide one or more protrusions that substantially span a longitudinal length of the anti-splash body and define one or more protrusion voids which allow the urine to flow in the direction toward the urinal drain.

Referring now to FIG. **1**, one embodiment of the present invention is shown in an elevational front view. FIG. **1** shows several advantageous features of the present invention, but, as will be described below, the invention can be provided in several shapes, sizes, combinations of features and components, and varying numbers and functions of the components. The first example of a urinal anti-splash device **100** placed within a urinal **102**, as shown in FIG. **1**, includes an anti-splash body **104** coupled to a base **106**. In one embodiment, the anti-splash body **104** is sized and shaped to couple to at least a portion of a urinal **102**, e.g., a standard sized urinal. The term "urinal" is defined herein in its broadest possible sense as a container or other receptacle normally found in a restroom and may include a standard sized adult urinal, a child's urinal, or the like. The urinal **102** may be of a shape that is, without limitation, rectangular, square, round, oval, or the like. It is understood that the urinal dimensions and shapes described herein are merely exemplary and not intended to be limiting.

In one embodiment, the portion of the urinal **102** configured to receive the anti-splash body **104** is a back wall **114** of the urinal **102**. In one embodiment, the back wall **114** may include a height of approximately 17.0-22.0 inches in length and a width that is approximately 9.0-14.0 inches in length. In other embodiments, the urinal **102** may include a length and a width that is outside of this range.

FIG. **1** depicts the anti-splash body **104** having a first portion **108**, a second portion **110** opposite the first portion **108**, and a length **112**, i.e., a longitudinal length, extending from the first portion **108** to the second portion **110**. In one embodiment, the length **112** permits the anti-splash body **104** to cover a substantial portion of the back wall **114** of the urinal **102** to prevent urine from splashing on a user when the urine strikes the anti-splash body **104**. The term "substantial portion" is defined herein as covering at least 40%-50% of the back wall **114** of the urinal **102**. In other embodiments, the length **112** covers less than the substantial portion of the back wall **114** of the urinal **102**.

In one embodiment, the anti-splash body **104** includes an elongated shape of a flexible material configured to couple to the urinal **102**. The term "elongated" is defined herein as having a length that is at least twice as long as a width. In other embodiments, the length may be less than twice as long as the width. For example, in one embodiment the length **112** is approximately 17.0-20.0 inches. In this embodiment, the anti-splash body may include a width **116** that is approximately 5.0-8.0 inches. In another embodiment, the length **112** may be approximately 13.0-16.0 inches and the width **116** may be approximately 3.0-6.0. In other embodiments, the length **112** and the width **116** may be outside of these ranges.

FIG. **1** depicts the elongated shape of the anti-splash body **104** being a rectangular-like shape. The term "rectangular-like" is defined herein as having at least one pair of opposing parallel sides of equal length. The term "rectangular-like" may encompass round or curved edges. In other embodiments, the anti-splash body **104** may be rectangular, square, round, oval, or another shape conducive for coupling to the back wall **114** of a urinal **102**.

In one embodiment, the anti-splash body **104** may be made of a material that is flexible and tough, such as DuPoint Elvax®250, PVC plastic, or the like. In other embodiments, the anti-splash body **104** may be composed of a composite material, a metallic material, or another material conducive for placement within a urinal. The material may or may not have elastically deformable properties (e.g., the ability to change its shape and return back to its static-state shape after its change in shape). In one advantageous embodiment, the material is a buoyant material that provides a base **106** that will rise above the water line where water remains in the urinal after flushing, thereby decreasing the risk of the urinal drain being blocked by the anti-splash device **100**. In other embodiments, the material may be a non-buoyant material.

In one embodiment, the urine is prevented from splashing onto the user when striking the anti-splash body **104** at least partly due to a first plurality of protrusions **118** being coupled to an upper surface **120** of the anti-splash body **104**. The term "protrusion" is defined herein as a part that extends away from the upper surface **120** and may include bristles, a wave pattern, one or more shapes, e.g., squares, or another configuration designed to prevent urine from splashing onto a user when using the anti-splash device **100**. In use, such as when a urine stream strikes the protrusions **118**, the urine may be broken apart by the protrusions **118**. Said another way, the anti-splash device **100** may not rely on a capillary action to reduce or prevent urine from splashing from the anti-splash device **100** onto a user.

Advantageously, the protrusions **118** define a plurality of protrusion voids **122** which permit the urine to effectively flow in a downward direction along the upper surface **120** toward the lower portion **124** of the urinal **102** which houses the urinal drain. In one embodiment, such as when the device **100** is disposed in a vertical direction with respect to the back wall **114** of the urinal **102**, gravity may assist in causing the urine to effectively flow in the downward direction toward the lower portion **124** of the urinal **102**. The protrusion voids **122** may also provide space for the protrusions **118** to bend and deflect when struck by the urine.

In order to effectively mount the anti-splash body **104** to the back wall **114**, the anti-splash body **104** includes at least one fastener **126** sized and shaped to orient the anti-splash body **104** in the vertical direction parallel to a vertical direction of the back wall **114**. FIG. **1** depicts the anti-splash body **104** mounted to the back wall **114** using a first suction cup coupled to the fastener **126** and a second suction cup coupled to a second fastener **128**. The fasteners **126**, **128** are depicted as apertures defined by the anti-splash body **104**. In other embodiments, the fasteners **126**, **128** may be adhesive, e.g., tape, hooks, or another type of fastener configured to mount the anti-splash body **104** in a stationary position relative to the back wall **114**.

With reference now to FIG. **2**, the base **106** is depicted as being coupled to the first portion **108** of the anti-splash body **104**. Generally speaking, the first portion **108** includes the

region extending approximately from a first end **200** to a midpoint along the length **112**. In the same vein, the second portion **110** includes the region extending approximately from a second end **202** to the midpoint along the length **112**. The midpoint is generally defined as being disposed approximately halfway between the first end **200** and the second end **202**.

With brief reference to FIG. **2**, in conjunction with FIG. **3**, in one advantageous embodiment, in order to effectively separate, e.g., removably couple, the anti-splash body **104** from the base **106** (FIG. **3**), the first end **200** includes a perforated coupling region **204** disposed between the first portion **108** and the base **106**. More specifically, the perforated coupling region **204** extends from the first portion **108** to the base **106** and includes a perforated edge **206** that facilitates in the ability to simply tear, split, or otherwise separate the first portion **108** of the anti-splash body **104** from the base **106** along the perforated edge **206**. The term "perforated" is defined herein as visibly displaying a hole, perforation, puncture, or other visible marking such that the user is provided with a visual indication of where the anti-splash body **104** may be uncoupled, i.e., separated, from the base **106**. Said another way, the anti-splash body **104** may be removably coupled from the base **106**. Advantageously, the perforated coupling region **204** not only allows the user to remove the base **106** from urinals with raised drainage points, but it also provides the user with the ability to independently move and position the anti-splash body **104** and the base **106** relative to select locations on a urinal.

In one embodiment, the perforated coupling region **204** is configured to translate the base **106** from a first position in which the base **106** is oriented in a direction parallel to the anti-splash body **104** (FIG. **2**) to a second position including the base **106** being oriented in a direction substantially perpendicular from the first portion **108** of the anti-splash body **104** (FIG. **3**). The term "substantially perpendicular" is defined herein as being disposed at an approximate 90 orientation (+/−15-20°) with respect to the first portion **108**. The base **106** may be translated from the first position to the second position when coupled to the anti-splash body **104** or alternatively, when separated from the anti-splash body **104**.

With reference again to FIG. **1**, the substantially perpendicular orientation of the base **106** enables the user to bend the urinal anti-splash device **100** in accordance with the dimensions of the urinal. In the same vein, this embodiment provides the urinal anti-splash device **100** that covers the urinal's back wall **114** and lower portion **124**, thereby reducing or preventing urine from splashing on the user when either or both the back wall **114** and the lower portion **124** are struck by a stream of urine. As an added advantage, the urinal anti-splash device **100** may be made from a single mold, effectively reducing the costs associated with making the urinal anti-splash device **100** in comparison to other existing urinal accessories that may require the manufacturing of separate components. In other embodiments, the anti-splash device **100**, e.g., the anti-splash body **104** and the base **106**, may be manufactured as separate components.

With reference now to FIG. **3**, a second plurality of protrusions **300** can be seen extending outwardly from the base **106**. The second plurality of protrusions **300** are configured to extend in the direction substantially perpendicular from the first portion **108** of the anti-splash body **104**. This configuration advantageously prevents urine from splashing onto the user when striking the base **106**. Similar to the protrusions **118** described above, in use, such as when a urine stream strikes the protrusions **300**, the urine may be broken apart by the protrusions **300**. Advantageously, the protrusions **300** define a plurality of protrusion voids **302** which permit the urine to effectively flow in the downward direction toward the urinal drain. In order to effectively allow the urine to flow into the urinal drain, the base **106** is depicted as defining a plurality of apertures **304** which define a urine flow path from the base **106** to the urinal drain. The protrusion voids **302** may also give space for the protrusions **300** to bend and deflect when struck by the urine.

With reference now to FIG. **4**, in order to prevent urine from bouncing off of the urinal drain screen in a direction toward the user, the base **106** is sized and shaped to cover at least a portion of the surface area of a urinal drain screen. In one embodiment, the portion may be at least 30% of the surface area of the urinal drain screen. In other embodiments, the base **106** may cover less than the 30% of the surface area of the urinal drain screen. In one non-limiting embodiment the base **106** includes a diameter **400** that is approximately 5.0-7.0 inches in length. In others embodiments, the diameter **400** may be outside of this range.

FIG. **4** depicts the shape of the base **106** as being a circular-like shape, i.e., different than the shape of the anti-splash body **104**. The term "circular-like" is defined herein as having at least two round edges. The circular-like shape is conducive for covering the urinal drain which is commonly a circular shape. In other embodiments, the shape of the base **106** and the shape of the anti-splash body **104** may be the same, e.g., rectangular, circular, square, round, oval, or another shape conducive for fitting within the urinal.

With reference now to FIG. **5**, an elevational side view of the urinal anti-splash device **100** is shown. More specifically, the first portion **108** is depicted having an angled region **500** to facilitate water and/or urine flow along the upper surface **120** in a direction toward the urinal drain. Additionally, the protrusions **118**, **300** are depicted as having a variable length which may also increase the facilitation of water and/or urine flow along the upper surface **120** toward the urinal drain. In other embodiments, the protrusions **118** and/or the protrusions **300** may have a uniform length. In one embodiment, the protrusions **118** include a protrusion length **502** that is between approximately 0.25 to 1.0 inch. In other embodiments, the protrusion length **502** may be outside of this range. In the same vein, in one embodiment, the protrusions **300** include a protrusion length **504** that is the same as the protrusion length **502**. In other embodiments, the protrusion length **504** may be outside of this range, e.g., between approximately 0.50 to 1.5 inches.

The protrusions **118**, **300** can be seen tapering downwardly in a direction toward the upper surface **120** of the anti-splash body **104** and the base **106** to further facilitate the water and/or urine flow. Said another way, the protrusions **118**, **300** are wider at the location of the base than at the top. Such configuration causes the protrusions **118**, **300** to break up the urine, while simultaneously allowing the urine to strike the upper surface **120** and travel in the downward direction toward the drain when the urinal anti-splash device **100** is disposed in the vertical orientation. The tapering configuration also decreases the complexity associated with the manufacturing process of the device **100** because the protrusions **118**, **300** may be relatively simply removed from the molding during the manufacturing process due to the lack of edges. In another embodiments, either the protrusions **118** or the protrusions **300** may include the tapering configuration. In other embodiments, the protrusions **118**, **300** may be of a uniform width and devoid of the tapering configuration.

In one embodiment, the urinal anti-splash device **100** may include a fragrance embedded within the material of the

urinal anti-splash device **100** during the manufacturing process, e.g., during the extrusion or molding phase of the manufacturing process. In another embodiment, the fragrance may be added to the material using a film process. The fragrance may be a volatile substance, such as a fragrant oil, an odor neutralizer, or the like. Such advantageous embodiments eliminate the need for the use of a room deodorizer or urinal cake that may be inconvenient and costly to consistently replace.

With reference now to FIG. **6**, the anti-splash body **104** is depicted as being coupled to and in the substantially perpendicular orientation relative to the base **106**. In one embodiment, the anti-splash body **104** and/or the base **106** made be made with a thermochromic material **600**. More specifically, a layer of thermochromic dye may be added to the upper surface **120** of the anti-splash body **104**. In a preferred embodiment, the layer of thermochromic dye may be added to the upper surface **120** of the anti-splash body **104** and the base **106**. The thermochromic dye may be, without limitation, spirolactone, fluoran, spiropyran, or fulgide, as commonly used by those of ordinary skill in the art. In other embodiments, another type of material may be used to form the thermochromic material **600**.

The thermochromic dye provides the user with the urinal anti-splash device **100** that changes color due to a change in temperature, e.g., that which occurs when urine strikes the thermochromic dye on the urinal anti-splash device **100**. Advantageously, the thermochromic dye is not only aesthetically appealing, but also allows a viewer, such as maintenance personnel, to observe rinse coverage and the flow of water in order to efficiently and effectively clean the anti-splash device **100**. As an added advantage, such configuration also allows businesses to advertise an insignia **602**, e.g., a business name and/or logo, which becomes visible when the anti-splash device **100** changes color during use.

FIG. **7** depicts a perspective rear view of the device **100** showing the anti-splash body **104** having a rear surface **700** that facilitates in the anti-splash body **104** being flush with the back wall **114** of the urinal (FIG. **1**). In one embodiment, the rear surface **700** is substantially level with the back wall **114** of the urinal. The term "substantially level" is defined herein as having a relatively flat surface with minimal sloping. In other embodiments, the rear surface **700** may include an uneven rear surface **700**, although the level rear surface **700** is preferred.

To effectuate the flow of a stream of urine along the urine flow path from the base **106** in a direction toward the urinal drain, FIG. **7** depicts the apertures **304***a-n* arranged in a substantially linear configuration. The indicator "a-n" is intended to represent any number of items, with "a" indicating **1** and "n" indicating any number greater than 1. The term "substantially linear" is defined herein as arranged in a nearly straight line allowing nominal deviation. The substantially linear configuration of the apertures **304***a-n* forces the stream of urine and/or water to be directed toward the urinal drain. In another embodiments, the apertures **304***a-n* may be arranged in another configuration, e.g., in a deviating configuration with respect to each other.

With reference now to the process flow chart of FIG. **8**, in conjunction with FIGS. **1-7**, an exemplary method of mounting a urinal anti-splash device within a urinal is shown. Although FIG. **8** shows a specific order of executing the process steps, the order of executing the steps may be changed relative to the order shown in certain embodiments. Also, two or more blocks shown in succession may be executed concurrently or with partial concurrence in some embodiments. Certain steps may also be omitted in FIG. **8** for the sake of brevity. In some embodiments, some or all of the process steps included in FIG. **8** can be combined into a single process.

In said process, the method begins as step **800** and immediately proceeds to step **802** of providing a urinal anti-splash device, such as the urinal anti-splash device **100** described above. More specifically, in one embodiment, the urinal anti-splash device **100** includes the anti-splash body **104** coupled to the base **106**. As discussed above, the anti-splash body **104** may also include the first plurality of protrusions **118** extending outwardly from the upper surface **120** of the anti-splash body **104** and the second plurality of protrusions **300** extending outwardly from the base **106**. The second plurality of protrusions **300** are configured to extend in the direction substantially perpendicular from the first portion **108** of the anti-splash body **104**.

In step **804**, the process continues with mounting the anti-splash body **104** within a back wall of a urinal. In one embodiment, such mounting may be performed using suctions cups coupled to at least one fastener disposed on the urinal anti-splash device **100**. In other embodiments, another type of fastener, e.g., adhesive, tape, hooks, etc., may be used to mount the anti-splash body **104** within the urinal.

Next, the process continues to the step of **806** of placing the base **106** over a urinal screen. Advantageously, in one embodiment, the process includes removably coupling, i.e., separating, the base **106** from the anti-splash body **104** such that the components may be independently positioned within the urinal. Such advantageous embodiment provides the urinal anti-splash device **100** that is not only conducive for placement within different size and shape urinals, but also may cover a portion of the surface area of the urinal, to prevent urine from splashing onto a user. The portion of the surface area of the urinal covered by the anti-splash device **100** may depend on the overall size of the urinal and the relative dimensions of the urinal anti-splash device **100**.

In another embodiment, the process may include bending the urinal anti-splash device **100** at a location of a perforated coupling region disposed between the first portion **108** of the anti-splash body **104** and the base **106**, as discussed above. The perforated coupling region is configured to translate the base **106** from a first position parallel to the anti-splash body **104** to a second position including the base **106** being in the direction substantially perpendicular from the first portion **108** of the anti-splash body **104**. In such configuration the base **106** may remain coupled to the anti-splash body **104**, or alternatively, may be detached from the anti-splash body **104**. The process then terminates at step **808**.

A urinal anti-splash device has been disclosed that not only includes an anti-splash body and a base that may be separated from each other to cover a back wall and a urinal screen to prevent urine from splashing onto a user of the urinal, but also provides an upper surface conducive for allowing the urine and/or water to flow in a downward direction toward the urinal drain.

What is claimed is:

1. A urinal anti-splash device comprising:

an anti-splash body sized and shaped to couple to at least a portion of a urinal, the anti-splash body including:

a first portion;

a second portion opposite the first portion;

a length extending from the first portion to the second portion; and

an upper surface extending the length;

a base couplable to the first portion and configured to extend in a direction substantially perpendicular from the first portion;

a first plurality of protrusions extending outwardly from the upper surface of the anti-splash body and which taper downwardly in a direction toward the upper surface of the anti-splash body; and

a second plurality of protrusions extending outwardly from the base, the second plurality of protrusions configured to extend in the direction substantially perpendicular from the first portion of the anti-splash body.

2. The urinal anti-splash device according to claim **1**, wherein:

the base is of a shape different than a shape of the anti-splash body.

3. The urinal anti-splash device according to claim **1**, wherein:

the anti-splash body includes an elongated shape of a flexible material configured to couple to a back wall of a urinal.

4. The urinal anti-splash device according to claim **1**, further comprising:

at least one fastener sized and shaped to orient the anti-splash body in a vertical direction parallel to a vertical direction of a urinal wall.

5. The urinal anti-splash device according to claim **1**, wherein:

the base is removably coupled to the first portion.

6. The urinal anti-splash device according to claim **1**, further comprising:

a perforated coupling region disposed between the first portion of the anti-splash body and the base, the perforated coupling region configured to translate the base from a first position parallel to the anti-splash body to a second position including the base being in the direction substantially perpendicular from the first portion of the anti-splash body.

7. The urinal anti-splash device according to claim **1**, wherein:

the base is made of buoyant material.

8. The urinal anti-splash device according to claim **1**, wherein:

the anti-splash body is a rectangular-like shape; and

the base is a circular-like shape.

9. The urinal anti-splash device according to claim **1**, wherein:

the first plurality of protrusions are of a variable length.

10. The urinal anti-splash device according to claim **1**, further comprising:

an angled portion at a top of the anti-splash body configured to facilitate flow along the upper surface.

11. A urinal anti-splash device comprising:

an anti-splash body configured to couple to a urinal wall, the anti-splash body including a first portion, a second portion opposite the first portion, and a longitudinal length separating the first portion from the second portion;

a base couplable to the first portion of the anti-splash body, the base sized and shaped to cover at least a portion of a urinal drain;

a coupling region configured to translate the base between a first position including the base oriented in a direction parallel to the anti-splash body and a second position including the base oriented in a direction substantially perpendicular from the base; and

a plurality of protrusions coupled to the anti-splash body and the base.

12. The urinal anti-splash device according to claim **11**, wherein:

the anti-splash body is of a shape different than a shape of the base.

13. The urinal anti-splash device according to claim **11**, wherein:

the base is removably coupled to the anti-splash body.

14. The urinal anti-splash device according to claim **11**, wherein:

the coupling region includes a perforated edge.

15. The urinal anti-splash device according to claim **11**, wherein:

the plurality of protrusions taper downwardly in a direction toward an upper surface of the anti-splash body and the base.

16. The urinal anti-splash device according to claim **11**, wherein:

the plurality of protrusions substantially span the longitudinal length and define a plurality of protrusion voids.

17. The urinal anti-splash device according to claim **11**, wherein:

the anti-splash body includes a thermochromic material.

18. A method of mounting a urinal anti-splash device within a urinal comprising:

providing a urinal anti-splash device including:

an anti-splash body sized and shaped to couple to at least a portion of a urinal, the anti-splash body including:

a first portion;

a second portion opposite the first portion;

a longitudinal length extending from the first portion to the second portion; and

an upper surface extending the longitudinal length;

a base couplable to the first portion and configured to extend in a direction substantially perpendicular from the first portion;

a coupling region disposed between the first portion of the anti-splash body and the base, the coupling region configured to allow the base to be moved from being substantially parallel to the anti-splash body in a first position to a second position substantially perpendicular to the anti-splash body;

a first plurality of protrusions extending outwardly from the upper surface of the anti-splash body; and

a second plurality of protrusions extending outwardly from the base, the second plurality of protrusions configured to extend in the direction substantially perpendicular from the first portion of the anti-splash body;

mounting the anti-splash body within a back wall of a urinal; and

placing the base over a urinal screen.

19. The method of mounting a urinal anti-splash device within a urinal according to claim **18**, further comprising:

removably coupling the anti-splash body from the base.

20. The method of mounting a urinal anti-splash device within a urinal according to claim **18**, further comprising:

bending the urinal anti-splash device at the coupling region.

* * * * *

EXHIBIT B

US010294649B2

(12) **United States Patent**
Crevier

(10) **Patent No.: US 10,294,649 B2**
(45) **Date of Patent: *May 21, 2019**

(54) **URINAL ANTI-SPLASH DEVICE**

(71) Applicant: **Jeffrey Scott Crevier**, Fort Lauderdale, FL (US)

(72) Inventor: **Jeffrey Scott Crevier**, Fort Lauderdale, FL (US)

(*) Notice: Subject to any disclaimer, the term of this patent is extended or adjusted under 35 U.S.C. 154(b) by 0 days.

This patent is subject to a terminal disclaimer.

(21) Appl. No.: **16/023,862**

(22) Filed: **Jun. 29, 2018**

(65) **Prior Publication Data**

US 2018/0305916 A1 Oct. 25, 2018

Related U.S. Application Data

(63) Continuation of application No. 15/342,543, filed on Nov. 3, 2016, now Pat. No. 10,036,154.

(51) **Int. Cl.**
E03D 13/00 (2006.01)

(52) **U.S. Cl.**
CPC ***E03D 13/005*** (2013.01)

(58) **Field of Classification Search**
CPC E03D 9/00
USPC 4/300, 300.3
See application file for complete search history.

(56) **References Cited**

U.S. PATENT DOCUMENTS

4,671,976 A 6/1987 Vidal
4,866,793 A 9/1989 Luedtke et al.
D329,893 S 9/1992 Luedtke et al.
5,313,672 A 5/1994 Luedtke et al.
5,398,347 A 3/1995 Luedtke et al.
D393,896 S 4/1998 Wagner et al.
5,774,905 A 7/1998 Wager et al.
5,809,590 A 9/1998 Williams et al.
D427,295 S 6/2000 Wagner
6,550,075 B1 4/2003 Brannon, III
D639,410 S 6/2011 Ramirez
8,043,498 B2 10/2011 Rueda
8,056,153 B2 11/2011 Ruedas
D678,482 S 3/2013 Williams
8,856,976 B1 10/2014 Niedzielski, III
8,856,977 B2 10/2014 Ramirez
(Continued)

OTHER PUBLICATIONS

Examination Report from the European Union Intellectual Property Office dated Oct. 4, 2018, pp. 1-5.

Primary Examiner — Lori Baker
(74) *Attorney, Agent, or Firm* — The Concept Law Group, P.A.; Scott M. Garrett; Scott D. Smiley

(57) **ABSTRACT**

A urinal anti-splash device including an anti-splash body sized and shaped to couple to at least a portion of a urinal. The anti-splash body may include a first portion, a second portion opposite the first portion, a longitudinal length extending from the first portion to the second portion, and an front surface extending the longitudinal length. The urinal anti-splash device also includes a base coupled to the first portion and configured to extend in a direction substantially perpendicular from the first portion. The urinal anti-splash device further includes a first plurality of protrusions extending outwardly from the front surface of the anti-splash body and a second plurality of protrusions extending outwardly from the base, the second plurality of protrusions configured to extend in the direction substantially perpendicular from the first portion of the anti-splash body.

20 Claims, 8 Drawing Sheets

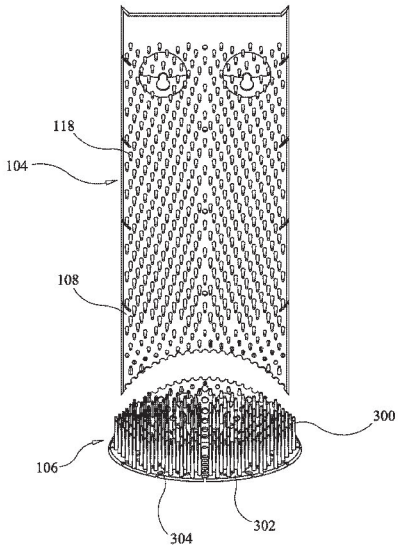

(56) **References Cited**

U.S. PATENT DOCUMENTS

D787,031	S	5/2017	Morgan-Williams	
10,036,154	B2 *	7/2018	Crevier	E03D 13/005
2004/0093662	A1	5/2004	Zhu	
2013/0000027	A1	1/2013	San Luis et al.	
2015/0047114	A1	2/2015	Ramirez	
2015/0143624	A1	5/2015	Irving	

* cited by examiner

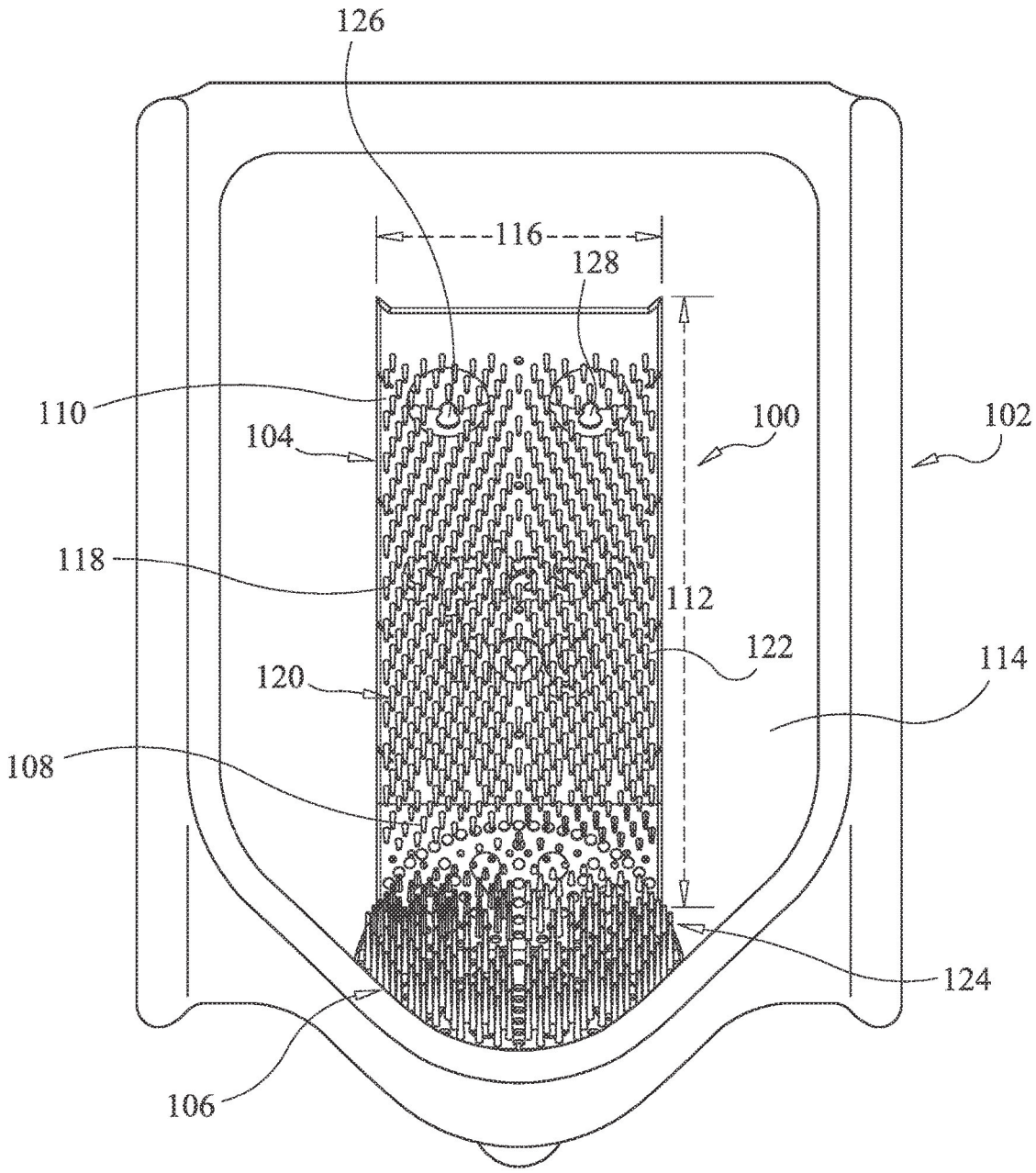

FIG. 1

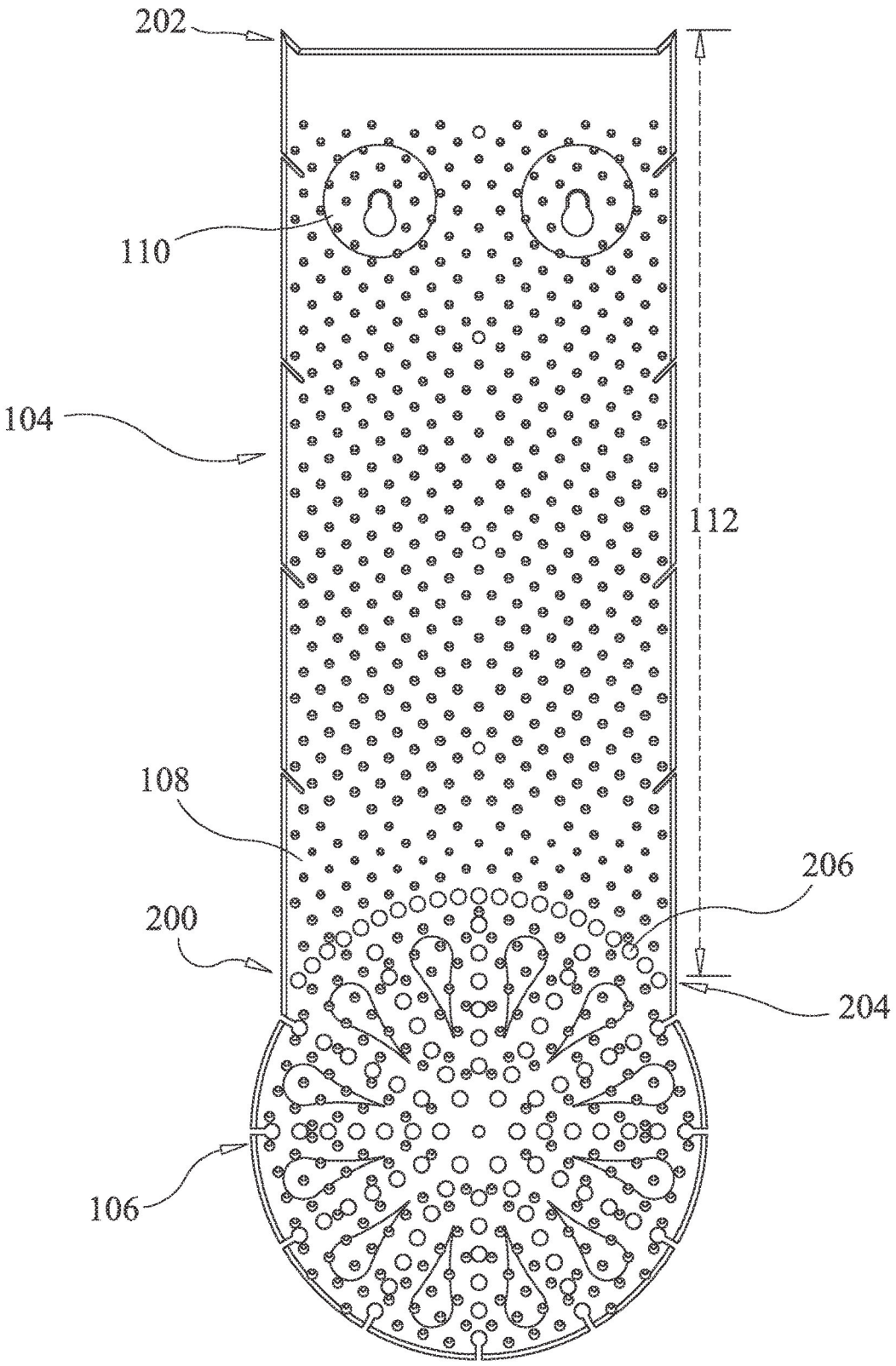

FIG. 2

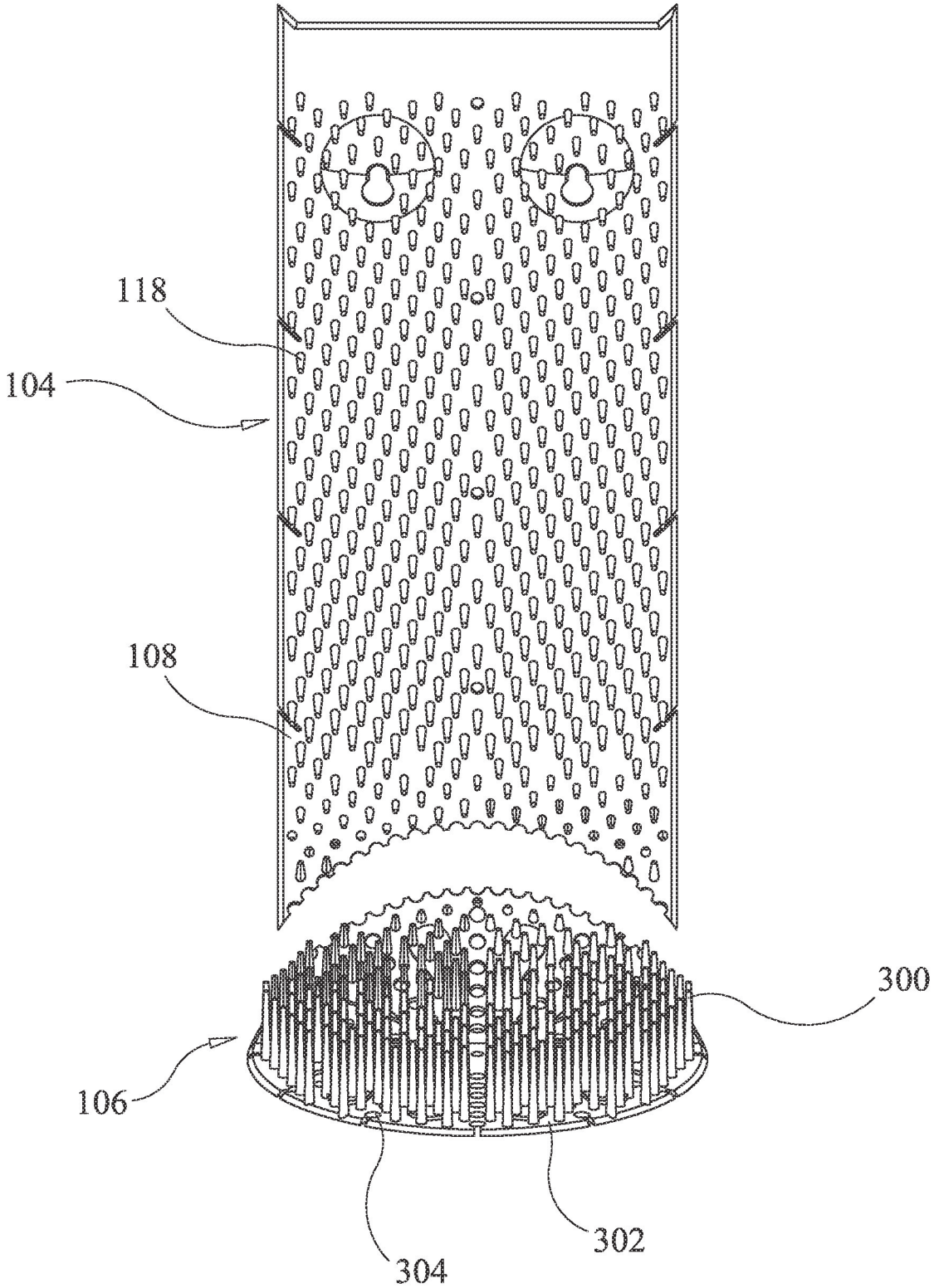

FIG. 3

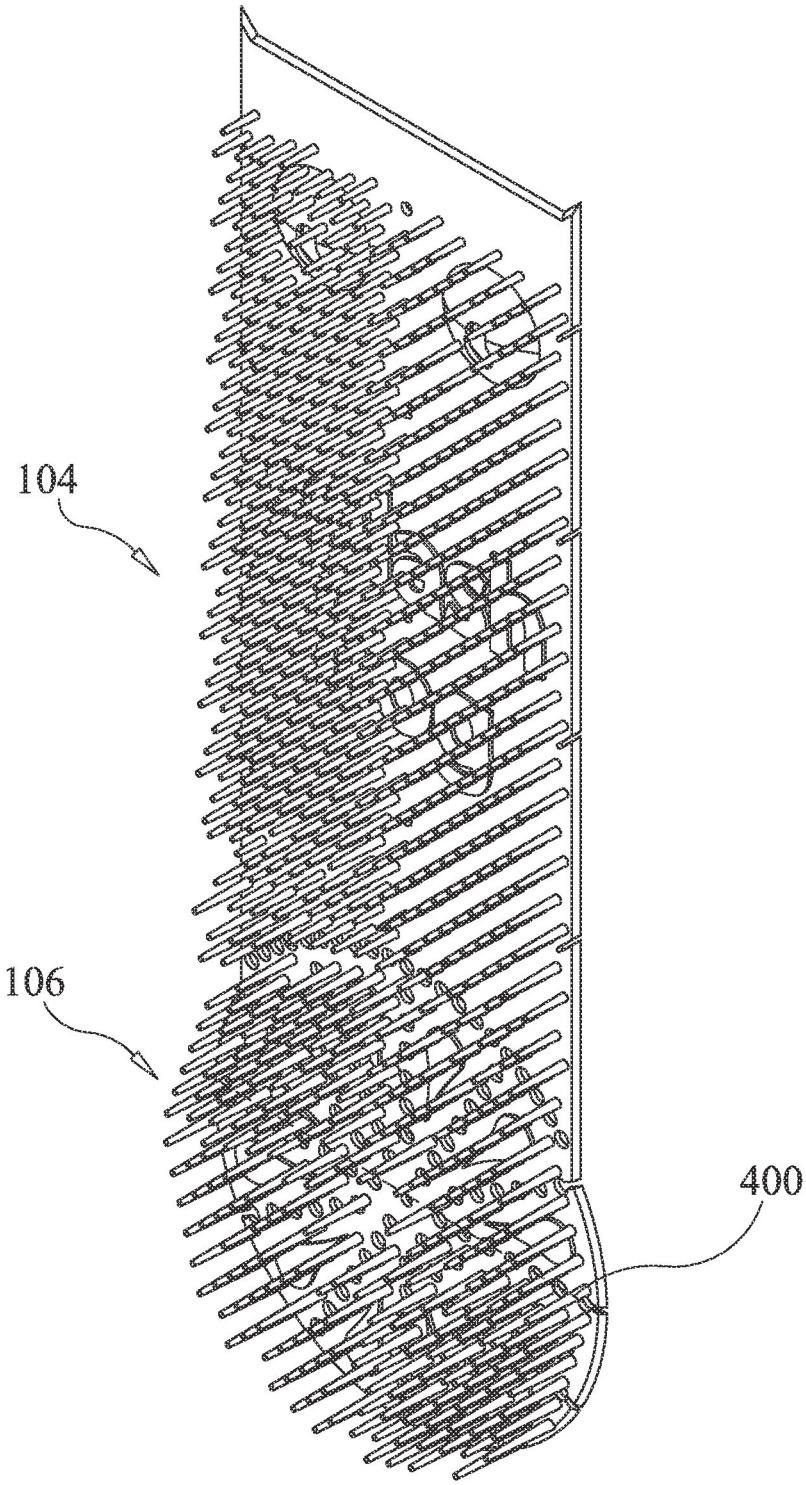

FIG. 4

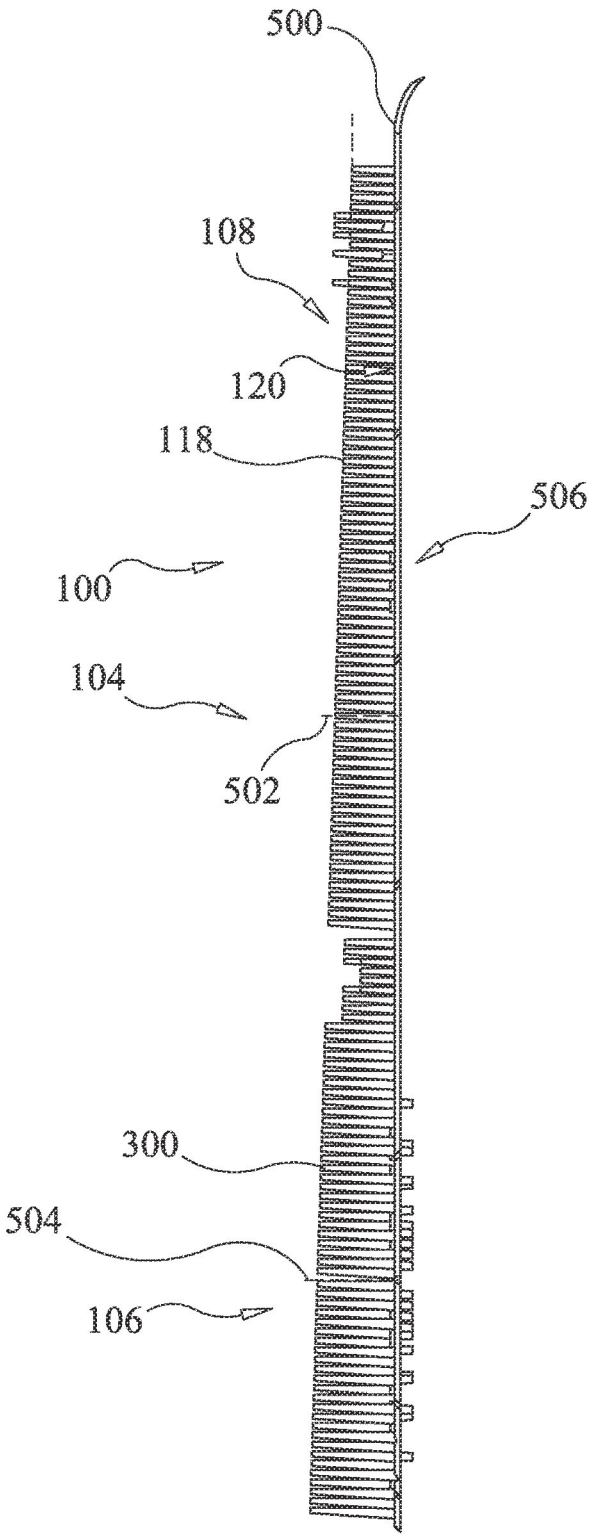

FIG. 5

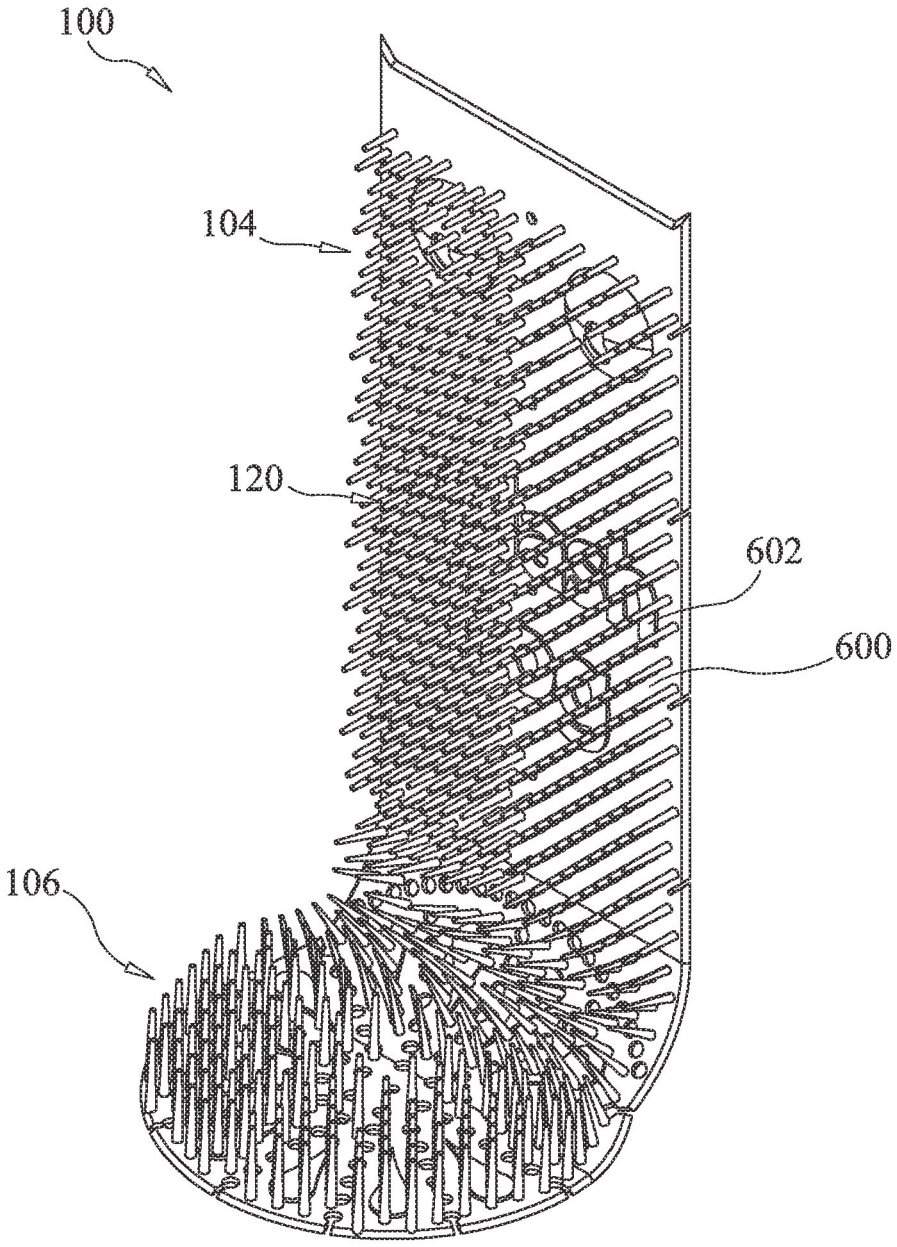

FIG. 6

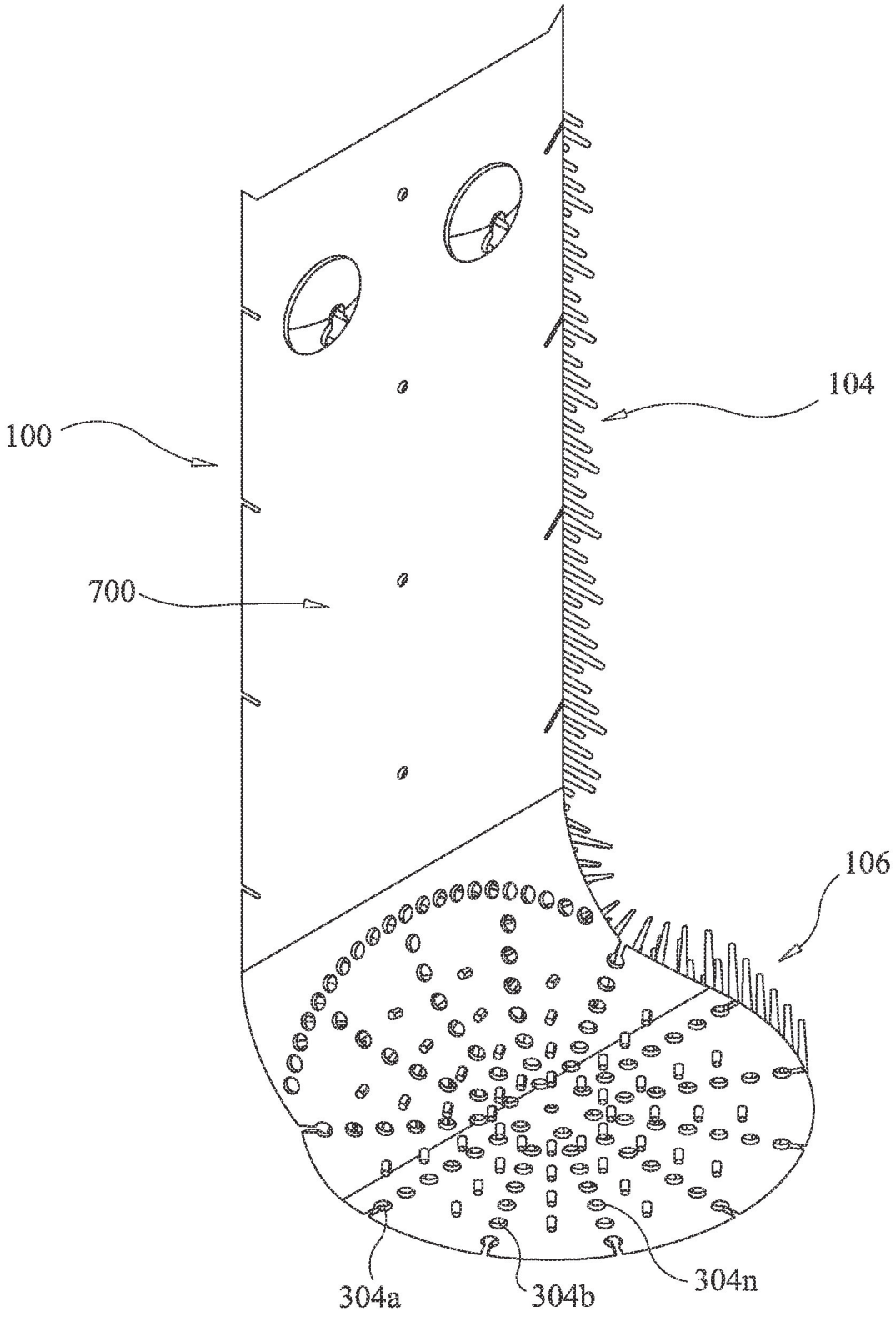

FIG. 7

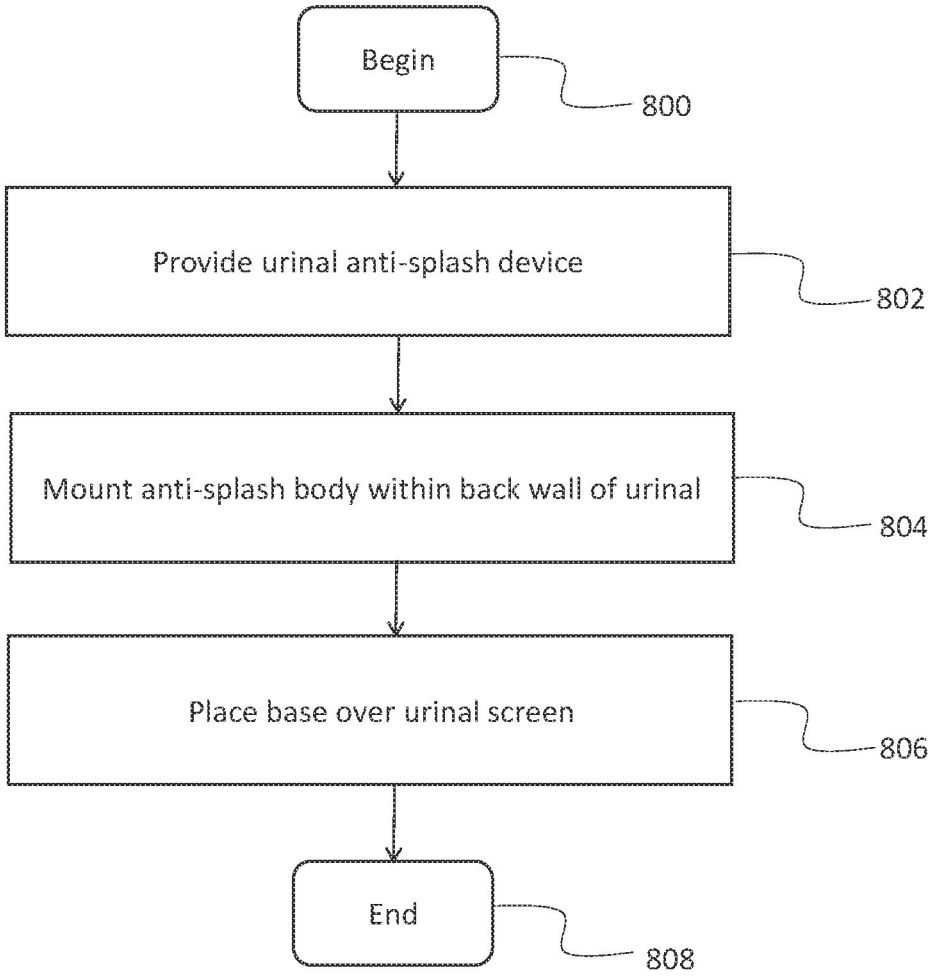
Begin
800
Provide urinal anti-splash device
802
Mount anti-splash body within back wall of urinal
804
Place base over urinal screen
806
End
808

FIG. 8

URINAL ANTI-SPLASH DEVICE

CROSS REFERENCE

This application is a continuation of U.S. application Ser. No. 15/342,543, titled "Urinal Anti-Splash Device," filed Nov. 3, 2016, the entirety of which is hereby incorporated by reference.

FIELD OF THE INVENTION

The present invention relates generally to urinal accessories, and, more particularly, relates to a urinal anti-splash device for placement within a urinal.

BACKGROUND OF THE INVENTION

A urinal, often installed for efficiency when compared to a general purpose toilet, is a sanitary plumbing fixture commonly located in male restrooms. The use of a urinal, in comparison to a general purpose toilet, is often more convenient for a user due to the absence of additional doors and locks. As an added convenience, urinals do not require a user to turn up a seat prior to use, which is both convenient and generally more sanitary than the toilet. Moreover, urinals occupy less space and consume less water per flush, or possibly no water at all, than a toilet which requires flushing.

Devices designed to be placed within urinals are well-known. For example, urinals found in public restrooms often have a plastic mesh guard to prevent large debris from entering the drain. Unfortunately, such plastic mesh guards fail to reduce or prevent the splashing of urine onto the user. In fact, such plastic mesh guards may actually increase the risk of the user being splashed by the urine as the urine ricochets from the plastic mesh guard. Moreover, these plastic mesh guards do not prevent the splashing of urine that is directed towards the back wall of the urinal.

Other known devices designed to be placed within urinals, often referred to as urinal screens or occasionally as urinal mats, are sized and shaped to cover either the urinal's back wall or the drain. Such urinal screens do not allow the user the option of covering both the back wall and the drain to prevent the urine from splashing onto the user from a maximum surface area of the urinal. Moreover, some urinal screens are made of a rigid material that may fail to conform to the various sizes and shapes of urinals.

Additional known devices designed for placement within a urinal often include protrusions that are densely compacted together, preventing a urine stream from flowing in a vertical direction toward the urinal screen. In this vein, such devices rely on the protrusions to break up the urine stream, leaving urine deposited on the protrusions, resulting in an unpleasant odor and the need for increased cleaning frequency of the device. Moreover, many urinal screens include urinal cakes or deodorizers which require costly and frequent replacement.

Therefore, a need exists to overcome the problems with the prior art as discussed above.

SUMMARY OF THE INVENTION

The invention provides a urinal anti-splash device that overcomes the hereinafore-mentioned disadvantages of the heretofore-known devices and methods of this general type and that provides a urinal anti-splash device sized and shaped to mate with a urinal back wall and a urinal screen

to prevent urine from splashing on a user when urine is deposited in the direction of the urinal back wall and/or the urinal screen.

With the foregoing and other objects in view, there is provided, in accordance with the inventive embodiments of the invention, a urinal anti-splash device that includes an anti-splash body that is configured to be mounted vertically on a back wall of a urinal and which has a plurality of protrusions that extend from a front surface of the anti-splash body. The urinal anti-splash device can further include a base that is attached to the anti-splash body at a coupling region formed between the base and the anti-splash body. The base can be configured to cover at least a portion of a urinal drain, and can have a plurality of protrusions that extend away from the base on a surface of the base that is contiguous with the front surface of the anti-splash body. The coupling region can be configured to allow the base to move between a first position, including the base oriented in a direction parallel to the anti-splash body, and a second position including the base oriented in a direction substantially perpendicular from the base.

In accordance with another feature, some embodiments can include that the anti-splash body is of a shape different than a shape of the base.

In accordance with another feature, some embodiments can include that the base is removably coupled to the anti-splash body at the coupling region.

In accordance with another feature, some embodiments can include that the coupling region includes perforations between the base and the anti-splash body.

In accordance with another feature, some embodiments can include that the plurality of protrusions taper downwardly in a direction toward an front surface of the anti-splash body and the base.

In accordance with another feature, some embodiments can include that the plurality of protrusions on the anti-splash body substantially span a longitudinal length of the anti-splash body and define a plurality of protrusion voids between the protrusions of the plurality of protrusions.

In accordance with another feature, some embodiments can include that the anti-splash body includes a thermochromic material.

There is further provided in accordance with some inventive embodiments of the invention, a urinal anti-splash device that includes an anti-splash body that is configured to be mounted on a back wall of a urinal. The anti-splash body can include a plurality of protrusions that extend from a front surface of the anti-splash body, and at least some of the protrusions have a base at the front surface of the anti-splash body that is wider than a top of the protrusion at the opposite end of the protrusion. The urinal anti-splash device can further include a base that is attached to the anti-splash body and which is configured to extend in a direction substantially perpendicular from the anti-splash body to cover a drain of a urinal, The base can further include a plurality of protrusions that extend outwardly from the base, the plurality of protrusions of the base are arranged to extend in a direction substantially perpendicular from plurality of protrusions of the anti-splash body.

In accordance with another feature, some embodiments can include that the base is of a shape different than a shape of the anti-splash body.

In accordance with another feature, some embodiments can include that the anti-splash body includes an elongated shape of a flexible material.

In accordance with another feature, some embodiments can further include at least one fastener that is sized and

shaped to orient the anti-splash body in a vertical direction parallel to a vertical direction of a urinal wall.

In accordance with another feature, some embodiments can include that the base is removably coupled to the first portion by a row of perforations between the base and the anti-splash body.

In accordance with another feature, some embodiments can further include a perforated coupling region disposed between the anti-splash body and the base. The perforated coupling region can be configured to allow the base move from a first position parallel to the anti-splash body to a second position including the base being in the direction substantially perpendicular from the first portion of the anti-splash body.

In accordance with another feature, some embodiments can include that the base is made of buoyant material.

In accordance with another feature, some embodiments can include that the anti-splash body is a rectangular-like shape, and the base is a circular-like shape.

In accordance with another feature, some embodiments can include that the plurality of protrusions on the anti-splash body are of a variable length.

In accordance with another feature, some embodiments can further include an angled surface at a top of the anti-splash body that is configured to direct a flow of water from the back wall of the urinal over the front surface of the anti-splash body when the anti-splash device is mounted in the urinal.

There is further provided in accordance with some inventive embodiments of the invention, a method of mounting a urinal anti-splash device within a urinal that includes providing a urinal anti-splash device which includes an anti-splash body configured to be mounted on a back wall of a urinal. The anti-splash body can include a plurality of protrusions extending from a front surface of the anti-splash body. At least some of the protrusions can have a base at the front surface of the anti-splash body that is wider than a top of the protrusion at the opposite end of the protrusion. Providing the urinal anti-splash device can further include providing the urinal anti-splash device with a base that is attached to the anti-splash body and which is configured to extend in a direction substantially perpendicular from the first portion to cover a drain of a urinal, and which further includes a plurality of protrusions extending outwardly from the base. The second plurality of protrusions can be arranged to extend in a direction substantially perpendicular from plurality of protrusions of the anti-splash body. The method can further include mounting the anti-splash body on the back wall of a urinal, and placing the base over a urinal drain.

In accordance with another feature, some embodiments can include providing the urinal anti-splash device with the base being removably coupled to the anti-splash body.

In accordance with another feature, some embodiments can include bending the urinal anti-splash device at a perforated coupling region disposed between the anti-splash body and the base, the perforated coupling region configured to allow the base to move relative to the anti-splash body, including to move from a first position parallel to the anti-splash body to a second position substantially perpendicular from the anti-splash body.

Although the invention is illustrated and described herein as embodied in a urinal anti-splash device, it is, nevertheless, not intended to be limited to the details shown because various modifications and structural changes may be made therein without departing from the spirit of the invention and within the scope and range of equivalents of the claims. Additionally, well-known elements of exemplary embodiments of the invention will not be described in detail or will be omitted so as not to obscure the relevant details of the invention.

Other features that are considered as characteristic for the invention are set forth in the appended claims. As required, detailed embodiments of the present invention are disclosed herein; however, it is to be understood that the disclosed embodiments are merely exemplary of the invention, which can be embodied in various forms. Therefore, specific structural and functional details disclosed herein are not to be interpreted as limiting, but merely as a basis for the claims and as a representative basis for teaching one of ordinary skill in the art to variously employ the present invention in virtually any appropriately detailed structure. Further, the terms and phrases used herein are not intended to be limiting; but rather, to provide an understandable description of the invention. While the specification concludes with claims defining the features of the invention that are regarded as novel, it is believed that the invention will be better understood from a consideration of the following description in conjunction with the drawing figures, in which like reference numerals are carried forward. The figures of the drawings are not drawn to scale.

Before the present invention is disclosed and described, it is to be understood that the terminology used herein is for the purpose of describing particular embodiments only and is not intended to be limiting. The terms "a" or "an," as used herein, are defined as one or more than one. The term "plurality," as used herein, is defined as two or more than two. The term "another," as used herein, is defined as at least a second or more. The terms "including" and/or "having," as used herein, are defined as comprising (i.e., open language). The term "coupled," as used herein, is defined as connected, although not necessarily directly, and not necessarily mechanically. The term "providing" is defined herein in its broadest sense, e.g., bringing/coming into physical existence, making available, and/or supplying to someone or something, in whole or in multiple parts at once or over a period of time.

As used herein, the terms "about" or "approximately" apply to all numeric values, whether or not explicitly indicated. These terms generally refer to a range of numbers that one of skill in the art would consider equivalent to the recited values (i.e., having the same function or result). In many instances these terms may include numbers that are rounded to the nearest significant figure. In this document, the term "longitudinal" should be understood to mean in a direction corresponding to an elongated direction of the body of the urinal anti-splash device in a direction from a ground surface toward a ceiling.

BRIEF DESCRIPTION OF THE DRAWINGS

The accompanying figures, where like reference numerals refer to identical or functionally similar elements throughout the separate views and which together with the detailed description below are incorporated in and form part of the specification, serve to further illustrate various embodiments and explain various principles and advantages all in accordance with the present invention.

FIG. **1** is an elevational front view of a urinal anti-splash device disposed in a urinal in accordance with the present invention;

FIG. **2** is an elevational front view of the urinal anti-splash device of FIG. **1** disposed outside of a urinal and depicting

a base disposed in a direction substantially parallel to an anti-splash body in accordance with the present invention;

FIG. **3** is an elevational front view of the urinal anti-splash device of FIG. **1** depicting the base uncoupled from and disposed in a direction substantially perpendicular to the anti-splash body in accordance with the present invention;

FIG. **4** is a perspective view of the urinal anti-splash device of FIG. **1** depicting further features of the base in accordance with the present invention;

FIG. **5** is an elevational side view of the urinal anti-splash device of FIG. **1** depicting a plurality of protrusions of a variable length in accordance with the present invention;

FIG. **6** is a perspective view of the urinal anti-splash device of FIG. **1** depicting the urinal anti-splash device having a thermochromic material added to the urinal anti-splash device in accordance with the present invention;

FIG. **7** is a perspective rear view of the urinal anti-splash device of FIG. **1** depicting the anti-splash body having a substantially level rear surface and the base defining a plurality of apertures; and

FIG. **8** is a process flow diagram depicting a method of mounting a urinal anti-splash device within a urinal in accordance with one embodiment of the present invention.

DETAILED DESCRIPTION

While the specification concludes with claims defining the features of the invention that are regarded as novel, it is believed that the invention will be better understood from a consideration of the following description in conjunction with the drawing figures, in which like reference numerals are carried forward. It is to be understood that the disclosed embodiments are merely exemplary of the invention, which can be embodied in various forms.

The present invention provides a novel and efficient urinal anti-splash device that prevents urine from splashing onto a user when the urine is deposited on the urinal wall, e.g., the urinal back wall, or in a direction toward the urinal drain. Advantageously, the urinal anti-splash device includes an anti-splash body and a base that may be separated from each other to provide a device that conforms to various types of urinals, while simultaneously covering a substantial portion of the overall surface area of the urinal. Embodiments of the invention also provide one or more protrusions that substantially span a longitudinal length of the anti-splash body and define one or more protrusion voids which allow the urine to flow in the direction toward the urinal drain.

Referring now to FIG. **1**, one embodiment of the present invention is shown in an elevational front view. FIG. **1** shows several advantageous features of the present invention, but, as will be described below, the invention can be provided in several shapes, sizes, combinations of features and components, and varying numbers and functions of the components. The first example of a urinal anti-splash device **100** placed within a urinal **102**, as shown in FIG. **1**, includes an anti-splash body **104** coupled to a base **106**. In one embodiment, the anti-splash body **104** is sized and shaped to couple to at least a portion of a urinal **102**, e.g., a standard sized urinal. The term "urinal" is defined herein in its broadest possible sense as a container or other receptacle normally found in a restroom and may include a standard sized adult urinal, a child's urinal, or the like. The urinal **102** may be of a shape that is, without limitation, rectangular, square, round, oval, or the like. It is understood that the urinal dimensions and shapes described herein are merely exemplary and not intended to be limiting.

In one embodiment, the portion of the urinal **102** configured to receive the anti-splash body **104** is a back wall **114** of the urinal **102**. In one embodiment, the back wall **114** may include a height of approximately 17.0-22.0 inches in length and a width that is approximately 9.0-14.0 inches in length. In other embodiments, the urinal **102** may include a length and a width that is outside of this range.

FIG. **1** depicts the anti-splash body **104** having a first portion **108**, a second portion **110** opposite the first portion **108**, and a length **112**, i.e., a longitudinal length, extending from the first portion **108** to the second portion **110**. In one embodiment, the length **112** permits the anti-splash body **104** to cover a substantial portion of the back wall **114** of the urinal **102** to prevent urine from splashing on a user when the urine strikes the anti-splash body **104**. The term "substantial portion" is defined herein as covering at least 40%-50% of the back wall **114** of the urinal **102**. In other embodiments, the length **112** covers less than the substantial portion of the back wall **114** of the urinal **102**.

In one embodiment, the anti-splash body **104** includes an elongated shape of a flexible material configured to couple to the urinal **102**. The term "elongated" is defined herein as having a length that is at least twice as long as a width. In other embodiments, the length may be less than twice as long as the width. For example, in one embodiment the length **112** is approximately 17.0-20.0 inches. In this embodiment, the anti-splash body may include a width **116** that is approximately 5.0-8.0 inches. In another embodiment, the length **112** may be approximately 13.0-16.0 inches and the width **116** may be approximately 3.0-6.0. In other embodiments, the length **112** and the width **116** may be outside of these ranges.

FIG. **1** depicts the elongated shape of the anti-splash body **104** being a rectangular-like shape. The term "rectangular-like" is defined herein as having at least one pair of opposing parallel sides of equal length. The term "rectangular-like" may encompass round or curved edges. In other embodiments, the anti-splash body **104** may be rectangular, square, round, oval, or another shape conducive for coupling to the back wall **114** of a urinal **102**.

In one embodiment, the anti-splash body **104** may be made of a material that is flexible and tough, such as DuPoint Elvax®250, PVC plastic, or the like. In other embodiments, the anti-splash body **104** may be composed of a composite material, a metallic material, or another material conducive for placement within a urinal. The material may or may not have elastically deformable properties (e.g., the ability to change its shape and return back to its static-state shape after its change in shape). In one advantageous embodiment, the material is a buoyant material that provides a base **106** that will rise above the water line where water remains in the urinal after flushing, thereby decreasing the risk of the urinal drain being blocked by the anti-splash device **100**. In other embodiments, the material may be a non-buoyant material.

In one embodiment, the urine is prevented from splashing onto the user when striking the anti-splash body **104** at least partly due to a first plurality of protrusions **118** being coupled to an front surface **120** of the anti-splash body **104**. The term "protrusion" is defined herein as a part that extends away from the front surface **120** and may include bristles, a wave pattern, one or more shapes, e.g., squares, or another configuration designed to prevent urine from splashing onto a user when using the anti-splash device **100**. In use, such as when a urine stream strikes the protrusions **118**, the urine may be broken apart by the protrusions **118**. Said another way, the anti-splash device **100** may not rely on a capillary

action to reduce or prevent urine from splashing from the anti-splash device **100** onto a user.

Advantageously, the protrusions **118** define a plurality of protrusion voids **122** which permit the urine to effectively flow in a downward direction along the front surface **120** toward the lower portion **124** of the urinal **102** which houses the urinal drain. In one embodiment, such as when the device **100** is disposed in a vertical direction with respect to the back wall **114** of the urinal **102**, gravity may assist in causing the urine to effectively flow in the downward direction toward the lower portion **124** of the urinal **102**. The protrusion voids **122** may also provide space for the protrusions **118** to bend and deflect when struck by the urine.

In order to effectively mount the anti-splash body **104** to the back wall **114**, the anti-splash body **104** includes at least one fastener **126** sized and shaped to orient the anti-splash body **104** in the vertical direction parallel to a vertical direction of the back wall **114**. FIG. **1** depicts the anti-splash body **104** mounted to the back wall **114** using a first suction cup coupled to the fastener **126** and a second suction cup coupled to a second fastener **128**. The fasteners **126**, **128** are depicted as apertures defined by the anti-splash body **104**. In other embodiments, the fasteners **126**, **128** may be adhesive, e.g., tape, hooks, or another type of fastener configured to mount the anti-splash body **104** in a stationary position relative to the back wall **114**.

With reference now to FIG. **2**, the base **106** is depicted as being coupled to the first portion **108** of the anti-splash body **104**. Generally speaking, the first portion **108** includes the region extending approximately from a first end **200** to a midpoint along the length **112**. In the same vein, the second portion **110** includes the region extending approximately from a second end **202** to the midpoint along the length **112**. The midpoint is generally defined as being disposed approximately halfway between the first end **200** and the second end **202**.

With brief reference to FIG. **2**, in conjunction with FIG. **3**, in one advantageous embodiment, in order to effectively separate, e.g., removably couple, the anti-splash body **104** from the base **106** (FIG. **3**), the first end **200** includes a perforated coupling region **204** disposed between the first portion **108** and the base **106**. More specifically, the perforated coupling region **204** extends from the first portion **108** to the base **106** and includes a perforated edge **206** that facilitates in the ability to simply tear, split, or otherwise separate the first portion **108** of the anti-splash body **104** from the base **106** along the perforated edge **206**. The term "perforated" is defined herein as visibly displaying a hole, perforation, puncture, or other visible marking such that the user is provided with a visual indication of where the anti-splash body **104** may be uncoupled, i.e., separated, from the base **106**. Said another way, the anti-splash body **104** may be removably coupled from the base **106**. Advantageously, the perforated coupling region **204** not only allows the user to remove the base **106** from urinals with raised drainage points, but it also provides the user with the ability to independently move and position the anti-splash body **104** and the base **106** relative to select locations on a urinal.

In one embodiment, the perforated coupling region **204** is configured to translate the base **106** from a first position in which the base **106** is oriented in a direction parallel to the anti-splash body **104** (FIG. **2**) to a second position including the base **106** being oriented in a direction substantially perpendicular from the first portion **108** of the anti-splash body **104** (FIG. **3**). The term "substantially perpendicular" is defined herein as being disposed at an approximate 90 orientation (+/−15-20°) with respect to the first portion **108**. The base **106** may be translated from the first position to the second position when coupled to the anti-splash body **104** or alternatively, when separated from the anti-splash body **104**.

With reference again to FIG. **1**, the substantially perpendicular orientation of the base **106** enables the user to bend the urinal anti-splash device **100** in accordance with the dimensions of the urinal. In the same vein, this embodiment provides the urinal anti-splash device **100** that covers the urinal's back wall **114** and lower portion **124**, thereby reducing or preventing urine from splashing on the user when either or both the back wall **114** and the lower portion **124** are struck by a stream of urine. As an added advantage, the urinal anti-splash device **100** may be made from a single mold, effectively reducing the costs associated with making the urinal anti-splash device **100** in comparison to other existing urinal accessories that may require the manufacturing of separate components. In other embodiments, the anti-splash device **100**, e.g., the anti-splash body **104** and the base **106**, may be manufactured as separate components.

With reference now to FIG. **3**, a second plurality of protrusions **300** can be seen extending outwardly from the base **106**. The second plurality of protrusions **300** are configured to extend in the direction substantially perpendicular from the first portion **108** of the anti-splash body **104**. This configuration advantageously prevents urine from splashing onto the user when striking the base **106**. Similar to the protrusions **118** described above, in use, such as when a urine stream strikes the protrusions **300**, the urine may be broken apart by the protrusions **300**. Advantageously, the protrusions **300** define a plurality of protrusion voids **302** which permit the urine to effectively flow in the downward direction toward the urinal drain. In order to effectively allow the urine to flow into the urinal drain, the base **106** is depicted as defining a plurality of apertures **304** which define a urine flow path from the base **106** to the urinal drain. The protrusion voids **302** may also give space for the protrusions **300** to bend and deflect when struck by the urine.

With reference now to FIG. **4**, in order to prevent urine from bouncing off of the urinal drain screen in a direction toward the user, the base **106** is sized and shaped to cover at least a portion of the surface area of a urinal drain screen. In one embodiment, the portion may be at least 30% of the surface area of the urinal drain screen. In other embodiments, the base **106** may cover less than the 30% of the surface area of the urinal drain screen. In one non-limiting embodiment the base **106** includes a diameter **400** that is approximately 5.0-7.0 inches in length. In others embodiments, the diameter **400** may be outside of this range.

FIG. **4** depicts the shape of the base **106** as being a circular-like shape, i.e., different than the shape of the anti-splash body **104**. The term "circular-like" is defined herein as having at least two round edges. The circular-like shape is conducive for covering the urinal drain which is commonly a circular shape. In other embodiments, the shape of the base **106** and the shape of the anti-splash body **104** may be the same, e.g., rectangular, circular, square, round, oval, or another shape conducive for fitting within the urinal.

With reference now to FIG. **5**, an elevational side view of the urinal anti-splash device **100** is shown. More specifically, the first portion **108** is depicted having an angled region **500** to facilitate water and/or urine flow along the front surface **120** in a direction toward the urinal drain. Additionally, the protrusions **118**, **300** are depicted as having a variable length which may also increase the facilitation of water and/or urine flow along the front surface **120** toward the urinal drain. In other embodiments, the protrusions **118** and/or the protrusions **300** may have a uniform length. In

one embodiment, the protrusions **118** include a protrusion length **502** that is between approximately 0.25 to 1.0 inch. In other embodiments, the protrusion length **502** may be outside of this range. In the same vein, in one embodiment, the protrusions **300** include a protrusion length **504** that is the same as the protrusion length **502**. In other embodiments, the protrusion length **504** may be outside of this range, e.g., between approximately 0.50 to 1.5 inches.

The protrusions **118**, **300** can be seen tapering downwardly in a direction toward the front surface **120** of the anti-splash body **104** and the base **106** to further facilitate the water and/or urine flow. Said another way, the protrusions **118**, **300** are wider at the location of the base than at the top. Such configuration causes the protrusions **118**, **300** to break up the urine, while simultaneously allowing the urine to strike the front surface **120** and travel in the downward direction toward the drain when the urinal anti-splash device **100** is disposed in the vertical orientation. The tapering configuration also decreases the complexity associated with the manufacturing process of the device **100** because the protrusions **118**, **300** may be relatively simply removed from the molding during the manufacturing process due to the lack of edges. In another embodiments, either the protrusions **118** or the protrusions **300** may include the tapering configuration. In other embodiments, the protrusions **118**, **300** may be of a uniform width and devoid of the tapering configuration.

In one embodiment, the urinal anti-splash device **100** may include a fragrance embedded within the material of the urinal anti-splash device **100** during the manufacturing process, e.g., during the extrusion or molding phase of the manufacturing process. In another embodiment, the fragrance may be added to the material using a film process. The fragrance may be a volatile substance, such as a fragrant oil, an odor neutralizer, or the like. Such advantageous embodiments eliminate the need for the use of a room deodorizer or urinal cake that may be inconvenient and costly to consistently replace.

With reference now to FIG. **6**, the anti-splash body **104** is depicted as being coupled to and in the substantially perpendicular orientation relative to the base **106**. In one embodiment, the anti-splash body **104** and/or the base **106** made be made with a thermochromic material **600**. More specifically, a layer of thermochromic dye may be added to the front surface **120** of the anti-splash body **104**. In a preferred embodiment, the layer of thermochromic dye may be added to the front surface **120** of the anti-splash body **104** and the base **106**. The thermochromic dye may be, without limitation, spirolactone, fluoran, spiropyran, or fulgide, as commonly used by those of ordinary skill in the art. In other embodiments, another type of material may be used to form the thermochromic material **600**.

The thermochromic dye provides the user with the urinal anti-splash device **100** that changes color due to a change in temperature, e.g., that which occurs when urine strikes the thermochromic dye on the urinal anti-splash device **100**. Advantageously, the thermochromic dye is not only aesthetically appealing, but also allows a viewer, such as maintenance personnel, to observe rinse coverage and the flow of water in order to efficiently and effectively clean the anti-splash device **100**. As an added advantage, such configuration also allows businesses to advertise an insignia **602**, e.g., a business name and/or logo, which becomes visible when the anti-splash device **100** changes color during use.

FIG. **7** depicts a perspective rear view of the device **100** showing the anti-splash body **104** having a rear surface **700** that facilitates in the anti-splash body **104** being flush with the back wall **114** of the urinal (FIG. **1**). In one embodiment, the rear surface **700** is substantially level with the back wall **114** of the urinal. The term "substantially level" is defined herein as having a relatively flat surface with minimal sloping. In other embodiments, the rear surface **700** may include an uneven rear surface **700**, although the level rear surface **700** is preferred.

To effectuate the flow of a stream of urine along the urine flow path from the base **106** in a direction toward the urinal drain, FIG. **7** depicts the apertures **304**a-n arranged in a substantially linear configuration. The indicator "a-n" is intended to represent any number of items, with "a" indicating 1 and "n" indicating any number greater than 1. The term "substantially linear" is defined herein as arranged in a nearly straight line allowing nominal deviation. The substantially linear configuration of the apertures **304**a-n forces the stream of urine and/or water to be directed toward the urinal drain. In another embodiments, the apertures **304**a-n may be arranged in another configuration, e.g., in a deviating configuration with respect to each other.

With reference now to the process flow chart of FIG. **8**, in conjunction with FIGS. **1-7**, an exemplary method of mounting a urinal anti-splash device within a urinal is shown. Although FIG. **8** shows a specific order of executing the process steps, the order of executing the steps may be changed relative to the order shown in certain embodiments. Also, two or more blocks shown in succession may be executed concurrently or with partial concurrence in some embodiments. Certain steps may also be omitted in FIG. **8** for the sake of brevity. In some embodiments, some or all of the process steps included in FIG. **8** can be combined into a single process.

In said process, the method begins as step **800** and immediately proceeds to step **802** of providing a urinal anti-splash device, such as the urinal anti-splash device **100** described above. More specifically, in one embodiment, the urinal anti-splash device **100** includes the anti-splash body **104** coupled to the base **106**. As discussed above, the anti-splash body **104** may also include the first plurality of protrusions **118** extending outwardly from the front surface **120** of the anti-splash body **104** and the second plurality of protrusions **300** extending outwardly from the base **106**. The second plurality of protrusions **300** are configured to extend in the direction substantially perpendicular from the first portion **108** of the anti-splash body **104**.

In step **804**, the process continues with mounting the anti-splash body **104** within a back wall of a urinal. In one embodiment, such mounting may be performed using suctions cups coupled to at least one fastener disposed on the urinal anti-splash device **100**. In other embodiments, another type of fastener, e.g., adhesive, tape, hooks, etc., may be used to mount the anti-splash body **104** within the urinal.

Next, the process continues to the step of **806** of placing the base **106** over a urinal screen. Advantageously, in one embodiment, the process includes removably coupling, i.e., separating, the base **106** from the anti-splash body **104** such that the components may be independently positioned within the urinal. Such advantageous embodiment provides the urinal anti-splash device **100** that is not only conducive for placement within different size and shape urinals, but also may cover a portion of the surface area of the urinal, to prevent urine from splashing onto a user. The portion of the surface area of the urinal covered by the anti-splash device **100** may depend on the overall size of the urinal and the relative dimensions of the urinal anti-splash device **100**.

In another embodiment, the process may include bending the urinal anti-splash device **100** at a location of a perforated coupling region disposed between the first portion **108** of the anti-splash body **104** and the base **106**, as discussed above. The perforated coupling region is configured to translate the base **106** from a first position parallel to the anti-splash body **104** to a second position including the base **106** being in the direction substantially perpendicular from the first portion **108** of the anti-splash body **104**. In such configuration the base **106** may remain coupled to the anti-splash body **104**, or alternatively, may be detached from the anti-splash body **104**. The process then terminates at step **808**.

A urinal anti-splash device has been disclosed that not only includes an anti-splash body and a base that may be separated from each other to cover a back wall and a urinal screen to prevent urine from splashing onto a user of the urinal, but also provides an front surface conducive for allowing the urine and/or water to flow in a downward direction toward the urinal drain.

What is claimed is:

1. A urinal anti-splash device, comprising:

an anti-splash body configured to be mounted vertically on a back wall of a urinal and having a plurality of protrusions that extend from a front surface of the anti-splash body;

a base attached to the anti-splash body at a coupling region formed between the base and the anti-splash body, the base being configured to cover at least a portion of a urinal drain and having a plurality of protrusions extending away from the base on a surface of the base that is contiguous with the front surface of the anti-splash body;

the coupling region is configured allow the base to move between a first position including the base oriented in a direction parallel to the anti-splash body and a second position including the base oriented in a direction substantially perpendicular from the base.

2. The urinal anti-splash device according to claim **1**, wherein the anti-splash body is of a shape different than a shape of the base.

3. The urinal anti-splash device according to claim **1**, wherein the base is removably coupled to the anti-splash body at the coupling region.

4. The urinal anti-splash device according to claim **3**, wherein the coupling region includes perforations between the base and the anti-splash body.

5. The urinal anti-splash device according to claim **1**, wherein the plurality of protrusions taper downwardly in a direction toward an front surface of the anti-splash body and the base.

6. The urinal anti-splash device according to claim **1**, wherein the plurality of protrusions on the anti-splash body substantially span a longitudinal length of the anti-splash body and define a plurality of protrusion voids between the protrusions of the plurality of protrusions.

7. The urinal anti-splash device according to claim **1**, wherein the anti-splash body includes a thermochromic material.

8. A urinal anti-splash device comprising:

an anti-splash body configured to be mounted on a back wall of a urinal, the anti-splash body including a plurality of protrusions extending from a front surface of the anti-splash body, wherein at least some of the protrusions have a base at the front surface of the anti-splash body that is wider than a top of the protrusion at the opposite end of the protrusion; and

a base that is attached to the anti-splash body and which is configured to extend in a direction substantially perpendicular from the anti-splash body to at least partially cover a drain of a urinal, and which further includes a plurality of protrusions extending outwardly from the base which are arranged to extend in a direction substantially perpendicular to plurality of protrusions of the anti-splash body.

9. The urinal anti-splash device according to claim **8**, wherein the base is of a shape different than a shape of the anti-splash body.

10. The urinal anti-splash device according to claim **8**, wherein the anti-splash body includes an elongated shape of a flexible material.

11. The urinal anti-splash device according to claim **8**, further comprising at least one fastener that is sized and shaped to orient the anti-splash body in a vertical direction parallel to a vertical direction of a urinal wall.

12. The urinal anti-splash device according to claim **8**, wherein the base is removably coupled to the first portion by a row of perforations between the base and the anti-splash body.

13. The urinal anti-splash device according to claim **8**, further comprising:

a perforated coupling region disposed between the anti-splash body and the base, the perforated coupling region configured to allow the base move from a first position parallel to the anti-splash body to a second position including the base being in the direction substantially perpendicular from the first portion of the anti-splash body.

14. The urinal anti-splash device according to claim **8**, wherein the base is made of buoyant material.

15. The urinal anti-splash device according to claim **8**, wherein the anti-splash body is a rectangular-like shape, and the base is a circular-like shape.

16. The urinal anti-splash device according to claim **8**, wherein the plurality of protrusions on the anti-splash body are of a variable length.

17. The urinal anti-splash device according to claim **8**, further comprising an angled surface at a top of the anti-splash body that is configured to direct a flow of water from the back wall of the urinal over the front surface of the anti-splash body when the anti-splash device is mounted in the urinal.

18. A method of mounting a urinal anti-splash device within a urinal comprising:

providing a urinal anti-splash device including:

an anti-splash body configured to be mounted on a back wall of a urinal, the anti-splash body including a plurality of protrusions extending from a front surface of the anti-splash body, wherein at least some of the protrusions have a base at the front surface of the anti-splash body that is wider than a top of the protrusion at the opposite end of the protrusion;

a base that is attached to the anti-splash body and which is configured to extend in a direction substantially perpendicular from the first portion to cover a drain of a urinal, and which further includes a plurality of protrusions extending outwardly from the base, the second plurality of protrusions are arranged to extend in a direction substantially perpendicular from plurality of protrusions of the anti-splash body;

mounting the anti-splash body on the back wall of a urinal; and

placing the base over a urinal drain.

19. The method of mounting a urinal anti-splash device within a urinal according to claim **18**, further comprising providing the urinal anti-splash device with the base being removably coupled to the anti-splash body.

20. The method of mounting a urinal anti-splash device within a urinal according to claim **18**, further comprising bending the urinal anti-splash device at a perforated coupling region disposed between the anti-splash body and the base, the perforated coupling region configured to allow the base to move relative to the anti-splash body, including to move from a first position parallel to the anti-splash body to a second position substantially perpendicular from the anti-splash body.

* * * * *

EXHIBIT C

Tsunami
A Surge of 60-Day Protection

Tsunami Urinal Screen

A Surge of 60-Day Protection

Reversible

Patented High Fragrance Load

Lasts 60 Days

Date Tabs

Beneficial Bacteria

Private Label-able

60 days of fragrance

Almost 3x more fragrance than competitive screens

No mounting

- Faster installation and removal
- No suction cups resulting in less waste

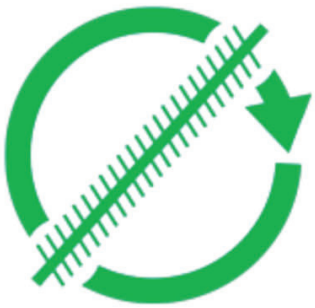

Reversible

- Creates better, more even fragrance evaporation
- No installation errors

Fresh Products Ex. 1002
IPR Petition - USP 10,036,154

As always:

- Beneficial bacteria consume the source of odors
- Indicator date tabs remind when to replace
- Patented fragrance load – no one freshens stronger

Video Preview

Available Fragrances

Product FAQs

- Can I private label the Tsunami?
- How much splash reduction does the Tsunami provide?
- How do you know which side should face out on Tsunami?
- Do you need suction cups or something else to install the Tusnami?
- Do you offer custom fragrances for any of your products?

Technical Specifications

Unit

Image	Length	Width	Height	Weight
	15.5 in	6.5 in	0.875 in	148 g

Inner Box

Codes

Fresh Products Ex. 1002
IPR Petition - USP 10,036,154

Item Codes

Product Documents

QUICK NAVIGATION

- Products
- SDS – Safety Data Sheets
- Career Opportunities
- Contact Us
- SB-258 Right to Know

DOWNLOAD OUR CATALOG

CONTACT US

Fresh Products Office
ADDRESS:
30600 Oregon Road
Perrysburg, OH 43551 - USA
PHONE:
+1 419•531•9741
FAX:
+1 419•531•8472
MESSAGE US:
Contact Sales

Copyright © 2012 - 2023 Fresh Products LLC | All Rights Reserved
Terms of Service | Privacy Policy

Fresh Products Ex. 1002
IPR Petition - USP 10,036,154

EXHIBIT D

<table>
<tr><th colspan="2">The ‘154 Patent</th></tr>
<tr><td>Claim 1</td><td></td></tr>
<tr><td>1. A urinal anti-splash device comprising</td><td>

TSUNAMI PICTURE FROM FRESH PRODUCTS WEBSITE</td></tr>
<tr><td>an anti-splash body sized and shaped to couple to at least a portion of a urinal, the anti-splash body including;</td><td>

Anti-splash Body sized and shaped to couple to a back-wall portion of the urinal

TSUNAMI PICTURE FROM FRESH PRODUCTS WEBSITE</td></tr>
</table>

a first portion;

a second portion opposite the first portion;

a length extending from the first portion to the second portion;

and an upper surface extending the length;

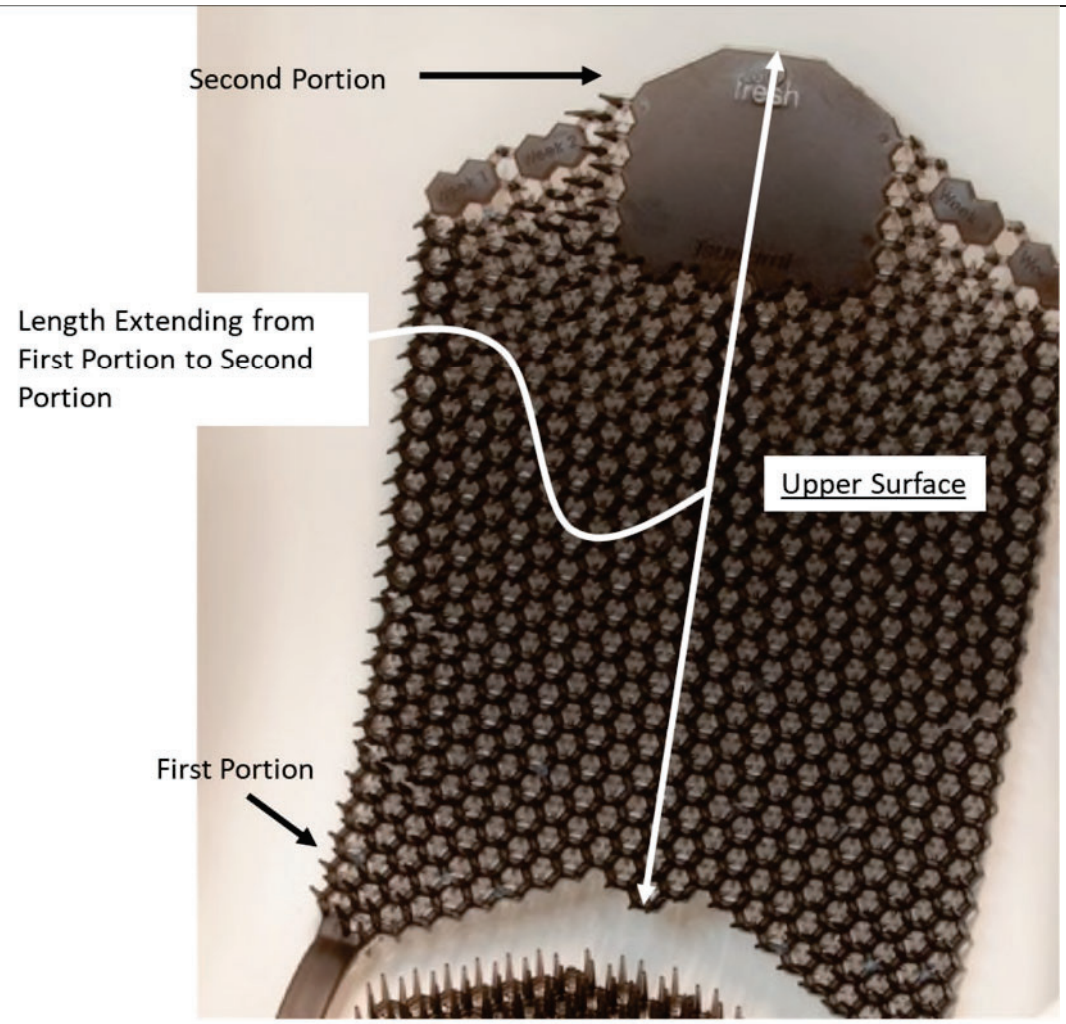

TSUNAMI PICTURE FROM FRESH PRODUCTS WEBSITE

a base couplable to the first portion and configured to extend in a direction substantially perpendicular from the first portion;	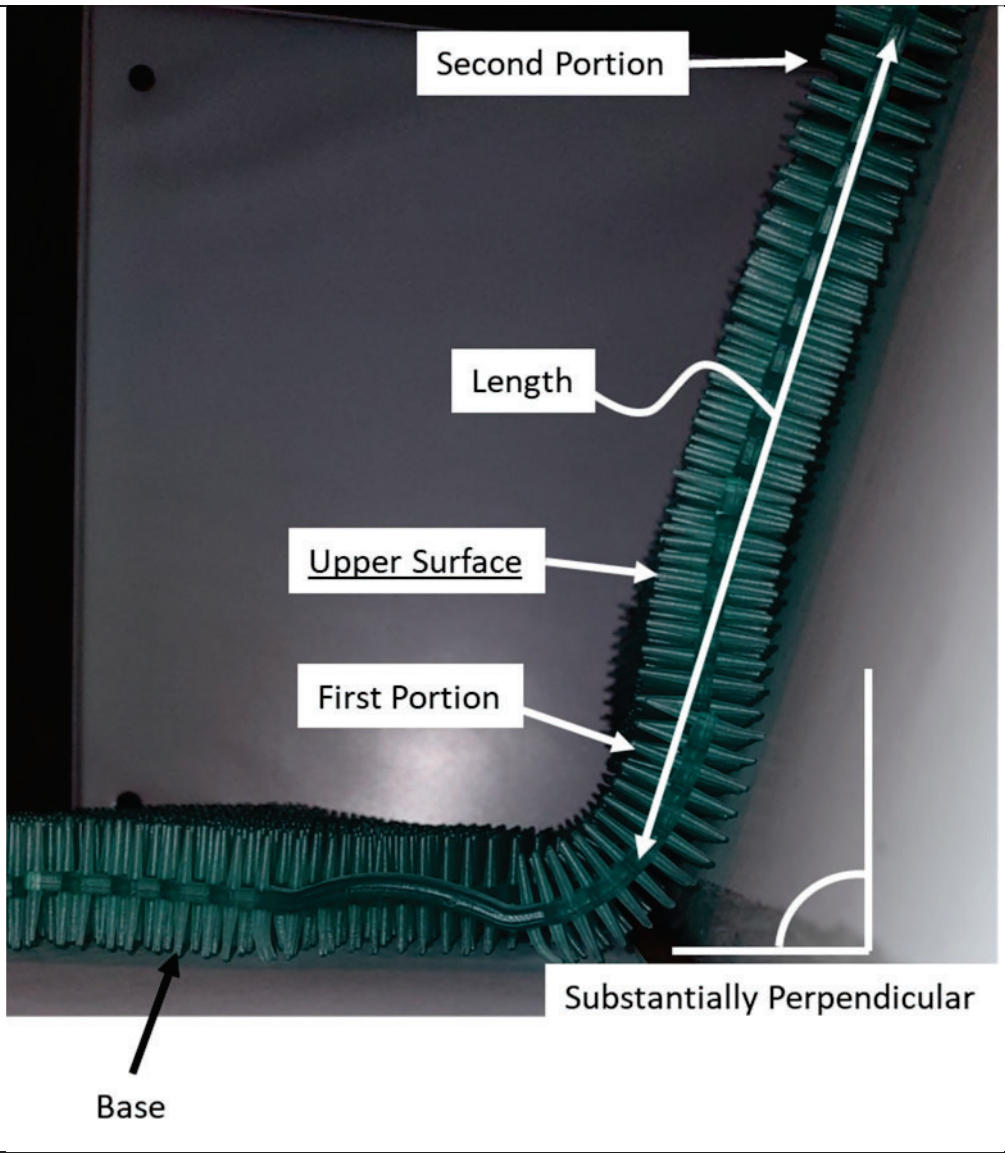

a first plurality of protrusions extending outwardly from the upper surface of the anti-splash body and which taper downwardly in a direction toward the upper surface of the anti-splash body; and	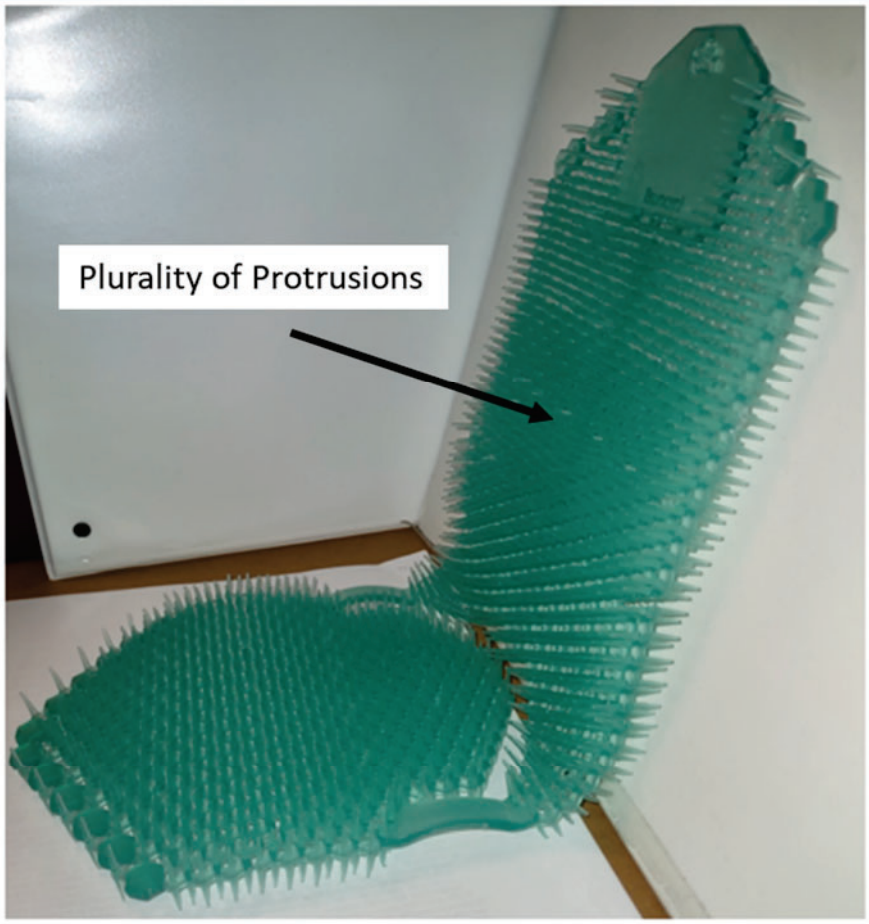 SIDE VIEW OF TSUNAMI DEVICE 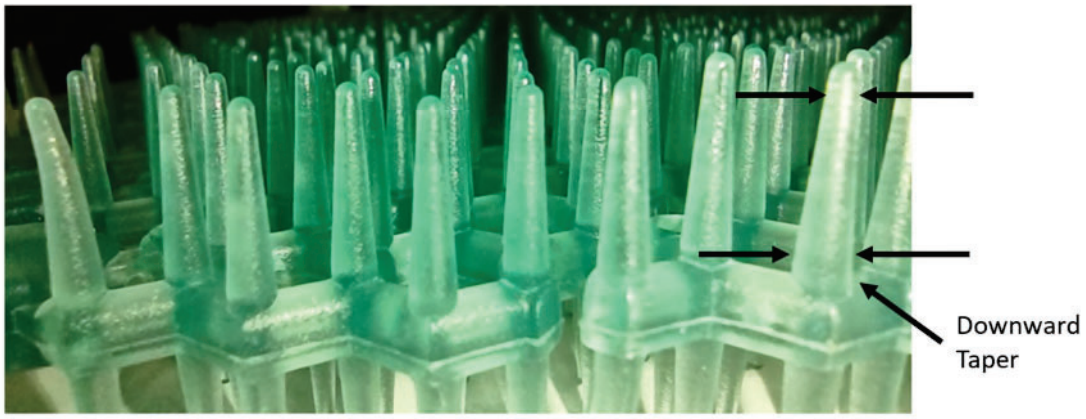 DETAIL OF PROTRUSIONS OF TSUNAMI DEVICE

a second plurality of protrusions extending outwardly from the base, the second plurality of protrusions configured to extend in the direction substantially perpendicular from the first portion of the anti-splash body.	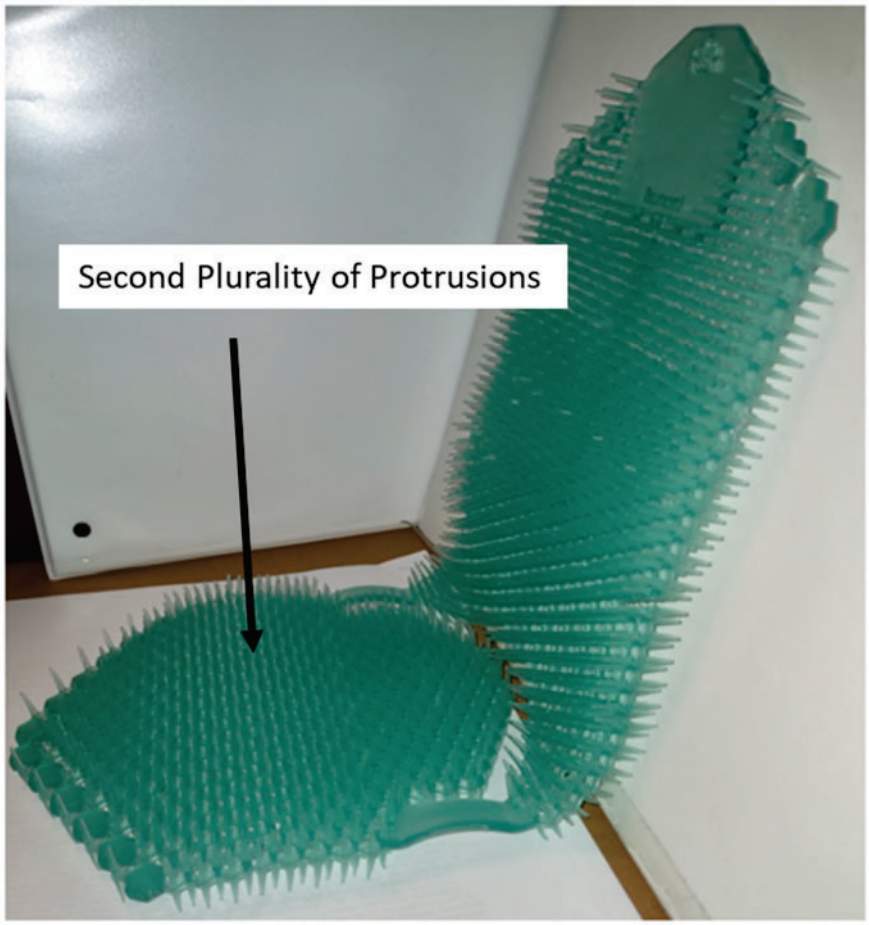 **SIDE VIEW OF TSUNAMI DEVICE**

The '649 Patent	
Claim 1	
1. A urinal anti-splash device, comprising:	 TSUNAMI PICTURE FROM FRESH PRODUCTS WEBSITE
an anti-splash body configured to be mounted vertically on a back wall of a urinal and having a plurality of protrusions that extend from a front surface of the anti-splash body;	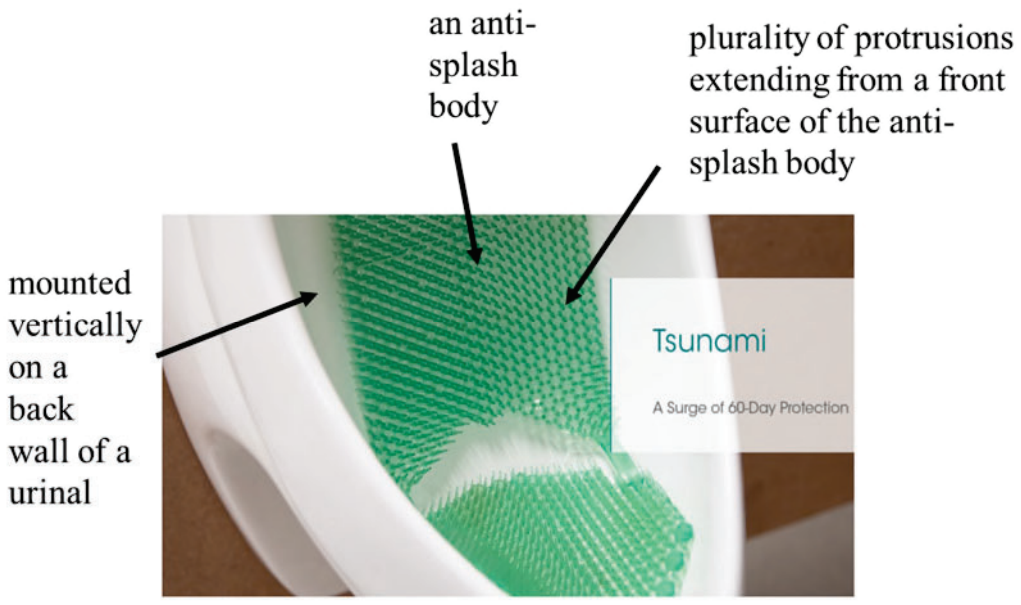 TSUNAMI PICTURE FROM FRESH PRODUCTS WEBSITE

	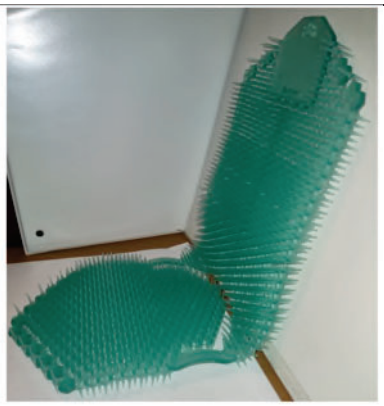 SIDE VIEW OF TSUNAMI DEVICE DETAIL OF PROTRUSIONS OF TSUNAMI DEVICE
a base attached to the anti-splash body at a coupling region formed between the base and the anti-splash body, the base being configured to cover at least a portion of a urinal drain and having a plurality of protrusions extending away from the base on a surface of the base that is contiguous with the front surface of the anti-splash body;	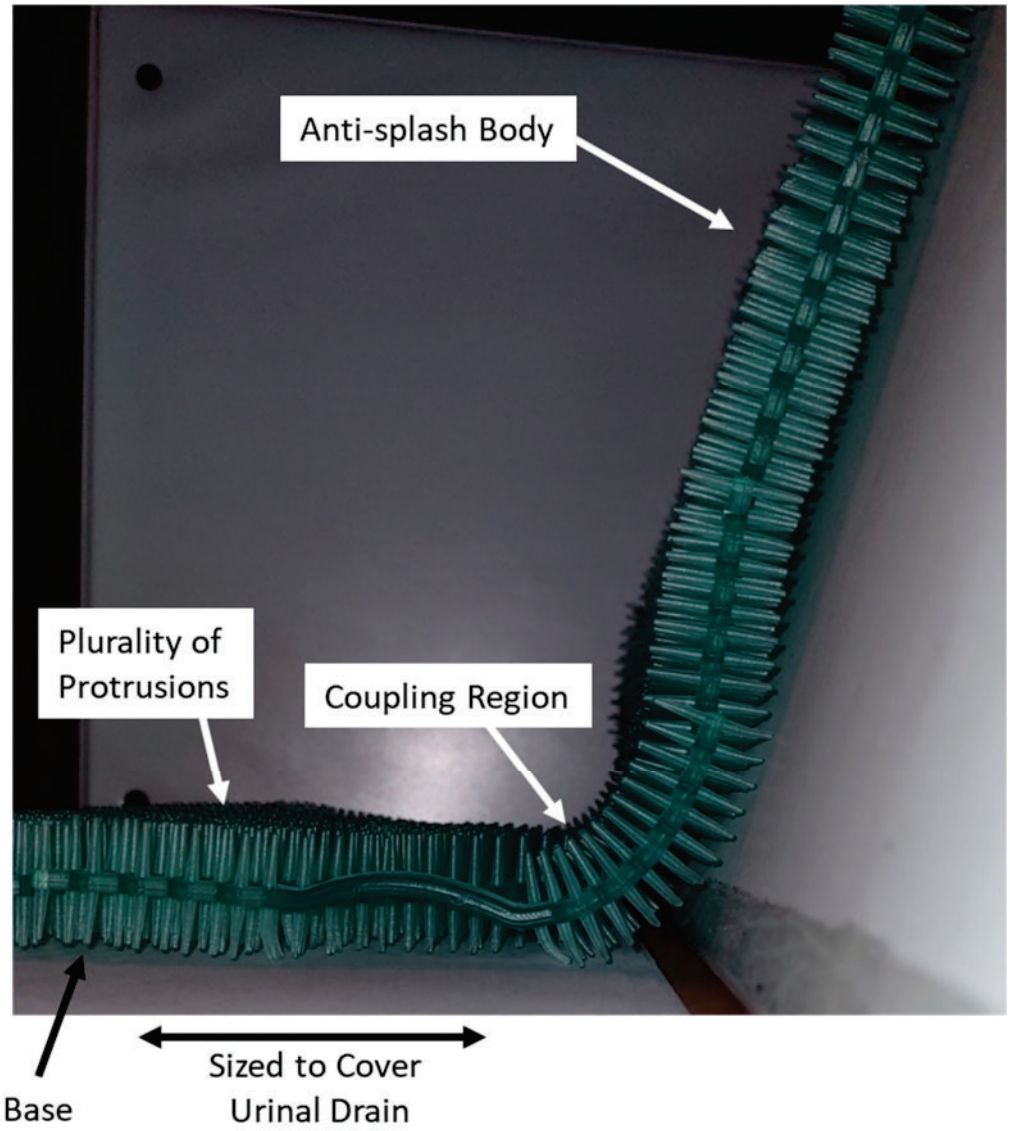

the coupling region is configured [to] allow the base to move between a first position including the base oriented in a direction parallel to the anti-splash body and a second position including the base oriented in a direction substantially perpendicular from the base.	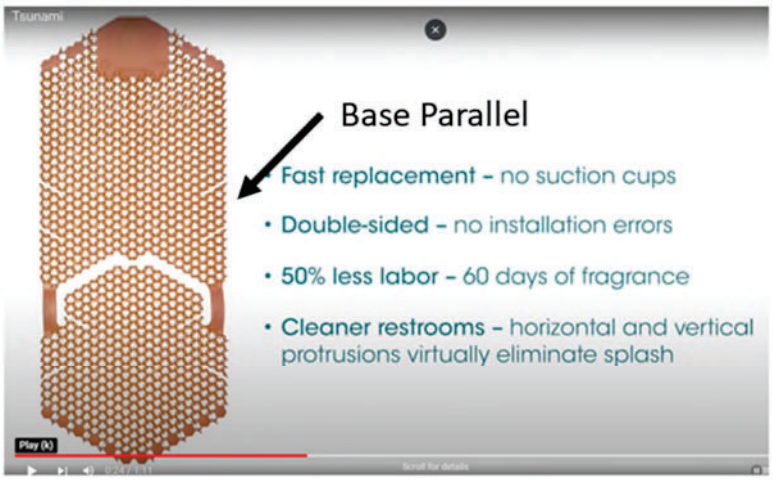 CAPTURE FROM FRESH PRODUCTS VIDEO ON YOUTUBE 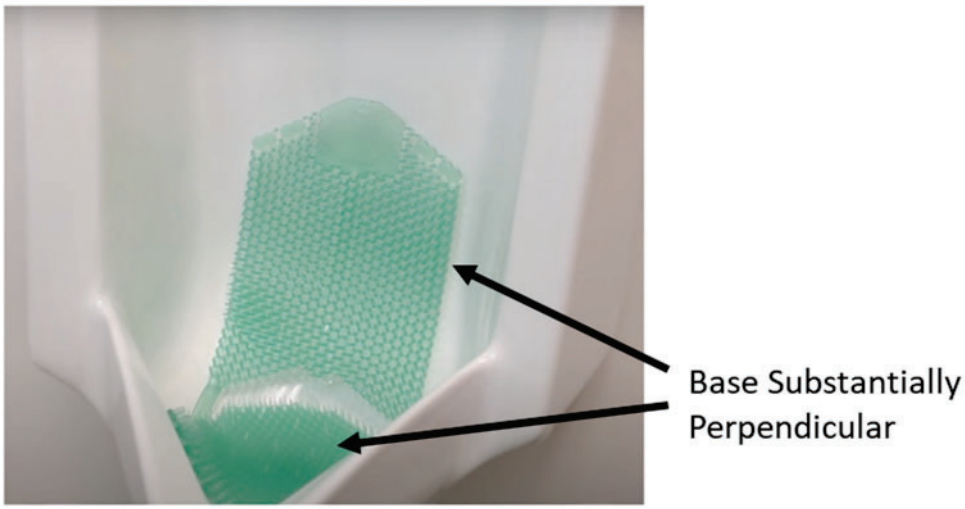 CAPTURE FROM FRESH PRODUCTS VIDEO ON YOUTUBE

November 8, 2023

VIA EMAIL

Alexander Brown, Esq.
CONCEPT LAW GROUP
6400 N. Andrews Avenue, Suite 500
Fort Lauderdale, Florida 33309

Re: Infringement of Fresh Products Intellectual Property/
Our Ref No.: FRESHPR.113IS

Dear Mr. Brown:

Our firm represents Fresh Products, Inc. in intellectual property matters. Your letter of October 26, 2023, has been forwarded to us for response.

Fresh Products respects the valid intellectual property rights of others. It will take us at least until December 4th to perform our diligence and analyze your allegations.

In the meantime, however, we want to make sure that your client has advised you of Fresh Products' intellectual property rights.

Fresh Products has been at the forefront of developing innovative urinal screen technology and products and is a recognized market leader. One of Fresh Products' innovative urinal screens is sold by Fresh Products under the mark WAVE 3D. To protect its investment and technology incorporated in the WAVE 3D urinal screen and other innovations, Fresh Products has secured numerous U.S. and non-U.S. utility patents. Fresh Products has also protected the design aspects of its related innovations through US and non-U.S. Design Patents and has registered aspects of its urinal screen designs as Registered Community Designs (RCD's). With Brexit, these RCD's automatically were registered by the UK as "re-registered designs" (RRD's).

WizKid is well aware of Fresh Products innovative urinal screen product line and its intellectual property portfolio, having previously contracted with Fresh Products to manufacture its SPLASH HOG product which includes a vertical urinal screen and a generally horizontal urinal screen.

The SPLASH HOG product manufactured by Fresh Products incorporated Fresh Products' WAVE 3D innovations. It has now been some years since Fresh Products manufactured the SPLASH HOG product and it has come to our attention that the WizKid SPLASH HOG continues to incorporate Fresh Products patented innovations. Specifically, this is to advise you that the WizKid SPLASH HOG urinal screen is covered by Fresh Products intellectual property rights, including Claim 19 of U.S. utility Patent Number 10, 145,098; Claim 28 of U.S. Patent Number 10,501,924; and Claim 1 of U.S. Patent No. 11,396,745. The WizKid SPLASH HOG product is

also covered by U.S. Design Patent No. D778,411. The foregoing list is merely exemplary and the WizKid SPLASH HOG is covered by other US and non-US intellectual property rights.

This is to put you on official notice that sales of the WizKid SPLASH HOG in the U.S. is an infringement of Fresh Products' intellectual property rights, including, but not limited to the rights itemized above. To avoid any confusion, Fresh Products has not granted any license or other rights to WizKid to the aforementioned intellectual property.

Fresh Products would like to resolve this matter in an amicable business manner, believes that it would be worthwhile to address these issues concurrently.

Nothing in this letter should be construed as a waiver of any rights or remedies of Fresh Products for sale of the WizKid SPLASH HOG urinal screen or any related products.

Very truly yours,

/Edward A. Schlatter/

Edward A. Schlatter

cc: Fresh Products, Inc.

58533622