US 20050253740A1

(19) United States

(12) Patent Application Publication (10) Pub. No.: US 2005/0253740 A1

Marpe et al. (43) Pub. Date: Nov. 17, 2005

(54) METHOD AND APPARATUS FOR BINARIZATION AND ARITHMETIC CODING OF A DATA VALUE

(76) Inventors: **Detlev Marpe**, Berlin (DE); **Heiko Schwarz**, Berlin (DE); **Thomas Wiegand**, Berlin (DE)

Correspondence Address:
GLENN PATENT GROUP
3475 EDISON WAY, SUITE L
MENLO PARK, CA 94025 (US)

(21) Appl. No.: 11/121,529

(22) Filed: May 3, 2005

Related U.S. Application Data

(63) Continuation of application No. 10/622,335, filed on Jul. 17, 2003, now Pat. No. 6,900,748.

Publication Classification

(51) Int. Cl.[7] H03M 7/00

(52) U.S. Cl. 341/50

(57) ABSTRACT

Binarization a data value comprises binarizing the minimum of the data value and a predetermined cut-off value in accordance with a first binarization scheme, in order to yield a primary prefix. If the data value is greater than the cut-off value, binarizing a difference of the data value minus the predetermined cut-off value in accordance with a second binarization scheme to obtain a binary suffix, the first binarization scheme being different from the second binarization scheme, and appending the primary suffix to the primary prefix is performed. A very effective compression of data values may be achieved by using the binarization scheme for preparing the syntax elements for the arithmetic coding, the binarization scheme substantially being a combination of two different binarization schemes, and by using binary arithmetic coding instead of m-ary arithmetic coding for coding the binarized syntax elements.

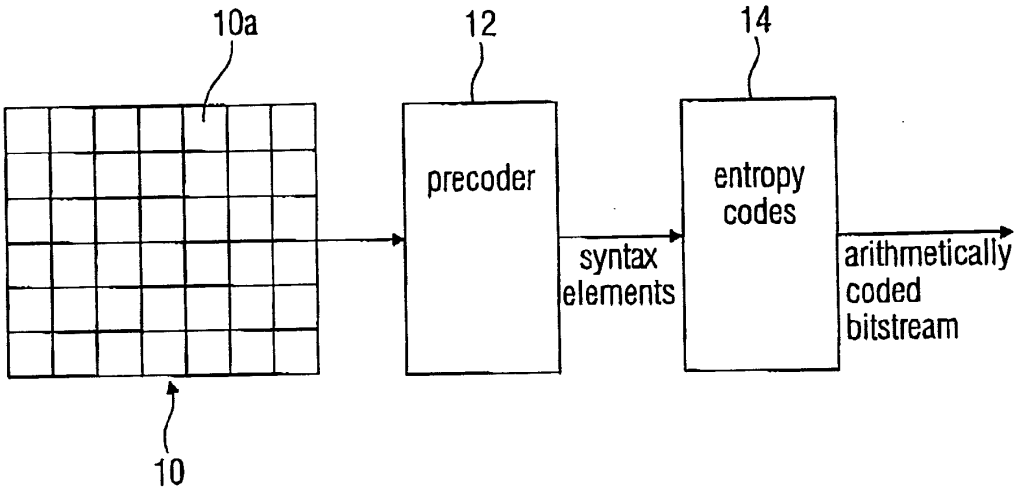

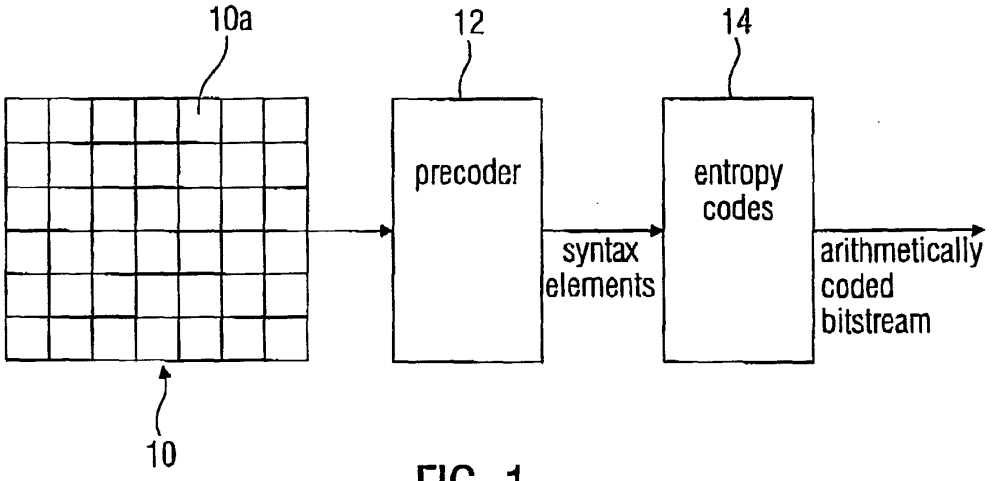
10a
12
14
precoder
entropy codes
syntax elements
arithmetically coded bitstream
10

FIG. 1

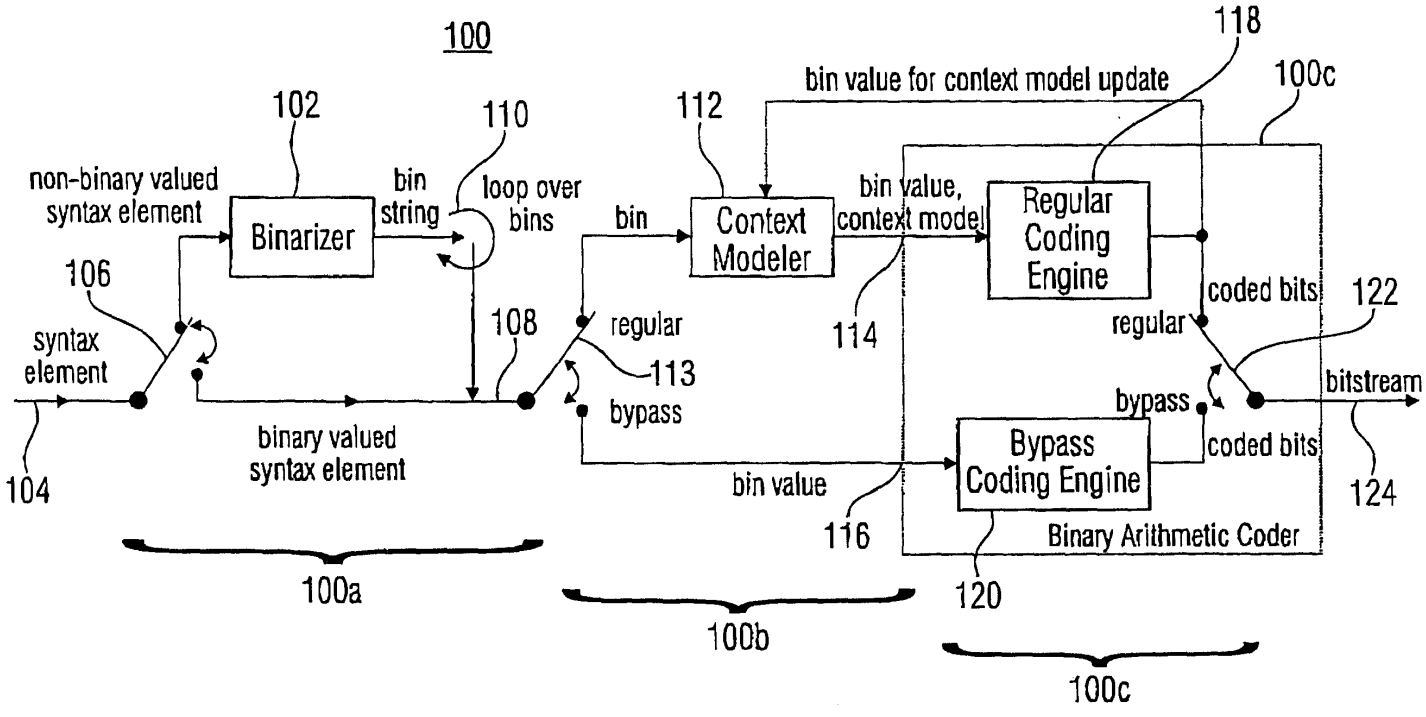
100
102
110
112
118
100c
bin value for context model update
non-binary valued syntax element
Binarizer
bin string
loop over bins
bin
Context Modeler
bin value, context model
Regular Coding Engine
106
syntax element
108
regular
113
bypass
114
coded bits
122
regular
bypass
bitstream
binary valued syntax element
104
bin value
Bypass Coding Engine
coded bits
124
116
Binary Arithmetic Coder
100a
100b
120
100c

FIG. 2

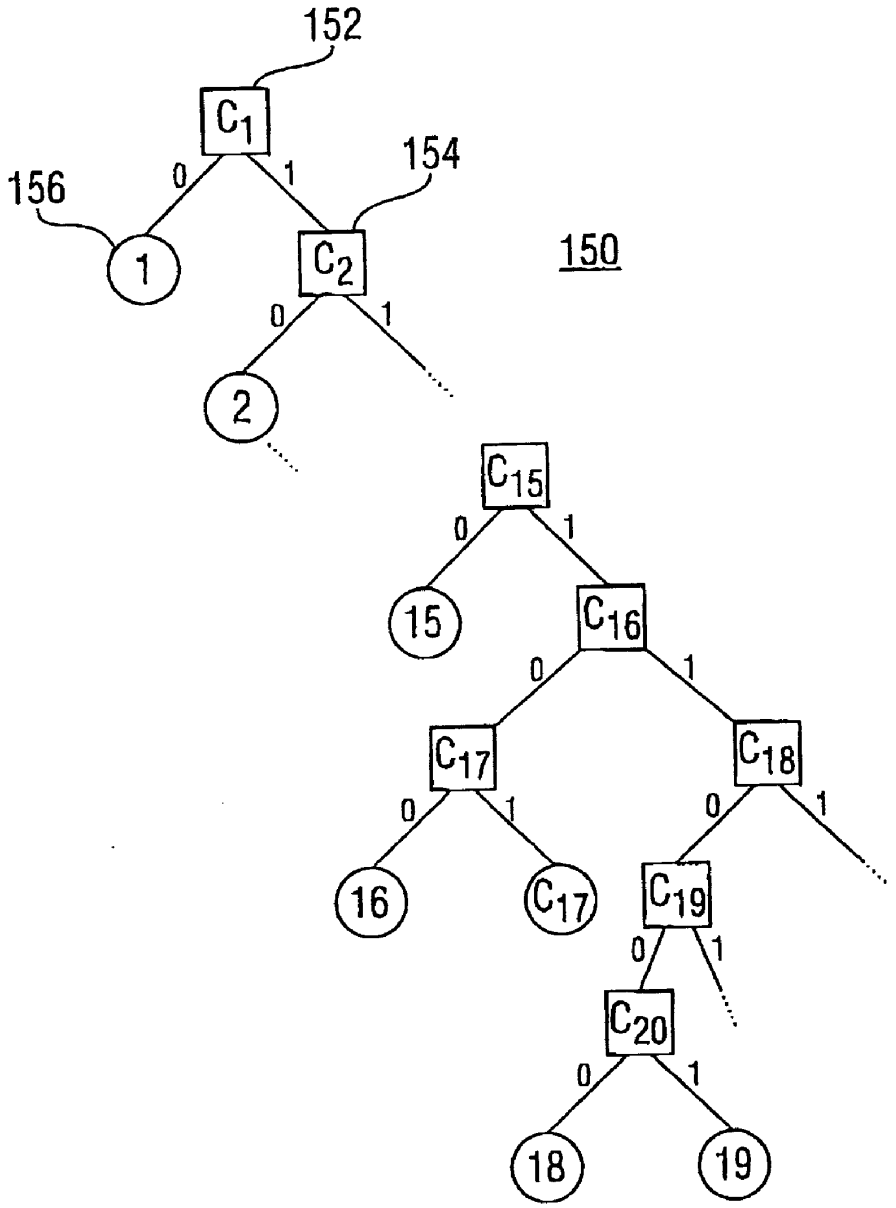

FIG. 3

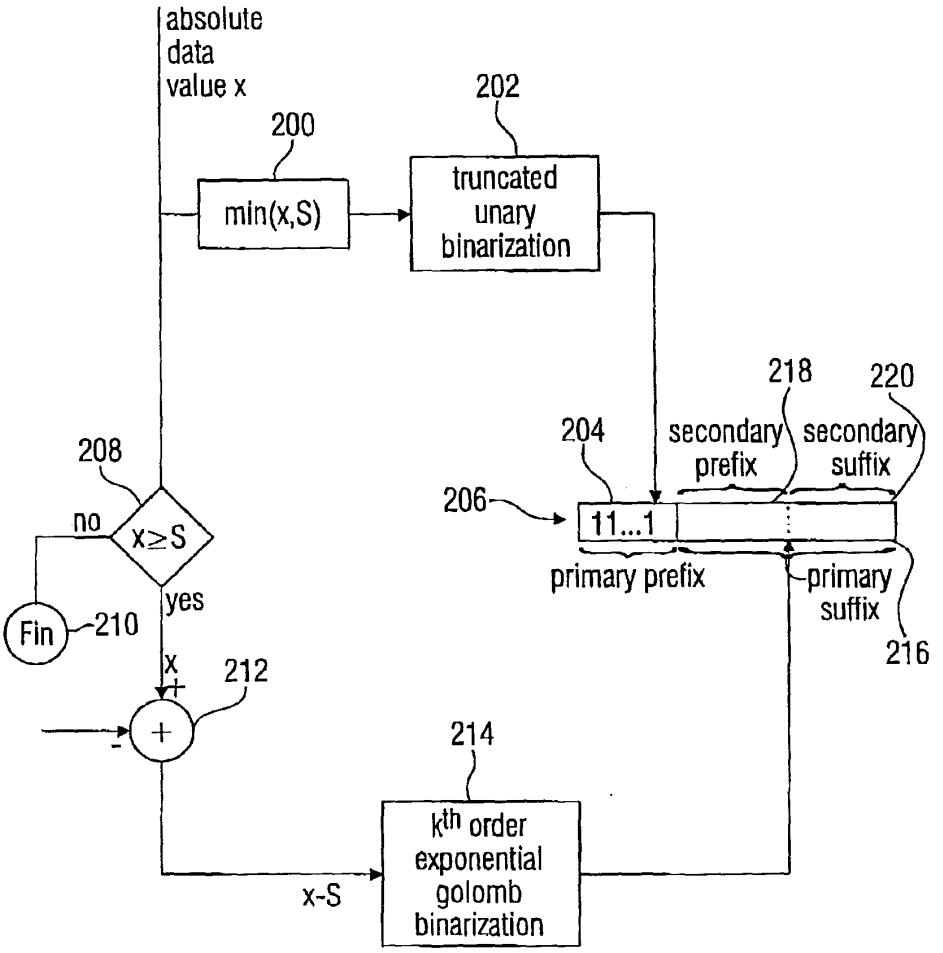
absolute
data
value x
200
min(x,S)
202
truncated
unary
binarization
218
220
204
secondary
prefix
secondary
suffix
208
206
11...1
no
x≥S
yes
primary prefix
primary
suffix
Fin
210
216
x
212
+
-
214
kth order
exponential
golomb
binarization
x-S

FIG. 4

250

252

Abs. value	Bin string																			
	TU prefix														EGO suffix					
1	0																			
2	1	0																		
3	1	1	0																	
4	1	1	1	0																
5	1	1	1	1	0															
...	.	.	.	.	.	.														
...	.	.	.	.	.	.	.	.	.	.	.	.								
13	1	1	1	1	1	1	1	1	1	1	1	1	0							
14	1	1	1	1	1	1	1	1	1	1	1	1	1	0						
15	1	1	1	1	1	1	1	1	1	1	1	1	1	1	0					
16	1	1	1	1	1	1	1	1	1	1	1	1	1	1	1	0	0			
17	1	1	1	1	1	1	1	1	1	1	1	1	1	1	1	0	1			
18	1	1	1	1	1	1	1	1	1	1	1	1	1	1	1	1	0	0	0	
19	1	1	1	1	1	1	1	1	1	1	1	1	1	1	1	1	0	0	1	
20	1	1	1	1	1	1	1	1	1	1	1	1	1	1	1	1	0	1	0	
...	.	.	.	.	.	.	.	.	.	.	.	.	.	.	.	.	.	.	.	.
bin	1	2	3	4	5	6	7	8	9	10	11	12	13	14	15	16	17	18	19	...

258

254 256

FIG. 5

250

252

Abs. value	Bin string														
	TU prefix									EG3 suffix					
1	0 ← 270														
2	1	0													
3	1	1	0												
⋮															
7	1	1	1	1	1	1	1	0							
8	1	1	1	1	1	1	1	1	0						
9	1	1	1	1	1	1	1	1	1	0					
10	1	1	1	1	1	1	1	1	1	0	0	0	1		
11	1	1	1	1	1	1	1	1	1	0	0	1	0		
	⋮									⋮			⋮		
16	1	1	1	1	1	1	1	1	1	0	1	1	1		
17	1	1	1	1	1	1	1	1	1	1	0	0	0	0	0
	254									256					

258

FIG. 6

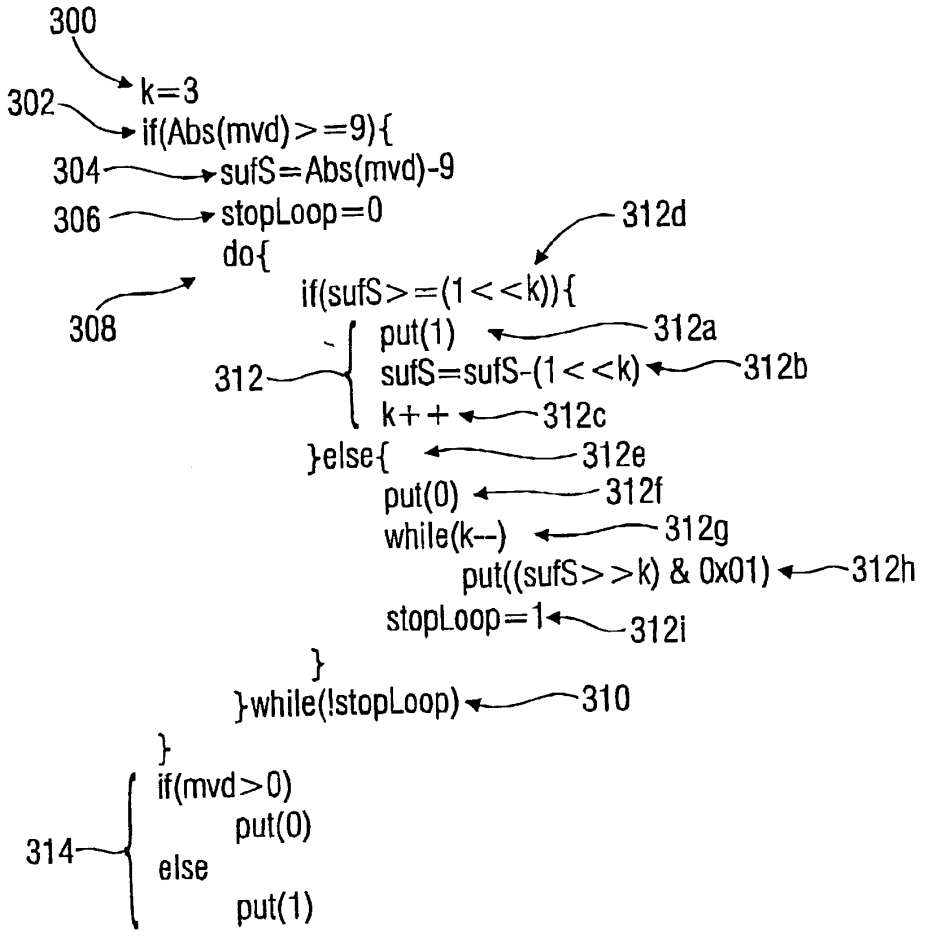
300
k=3
302
if(Abs(mvd)>=9){
304
sufS=Abs(mvd)-9
306
stopLoop=0
312d
do{
308
if(sufS>=(1<<k)){
put(1)
312a
312
sufS=sufS-(1<<k)
312b
k++
312c
}else{
312e
put(0)
312f
while(k--)
312g
put((sufS>>k) & 0x01)
312h
stopLoop=1
312i
}
}while(!stopLoop)
310
}
if(mvd>0)
put(0)
314
else
put(1)

FIG. 7

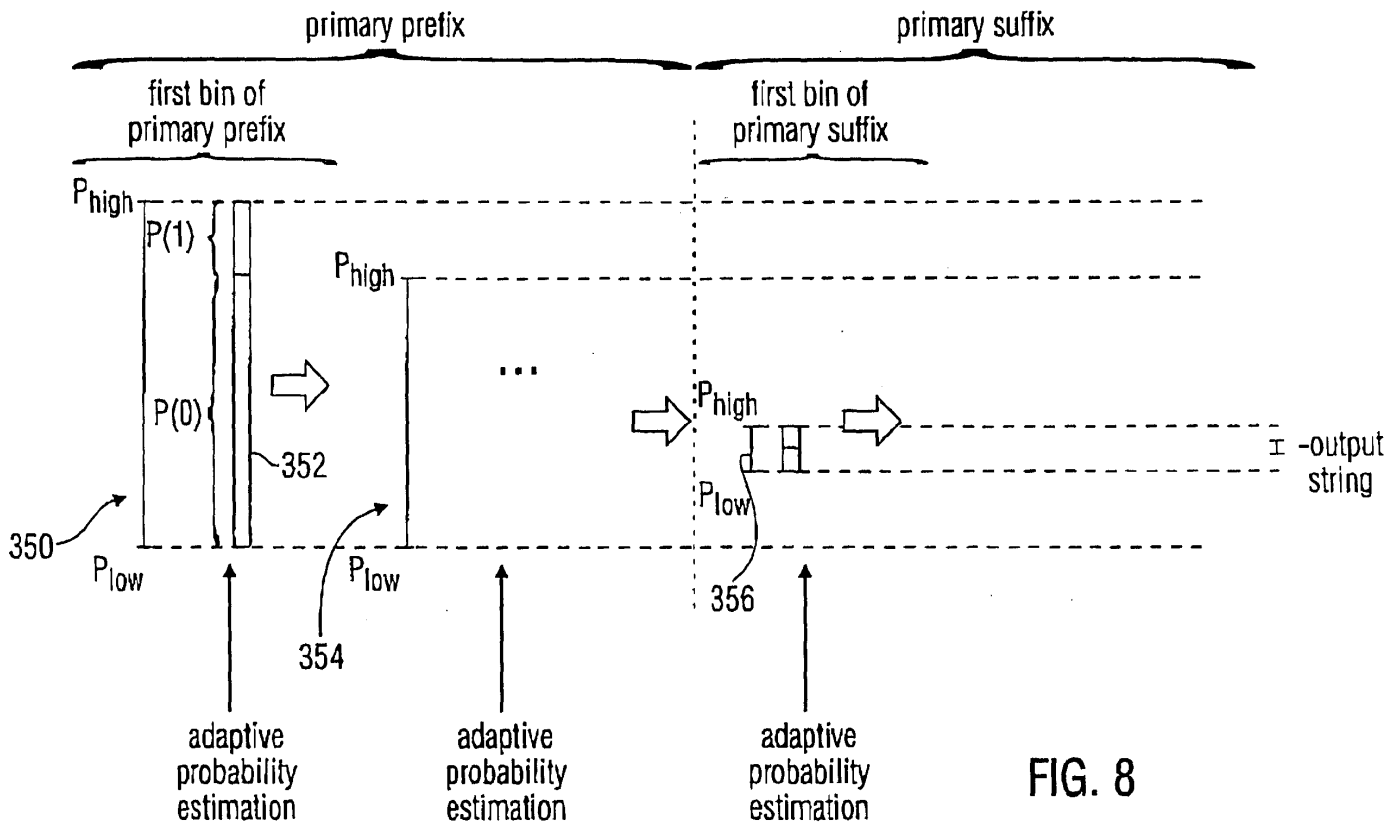
primary prefix
primary suffix
first bin of primary prefix
first bin of primary suffix
P_{high}
P(1)
P(0)
352
350
P_{low}
354
356
-output string
adaptive probability estimation
adaptive probability estimation
adaptive probability estimation

FIG. 8

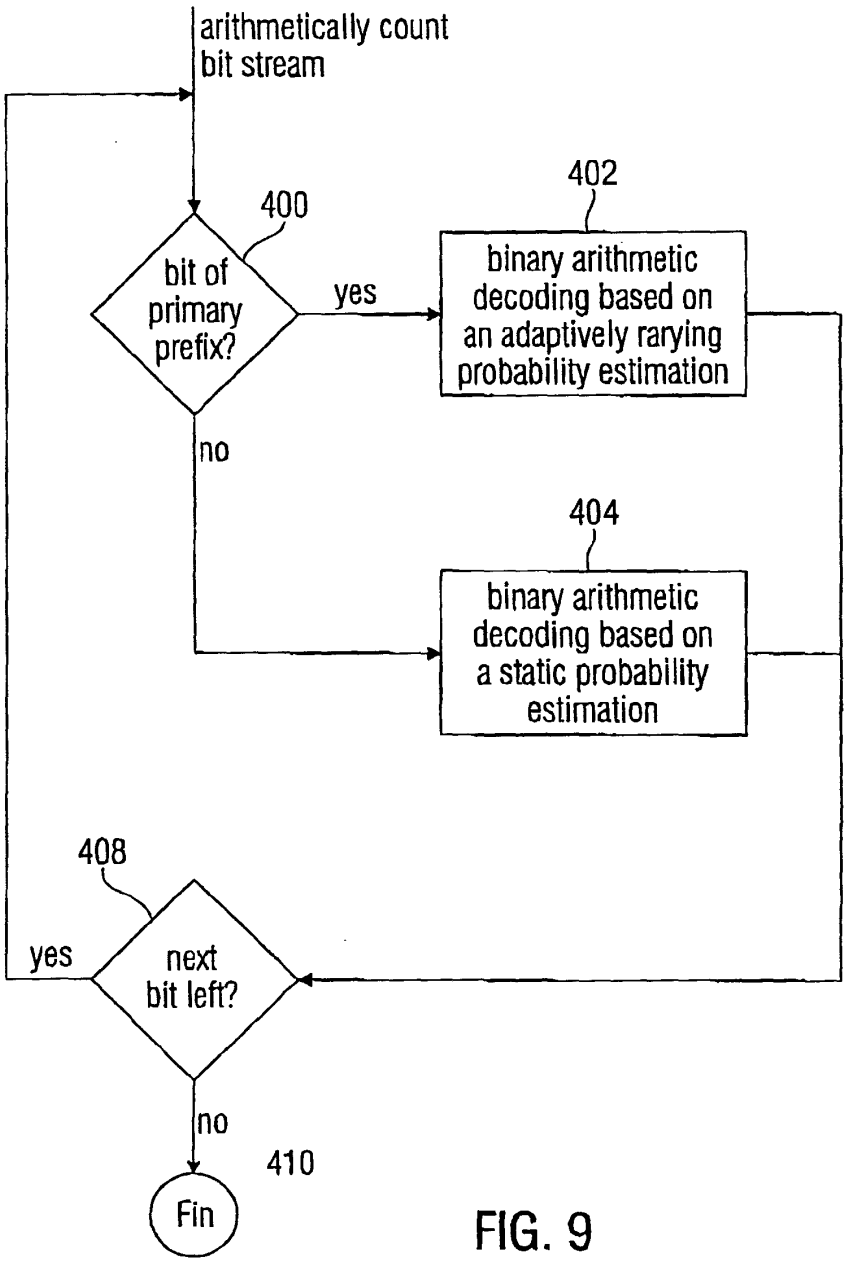
arithmetically count bit stream
400
bit of primary prefix?
yes
no
402
binary arithmetic decoding based on an adaptively rarying probability estimation
404
binary arithmetic decoding based on a static probability estimation
408
next bit left?
yes
no
410
Fin

FIG. 9

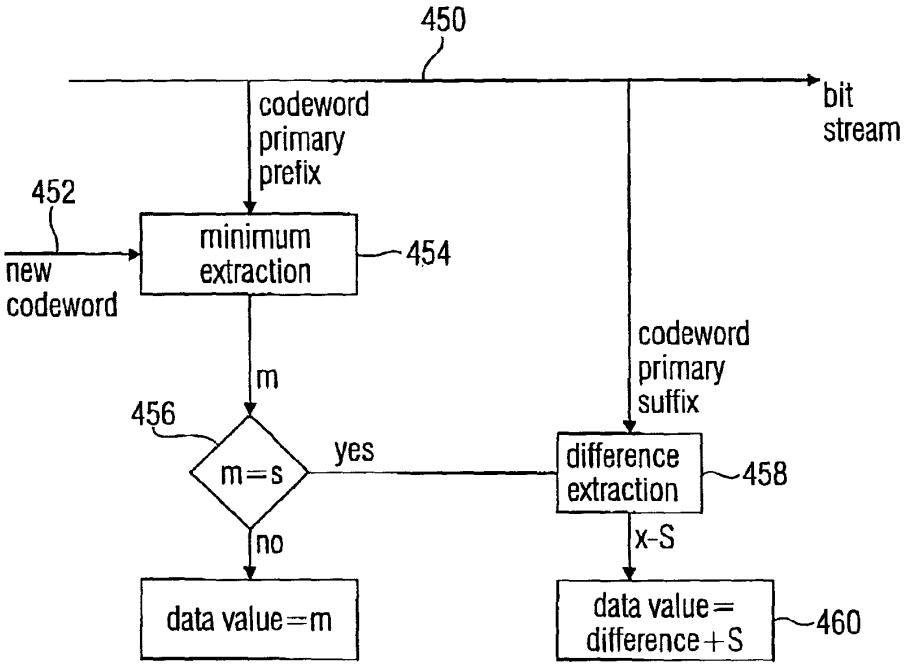
450
bit stream
codeword primary prefix
452
new codeword
minimum extraction
454
m
456
m=s
yes
no
codeword primary suffix
difference extraction
458
x-S
data value=m
data value= difference+S
460

FIG. 10

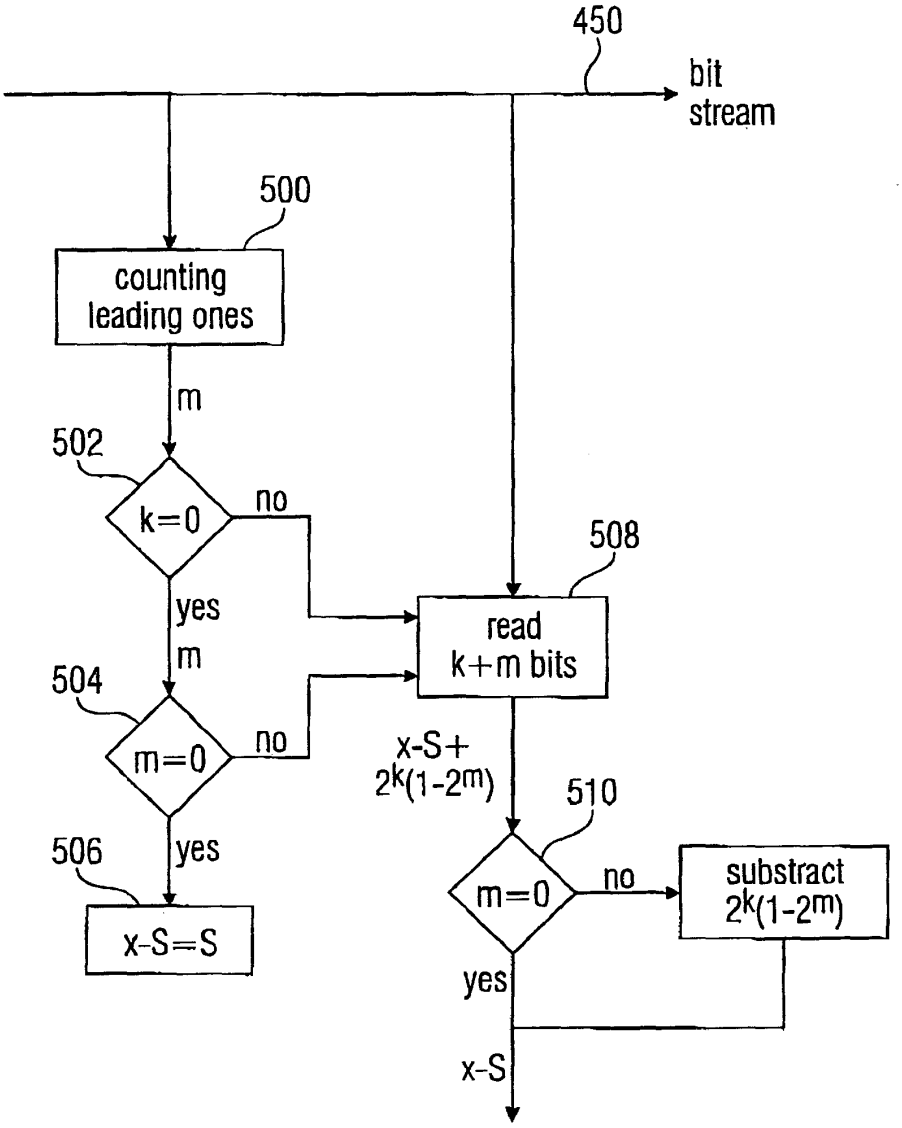
450
bit stream
500
counting leading ones
m
502
k=0
no
yes
m
504
m=0
no
yes
506
x-S=S
508
read k+m bits
x-S+ 2k(1-2m)
510
m=0
no
substract 2k(1-2m)
yes
x-S

FIG. 11

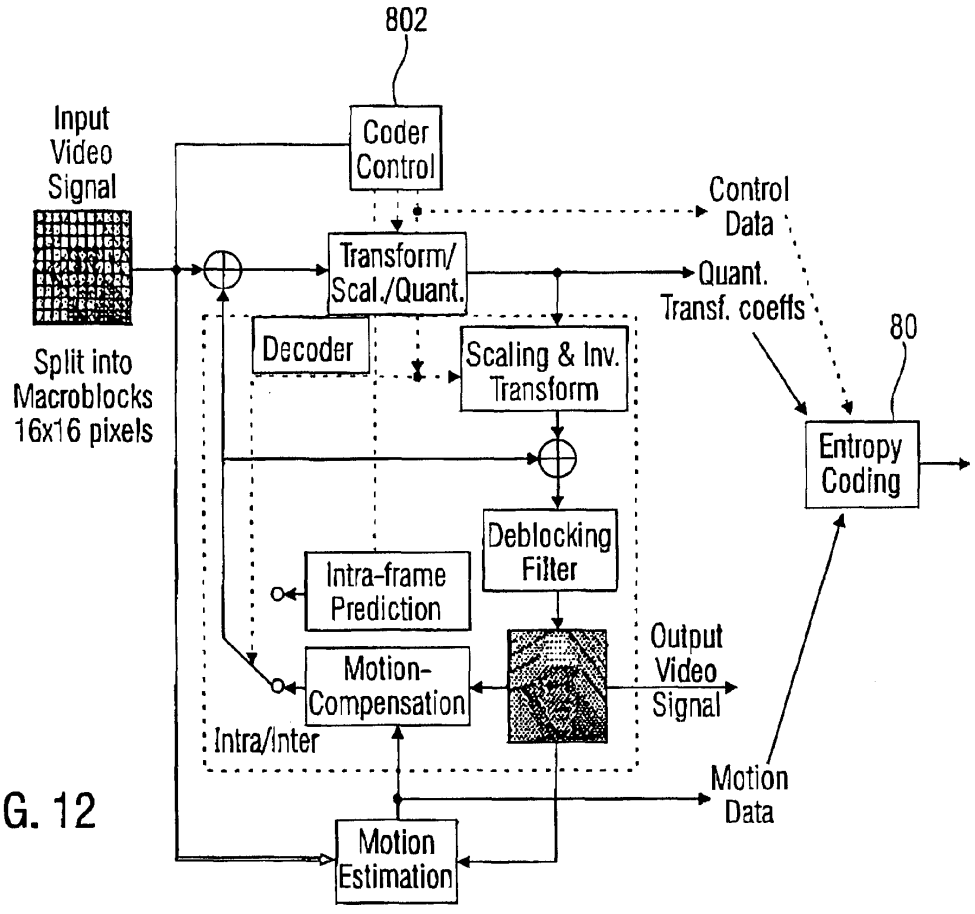
802
Input
Video
Signal
Coder
Control
Control
Data
Transform/
Scal./Quant.
Quant.
Transf. coeffs
80
Split into
Macroblocks
16x16 pixels
Decoder
Scaling & Inv.
Transform
Entropy
Coding
Deblocking
Filter
Intra-frame
Prediction
Output
Video
Signal
Motion-
Compensation
Intra/Inter
Motion
Data
Motion
Estimation

FIG. 12

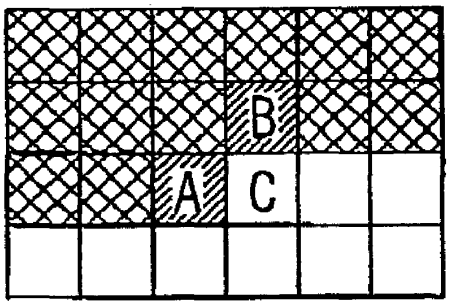

FIG. 13

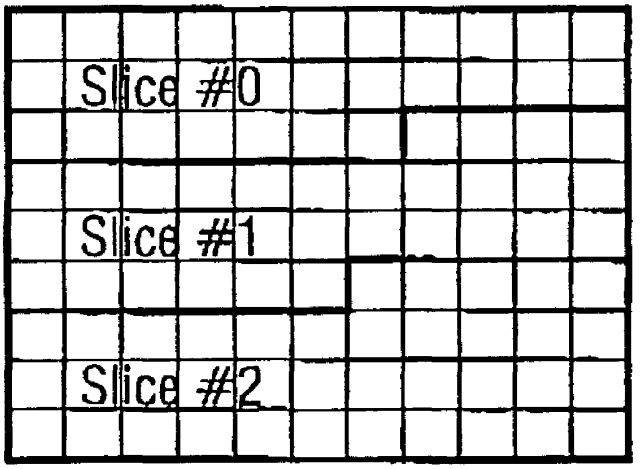

FIG. 14

Q	A	B	C	D	E	F	G	H
I	a	b	c	d				
J	e	f	g	h				
K	i	j	k	l				
L	m	n	o	p				

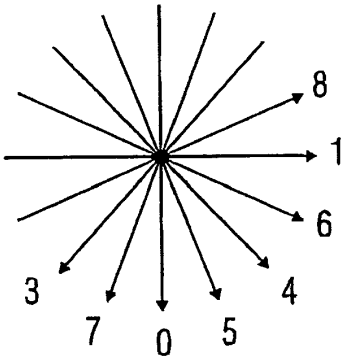

FIG. 15

METHOD AND APPARATUS FOR BINARIZATION AND ARITHMETIC CODING OF A DATA VALUE

CROSS-REFERENCE TO RELATED APPLICATION

[0001] This application is a continuation of U.S. application Ser. No. 10/622,335, filed Jul. 17, 2003.

BACKGROUND OF THE INVENTION

[0002] I. Technical Field of the Invention

[0003] The present invention is related to binarization schemes and coding schemes, in general, and in particular, to binarization and arithmetic coding schemes for use in video coding applications.

[0004] II. Description of the Prior Art

[0005] Entropy coders map an input bit stream of binarizations of data values to an output bit stream, the output bit stream being compressed relative to the input bit stream, i.e., consisting of less bits than the input bit stream. This data compression is achieved by exploiting the redundancy in the information contained in the input bit stream.

[0006] Entropy coding is used in video coding applications. Natural camera-view video signals show non-stationary statistical behavior. The statistics of these signals largely depend on the video content and the acquisition process. Traditional concepts of video coding that rely on mapping from the video signal to a bit stream of variable length-coded syntax elements exploit some of the non-stationary characteristics but certainly not all of it. Moreover, higher-order statistical dependencies on a syntax element level are mostly neglected in existing video coding schemes. Designing an entropy coding scheme for video coder by taking into consideration these typical observed statistical properties, however, offer significant improvements in coding efficiency.

[0007] Entropy coding in today's hybrid block-based video coding standards such as MPEG-2 and MPEG-4 is generally based on fixed tables of variable length codes (VLC). For coding the residual data in these video coding standards, a block of transform coefficient levels is first mapped into a one-dimensional list using an inverse scanning pattern. This list of transform coefficient levels is then coded using a combination of run-length and variable length coding. The set of fixed VLC tables does not allow an adaptation to the actual symbol statistics, which may vary over space and time as well as for different source material and coding conditions. Finally, since there is a fixed assignment of VLC tables and syntax elements, existing inter-symbol redundancies cannot be exploited within these coding schemes.

[0008] It is known, that this deficiency of Huffman codes can be resolved by arithmetic codes. In arithmetic codes, each symbol is associated with a respective probability value, the probability values for all symbols defining a probability estimation. A code word is coded in an arithmetic code bit stream by dividing an actual probability interval on the basis of the probability estimation in several sub-intervals, each sub-interval being associated with a possible symbol, and reducing the actual probability interval to the sub-interval associated with the symbol of data value to be coded. The arithmetic code defines the resulting interval limits or some probability value inside the resulting probability interval.

[0009] As may be clear from the above, the compression effectiveness of an arithmetic coder strongly depends on the probability estimation and the symbols, which the probability estimation is defined on. The symbols may be the data values in the input bit stream or the syntax elements in the input bit stream. In this case, the binarization of the data values is not critical.

SUMMARY OF THE INVENTION

[0010] It is the object of the present invention to provide a binarization scheme and a coding scheme, which enable effective compression of data values, such as transform coefficient level values or components of motion vector differences in video signals, with moderate computational overhead.

[0011] In accordance with the first aspect of the present invention, this object is achieved by a method for decoding a coded bit stream which represents a binarized representation of the data value, the binarized representation of the data value being a codeword having a primary prefix, which is a binarization of the minimum of the data value and a predetermined cut-off value in accordance with a first binarization scheme and, if the data value is greater than the predetermined cut-off value, a primary suffix appended to the primary prefix, the primary suffix being a binarization of the difference of the data value minus the predetermined cut-off value in accordance with a second binarization scheme, the method having the following steps: for each bit in the codeword, if the bit of the codeword is part of the primary prefix, determining the bit by binary arithmetically decoding the coded bit stream by means of a adaptively varying bit value probability estimation; and if the bit of the codeword is part of the primary suffix, determining the bit by binary arithmetically decoding the bit by means of a static bit value probability estimation, thereby obtaining the codeword representing the data value.

[0012] In accordance with the second aspect of the present invention, this object is achieved by an apparatus for decoding a coded bit stream which represents a binarized representation of the data value, the binarized representation of the data value being a codeword having a primary prefix, which is a binarization of the minimum of the data value and a predetermined cut-off value in accordance with a first binarization scheme and, if the data value is greater than the predetermined cut-off value, a primary suffix appended to the primary prefix, the primary suffix being a binarization of the difference of the data value minus the predetermined cut-off value in accordance with a second binarization scheme, having: means for, for each bit in the codeword, if the bit of the codeword is part of the primary prefix, determining the bit by binary arithmetically decoding the coded bit stream by means of a adaptively varying bit value probability estimation; and if the bit of the codeword is part of the primary suffix, determining the bit by binary arithmetically decoding the bit by means of a static bit value probability estimation, thereby obtaining the codeword representing the data value.

[0013] In accordance with the third aspect of the present invention, this object is achieved by a computer program

having instructions for performing, when running on a computer, a method for decoding a coded bit stream which represents a binarized representation of the data value, the binarized representation of the data value being a codeword having a primary prefix, which is a binarization of the minimum of the data value and a predetermined cut-off value in accordance with a first binarization scheme and, if the data value is greater than the predetermined cut-off value, a primary suffix appended to the primary prefix, the primary suffix being a binarization of the difference of the data value minus the predetermined cut-off value in accordance with a second binarization scheme, the method having the following steps: for each bit in the codeword, if the bit of the codeword is part of the primary prefix, determining the bit by binary arithmetically decoding the coded bit stream by means of a adaptively varying bit value probability estimation; and if the bit of the codeword is part of the primary suffix, determining the bit by binary arithmetically decoding the bit by means of a static bit value probability estimation, thereby obtaining the codeword representing the data value.

[0014] The present invention is based on the finding that a very effective compression of data values, and, in particular, of components of motion vector differences or transform coefficient level values, forming syntax elements in a video signal, may be achieved by using a binarization scheme for preparing the syntax elements for the arithmetic coding, the binarization scheme substantially being a combination of two different binarization schemes, and by using binary arithmetic coding instead of m-ary arithmetic coding for coding the binarized syntax elements.

[0015] The advantage of using a binary arithmetic coding engine instead of a m-ary arithmetic coder operating on an original m-ary source alphabet is that the complexity of the probability estimation is reduced since the determination of the probabilities for the two possible bit values can be defined by just one probability estimation value. Adaptive m-ary arithmetic coding, for m>2, would be in general a computationally complex operation requiring at least two multiplications for each symbol to encode as well as a number of fairly complex operations to perform the update of the probability estimation.

[0016] Furthermore, binary arithmetic coding enables context modeling on a sub-symbol level. For specific bins, i.e., the nodes in a binarization code tree of the binarization scheme by which the data value to be coded is binarized, conditional probabilities can be used. These specific bins will be, in general, the most frequently observed bins. Other, usually less frequently observed bins, can be treated using a joint, typically zero-order probability model.

[0017] The use of the inventive binarization scheme enables, in connection with binary arithmetic coding, an effective way of adapting the binarization representation of the data value to the probability distribution of the data values. A suitably selected cut-off value may lead to the least probable data values to be binarized into code words having equally probable bit values, whereas the most probable data values may be binarized into code words leading to a very effective arithmetic coding bit stream when using adaptive context modeling. Thus, coding based on a static probability estimation may be employed for the second binarization scheme suffix of the code word, whereas adaptive binary arithmetic coding is effectively applied to bits of the first binarization scheme primary prefix of the code word.

[0018] In accordance with a specific embodiment of the present invention, a concatenation of a truncated unary binarization scheme and a kth order exponential Golomb binarization scheme is used. This concatenated scheme, which is referred to as unary/k^{th} order Exp-Golomb (UEGk) binarization, is applied to motion vector differences and absolute values of transform coefficient levels. The design of these concatenated binarization schemes is motivated by the following observations. First, the unary code is the simplest prefix-free code in terms of implementation cost. Secondly, it permits a fast adaptation of the individual symbol probabilities in a subsequent context modeling stage, since the arrangement of the nodes in the corresponding tree is typically such that with increasing distance of the internal nodes from the root node the corresponding binary probabilities are less skewed. These observations are accurate for small values of the absolute motion vector differences and transform coefficient levels. For larger values, there is not much use of an adaptive modeling having led to the idea of concatenating an adapted truncated unary tree as a prefix and a static Exp-Golomb code tree as a suffix. Typically, for larger values, the EGk suffix part represents already a fairly good fit to the observed probability distribution, as already mentioned above.

SHORT DESCRIPTION OF THE DRAWINGS

[0019] Preferred embodiments of the present invention are described in more detail below with respect to the figures.

[0020] **FIG. 1** shows a high-level block diagram of a coding environment in which the present invention may be employed;

[0021] **FIG. 2** shows a block diagram of the part of the coding environment of **FIG. 1**, in which the binarization and binary arithmetic coding takes place, in accordance with an embodiment of the present invention;

[0022] **FIG. 3 a** part of the binarization coding tree related to the binarization scheme **FIG. 5**;

[0023] **FIG. 4 a** schematic diagram illustrating the binarization of an absolute data value in accordance with an embodiment of the present invention;

[0024] **FIG. 5 a** table showing bin strings into which an absolute value is binarized in accordance with a further embodiment of the present invention;

[0025] **FIG. 6 a** table showing bin strings into which an absolute value is binarized in accordance with a further embodiment of the present invention;

[0026] **FIG. 7** shows a pseudo-C code for performing a binarization in accordance with a further embodiment of the present invention;

[0027] **FIG. 8 a** schematic diagram illustrating binary arithmetic coding in accordance with an embodiment of the present invention;

[0028] **FIG. 9** shows a schematic diagram illustrating the decoding of an arithmetically coded bit stream into a data value in accordance with an embodiment of the present invention;

[0029] **FIG. 10** shows a schematic diagram illustrating the recovering of a data value from a binarization of the data value in accordance with an embodiment of the present invention;

[0030] **FIG. 11** shows a schematic diagram illustrating the extraction with regard to the suffix part in the process of **FIG. 10**.

[0031] **FIG. 12** shows a basic coding structure for the emerging H.264/AVC video encoder for a macro block;

[0032] **FIG. 13** illustrates a context template consisting of two neighboring syntax elements A and B to the left and on top of the current syntax element C;

[0033] **FIG. 14** shows an illustration of the subdivision of a picture into slices; and

[0034] **FIG. 15** shows, to the left, intra_4×4 prediction conducted for samples a-p of a block using samples A_Q, and to the right, "prediction directions for intra_4×4 prediction.

DETAILED DESCRIPTION OF A PREFERRED EMBODIMENT OF THE PRESENT INVENTION

[0035] The present invention is described in the following with respect to video coding, although the present invention may also be used advantageously in other applications, such as audio coding, compressed simulation data or the like.

[0036] **FIG. 1** shows a general view of an video coder environment to which the present invention could be applied. A picture **10** is fed to a video precoder **12**. The video precoder treats the picture **10** in units of so called macro blocks **10***a*. On each macro block a transformation into transformation coefficients is performed followed by a quantization into transform coefficient levels. Moreover, intra-frame prediction or motion-compensation is used in order not to perform the aforementioned steps directly on the pixel data but on the differences of same to predicted pixel values, thereby achieving small values which are more easily compressed.

[0037] The macroblocks into which the picture **10** is partitioned are grouped into several slices. For each slice a number of syntax elements are generated which form a coded version of the macroblocks of the slice. These syntax elements are dividable into two categories. The first category contains the elements related to macroblock type, sub-macroblock type and information of prediction modes both of spatial and of temporal types as well as slice-based and macroblock-based control information, such as components of motion vector differences, which are prediction residuals. In the second category, all residual data elements, i.e. all syntax elements related to the coding of transform coefficients are combined, such as a significance map indicating the locations of all significant coefficients inside a block of quantized transform coefficient, and the values of the significant coefficients which are indicated in units of levels corresponding to the quantization steps.

[0038] The precoder **12** transfers the syntax elements to a final coder stage **14** which is a entropy coder and explained in more detail with respect to **FIG. 2**. Each syntax element is a data value having a certain meaning in the video signal bit stream that is passed to the entropy coder. The entropy coder **14** outputs a final compressed video bit stream.

[0039] **FIG. 2** shows the arrangement for coding the syntax elements into the final arithmetic code bit stream, the arrangement generally indicated by reference number **100**. The coding arrangement **100** is divided into three stages **100***a*, **100***b*, and **100***c*.

[0040] The first stage **10***a* is the binarization stage and comprises a binarizer **102**. An input of the binarizer **102** is connected to an input **104** of stage **100***a* via a switch **106**. At the same time, input **104** forms the input of coding arrangement **100**. The output of binarizer **102** is connected to an output **108** of stage **10***a*, which, at the same time, forms the input of stage **100***b*. The switch **106** is able to pass syntax elements arriving at input **104** to either binarizer **102** or binarization stage output **108**, thereby bypassing binarizer **102**.

[0041] The function of switch **106** is to directly pass the actual syntax element at input **104** to the binarization stage output **108** if the syntax element is already in a wanted binarized form. For the following discussion, it is assumed that the syntax element is not in the correct binarization form and therefore, syntax elements are generally thought to be non-binary valued syntax elements. The non-binary valued syntax elements are passed via switch **106** to binarizer **102**. Binarizer **102** maps the non-binary valued syntax elements to a code word, or a so called bin string, in accordance with a binarization scheme embodiments of which are described below with respect to the following figures. The meaning of bin will be described in more detail below with respect to **FIG. 3**.

[0042] The code words output by binarizer **102** may not be passed directly to binarization stage output **108** but controllably passed to output **108** by a bin loop over means **110** arranged between the output of binarizer **102** and output **108** in order to merge the bin strings output by binarizer **102** and the already binary valued syntax elements bypassing binarizer **102** to a single bit stream at binarization stage output **108**.

[0043] As is described in more detail below, the binarization stage **108** is for transferring the syntax elements into a suitable binarized representation, which is adapted to the probability distribution of the syntax elements and thereby enabling very efficient binary arithmetic coding of these binarized syntax elements by applying context modeling, i.e., varying the bit value probability estimation, with respect to only a small part of the bits, as will be described in more detail below.

[0044] Stage **100***b* is a context modelling stage and comprises a context modeler **112** as well as a switch **110**. The context modeler **112** comprises an input, an output and an optional feed-back input. The input of context modeler **112** is connected to the binarization stage output **108** via switch **110**. The output of context modeler **112** is connected to a regular coding input terminal **114** of stage **100***c*. The function of switch **113** is to pass the bits or bins of the bin string at binarization stage output **108** to either the context modeler **112** or to a bypass coding input terminal **116** of stage **100***c*, thereby bypassing context modeler **112**.

[0045] In order to ease the understanding of the preferred embodiments of the present invention, in the following only those parts of the bit stream at binarization stage output **108** are discussed, which correspond to bin strings created from

absolute values of transform coefficient levels or motion vector differences. Motion vectors are 2-dimensional vectors used for interprediction that provide an off-set from the coordinates in the decoded picture to the coordinates in a reference picture. The motion vector difference represents the prediction error at quarter-sample accuracy. Nevertheless, the embodiments described herein with respect to the figures could also be applied to other syntax elements.

[**0046**] When receiving the bin string or codeword of a component of a motion vector difference or a transform coefficient level, it is the function of switch **113** to direct the bits of the codeword to either the context modeler **112** or the bypass input terminal **116** depending on to whether the bit belongs to a primary prefix part or a primary suffix part of the code word, as will be described in more detail below.

[**0047**] The context modeler **112** adapts an actual bit or bin value probability distribution estimation in accordance with a predetermined context model type which is associated with that bit or bin. The estimation adaptation or estimation update is based on past or prior bits values which the context modeler **112** may receive at the feedback input from stage **10***c* or may temporarily store. The context model type defines which of the past bits or bins influence the estimation adaptation, such as the bins of a neighboring pixel syntax element or the bin before the actual bin. The context modeler **12** passes the bits further to arithmetic coding stage **10***c* together with the new adaptively varied bit value probability distribution estimation, whereby the context modeler **112** drives the arithmetic coding stage **100***c* to generate a sequence of bits as a coded representation of the syntax elements according to the adaptive bit value probability distribution estimation.

[**0048**] It is clear from the above, that the probability estimation determines the code and its efficiency in the first place, and that it is of paramount importance to have an adequate model that exploits the statistical dependencies of the syntax elements to a large degree and that this probability estimation or context model is kept up-to-date during encoding. However, there are significant model costs involved by additively estimating higher order conditional probabilities. Therefore, the binarization schemes of the embodiments described below are adapted to the statistics of the syntax elements such that context modeling leads to a efficient compression ratio even if context modeling is performed merely with respect to certain bits or bins of the binarized syntax elements at binarization stage output **108**. With respect to the other bits, it is possible to use a static probability estimation and therefore reduce significantly the model costs, whereas the compression efficiency is affected merely to a moderate extent.

[**0049**] The third stage **100***c* of coding arrangement **100** is the arithmetic coding stage. It comprises a regular coding engine **118**, a bypass coding engine **120**, and a switch **122**. The regular coding engine **118** comprises an input and an output terminal. The input terminal of regular coding engine **118** is connected to the regular coding input terminal **114**. The regular coding engine **118** binary arithmetically codes the bin values passed from context modeler **112** by use of the context model also passed from context modeler **112** and outputs coded bits. Further, the regular coding engine **118** eventually passes bin values for context model updates to the feedback input of context modeler **112**.

[**0050**] The bypass coding engine **112** has also an input and an output terminal, the input terminal being connected to the bypass coding input terminal **116**. The bypass coding engine **120** is for binary arithmetically coding the bin values passed directly from binarization stage output **108** via switch **113** by use of a static predetermined probability distribution estimation and also outputs coded bits.

[**0051**] The coded bits output from regular coding engine **118** and bypass coding engine **120** are merged to a single bit stream at an output **124** of coding arrangement **100** by switch **122**, the bit stream representing a binary arithmetic coded bit stream of the syntax elements as input in input terminal **104**. Thus, regular coding engine **118** and bypass coding **120** cooperate in order to bit wise perform arithmetical coding based on either an adaptive or a static probability distribution model.

[**0052**] In order to illustrate the relation between "bits" of the codewords to which binarizer **102** maps the syntax elements, on the one hand, and "bins", on the other hand, **FIG. 3** shows a binary code tree corresponding to the binarization scheme later described with respect to **FIG. 5**. The code tree, generally indicated with reference number **150** comprises a root node **152** and several internal nodes **154**, the root node **152** and the internal nodes **154** being designated by C_i, with the index i being an integer associated with a corresponding node. Each of these nodes defines a conditional branch or binary decision called a "bin", with a left branch corresponding to the bin value 0 and the right branch corresponding to the bin value 1.

[**0053**] The tree **150** also includes terminal nodes **156**. The numbers assigned to the terminal nodes **156** in **FIG. 3** correspond to the data value of the syntax element, which, in accordance with the binarization scheme of **FIG. 5**, corresponds to the codeword or bit string resulting form the bits or bin values when following the path from root node **152** to the respective terminal node **156**. For example, the data value 17 corresponds, as shown in **FIG. 5**, to the codeword bit string 11111111111111101. The path comprises root node **152** and the internal nodes **154** C_2 to C_{17}. Each node **152** or **154** may be seen as a binary decision called "bin". The concatenation of the binary decision for traversing the tree **150** from the root node **152** to the respective terminal node **156** represents the "bin string" of the corresponding symbol value or syntax element value.

[**0054**] Each binary decision has an actual probability distribution indicating the probability as to whether the decision yields a binary zero (left branch in **FIG. 3**) and a binary one (right branch in **FIG. 3**). In other words, the actual probability distribution of a binary decision defines the probability that the syntax element path takes the zero or one branch at this binary decision. Accordingly, the actual probability for the syntax element to assume a certain data value is equal to the product of the respective probabilities at the nodes arranged along the path from root node **152** to the respective terminal node **156**.

[**0055**] For binary arithmetic coding, each binary decision or node **152**, **154** of tree **150**, i.e. each bin, is associated with a bit value probability estimation or a context model, i.e. C_i. As is described in more detail below, not all of the nodes or bins is associated with adaptive probability estimation models but may be associated with a static probability estimation, thereby reducing the context modeling overhead, i.e.

the management for adapting the estimation according to past bins in order to increase the compression ratio.

[0056] Next, with respect to **FIG. 4**, an embodiment of a binarization scheme in accordance with an embodiment of the present invention is described. **FIG. 4** shows schematically the steps binarizer **102** performs on the non-binary valued syntax elements. In particular, **FIG. 4** is an embodiment for binarizing the absolute values of transform coefficient levels, i.e., an integer quantity representing the value associated with a particular two-dimensional frequency index in the decoding process prior to scaling for computation of a transform coefficient value.

[0057] The binarization scheme of **FIG. 4** is a concatenation of a truncated unary binarization scheme, on the one hand, and a kth order Exp-Golomb binarization scheme, on the other hand. A truncated unary binarization scheme is based a unary binarization scheme. In accordance with an unary binarization scheme, for each unsigned integer valued symbol x greater than or equal to zero the unary codeword to which x is mapped consists of x "1" bits plus a terminating "0" bit. Differing from the unary binarization scheme, a truncated unary (TU) code is only defined for x with $0 \leqq x \leqq S$, where for $x<S$ the code is given by the unary code, whereas for $x=S$ the terminating "0" bit is neglected such that the TU code of $x=S$ is given by a codeword consisting of x "1" bits only, i.e. without a terminating bit of "0". In accordance with the exponential Golomb binarization scheme, generally, a data value x is mapped to a codeword consisting of a prefix and a suffix. Mere precisely, in accordance with the kth order Exp-Golomb binarization scheme, data values are mapped to code words having at least a prefix and, depending on the data value, a suffix. The prefix part of the EGk code word consists of a unary code corresponding to the value 1(x), with $1(x)=\lfloor \log_2 (x/2^k+1 \rfloor$, k indicating the order of the code and $\lfloor r \rfloor$ being maximum integer smaller than or equal to real value r. The EGk suffix part is computed as the binary representation of $x+2^k(1-2^{l(x)})$ using $k+l(x)$ significant bits.

[0058] As can be seen from **FIG. 4**, the absolute data value x to be binarized is compared to the cut-off value S at **200** to determine the minimum of x and S. S is the cut-off value defining for which absolute data values x the truncated unary code is to be used exclusively, i.e. without using the Golomb binarization scheme for the residual. In other words, for all absolute data values x less than the cut-off values S the truncated unary binarization is used exclusively in order to map the absolute data value x to a codeword, the codeword accordingly merely consisting of a primary prefix. If the absolute data value x is greater than or equal to S, a primary suffix is appended to the primary prefix, the primary suffix being created in accordance with a zero order Exp-Golomb binarization scheme from x-S, as will be described further below.

[0059] The minimum between x and S is binarized in accordance with the truncated unary binarization scheme at **202**. The result is a primary prefix **204**, which forms at least a part of the final codeword **206** to which x is mapped to. The primary prefix thus consists of a unary binarization of the value of Min(S, Abs(x)), where Min(a,b) denotes the minimum of values a and b, and where Abs(x) denotes the absolute value of x. In other words, primary prefix consists of S ones if x is greater than or equal to S, and consists of x leading ones followed by a terminating zero if x is less than S.

[0060] The absolute data value x is compared at **208** to the cut-off value S. If a comparison yields that x is smaller than S, the binarization ends at **210** and, therefore, the codeword **206**, the absolute data value x is mapped to in accordance with the binarization scheme of **FIG. 4**, just consists of the primary prefix **204**. Otherwise, i.e., if x is equal to or greater than S, the cut-off value S is subtracted from the absolute data value x at **212**. The resulting difference x minus S, sometimes called a residual, is processed at **214** in accordance with a kth order Exp-Golomb binarization scheme, with k equal to zero. The kth order Exp-Golomb binarization scheme will later be described in more detail with respect to **FIG. 7**.

[0061] The result of the binarization **214** of the difference "x minus S" is appended to the primary prefix **204** as the primary suffix **208**. Therefore, if the absolute data value x is greater than or equal to the cut-off value S the resulting codeword **206** consists of a primary prefix **204** followed by a primary suffix **208**, wherein the primary suffix **208** is a kth order Exp-Golomb binarization of x−S. As will be apparent from the further description, the primary suffix **208** itself consists of a prefix and a suffix, hereinafter called a secondary prefix **218** and a secondary suffix **220**.

[0062] Experimental studies have shown, that for absolute values of transform coefficient levels, S=14 and k=0 yield relatively good compression ratios when passing such binarized transform coefficient level values to a binary arithmetic coder even if just the bits of the codewords **206** being part of the primary prefix are arithmetically coded using an adaptive probability model, thereby reducing the coding overhead.

[0063] **FIG. 5** shows a table in which absolute values of transform coefficient levels in the left column **215** are listed with their corresponding codewords in accordance with the binarization if **FIG. 4** to the right at **252**, when S=14 und k=0. It is noted that the binarization and subsequent coding process is applied to the syntax element "transform coefficient level values minus 1", since zero valued, i.e. non-significant, transform coefficient levels are encoded using the aforementioned significances map. Therefore, with respect to **FIG. 4**, in the table of **FIG. 5** at **250** the values of x plus 1 is listed. The table of **FIG. 5** shows the result of the binarization scheme of **FIG. 4** for the values S=14 and k=0.

[0064] As can be seen, the codeword or bin string, an absolute value is mapped to, comprises at least a TU prefix, the TU prefix part of the codewords or bin strings being highlighted in **FIG. 5** at **254**. As can be seen, absolute values below 15 (=x+1) do not have an EGO suffix as shown in **256**. Further, as shown by dotted line **258** each EGO suffix **256** comprises a secondary prefix which is on the left side of dotted line **258**, and all EGO suffixes **256**, except the one of codeword belonging to absolute value 15, comprise a secondary suffix arranged to the right side of dotted line **258**.

[0065] In the same way as **FIG. 5**, **FIG. 6** shows a table of pairs of absolute values and bin strings as they are obtained in accordance with the binarization scheme of **FIG. 4** with k=3 and S=9. The elements of the table of **FIG. 6**

being equal to those of **FIG. 5** are indicated by the same reference numbers as in **FIG. 5**, and a repetitive description of these elements is omitted. The sign bit is not shown in table **FIG. 6**.

[**0066**] The values for k and S according to the binarization scheme in accordance with **FIG. 6** has shown good compression effectiveness when applied to absolute components of motion vector differences. For motion vector differences UEGk binarization as shown in **FIG. 6** is constructed as follows. Let us assume the value mvd of a motion vector component is given. For the prefix part of the UEGk bin string, a TU binarization (**202** in **FIG. 4**) is invoked using the absolute value of mvd with a cut-off value of S=9. If mvd is equal to zero, the bin string consists only of the prefix code word "0", 270. If the condition $|mvd| \geqq 9$ holds (**208** in **FIG. 4**), the suffix is constructed (**214** in **FIG. 4**) as an EG3 codeword for the value of $|mvd|-9$, to which the sign of mvd is appended using the sign bit "1" (not shown) for a negative mvd and the sign bit "0" (not shown) otherwise. For mvd values with $0<|mvd|<9$, the suffix consists only of the sign bit.

[**0067**] Assuming that the components of a motion vector difference represents the prediction error at quarter-sample accuracy, the prefix part always corresponds to a maximum error component of +/− 2 samples. With the choice of the Exp-Golomb parameter k=3, the suffix code words are given such that a geometrical increase of the prediction error in units of 2 samples is captured by a linear increase in the corresponding suffix code word length.

[**0068**] After having described the functionality of binarizer **102** in **FIG. 2** with respect to FIGS. **4** to **6** in a rather coarse way, a possible implementation for the kth order Exp-Golomb binarization **214** in **FIG. 4** is described with respect to **FIG. 7** in more detail. **FIG. 7** shows a pseudo-C code illustrating the process of constructing the primary suffix part of the code word representing the binarization of absolute data value x in accordance with the binarization scheme of **FIG. 4**. First, at **300** an auxiliary parameter k is initialised to the order of the Exp-Golomb binarization used. In case of binarization of components of motion vector differences in accordance with **FIG. 6**, for example, k is initialized in step **300** to the value of 3.

[**0069**] If a comparison in line **302** between the absolute value of the motion vector difference (mvd) and the cut-off value, here **9**, reveals that the absolute value of mvd is greater than or equal to 9, in a step **304**, the cut-off value S=9 is subtracted from the absolute value of mvd to obtain sufS. Furthermore, a parameter stopLoop is initialized in step **306** to the value of zero. Next, in **308**, a conditional if-operation is performed as long as the stopLoop-parameter has not changed his value to a positive value greater than 0, as is checked in line **310**. If the conditional if-operation reveals that sufS is greater than or equal to the kth power of 2 (**312***d*), at **312** a bit having the bit value 1 is output (**312***a*), the kth power of 2 is subtracted from sufS (**312***b*), and k is incremented (**312***c*). Otherwise, if sufS is smaller than the kth power of 2 (**312***e*), a bit having the bit value of zero is output (**312***f*), a binary representation of sufS using a number of bits equal to the actual value of k (**312***g*) is output (**312***h*), and the parameter stopLoop is set to a value of 1 (**312***e*) thereby resulting in stopping the iterative execution of the if-operation **308**.

[**0070**] All steps **304** to **312** are performed if the comparison in step **302** reveals that the absolute value of mvd is greater than or equal to 9. Irrespective of the comparison in **302**, at **314** an a sign bit of zero is output if mvd is greater than zero and an a sign bit of 1 is output if mvd is smaller than zero, the sign bit not being shown in **FIG. 6**.

[**0071**] As becomes clear from the pseudo-C code of **FIG. 7**, in case of third order Exp-Golomb binarization scheme, the suffix part at least comprises four bits, one being the zero bit of **312***f*, and the other three being the bits of the binary representation output in **312***h*, as can be seen also in **FIG. 6**, neglecting the sign bit at the end of each codeword.

[**0072**] After having described with respect to **FIG. 4** to **7** the binarization performed by binarizer **102** in **FIG. 2**, with respect to **FIG. 8**, the cooperation of the context modelling stage **100***b* and the arithmetic coding stage **100***c* is explained, which the binarized syntax elements are passed to.

[**0073**] **FIG. 8** schematically shows at **350** a probability interval between p_{low} and p^{high}, with $0 \leqq p_{low} \leqq p^{high} \leqq 1$. The probability interval **350** represents an actual probability interval into which the combinations of the stages **100***a* to **100***c* have arithmetically coded leading syntax elements belonging to one slice. At the beginning of a slice, $p_{low}=0$ and $p^{high}=1$.

[**0074**] It is assumed that now the first bin of the syntax element binarized in accordance with the above-described binarization scheme is passed to the context modeling stage **100***b*. Let us assume that the syntax element is an absolute value of a transform coefficient level. The first bin in the binarization scheme for transform coefficient levels is, as can be seen in **FIG. 5**, in the last line of the table, and in **FIG. 3**, which shows the binarization code tree for the binarization scheme of **FIG. 5**, the first bit of the TU prefix of the binary string of the transform coefficient level. This bin is regularly past by switch **113** to context modeler **112**. The context modeler **112** adjusts an adaptive probability estimation **352**, according to which the first bin of the bin string has a probability of P(**0**) to be zero and a probability of P(**1**) to be one, wherein P(**1**)+P(**0**)=1. Context modeler **112** needs just one parameter in order to store or manage the adaptive probability estimation. Context modeler **112** adjusts the adaptive probability estimation in accordance with past bins or prior bins and in accordance with the context model type associated with the respective bin. The context model types defining the dependencies of the probability estimation on the past bins may be different for the different bins of the bin string of a syntax element. The context modeler **112** passes bin value and adjusted adaptive probability estimation **352** to regular coding engine **118**. Regular coding engine **118** reduces the actual probability interval **350** to a new probability interval having a range of P(**0**) multiplicated with the range of the actual probability interval **350**, i.e. with a range of $P(0)*(P_{high}-P_{low})$, if the bit value of the fist bin of the primary prefix is zero, and P(**1**) multiplicated with the range of the actual probability interval **350**, i.e. with a range of $P(1)*(P_{high}-P_{low})$, if the first bit value of the first bit of the primary prefix is one. The new probability interval shares the lower limit with the actual probability interval **350**, if the actual bin value of the first bin was zero, and the upper limit P_{high} otherwise. In other words, the probability estimation virtually subdivides the actual

interval in two subintervals, wherein the new actual probability interval is one of the two subintervals depending on the bin value to be encoded. Instead of assigning zero bin value to the lower subinterval, the lower subinterval could be associated with the most probable symbol (MPS), i.e. 1 or 0 depending on which has the higher probability according to the context model.

[**0075**] In the following example, the first bin value was zero, and therefore, the new actual probability interval, shown at **354** is obtained. The same procedure as for the first bin of the primary prefix is performed for the remaining bins of the primary prefix. Eventually, a different context model type is used for different bins and the primary prefix. This means, the dependency of the adaptation of the probability estimation on prior bins may be different for the different bins and the primary prefix, including the use of different context templates etc.

[**0076**] As can be seen from **FIG. 8**, the actual probability interval is getting narrower and narrower. Each bin is directed by switch **113** to context modeler **112**. This changes, when the first bit of the primary suffix reaches stage **10***b*. In this case, switch **113** passes the bin value to bypass coding engine **120**. The bypass coding engine **120** operates on the same actual probability interval as regular coding engine **118**, shown in **FIG. 8** at **356**. Contrary to the regular coding engine **118** the bypass coding engine **120** uses a fixed probability estimation or a static probability estimation. In particular, the fixed probability estimation used by bypass coding engine **120** assumes that the actual bin value is with equal probability a one or a zero, i.e. P(**0**)=P(**1**). Thus, bypass coding engine **120** reduces the actual probability interval **356** to either the upper or lower half of the actual probability interval **356** when coding the actual bin of the primary suffix.

[**0077**] As will be apparent from **FIG. 8**, the actual probability interval is reduced from bin to bin such that the new probability interval lies within the actual probability interval. The arithmetically coded bit stream that the regular coding engine and the bypass coding engine cooperatively output via switch **122** represents a probability value lying in the probability interval that is obtained after operating the syntax element of a whole slice.

[**0078**] As already mentioned above, the compression rate of the output string is relatively high taking into account the computational reduction with respect to the adaptive probability estimation context modeling.

[**0079**] After having described the binarization and arithmetic coding on the encoder side in accordance with embodiments of the present invention, **FIG. 9** shows as an embodiment of the present invention, the steps performed on decoder side in order to decode the arithmetically coded bit stream.

[**0080**] Firstly, in step **400**, the decoder receiving the arithmetically coded bit stream determines whether the next bin or bit to be determined from the coded bit stream is an primary prefix bit or an primary suffix bit. The decoder knows from the way of the predetermined syntax of the arithmetically coded bit stream, as to whether the next bin or bit expected is a bit of a primary prefix or a primary suffix of a binarized syntax element.

[**0081**] If, in step **400**, it is determined that the expected bit is a bit of the primary prefix, the decoder determines the bit value for this bit by binary arithmetic decoding based on an adaptively varying probability estimation or context model.

[**0082**] The decoder updates this adaptively varying probability estimation based on past decoded bins indicated by the respective context model type. The determination **402** includes subdividing an actual probability interval according to the adaptive probability estimation into two subintervals, assigning the bin value to be determined to the bin value associated with the subinterval the probability value indicated by the arithmetically coded bit stream lies in, and reducing the actual probability interval to the that subinterval, thereby simulating the steps performed by the encoder when creating the arithmetically coded bit stream as shown in **FIG. 8**.

[**0083**] If the bit is a bit of the primary suffix, in **404** the next bit or bin value is determined by performing arithmetic decoding based on a static probability model. Step **404** includes subdividing the actual probability interval according to the static probability estimation into two equally sized subintervals, assigning the bin value to be determined to the bit value associated with the subinterval in which the probability value indicated by the arithmetically coded bit stream lies, and reducing the actual probability interval to that subinterval.

[**0084**] The decoder repeats, **408**, the steps **400** to **404** if there are bits left to achieve the bit values for the bits of a whole codeword. If there are no bits left at step **408**, the decoding process ends at step **410**. The decoder knows when the binary representation of a syntax element ends, i.e. which decoded bit is the last of a actual syntax element, from following the respective binarization code tree, such as the code tree shown in **FIG. 3** in case of the syntax element being a absolute transform coefficient level minus 1.

[**0085**] **FIG. 10** shows the process of recovering from the codeword as obtained by the process of **FIG. 9** the data value, which has been binarized into the codeword. The bit values as obtained by the process of **FIG. 9** form a bit stream **450**. The decoder knows, as described above, when a new code word is on the bit stream **450**, the instance of a new codeword being indicated by way of a signal **452**.

[**0086**] In a minimum extracting step **454** then a value m is extracted from the binary code word by counting the leading ones in the primary prefix of the code word, the count being equal to m. If m is equal to S, what is checked in step **456** (the value of S is known to the decoder because he knows which syntax element is coded by which binarization scheme), in a difference extracting step **458** the bits following to the bits of the primary prefix from the bit stream **450** are received, which form the primary suffix part of the code word. In the difference extracting step **458** the difference between the data value x to be recovered and the cut-off value S is recovered from the primary suffix of the code word in the bit stream **450**.

[**0087**] In step **460**, S is added to the difference x-S recovered in step **358** to obtain the value x, the value for the actually encoded syntax element.

[0088] An example for a pseudo-C code illustrating minimum extraction step **454** could be:

```
m = -1;                    /Initializing counting parameter
for (b=0; (b-1); m++) {    /Bitwise reading the leading bits of
    b=read_bits(1);        /codeword and, before each reading,
        if (m=S)           /incrementing k, until the actually
            b=0;           /read bit is zero or m=S
    }
```

[0089] The substeps performed by in difference extracting step **458** are shown in **FIG. 11**. In a step **500** the difference extractor counts the leading bits in the primary suffix to obtain a value m. Next, k, which is 3 for motion vector difference and is 0 for a transform coefficient level value, is compared to zero in step **502**. If k is equal to zero, in step **504**, m is compared to zero in step **504**. If comparison yield that m=0, it is deduced in step **506** that the data value x is equal to the cut-off value S, which is 9 in the case of motion vector differences and 14 in the case of transform coefficient levels.

[0090] If k is not equal to zero and/or m is not equal to zero, in step **508** the next k plus m following bits are read from the bit stream **450**, i.e. the bits following the terminating bit of the secondary prefix. Thereby, a binary (k+m) bit long representation of $A=x-S+2k(1-2^m)$ is achieved. As can easily gathered form this equation, A=x−S if m=0.

[0091] When a comparison of m with 0 in step **510** reveals that m=0, from the binary representation A the value of $2^k(1-2^m)$ is subtracted to obtain the value of x-S.

[0092] In the following, reference is made to **FIG. 12** to show, in more detail than in **FIG. 1**, the complete setup of a video encoder engine including an entropy-encoder as it is shown in **FIG. 12** in block **800** in which the aforementioned binarization and binary arithmetic coding is used. In particular, **FIG. 12** shows the basic coding structure for the emerging H.264/AVC standard for a macroblock. The input video signal is, split into macroblocks, each macroblock having 16×16 pixels. Then, the association of macroblocks to slice groups and slices is selected, and, then, each macroblock of each slice is processed by the network of operating blocks in **FIG. 12**. It is to be noted here that an efficient parallel processing of macroblocks is possible, when there are various slices in the picture. The association of macroblocks to slice groups and slices is performed by means of a block called coder control **802** in **FIG. 12**. There exist several slices, which are defined as follows:

[0093] I slice: A slice in which all macroblocks of the slice are coded using intra prediction.

[0094] P slice: In addition, to the coding types of the I slice, some macroblocks of the P slice can also be coded using inter prediction with at most one motion-compensated prediction signal per prediction block.

[0095] B slice: In addition, to the coding types available in a P slice, some macroblocks of the B slice can also be coded using inter prediction with two motion-compensated prediction signals per prediction block.

[0096] The above three coding types are very similar to those in previous standards with the exception of the use of reference pictures as described below. The following two coding types for slices are new:

[0097] SP slice: A so-called switching P slice that is coded such that efficient switching between different precoded pictures becomes possible.

[0098] SI slice: A so-called switching I slice that allows an exact match of a macroblock in an SP slice for random access and error recovery purposes.

[0099] Slices are a sequence of macroblocks, which are processed in the order of a raster scan when not using flexible macroblock ordering (FMO). A picture maybe split into one or several slices as shown in **FIG. 14**. A picture is therefore a collection of one or more slices. Slices are self-contained in the sense that given the active sequence and picture parameter sets, their syntax elements can be parsed from the bit stream and the values of the samples in the area of the picture that the slice represents can be correctly decoded without use of data from other slices provided that utilized reference pictures are identical at encoder and decoder. Some information from other slices maybe needed to apply the deblocking filter across slice boundaries.

[0100] FMO modifies the way how pictures are partitioned into slices and macroblocks by utilizing the concept of slice groups. Each slice group is a set of macroblocks defined by a macroblock to slice group map, which is specified by the content of the picture parameter set and some information from slice headers. The macroblock to slice group map consists of a slice group identification number for each macroblock in the picture, specifying which slice group the associated macroblock belongs to. Each slice group can be partitioned into one or more slices, such that a slice is a sequence of macroblocks within the same slice group that is processed in the order of a raster scan within the set of macroblocks of a particular slice group. (The case when FMO is not in use can be viewed as the simple special case of FMO in which the whole picture consists of a single slice group.)

[0101] Using FMO, a picture can be split into many macroblock-scanning patterns such as interleaved slices, a dispersed macroblock allocation, one or more "foreground" slice groups and a "leftover" slice group, or a checker-board type of mapping.

[0102] Each macroblock can be transmitted in one of several coding types depending on the slice-coding type. In all slice-coding types, the following types of intra coding are supported, which are denoted as Intra_4×4 or Intra_16×16 together with chroma prediction and I_PCM prediction modes.

[0103] The Intra_4×4 mode is based on predicting each 4×4 luma block separately and is well suited for coding of parts of a picture with significant detail. The Intra_16×16 mode, on the other hand, does prediction of the whole 16×16 luma block and is more suited for coding very smooth areas of a picture.

[0104] In addition, to these two types of luma prediction, a separate chroma prediction is conducted. As an alternative to Intra_4×4 and Intra_16×16, the I_PCM coding type

allows the encoder to simply bypass the prediction and transform coding processes and instead directly send the values of the encoded samples. The I_PCM mode serves the following purposes:

[0105] 1. It allows the encoder to precisely represent the values of the samples

[0106] 2. It provides a way to accurately represent the values of anomalous picture content without significant data expansion

[0107] 3. It enables placing a hard limit on the number of bits a decoder must handle for a macroblock without harm to coding efficiency.

[0108] In contrast to some previous video coding standards (namely H.263+ and MPEG-4 Visual), where intra prediction has been conducted in the transform domain, intra prediction in H.264/AVC is always conducted in the spatial domain, by referring to the bins of neighboring samples of previously coded blocks which are to the left and/or above the block to be predicted. This may incur error propagation in environments with transmission errors that propagate due to motion compensation into inter-coded macroblocks. Therefore, a constrained intra coding mode can be signaled that allows prediction only from intra-coded neighboring macroblocks.

[0109] When using the Intra_4×4 mode, each 4×4 block is predicted from spatially neighboring samples as illustrated on the left-hand side of **FIG. 15**. The 16 samples of the 4×4 block, which are labeled as a-p, are predicted using prior decoded samples in adjacent blocks labeled as A-Q. For each 4×4 block one of nine prediction modes can be utilized. In addition, to "DC" prediction (where one value is used to predict the entire 4×4 block), eight directional prediction modes are specified as illustrated on the right-hand side of **FIG. 15**. Those modes are suitable to predict directional structures in a picture such as edges at various angles.

[0110] In addition, to the intra macroblock coding types, various predictive or motion-compensated coding types are specified as P macroblock types. Each P macroblock type corresponds to a specific partition of the macroblock into the block shapes used for motion-compensated prediction. Partitions with luma block sizes of 16×16, 16×8, 8×16, and 8×8 samples are supported by the syntax. In case partitions with 8×8 samples are chosen, one additional syntax element for each 8×8 partition is transmitted. This syntax element specifies whether the corresponding 8×8 partition is further partitioned into partitions of 8×4, 4×8, or 4×4 luma samples and corresponding chroma samples.

[0111] The prediction signal for each predictive-coded M×N luma block is obtained by displacing an area of the corresponding reference picture, which is specified by a translational motion vector and a picture reference index. Thus, if the macroblock is coded using four 8×8 partitions and each 8×8 partition is further split into four 4×4 partitions, a maximum of sixteen motion vectors may be transmitted for a single P macroblock.

[0112] The quantization parameter SliceQP is used for determining the quantization of transform coefficients in H.264/AVC. The parameter can take 52 values. Theses values are arranged so that an increase of 1 in quantization parameter means an increase of quantization step size by approximately 12% (an increase of 6 means an increase of quantization step size by exactly a factor of 2). It can be noticed that a change of step size by approximately 12% also means roughly a reduction of bit rate by approximately 12%.

[0113] The quantized transform coefficients of a block generally are scanned in a zig-zag fashion and transmitted using entropy coding methods. The 2×2 DC coefficients of the chroma component are scanned in raster-scan order. All inverse transform operations in H.264/AVC can be implemented using only additions and bit-shifting operations of 16-bit integer values. Similarly, only 16-bit memory accesses are needed for a good implementation of the forward transform and quantization process in the encoder.

[0114] The entropy encoder **800** in **FIG. 8** in accordance with a coding arrangement of **FIG. 2**. A context modeler feeds a context model, i.e., a probability information, to an arithmetic encoder, which is also referred to as the regular coding engine. The to be encoded bit, i.e. a bin, is forwarded from the context modeler to the regular coding engine. This bin value is also fed back to the context modeler so that a context model update can be obtained. A bypass branch is provided, which includes an arithmetic encoder, which is also called the bypass coding engine. The bypass coding engine is operative to arithmetically encode the input bin values. Contrary to the regular coding engine, the bypass coding engine is not an adaptive coding engine but works preferably with a fixed probability model without any context adaption. A selection of the two branches can be obtained by means of switches. The binarizer device is operative to binarize non-binary valued syntax elements for obtaining a bin string, i.e., a string of binary values. In case the syntax element is already a binary value syntax element, the binarizer **78** is bypassed. Therefore, in CABAC (CABAC=Context-based Adaptive Binary Arithmetic Coding) the encoding process consists of at most three elementary steps:

[0115] 1. binarization

[0116] 2. context modeling

[0117] 3. binary arithmetic coding

[0118] In the first step, a given non-binary valued syntax element is uniquely mapped to a binary sequence, a so-called bin string. When a binary valued syntax element is given, this initial step is bypassed, as shown in **FIG. 2**. For each element of the bin string or for each binary valued syntax element, one or two subsequent steps may follow depending on the coding mode.

[0119] In the co-called regular coding mode, prior to the actual arithmetic coding process the given binary decision, which, in the sequel, we will refer to as a bin, enters the context modeling stage, where a probability model is selected such that the corresponding choice may depend on previously encoded syntax elements or bins. Then, after the assignment of a context model the bin value along with its associated model is passed to the regular coding engine, where the final stage of arithmetic encoding together with a subsequent model updating takes place (see **FIG. 2**).

[0120] Alternatively, the bypass coding mode is chosen for selected bins in order to allow a speedup of the whole encoding (and decoding) process by means of a simplified coding engine without the usage of an explicitly assigned

model. This mode is especially effective when coding the bins of the primary suffix of those syntax elements, concerning components of differences of motion vectors and transform coefficient levels.

[0121] In the following, the three main functional building blocks, which are binarization, context modeling, and binary arithmetic coding in the encoder of **FIG. 12**, along with their interdependencies are discussed in more detail.

[0122] In the following, several details on binary arithmetic coding will be set forth.

[0123] Binary arithmetic coding is based on the principles of recursive interval subdivision that involves the following elementary multiplication operation. Suppose that an estimate of the probability $p_{LPS} \in (0, 0.5]$ of the least probable symbol (LPS) is given and that the given interval is represented by its lower bound L and its width (range) R. Based on that settings, the given interval is subdivided into two subintervals: one interval of width

$$R_{LPS}=R\times p_{LPS},$$

[0124] which is associated with the LPS, and the dual interval of width $R_{MPS}=R-R_{LPS}$, which is assigned to the most probable symbol (MPS) having a probability estimate of $1-p_{LPS}$. Depending on the observed binary decision, either identified as the LPS or the MPS, the corresponding sub-interval is then chosen as the new current interval. A binary value pointing into that interval represents the sequence of binary decisions processed so far, whereas the range of the interval corresponds to the product of the probabilities of those binary symbols. Thus, to unambiguously identify that interval and hence the coded sequence of binary decisions, the Shannon lower bound on the entropy of the sequence is asymptotically approximated by using the minimum precision of bits specifying the lower bound of the final interval.

[0125] An important property of the arithmetic coding as described above is the possibility to utilize a clean interface between modeling and coding such that in the modeling stage, a model probability distribution is assigned to the given symbols, which then, in the subsequent coding stage, drives the actual coding engine to generate a sequence of bits as a coded representation of the symbols according to the model distribution. Since it is the model that determines the code and its efficiency in the first place, it is of importance to design an adequate model that explores the statistical dependencies to a large degree and that this model is kept "up to date" during encoding. However, there are significant model costs involved by adaptively estimating higher-order conditional probabilities. These costs are reduced by use of the binarization schemes as described above.

[0126] Suppose a pre-defined set T of past symbols, a so-called context template, and a related set $C=\{0, \ldots, C-1\}$ of contexts is given, where the contexts are specified by a modeling function F. For each symbol x to be coded, a conditional probability $p(x|F(z))$ is estimated by switching between different probability models according to the already coded neighboring symbols $z \in T$. After encoding x using the estimated conditional probability $p(x|F(z))$ is estimated on the fly by tracking the actual source statistics. Since the number of different conditional probabilities to be estimated for an alphabet size of m is high, it is intuitively clear that the model cost, which represents the cost of "learning" the model distribution, is proportional to the number of past symbols to the power of four

[0127] This implies that by increasing the number C of different context models, there is a point, where overfitting of the model may occur such that inaccurate estimates of $p(x|F(z))$ will be the result.

[0128] This problem is solved in the encoder of **FIG. 12** by imposing two severe restrictions on the choice of the context models. First, very limited context templates T consisting of a few neighbors of the current symbol to encode are employed such that only a small number of different context models C is effectively used.

[0129] Secondly, context modeling is restricted to selected bins of the binarized symbols as mentioned above and is of especially advantage with respect to primary prefix und suffix of the motion vector differences and the transform coefficient levels but which is also true for other syntax elements. As a result, the model cost is drastically reduced, even though the ad-hoc design of context models under these restrictions may not result in the optimal choice with respect to coding efficiency.

[0130] Four basic design types of context models can be distinguished. The first type involves a context template with up to two neighboring syntax elements in the past of the current syntax element to encode, where the specific definition of the kind of neighborhood depends on the syntax element. Usually, the specification of this kind of context model for a specific bin is based on a modeling function of the related bin values for the neighboring element to the left and on top of the current syntax element, as shown in **FIG. 13**.

[0131] The second type of context models is only defined for certain data subtypes. For this kind of context models, the values of prior coded bins $(b_0, b_1, b_2, \ldots, b_{i-1})$ are used for the choice of a model for a given bin with index i. Note that these context models are used to select different models for different internal nodes of a corresponding binary tree.

[0132] Both the third and fourth type of context models is applied to residual data only. In contrast to all other types of context models, both types depend on context categories of different block types. Moreover, the third type does not rely on past coded data, but on the position in the scanning path. For the fourth type, modeling functions are specified that involve the evaluation of the accumulated number of encoded (decoded) levels with a specific value prior to the current level bin to encode (decode).

[0133] Besides these context models based on conditional probabilities, there are fixed assignments of probability models to bin indices for all those bins that have to be encoded in regular mode and to which no context model of the previous specified category can be applied.

[0134] The above described context modeling is suitable for a video compression engine such as video compression/decompression engines designed in accordance with the presently emerging H.264/AVC video compression standard. To summarize, for each bin of a bin string the context modeling, i.e., the assignment of a context variable, generally depends on the to be processed data type or sub-data type, the precision of the binary decision inside the bin string as well as the values of previously coded syntax elements or

bins. With the exception of special context variables, the probability model of a context variable is updated after each usage so that the probability model adapts to the actual symbol statistics.

[0135] An specific example for a context-based adaptive binary arithmetic coding scheme to which the above binarization scheme could be aplied is described in: D. Marpe, G. Blattermann, and T. Wiegand, "Adaptive codes for H.26L," ITU-T SG16/Q.6 Doc. VCEG-L13, Eibsee, Germany, January 2003-07-10, which is incorporated herein by reference.

[0136] It is noted that the inventive binarization concept is not at all restricted to the use in arithmetic coding. It may be used advantageously also in other applications and in particular applied to data values, such as any transform coefficients or the like. Moreover, the binarization may be useful not only with respect to arithmetic coding but also in connection with other data processing schemes.

[0137] With respect to the bit values, bin strings, codewords and so on, given above, it is noted that same max be switched. Moreover, with respect to the primary prefix and suffix, the bits may be switched with respect to one of them and left unchanged with respect to the other.

[0138] Depending on an actual implementation, the inventive encoding/decoding and binarization/recovering methods can be implemented in hardware or in software. Therefore, the present invention also relates to a computer program, which can be stored on a computer-readable medium such as a CD, a disk or any other data carrier. The present invention is, therefore, also a computer program having a program code which, when executed on a computer, performs the inventive method of encoding or binarizing or the inventive method of decoding or recovering described in connection with the above figures.

What is claimed is:

1. (canceled)
2. (canceled)
3. (canceled)
4. (canceled)
5. (canceled)
6. (canceled)
7. (canceled)
8. (canceled)
9. (canceled)
10. (canceled)
11. (canceled)
12. (canceled)
13. (canceled)
14. (canceled)
15. (canceled)
16. (canceled)
17. (canceled)
18. (canceled)
19. (canceled)

20. Method for decoding a coded bit stream which represents a binarized representation of the data value, the binarized representation of the data value being a codeword having a primary prefix, which is a binarization of the minimum of the data value and a predetermined cut-off value in accordance with a first binarization scheme and, if the data value is greater than the predetermined cut-off value, a primary suffix appended to the primary prefix, the primary suffix being a binarization of the difference of the data value minus the predetermined cut-off value in accordance with a second binarization scheme, the method comprising the following steps:

for each bit in the codeword,

if the bit of the codeword is part of the primary prefix, determining the bit by binary arithmetically decoding the coded bit stream by means of a adaptively varying bit value probability estimation; and

if the bit of the codeword is part of the primary suffix, determining the bit by binary arithmetically decoding the bit by means of a static bit value probability estimation,

thereby obtaining the codeword representing the data value.

21. (canceled)
22. (canceled)
23. (canceled)

24. Apparatus for decoding a coded bit stream which represents a binarized representation of the data value, the binarized representation of the data value being a codeword having a primary prefix, which is a binarization of the minimum of the data value and a predetermined cut-off value in accordance with a first binarization scheme and, if the data value is greater than the predetermined cut-off value, a primary suffix appended to the primary prefix, the primary suffix being a binarization of the difference of the data value minus the predetermined cut-off value in accordance with a second binarization scheme, comprising:

means for, for each bit in the codeword,

if the bit of the codeword is part of the primary prefix, determining the bit by binary arithmetically decoding the coded bit stream by means of a adaptively varying bit value probability estimation; and

if the bit of the codeword is part of the primary suffix, determining the bit by binary arithmetically decoding the bit by means of a static bit value probability estimation,

thereby obtaining the codeword representing the data value.

25. (canceled)
26. (canceled)

27. Computer program having instructions for performing, when running on a computer, a method for decoding a coded bit stream which represents a binarized representation of the data value, the binarized representation of the data value being a codeword having a primary prefix, which is a binarization of the minimum of the data value and a predetermined cut-off value in accordance with a first binarization scheme and, if the data value is greater than the predetermined cut-off value, a primary suffix appended to the primary prefix, the primary suffix being a binarization of the difference of the data value minus the predetermined cut-off value in accordance with a second binarization scheme, the method comprising the following steps:

for each bit in the codeword,

if the bit of the codeword is part of the primary prefix, determining the bit by binary arithmetically decod-

ing the coded bit stream by means of a adaptively varying bit value probability estimation; and

if the bit of the codeword is part of the primary suffix, determining the bit by binary arithmetically decoding the bit by means of a static bit value probability estimation,

thereby obtaining the codeword representing the data value.

28. The method in accordance with claim 20, wherein the first binarization scheme is a truncated unary binarization scheme merely defined for values between zero and the predetermined cut-off value.

29. The method in accordance with claim 20, wherein the second binarization scheme is a kth order exponential Golomb binarization scheme with k being an integer greater than or equal to zero.

30. The method in accordance with claim 20, wherein the data value is the absolute value of a component of a motion vector difference in a precoded representation video signal.

31. The method in accordance with claim 20, wherein the cut-off value is 9.

32. The method in accordance with claim 20, wherein the data value is the absolute value of a transform coefficient level minus 1 in a precoded representation video signal.

33. The method in accordance with claim 20, wherein the cut-off value is 15.

35. The method in accordance with claim 20, wherein the adaptively varying bit value probability estimation varies in accordance with a predetermined context model dependent on past decoded bits.

* * * * *