IN THE UNITED STATES DISTRICT COURT
FOR THE EASTERN DISTRICT OF TEXAS
MARSHALL DIVISION

K.MIZRA LLC, Plaintiff, v. NOKIA CORPORATION, NOKIA SOLUTIONS AND NETWORKS OY, AND NOKIA OF AMERICA CORPORATION Defendants.	)))))))))))))	Case No. _____ **JURY TRIAL DEMANDED**

COMPLAINT

Plaintiff K.Mizra LLC ("K.Mizra") files this Complaint against Defendants Nokia Corporation, Nokia Solutions and Networks Oy, and Nokia of America Corporation (collectively, "Nokia").

NATURE OF THE CASE

1. This is an action for Nokia's infringement of K.Mizra's United States Patent Nos. 9,485,176 ("the '176 Patent"); 10,735,320 ("the '320 Patent"); 9,264,354 ("the '354 Patent"); 9,749,249 ("the '249 Patent"); and 8,018,880 ("the '880 Patent"), or together, "the Patents-in-Suit".

2. Defendants Nokia have been infringing the Patents-in-Suit in violation of 35 U.S.C. § 271 by manufacturing, using, importing, selling, and offering for sale in the United States products, methods, processes, services and/or systems that infringe '176 and '320 Patents, which include but are not limited to the Nokia Digital Operations Center, Nokia Orchestration Center, Nokia Assurance Center, Nokia Unified Inventory, Nokia Network Services Platform (NSP),

Nokia Services Director (NSD), Nokia E2E Network Slice Orchestrator, and all other substantially similar products, systems, solutions, and services (collectively "Accused Nokia Network Operations Instrumentalities").

3. Defendants Nokia have been infringing the Patent-in-Suit in violation of 35 U.S.C. § 271 by manufacturing, using, importing, selling, and offering for sale in the United States products, methods, processes, services and/or systems that infringe the '249, '354, and '880 Patents, which include the Nokia Service Router Operation System (SR OS), Nokia BGP VPLS Solution, and the Nokia Portfolio of physical and virtualized routers such as the 7750 SR, 7710 SR, 710 SR, 7450 ESS series, 7x50 SR/ESS, and all other substantially similar products, systems, solutions, and services (collectively "Accused Nokia Router Instrumentalities").

4. Plaintiff K.Mizra seeks appropriate damages and prejudgment and post-judgment interest for Nokia's infringement of the Patents-in-Suit.

THE PARTIES

5. Plaintiff K.Mizra is a Delaware limited liability corporation with its principal place of business at 77 Brickell Avenue, #500-96031, Miami, Florida 33131. K.Mizra is the assignee and owner of the Patents-in-Suit.

6. Defendant Nokia Corporation is a foreign corporation organized and existing under the laws of Finland, with a principal place of business at Karakarri, 7, FIN-02610, Espoo, Finland.

7. Defendant Nokia Solutions and Networks Oy is a corporation organized and existing under the laws of Finland with its principal place of business at Karaportti 3, 02610 Espoo, Finland.

8. On information and belief, Nokia Solutions and Networks Oy is a wholly owned subsidiary of Nokia Corporation.

9. Defendant Nokia of America Corporation is a Delaware corporation with its U.S. Headquarters in Dallas, Texas. Nokia of America may be served through its registered agent Prentice Hall Corporation System, 211 E. 7th Street, Suite 620, Austin, Texas 78701. On information and belief, Nokia of America is registered to do business in the State of Texas and has been since at least December 29, 1995.

10. On information and belief, Nokia of America Corporation is an indirect wholly owned subsidiary of Nokia Corporation and Nokia Solutions and Networks Oy.

11. The Nokia Defendants hold themselves out as a single "Nokia" company, exemplified in the company's website, www.nokia.com. Nokia offers for sale and sells the infringing products and services through that website.

12. On information and belief, Nokia's operations in the Eastern District of Texas are substantial and varied, including its offices located at 2525 Highway 121, Lewisville, Texas 75056 and 601 Data Drive, Plano, Texas 75075. Nokia has offices in the Eastern District of Texas where it sells and/or markets its products, including its offices in Lewisville and Plano, Texas.

13. Nokia maintains additional offices throughout Texas including its U.S. headquarters in Dallas.

14. By registering to conduct business in Texas and by maintaining facilities in at least the cities of Plano and Lewisville, Nokia has multiple regular and established places of business within the Eastern District of Texas.

JURISDICTION AND VENUE

15. This is an action for patent infringement arising under the Patent Laws of the United States, Title 35 of the United States Code.

16. This Court has original subject matter jurisdiction under 28 U.S.C. §§ 1331 and

1338(a).

17. This Court has personal jurisdiction over Nokia because, *inter alia*, Nokia has a continuous presence in, and systematic contact with, this District and has registered to conduct business in the state of Texas. In addition, Nokia, directly or through subsidiaries or intermediaries (including distributors, retailers, and others), conducts its business extensively throughout Texas by shipping, distributing, offering for sale, selling, and advertising (including through the provision of its web page www.nokia.com) its products and/or services in the State of Texas and the Eastern District of Texas. Nokia, directly and through subsidiaries or intermediaries (including distributors, retailers, and others), has purposefully and voluntarily placed one or more of the Accused Nokia Network Operations Instrumentalities and Accused Nokia Router Instrumentalities into the stream of commerce with the intention and expectation that they will be purchased and used by customers in the Eastern District of Texas. The Accused Nokia Network Operations Instrumentalities and Accused Nokia Router Instrumentalities have been and continue to be purchased and/or used by customers in the Eastern District of Texas.

18. Nokia has committed and continues to commit acts of infringement of K.Mizra's Patents-in-Suit in violation of the United States Patent Laws, and has used infringing products within this District. Nokia's infringement has caused substantial injury to K.Mizra, including within this District.

19. Venue is proper in this District pursuant to 28 U.S.C. §§ 1400 and 1391 because Nokia is registered to do business in the state of Texas, has committed acts of infringement in this District, maintains regular and established places of business in this District, and on information belief, has transacted business in this District. Nokia of America Corporation maintains a regular and established place of business in the Eastern District of Texas, including offices located at 2525

Highway 121, Lewisville, Texas 75056 and 601 Data Drive, Plano, Texas 75075. Nokia has operated the Plano office as a "NokiaEDU Training Center," which it describes as "the company's premiere learning organization serving customers, partners and employees worldwide . . . . to deliver[] a top-quality learning experience tailored to our customers' specific requirements and preferences."[1]

20. Venue is proper as to Nokia Corporation under 28 U.S.C. § 1391(c)(3) as a corporation that is not resident in the United States.

21. Venue is proper as to Nokia Solutions and Networks Oy under 28 U.S.C. §1391(c)(3) as a corporation that is not resident in the United States.

THE '176 PATENT-IN-SUIT

22. The '176 Patent is titled "Global IP-Based Service Oriented Network Architecture" and was issued by the United States Patent Office to inventors Ping Pan and Richard Gitlin.

23. The '176 Patent issued on November 1, 2016. The earliest application related to the '176 Patent was filed on August 4, 2006. A true and correct copy of the '176 Patent is attached as Exhibit A.

24. K.Mizra is the owner of all rights, title and interest in and to the '176 Patent with the full and exclusive right to bring suit to enforce the '176 Patent.

25. The '176 Patent is valid and enforceable under the United States Patent Laws.

26. Each of the named inventors of the '176 Patent assigned the patent to Hammerhead Systems, Inc., who thereafter assigned them to Brixham Solutions Ltd. Brixham Solutions Ltd. assigned the Patents-in-Suit to Global Innovation Aggregators LLC, who in turn assigned them to

[1] https://learningstore.nokia.com/locations/files/US-Plano.pdf.

K.Mizra. K.Mizra owns all rights, title and interest in each of the Patents-in-Suit, including the right to sue for past infringement.

27. The ’176 Patent teaches novel systems and methods for improved network traffic routing policies and facilitating internet services across disparate network technologies and service providers. The’176 Patent’s claimed systems and methods combine specific hardware and software components in unconventional ways. In contrast, conventional systems faced several challenges due to diversity between access/metro networks and core/backbone networks, which complicated the management of the disparate network interfaces and the provision of consistent network services. For example, conventional network Layer-2 and Layer-3 Quality of Service (QoS) mechanisms were not adequate to satisfy varying internet service requirements such as for multimedia applications, which can have different tolerances for data packet delivery issues, e.g., latency, packet loss, etc. In other words, conventional systems could not adequately meet specific performance requirements or QoS guarantees for video and voice traffic traversing across specific service provider networks.

28. Through its novel technological innovation, the ’176 Patent provides systems and methods with a service-oriented network architecture, which facilitates the transport of QoS-guaranteed voice and video traffic across disparate provider networks. The ’176 Patent leverages pseudowires to enable the delivery of new services over network deployments that may be operated by different service providers and carriers with diverse network technologies, e.g., both legacy and new. The ’176 Patent aggregates network traffic into pseudowires and routes the traffic accordingly based on routing policies specific to the type of applications associated with the traffic to ensure service level agreements (SLA) and QoS guaranteed by the service providers.

THE ’320 PATENT-IN-SUIT

29. The ’320 Patent is titled “Application Wire” and was issued by the United States Patent Office to inventors Ping Pan and Richard Gitlin.

30. The ’320 Patent issued on August 4, 2020. The earliest application related to the ’320 Patent was filed on October 7, 2005. A true and correct copy of the ’320 Patent is attached as Exhibit B.

31. K.Mizra is the owner of all rights, title and interest in and to the ’320 Patent with the full and exclusive right to bring suit to enforce the ’320 Patent.

32. The ’320 Patent is valid and enforceable under the United States Patent Laws.

33. Each of the named inventors of the ’320 Patent assigned the patent to Hammerhead Systems, Inc., who thereafter assigned them to Brixham Solutions Ltd. Brixham Solutions Ltd. assigned the Patents-in-Suit to Global Innovation Aggregators LLC, who in turn assigned them to K.Mizra. K.Mizra owns all rights, title and interest in each of the Patents-in-Suit, including the right to sue for past infringement.

34. The ’320 Patent teaches novel systems and methods for improved management of network traffic such as traffic for multimedia applications over a service provider or carrier network, particularly in the context of MultiProtocol Label Switching (MPLS) networks. The ’320 Patent’s claimed systems and methods combine specific hardware and software components in unconventional ways. In contrast, conventional MPLS network systems primarily handled data traffic at the network Layer-3 level and below, which limited their ability to provide Quality of Service (QoS) guarantees at the user application level. Traditional methods like IntServ/RSVP and DiffServ had limitations in scalability and required over-provisioning of network bandwidth to ensure QoS, which was not always feasible. Additionally, these methods required changes to intermediate nodes and equipment, which was not desirable.

35. Through its novel technological innovation, the ’320 Patent provides systems and methods for more efficient management and transfer of application traffic across the network, enhancing QoS and flexibility in handling application-specific service requirements and guarantees. The ’320 Patent maps application specific traffic or application flows to pseudowires with an awareness of application protocol requirements, thereby providing a scalable solution for managing application-specific QoS without requiring changes to the existing equipment at intermediate network nodes.

THE ’354 PATENT-IN-SUIT

36. The ’354 Patent is titled “Mapping PBT And PBB-TE Traffic To VPLS and Other Services” and was issued by the United States Patent Office to inventors Norival R. Figueira, Fong Liaw, and Richard Gitlin.

37. The ’354 Patent issued on February 16, 2016. The earliest application related to the ’354 Patent was filed on January 25, 2007. A true and correct copy of the ’354 Patent is attached as Exhibit C.

38. K.Mizra is the owner of all rights, title and interest in and to the ’354 Patent with the full and exclusive right to bring suit to enforce the ’354 Patent.

39. The ’354 Patent is valid and enforceable under the United States Patent Laws.

40. Each of the named inventors of the ’354 Patent assigned the patent to Hammerhead Systems, Inc., who thereafter assigned them to Brixham Solutions Ltd. Brixham Solutions Ltd. assigned the Patents-in-Suit to Global Innovation Aggregators LLC, who in turn assigned them to K.Mizra. K.Mizra owns all rights, title and interest in each of the Patents-in-Suit, including the right to sue for past infringement.

41. The ’354 Patent teaches novel systems and methods for improving efficiency and

flexibility in the transfer and mapping of data in a network, particularly in the context of Provider Backbone Transport (PBT) and Provider Backbone Bridge Traffic Engineering (PBB-TE) systems. The ’354 Patent’s claimed systems and methods combine specific hardware and software components in unconventional ways. In contrast, conventional systems faced limitations on scalability of service provider networks, service mapping, and traffic management, which for example, were constrained by the number of service virtual local area networks or VLANs. Additionally, conventional architectures interconnecting Provider Backbone Transport with various services, e.g., Virtual Private LAN Service (VPLS) and Ethernet Virtual Private Line (EVPL), was limited, making it difficult for carriers to provision engineered and protected point-to-point service instances effectively.

42. Through its novel technological innovation, the ’354 Patent provides systems and methods to efficiently map PBT and PBB-TE network traffic to services such as VPLS, thereby enhancing the scalability and manageability of provider networks that use these technologies. The invention teaches a nonconventional way to transfer data within a network, specifically through the use of Provider Backbone Transport (PBT) frames. For example, the invention involves receiving a PBT frame, identifying a set of specific identifiers within it, mapping the frame to a service based on these identifiers, formatting the frame according to the service to create a service frame, and subsequently transferring this service frame to a network associated with the service.

THE ’249 PATENT-IN-SUIT

43. The ’249 Patent is titled “Pseudowire Protection Using A Standby Pseudowire” and was issued by the United States Patent Office to inventor Ping Pan.

44. The ’249 Patent issued on August 29, 2017. The earliest application related to the ’249 Patent was filed on February 14, 2005. A true and correct copy of the ’249 Patent is attached

as Exhibit D.

45. K.Mizra is the owner of all rights, title and interest in and to the ’249 Patent with the full and exclusive right to bring suit to enforce the ’249 Patent.

46. The ’249 Patent is valid and enforceable under the United States Patent Laws.

47. Each of the named inventors of the ’249 Patent assigned the patent to Hammerhead Systems, who thereafter assigned them to Brixham Solutions Ltd. Brixham Solutions Ltd. assigned the Patents-in-Suit to Global Innovation Aggregators LLC, who in turn assigned them to K.Mizra. K.Mizra owns all rights, title and interest in each of the Patents-in-Suit, including the right to sue for past infringement.

48. The ’249 Patent teaches novel systems and methods for improved data protection and redundancy in networks using pseudowires, which are used to carry Layer-2 traffic over a network. The ’249 Patent’s claimed systems and methods combine specific hardware and software components in unconventional ways. In contrast, conventional systems provided limited data protection, which can lead to data loss if an active pseudowire fails. Additionally conventional protection schemes often did not apply across different physical media types, and existing protocols lacked adequate mechanisms for determining data priority during switchover, potentially resulting in the loss of mission-critical data. Through its novel technological innovation, the ’249 Patent provides systems and methods to configure a standby pseudowire to protect network data traffic, thereby enhancing the reliability and control of pseudowire services without requiring significant overhaul to existing devices and protocols.

THE ’880 PATENT-IN-SUIT

49. The ’880 Patent is titled “Layer 2 Virtual Private Network Over PBB-TE/PBT and Seamless Interworking With VPLS” and was issued by the United States Patent Office to inventors

Norival R. Figueira and Richard Gitlin.

50. The ’880 Patent issued on September 13, 2011. The earliest application related to the ’880 Patent was filed on March 26, 2007. A true and correct copy of the ’880 Patent is attached as Exhibit E.

51. K.Mizra is the owner of all rights, title and interest in and to the ’880 Patent with the full and exclusive right to bring suit to enforce the ’880 Patent.

52. The ’880 Patent is valid and enforceable under the United States Patent Laws.

53. Each of the named inventors of the ’880 Patent assigned the patent to Hammerhead Systems, Inc., who thereafter assigned them to Brixham Solutions Ltd. Brixham Solutions Ltd. assigned the Patents-in-Suit to Global Innovation Aggregators LLC, who in turn assigned them to K.Mizra. K.Mizra owns all rights, title and interest in each of the Patents-in-Suit, including the right to sue for past infringement.

54. The ’880 Patent teaches novel systems and methods for creating a Layer 2 Virtual Private Network (L2VPN) over an Ethernet network with improved recovery and convergence times in the event of failures, such as physical link failure. The ’880 Patent’s claimed systems and methods combine specific hardware and software components in unconventional ways. In contrast, conventional systems relied on Spanning Tree Protocol (STP), which can take seconds to restore traffic, an unacceptable delay for internet service providers who require restoration times on the order of tens of milliseconds. Additionally, service providers faced challenges due to a lack of control and knowledge over the paths or routes within an L2VPN, which limited the control service providers had over route provisioning and dynamic routing after failure events.

55. Through its novel technological innovation, the ’880 Patent provides systems and methods to connect multiple sites through a series of Provider Backbone Trunks, specifically using

Provider Backbone Transport (PBT) or Provider Backbone Bridge Traffic Engineering (PBB-TE) trunks. This enables the creation of an L2VPN that includes these multiple sites within the PBB network. The invention provides a hierarchical L2VPN service that can operate over both PBB (metro networks) and VPLS (MPLS WAN networks), allowing for increased scalability, seamless interconnection between these technologies, and faster traffic recovery times from failures.

K.MIZRA'S PRE-LITIGATION COMMUNICATIONS WITH NOKIA

56. On or about March 5, 2024, K. Mizra sent letters to Nokia's Senior IP Counsel and Senior Corporate IP Counsel (the "Notice Letters") as a "notice to Nokia that use, offer for sale and sale of its products have and are continuing to infringe various claims of K. Mizra's patents."[2] In relevant part, the Notice Letters informed Nokia of its infringement of at least the '176, '320, '354, '249, and '880 Patents by way of attached infringement claim charts that detailed K.Mizra's allegations of infringement on an element-by-element basis for certain claims.[3]

FIRST CAUSE OF ACTION
(PATENT INFRINGEMENT UNDER 35 U.S.C. § 271 OF THE '176 PATENT)

57. K.Mizra re-alleges and incorporates by reference all of the foregoing paragraphs.

58. On information and belief, Nokia has infringed and continues to infringe, either literally or under the doctrine of equivalents, one or more claims, including at least claim 1 of the '176 Patent in violation of 35 U.S.C. §§ 271 et seq., directly and/or indirectly, by making, using, offering for sale, selling and/or importing the Accused Nokia Network Operations Instrumentalities, which include but are not limited to the Nokia Digital Operations Center, Nokia Orchestration Center, Nokia Assurance Center, Nokia Unified Inventory, Nokia Network Services

[2] True and correct copies of the March 5, 2024 letters from Charles Hausman of K.Mizra to Paul Lein and James Baillargeon of Nokia are attached hereto as Exhibit F.
[3] Exhibit F.

Platform (NSP), Nokia Services Director (NSD), Nokia E2E Network Slice Orchestrator, and all other substantially similar products, systems, solutions, and services.

59. For example, claim 9 of the '176 Patent recites the following:

> A method comprising:
>
> [1A] encapsulating, by a first node device of a first network associated with a first service provider identity, a data packet with a pseudowire label determined based on an application flow specified by an application header of the data packet; and
>
> [1B] selecting, based on the application flow, a routing policy from a set of application-specific routing policies defined for the first network,
>
> > [1B1] wherein the routing policy specifies that the data packet is to traverse at least a second network, comprising a second node device and associated with a second service provider identity, in transit to a third network comprising a third node device and associated with a third service provider identity.

60. On information and belief, and based on publicly available information, the Accused Nokia Network Operations Instrumentalities satisfy each and every limitation of at least claim 1 of the '176 Patent by providing network management and orchestration services and solutions to its customers. For example, the Nokia Digital Operations Center including the Nokia Orchestation Center "automates orchestration of end-to-end services, including 5G slice-based services, in cross-domain, multi-vendor and multi-technology networks. Together with Nokia Assurance Center, the cloud-native microservices-based Orchestration Center module enables round-trip operations automation as part of Nokia's Digital Operations Center."[4] A further example as shown below is Nokia's Network Services Platform (NSP) and its E2E Network Slice

[4] https://www.nokia.com/networks/bss-oss/nokia-orchestration-center (last visited November 20, 2024).

Orchestrator which is responsible for "concurrent delivery of differentiated 5G services and a key component of moving 5G use-cases toward a service-driven evolution that supports meeting SLAs deterministically across end-to-end network resources":

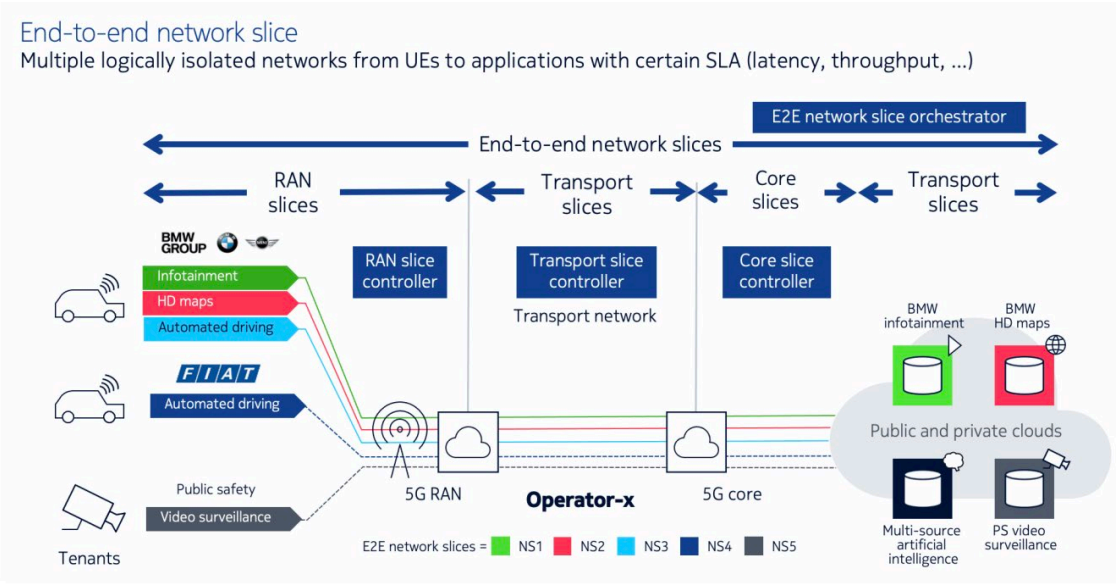

61. The Accused Nokia Network Operations Instrumentalities meet all the requirements of limitation 1A of claim 1. Limitation 1A requires the step of "encapsulating, by a first node device of a first network associated with a first service provider identity, a data packet with a pseudowire label determined based on an application flow specified by an application header of the data packet."

62. On information and belief, the Accused Nokia Network Operations Instrumentalities practice this limitation. For example, as discussed above, Nokia's Network Services Platform (NSP) and its Transport Slice Controller (TSC) provide traffic engineering and routing management across multiple networks such as a first network, second network and third

network, each associated with its respective service provider identity, as shown below.[5] As a further example, Nokia Services Director (NSD) "support[s] multi-domain E-Lines that span any mix of multiple MPLS and non-MPLS domains."[6]

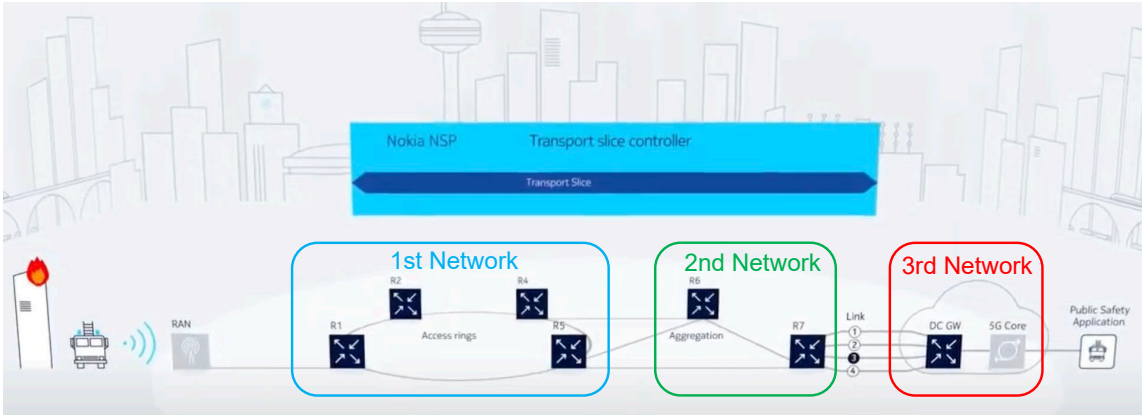

63. On information and belief, the first node device of the first network associated with a first service provider identity of the Accused Nokia Network Operations Instrumentalities encapsulates data packets with a pseudowire label. For example, Nokia's "multi-domain E-Line service also supports SDP-to-SDP connections through the use of pseudowire switching" and the "NSP calculates an optimal end-to-end path that traverses existing service tunnels."[7]

64. On information and belief, the Accused Nokia Network Operations Instrumentalities also meet all the requirements of limitation 1B of claim 1. Limitation 1B requires the step of "selecting, based on the application flow, a routing policy from a set of application-specific routing policies defined for the first network." For example, as discussed above, Nokia's

[5] https://www.youtube.com/watch?v=Nm8BpB5mkKQ (Nokia 5G Slicing with IP Routing and SDN Video) (last visited November 20, 2024) (annotations added)
[6] https://documentation.nokia.com/cgi-bin/dbaccessfilename.cgi/3HE14122AAABTQZZA01_V1_NSP%20NSD%20and%20NRC%2018.6%20User%20Guide.pdf (Nokia Network Service Platform User Guide, p.58) (last visited November 20, 2024).
[7] *Id.*

Network Services Platform (NSP) and its Transport Slice Controller (TSC) provides traffic engineering and routing management across multiple networks such as a first network, second network and third network.[8] In this example, as shown below, the Nokia Operations Center defines a Class of Service (CoS) policy, e.g., application-specific routing policy for each application flow (e.g., Voice, Data, Control, Video, etc.) such that the routing policy is based on the application flow.[9]

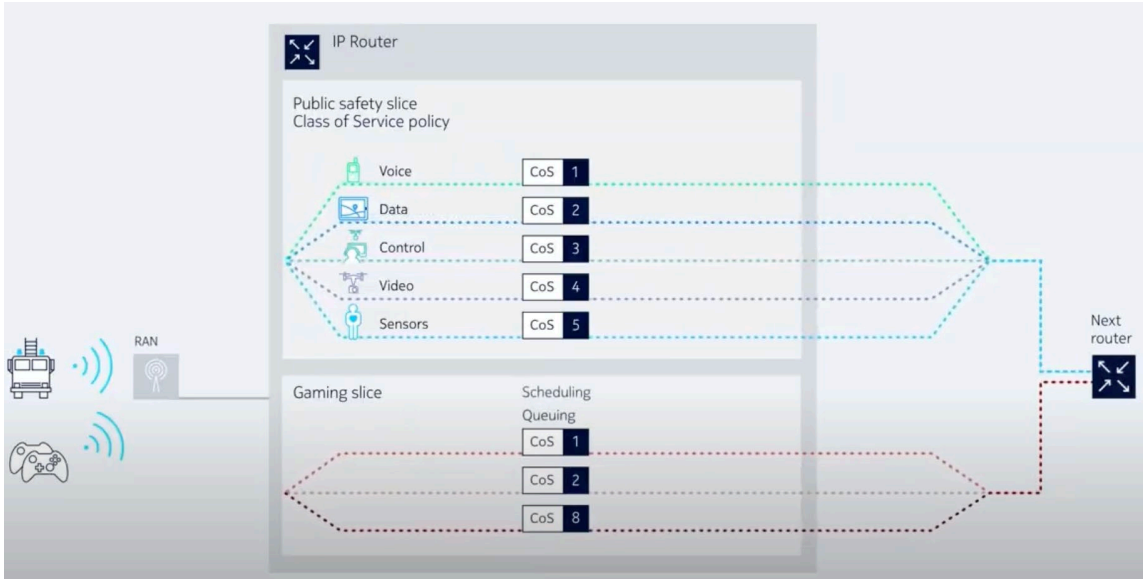

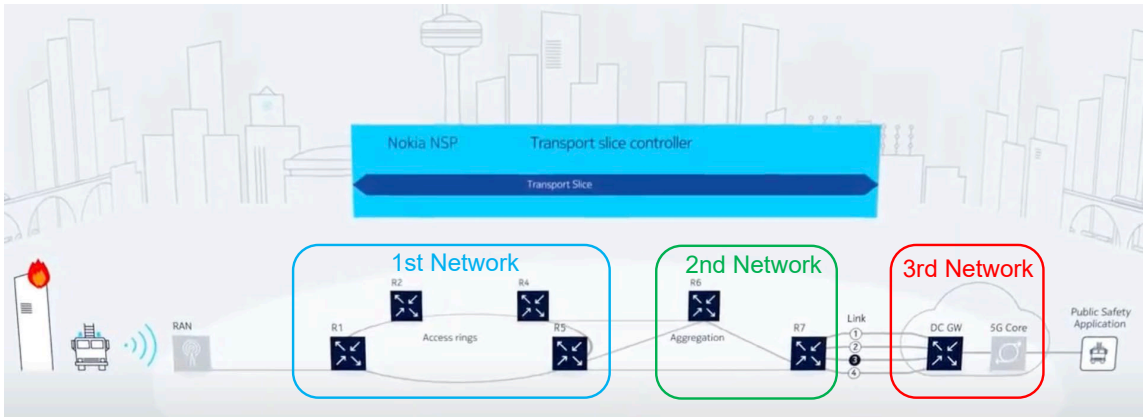

[8] https://www.youtube.com/watch?v=Nm8BpB5mkKQ (Nokia 5G Slicing with IP Routing and SDN Video) (last visited November 20, 2024)
[9] *Id.*

65. The Accused Nokia Network Operations Instrumentalities also meet all the requirements of limitation 1B1 of claim 1. Limitation 1B1 further recites "wherein the routing policy specifies that the data packet is to traverse at least a second network, comprising a second node device and associated with a second service provider identity, in transit to a third network comprising a third node device and associated with a third service provider identity." On information and belief, the Accused Nokia Network Operations Instrumentalities also meet the requirements of this limitation. For example, as discussed and illustrated above, the routing policies specify the rout that the data packets traverse from a first network (e.g., access network) over a second network (e.g., aggregation network) to a third network (e.g., core network).[10]

66. Accordingly, on information and belief and based on publicly available information, the Accused Nokia Network Operations Instrumentalities and Nokia's operation and/or maintenance of those Instrumentalities meet all the limitations of, and therefore infringe, at least claim 1 of the '176 Patent.

67. Nokia was not licensed or otherwise authorized by K.Mizra to make, use, import, sell, or offer to sell any products and/or services covered by the '176 Patent, and Nokia's conduct is, in every instance, without K.Mizra's consent.

68. Nokia undertook the infringing actions despite an objectively high likelihood that such activities infringe the '176 Patent, which has been duly issued by the USPTO and presumed valid.

69. Nokia is and has been on notice of the infringement of the '176 Patent at least as of March 5, 2024, when K.Mizra sent correspondence to Nokia identifying the Accused Nokia

[10] *Id.*

Network Operations Instrumentalities and detailing its infringement of the ’176 Patent.

70. Since at least the date of first learning of the ’176 Patent, which is no later than the date of the Notice Letters as detailed herein, Nokia has continued its infringing activities. As such, Nokia has willfully infringed the ’176 Patent.

71. Since at least the date of first learning of the ’176 Patent, which is no later than the date of the Notice Letters as detailed herein, Nokia has also indirectly infringed and continues to indirectly infringe the ’176 Patent in violation of 35 U.S.C. § 271(b). Nokia has actively induced, for example, its customers such as network service providers to directly infringe the ’176 Patent by performing the method of claim 1 as detailed above throughout the United States, including within this Judicial District, by, among other things, advertising and promoting the use of the Accused Nokia Network Operations Instrumentalities in various websites, including providing and disseminating product descriptions, operating manuals, technical documentation, instructional and/or informational videos, and other instructions on how to implement the Accused Nokia Network Operations Instrumentalities. Examples of such advertising, promotion, and/or instruction include without limitation the documents and videos cited in the paragraphs above. Nokia did so knowing and intending that its customers and end users commit these infringing acts, despite its knowledge of the ’176 Patent, thereby specifically intending for and inducing its customers to infringe the ’176 Patent through the customers’ normal and customary use of the Accused Nokia Network Operations Instrumentalities.

72. As a result of Nokia’s infringement of the ’176 Patent, K.Mizra has suffered and continues to suffer substantial injury and is entitled to recover all damages caused by Nokia’s infringement to the fullest extent permitted by the Patent Act, together with prejudgment interest and costs for Nokia’s wrongful conduct.

SECOND CAUSE OF ACTION
(PATENT INFRINGEMENT UNDER 35 U.S.C. § 271 OF THE '320 PATENT)

73. K.Mizra re-alleges and incorporates by reference all of the foregoing paragraphs.

74. On information and belief, Nokia has infringed and continues to infringe, either literally or under the doctrine of equivalents, one or more claims, including at least claim 1 of the '320 Patent in violation of 35 U.S.C. §§ 271 et seq., directly and/or indirectly, by making, using, offering for sale, selling and/or importing the Accused Nokia Network Operations Instrumentalities, which include but are not limited to the Nokia Digital Operations Center, Nokia Orchestration Center, Nokia Assurance Center, Nokia Unified Inventory, Nokia Network Services Platform (NSP), Nokia Services Director (NSD), Nokia E2E Network Slice Orchestrator, and all other substantially similar products, systems, solutions, and services.

75. For example, claim 1 of the '320 Patent recites the following:

> A method comprising:
>
> [1A] at a node associated with a multiprotocol label switching system (MPLS) network, performing:
>
> > [1A1] identifying information associated with an application flow based on one or more unencapsulated packet headers of the application flow or based on an ingress data stream that includes the application flow;
> >
> > [1A2] in response to identifying the information, and based on stored data that maps application flows with psuedowires, determining a plurality of pseudowires corresponding to paths through the MPLS network, wherein the stored data indicates, for a sending device application, a distributed mapping of the application flow via at least one of the plurality of psuedowires; and
> >
> > [1A3] communicating data related to the sending device application via at least one of the plurality of pseudowires.

76. On information and belief, and based on publicly available information, the

Accused Nokia Network Operations Instrumentalities satisfy each and every limitation of at least claim 1 of the '320 Patent by providing network management and orchestration services and solutions to its customers. For example, Nokia Services Director (NSD) "uses operator-defined policies to guide dynamic resource selection and automated provisioning. These policies use a real-time view of the network (including link and tunnel utilization) to map service connection requests to the best available tunnel/paths (Layer 0 to Layer 3) that meet the customer's Service Level Agreement (SLA) requirements and the operator's network efficiency goals."[11] The Nokia Services Platform (NSP) features the "IP/MPLS Optimization application [which] leverages centralized, intelligent network control capabilities so that operators can rapidly adapt to changing demand and traffic patterns and run their networks more efficiently."[12]

77. The Accused Nokia Network Operations Instrumentalities meet the requirements of limitation 1A of claim 1. Limitation 1A requires certain steps (further recited in limitations 1A1 to 1A3) to be performed "at a node associated with a multiprotocol label switching system (MPLS) network, performing." On information and belief, the Accused Nokia Network Operations Instrumentalities satisfy this limitation. For example, as shown below, "NSP [Nokia Services Platform] deployments include MPLS routers or nodes.[13]

---

[11] https://documentation.nokia.com/cgi-bin/dbaccessfilename.cgi/3HE14122AAABTQZZA01_V1_NSP%20NSD%20and%20NRC%2018.6%20User%20Guide.pdf (Nokia Services Platform User Guide, p.42) (last visited November 20, 2024).

[12] https://documentation.nokia.com/cgi-bin/dbaccessfilename.cgi/3HE17268AAADTQZZA_V1_NSP%2021.11%20IPMPLS%20Optimization%20Application%20Help.pdf (Nokia Services Platform IP/MPLS Optimization Application Help, p.5) (last visited November 20, 2024).

[13] https://documentation.nokia.com/cgi-bin/dbaccessfilename.cgi/3HE14122AAABTQZZA01_V1_NSP%20NSD%20and%20NRC%2018.6%20User%20Guide.pdf (Nokia Services Platform User Guide, p.20) (last visited November 20, 2024) (drawing added).

Figure 3-1 NSP deployment on virtual machines with all NSD and NRC modules

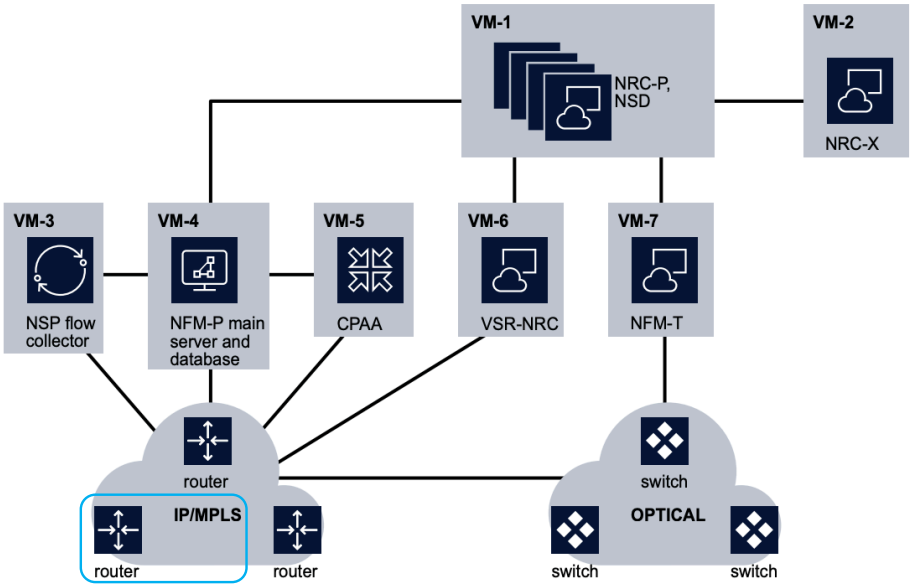

78. Claim 1 further recites limitation 1A1 which requires the step of "identifying information associated with an application flow based on one or more unencapsulated packet headers of the application flow or based on an ingress data stream that includes the application flow." On information and belief, the Accused Nokia Network Operations Instrumentalities also satisfy this limitation. For example, as illustrated below and as stated in Nokia's video on network slicing, "using its Path Computation Element (PCE) function, the NSP computes the best path across the backhaul network for each of the customer's five applications based on their requirements. For each of these paths, the PCE downloads a service label and other routing labels to the ingress router. The service label identifies that it is one of the applications of the Public Safety slice. These labels can be specific if you have load balancing or latency requirements."[14]

[14] https://www.youtube.com/watch?v=Nm8BpB5mkKQ (Nokia 5G Slicing with IP Routing and SDN Video) (last visited November 20, 2024)

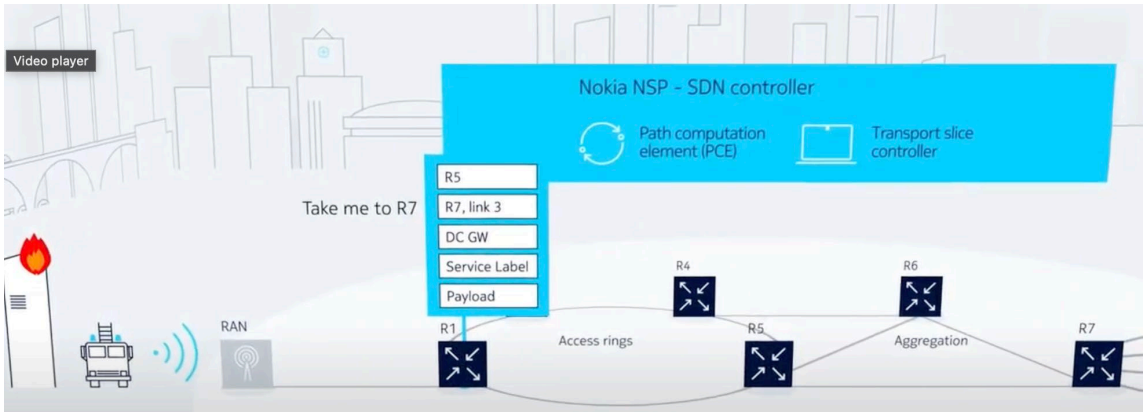

79. Claim 1 further recites limitation 1A2, which requires the step of "in response to identifying the information, and based on stored data that maps application flows with psuedowires, determining a plurality of pseudowires corresponding to paths through the MPLS network, wherein the stored data indicates, for a sending device application, a distributed mapping of the application flow via at least one of the plurality of psuedowires."

80. On information and belief, the Accused Nokia Network Operations Instrumentalities also satisfy this limitation. For example, Nokia's "NSD supports multi-domain E-Lines that span any mix of MPLS and non-MPLS domains. The service tunnels must be already created I the MPLS domains." Further, Nokia's "multi-domain E-Line service also supports SDP-to-SDP connections through the use of pseudowire switching […] the NEs eligible for SDP-to-SDP pseudowire switching must be preconfigured with a pw-switching flag" and the "NSP calculates an optimal end-to-end path that traverses existing service tunnels."[15] Nokia's NSD uses a plurality of pseudowires corresponding to data paths through the MPLS network. For example, "NSD supports the creating of E-Line service with MC-LAG termination and pseudowire

[15] https://documentation.nokia.com/cgi-bin/dbaccessfilename.cgi/3HE14122AAABTQZZA01_V1_NSP%20NSD%20and%20NRC%2018.6%20User%20Guide.pdf (Nokia Network Service Platform User Guide, p.60) (last visited November 20, 2024).

redundancy" between various endpoint types.[16]

81. Claim further recites limitation 1A3, which requires the step of "communicating data related to the sending device application via at least one of the plurality of pseudowires." On information and belief, the Accused Nokia Network Operations Instrumentalities satisfy this limitation. For example, as discussed above, the Accused Nokia Network Operations Instrumentalities communicate data related to the specified application flow using at least one of the pseudowires.

82. Accordingly, on information and belief and based on publicly available information, the Accused Nokia Network Operations Instrumentalities and Nokia's operation and/or maintenance of those Instrumentalities meet all the limitations of, and therefore infringe, at least claim 1 of the '320 Patent.

83. Nokia was not licensed or otherwise authorized by K.Mizra to make, use, import, sell, or offer to sell any products and/or services covered by the '320 Patent, and Nokia's conduct is, in every instance, without K.Mizra's consent.

84. Nokia undertook the infringing actions despite an objectively high likelihood that such activities infringe the '320 Patent, which has been duly issued by the USPTO and presumed valid.

85. Nokia is and has been on notice of the infringement of the '320 Patent at least as of March 5, 2024, when K.Mizra sent correspondence to Nokia identifying the Accused Nokia Network Operations Instrumentalities and detailing its infringement of the '320 Patent.

---

[16] https://documentation.nokia.com/cgi-bin/dbaccessfilename.cgi/3HE14122AAABTQZZA01_V1_NSP%20NSD%20and%20NRC%2018.6%20User%20Guide.pdf (Nokia Network Service Platform User Guide, p.58) (last visited November 20, 2024).

86. Since at least the date of first learning of the ’320 Patent, which is no later than the date of the Notice Letters as detailed herein, Nokia has continued its infringing activities. As such, Nokia has willfully infringed the ’320 Patent.

87. Since at least the date of first learning of the ’320 Patent, which is no later than the date of the Notice Letters as detailed herein, Nokia has also indirectly infringed and continues to indirectly infringe the ’320 Patent in violation of 35 U.S.C. § 271(b). Nokia has actively induced, for example, its customers such as network service providers to directly infringe the ’320 Patent by performing the method of claim 1 as detailed above throughout the United States, including within this Judicial District, by, among other things, advertising and promoting the use of the Accused Nokia Network Operations Instrumentalities in various websites, including providing and disseminating product descriptions, operating manuals, technical documentation, instructional and/or informational videos, and other instructions on how to implement the Accused Nokia Network Operations Instrumentalities. Examples of such advertising, promotion, and/or instruction include without limitation the documents and videos cited in the paragraphs above. Nokia did so knowing and intending that its customers and end users commit these infringing acts, despite its knowledge of the ’320 Patent, thereby specifically intending for and inducing its customers to infringe the ’320 Patent through the customers’ normal and customary use of the Accused Nokia Network Operations Instrumentalities.

88. As a result of Nokia’s infringement of the ’320 Patent, K.Mizra has suffered and continues to suffer substantial injury and is entitled to recover all damages caused by Nokia’s infringement to the fullest extent permitted by the Patent Act, together with prejudgment interest and costs for Nokia’s wrongful conduct.

THIRD CAUSE OF ACTION
(PATENT INFRINGEMENT UNDER 35 U.S.C. § 271 OF THE '354 PATENT)

89. K.Mizra re-alleges and incorporates by reference all of the foregoing paragraphs.

90. On information and belief, Nokia has infringed and continues to infringe, either literally or under the doctrine of equivalents, one or more claims, including at least claim 9 of the '354 Patent in violation of 35 U.S.C. §§ 271 et seq., directly and/or indirectly, by making, using, offering for sale, selling and/or importing the Accused Nokia Router Instrumentalities, which include but are not limited to the Nokia Service Router Operation System (SR OS), Nokia BGP VPLS Solution, and the Nokia Portfolio of physical and virtualized routers such as the 7750 SR, 7710 SR, 710 SR, 7450 ESS series, 7x50 SR/ESS, and all other substantially similar products, systems, solutions, and services

91. For example, claim 9 of the '354 Patent recites the following:

> A provider edge device comprising:
>
> [9A] a memory that stores computer-executable instructions; and
>
> [9B] a processor, communicatively coupled to the memory, that executes or facilitates execution of the computer-executable instructions to at least:
>
> > [9B1] identify a service instance identifiers and a customer virtual local area network identifier in a frame;
> >
> > [9B2] identify a service associated with the frame based on service mapping data that defines mappings between available services, including the service, and corresponding combinations of values of the service instance identifier and the customer virtual local area network identifier;
> >
> > [9B3] format the frame according to the service to obtain a service frame; and
> >
> > [9B4] transfer the service frame between a provider backbone bridge network device and a multiprotocol label switching network device.

92. On information and belief, and based on publicly available information, the Accused Nokia Router Instrumentalities satisfy each and every limitation of at least claim 9 of the '354 Patent by providing Provider Backbone Bridging (PBB) services and solutions in an MPLS network. For example, as detailed below, Nokia's Service Routers (SR) support the PBB-VPLS model, which "combines the best of the PBB and VPLS technologies to deliver the most scalable multi-point Layer 2 VPN in the market. PBB-VPLS inherits all the benefits derived from MPLS (for example, sub-50ms FRR protection, traffic engineering, no need for MSTP in the backbone) while greatly increasing the scalability of the network by providing MAC hiding, service multiplexing and pseudowire aggregation."[17]

93. On information and belief, the Accused Nokia Router Instrumentalities meet the preamble of claim 9 which recites "a provider edge device." For example, the Nokia 7750 Service Router (SR) portfolio includes service routers that serve as a "Provider edge router (PE)."[18] Nokia states that "[f]or service providers, the 7750 SR is deployed in mission-critical WAN, data center and aggregation networks to support IP edge, gateway, and core functions for advanced residential mobile and enterprise services, including: […] Enterprise VPN services: IP aggregation, provider edge (PE), internet access, and cloud and data center interconnect (DCI) services."[19]

94. On information and belief, the Accused Nokia Router Instrumentalities also meet

[17] https://documentation.nokia.com/html/0_add-h-f/93-0267-HTML/7X50_Advanced_Configuration_Guide/PBB-VPLS.html#1015575 (last visited November 20, 2024).
[18] https://www.nokia.com/networks/ip-networks/7750-service-router/ (last visited November 20, 2024).
[19] https://www.nokia.com/asset/164728 (Nokia 7750 Service Router Datasheet, p.4) (last visited November 20, 2024).

all the requirements of limitation 9A of claim 9. Limitation 9A recites "a memory that stores computer-executable instructions." For example, Nokia states that "[t]he 7750 SR leverages the latest generation of Nokia IP routing silicon, FP4, which combines a disaggregated, fully buffered chipset architecture and intelligent memory design to provide deterministic packet forwarding performance at scale, without compromise, even when complex processing-intensive operations are required."[20]

95. On information and belief, the Accused Nokia Router Instrumentalities also meet all the requirements of limitation 9B of claim 9. Limitation 9B recites "a processor, communicatively coupled to the memory, that executes or facilitates execution of the computer-executable instructions." As mentioned above, Nokia's 7750 SR features Nokia IP routing silicon such as FP4 and FP5 network processors, which on information and belief, includes a processor coupled to the memory that executes computer-readable instructions that perform the claimed functionality detailed below.[21] Further, Nokia's 7750 SR includes or supports hot-swappable modules such as Switch Fabric Modules and Integrated Service Modules.[22]

96. On information and belief, the Accused Nokia Router Instrumentalities meet all the requirements of limitation 9B1 of claim 9. Limitation 9B1 requires the provider edge device to "identify a service instance identifier and a customer virtual local area network identifier specified in a frame." As illustrated below in Nokia's PBB-VPLS solution, its provider edge nodes transfer data between a Provider Backbone Bridge (PBB) network and a Multiprotocol Label Switching

[20] *Id*. (Nokia 7750 Service Router Datasheet, p.2)
[21] https://www.nokia.com/networks/ip-networks/7750-service-router/ (Nokia 7750 Service Router Datasheet,) (last visited, November 20, 2024).
[22] *Id*. (p.2)

(MPLS) network such as the "VPLS/MPLS Core."[23] Further as shown below, the provider edge device (PE) identifies various identifiers in its encapsulation including a service instance identifier (I-TAG) and a customer virtual local area network identifier (C-VID) specified in a frame of data.

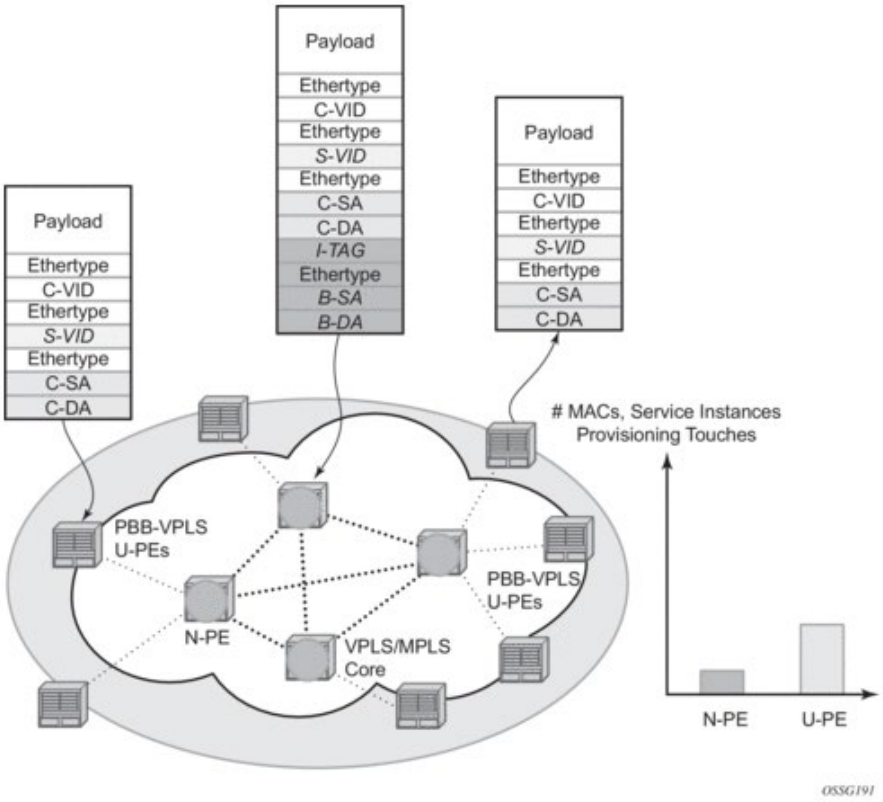

97. Claim 9 further recites limitation 9B2, which requires the provider edge device to "identify a service associated with the frame based on service mapping data that defines mappings between available services, including the service, and corresponding combinations of values of the service instance identifier and the customer virtual local area network identifier." On information and belief, the Accused Nokia Router Instrumentalities also satisfy this limitation. For example,

23 https://infocenter.nokia.com/public/7750SR150R1A/index.jsp?topic=%2Fcom.sr.l2%2Fhtml%2Fpbb.html (last visited November 20, 2024).

in the configurations shown below, a service such as "VPLS 100 ivpls" or "epipe 200" are mapped in part to specific service identifiers such as "isid100" or "isid200."[24]

4.3.23.1.1. Configuration Examples

This section gives usage examples for the new commands under PBB Epipe or IVPLS instances.

PBB IVPLS usage:

Example:

```
configure service vpls 100 ivpls
   sap 1/1/1:101
   pbb
      backbone-vpls 10 isid 100
      force-qtag-forwarding
```

PBB Epipe Usage:

Example:

```
configure service epipe 200
   sap 1/1/1:201
   pbb
      tunnel 10 backbone-dest-mac ab-bc-cd-ef-01-01 isid 200
      force-qtag-forwarding
```

98. Nokia further describes the use of customer virtual local area network (VLAN) identifiers, e.g., C-VID or VLAN tags, for mapping a services.[25]

---

[24] https://infocenter.nokia.com/public/7750SR150R1A/index.jsp?topic=%2Fcom.sr.l2%2Fhtml%2Fpbb.html (last visited November 20, 2024).

[25] https://documentation.nokia.com/html/0_add-h-f/93-0267-HTML/7X50_Advanced_Configuration_Guide/PBB-VPLS.html#1015575 (last visited November 20, 2024).

Existing SAP processing rules still apply for the I-VPLS case; the SAP encapsulation definition on Ethernet ingress ports defines which VLAN tags are used to determine the service that the packet belongs to:

- Null encapsulation defined on ingress — Any VLAN tags are ignored and the packet goes to a default service for the SAP;
- Dot1q encapsulation defined on ingress — only first VLAN tag is considered;
- QinQ encapsulation defined on ingress — both VLAN tags are considered; wildcard for the inner VLAN tag is supported.
- For dot1q/qinq encapsulations, traffic encapsulated with VLAN tags for which there is no definition is discarded.
- Note that any VLAN tag used for service selection on the I-SAP is stripped before the PBB encapsulation is added. Appropriate VLAN tags are added at the remote PBB PE when sending the packet out on the egress SAP.

99. Claim 9 recites limitation 9B3, which requires the provider edge device to "format the frame according to the service to obtain a service frame." On information and belief, the Accused Nokia Router Instrumentalities also satisfy this limitation. For example, as shown below, the Nokia provider edge router formats the frame of data.[26]

[26] https://infocenter.nokia.com/public/7750SR150R1A/index.jsp?topic=%2Fcom.sr.l2%2Fhtml%2Fpbb.html (last visited November 20, 2024).

4.3.5. PBB Packet Walkthrough

This section describes the walkthrough for a packet that traverses the B-VPLS and I-VPLS instances using the example of a unicast frame between two customer stations as depicted in the following network diagram Figure 108.

Figure 108: PBB Packet Walkthrough

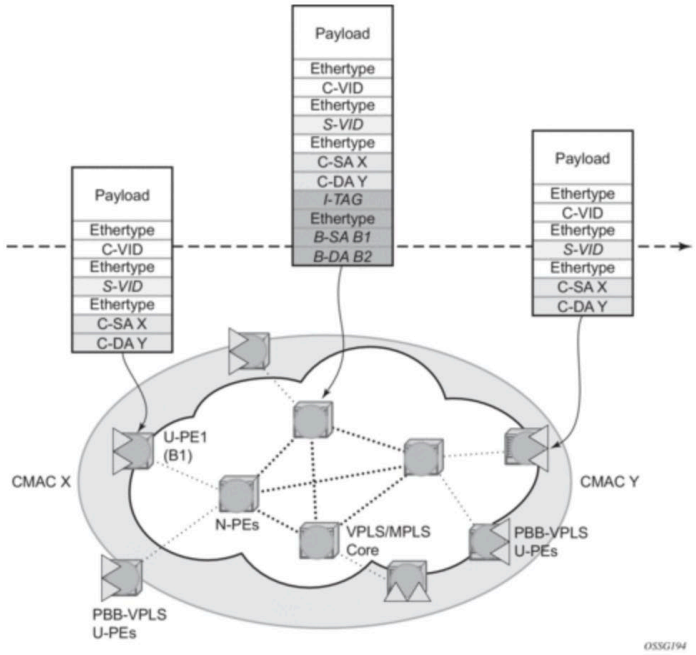

100. Claim 9 further recites limitation 9B4, which requires the provider edge device to "transfer the service frame between a provider backbone bridge network device and a multiprotocol label switching network device." On information and belief, the Accused Nokia Router Instrumentalities also satisfy this limitation. For example, as illustrated below in Nokia's PBB-VPLS solution, its provider edge (PE) nodes transfer data between a Provider Backbone Bridge (PBB) network and a Multiprotocol Label Switching (MPLS), e.g., VPLS, network such as the "VPLS/MPLS Core."[27]

27 https://infocenter.nokia.com/public/7750SR150R1A/index.jsp?topic=%2Fcom.sr.l2%2Fhtml%2Fpbb.html (last visited November 20, 2024).

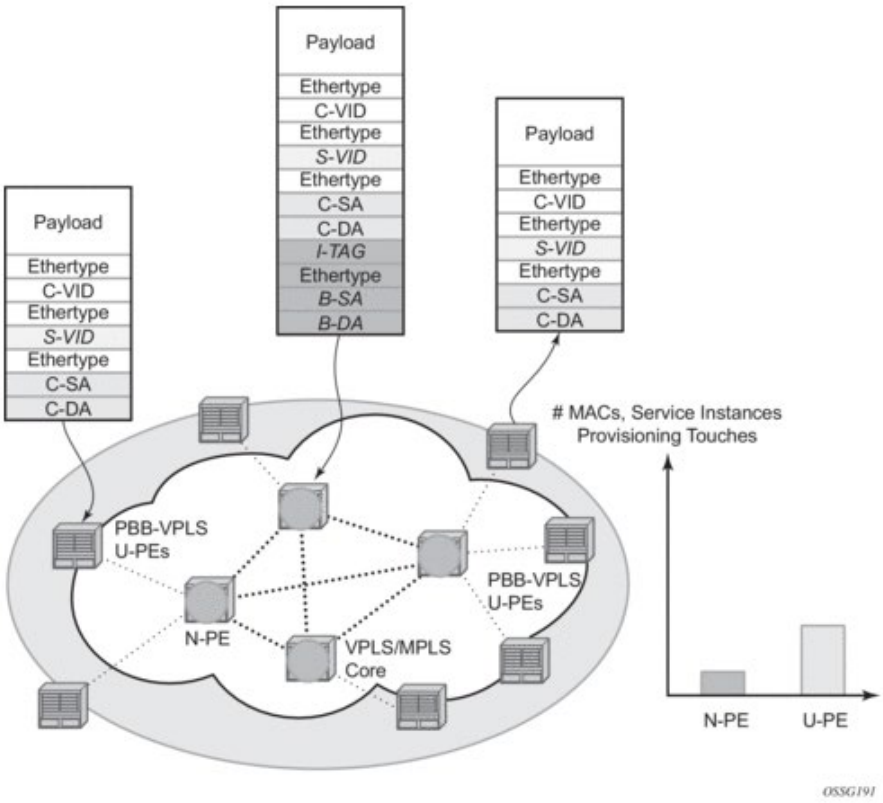

101. Accordingly, on information and belief and based on publicly available information, the Accused Nokia Router Instrumentalities meet all the limitations of, and therefore infringe, at least claim 9 of the ’354 Patent.

102. Nokia was not licensed or otherwise authorized by K.Mizra to make, use, import, sell, or offer to sell any products and/or services covered by the ’354 Patent, and Nokia’s conduct is, in every instance, without K.Mizra’s consent.

103. Nokia undertook the infringing actions despite an objectively high likelihood that such activities infringe the ’354 Patent, which has been duly issued by the USPTO and presumed valid.

104. Nokia is and has been on notice of the infringement of the ’354 Patent at least as of March 5, 2024, when K.Mizra sent correspondence to Nokia identifying the Accused Nokia Router

Instrumentalities and detailing its infringement of the ’354 Patent.

105. Since at least the date of first learning of the ’354 Patent, which is no later than the date of the Notice Letters as detailed herein, Nokia has continued its infringing activities. As such, Nokia has willfully infringed the ’354 Patent.

106. Since at least the date of first learning of the ’354 Patent, which is no later than the date of the Notice Letters as detailed herein, Nokia has also indirectly infringed and continues to indirectly infringe the ’354 Patent in violation of 35 U.S.C. § 271(b). Nokia has actively induced, for example, its customers such as network service providers to directly infringe the ’354 Patent by configuring the provider edge device of claim 9 as detailed above throughout the United States, including within this Judicial District, by, among other things, advertising and promoting the use of the Accused Nokia Network Operations Instrumentalities in various websites, including providing and disseminating product descriptions, operating manuals, technical documentation, instructional and/or informational videos, and other instructions on how to implement the Accused Nokia Network Operations Instrumentalities. Examples of such advertising, promotion, and/or instruction include without limitation the documents cited in the paragraphs above. Nokia did so knowing and intending that its customers and end users commit these infringing acts, despite its knowledge of the ’354 Patent, thereby specifically intending for and inducing its customers to infringe the ’354 Patent through the customers’ normal and customary implementation of the Accused Nokia Network Operations Instrumentalities.

107. Since at least the date of first learning of the ’354 Patent, which is no later than the date of the Notice Letters as detailed herein, Nokia has also indirectly infringed and continues to indirectly infringe the ’354 Patent by contributory infringement in violation of 35 U.S.C. § 271(c). Nokia contributorily infringes the ’354 Patent by offering to sell, selling, or importing into the

United States, components of the Accused Nokia Router Instrumentalities, which include non-standard hardware and software, knowing the same to be especially made or especially adapted for use in infringement of the ’354 Patent, and not a staple article or commodity of commerce suitable for substantial non-infringing use.

108. As a result of Nokia’s infringement of the ’354 Patent, K.Mizra has suffered and continues to suffer substantial injury and is entitled to recover all damages caused by Nokia’s infringement to the fullest extent permitted by the Patent Act, together with prejudgment interest and costs for Nokia’s wrongful conduct.

FOURTH CAUSE OF ACTION
(PATENT INFRINGEMENT UNDER 35 U.S.C. § 271 OF THE ’249 PATENT)

109. K.Mizra re-alleges and incorporates by reference all of the foregoing paragraphs.

110. On information and belief, Nokia has infringed and continues to infringe, either literally or under the doctrine of equivalents, one or more claims, including at least claim 7 of the ’249 Patent in violation of 35 U.S.C. §§ 271 et seq., directly and/or indirectly, by making, using, offering for sale, selling and/or importing the Accused Nokia Router Instrumentalities, which include but are not limited to the Nokia Service Router Operation System (SR OS), Nokia BGP VPLS Solution, and the Nokia Portfolio of physical and virtualized routers such as the 7750 SR, 7710 SR, 710 SR, 7450 ESS series, 7x50 SR/ESS, and all other substantially similar products, systems, solutions, and services

111. For example, claim 7 of the ’249 Patent recites the following:

> A system comprising:
>
> [7A] a memory that stores computer-executable instructions;

> [7B] a processor, communicatively coupled to the memory, that executes or facilitates execution of the computer executable instructions to at least:
>
> > [7B1] receive acknowledgement data informing of an acceptance, by a destination node device, of pseudowire configuration data sent to the destination node by a source node device
> >
> > > [7B1-1] wherein the pseudowire configuration data defines at least a priority, a domain type, and a standby mode for a standby pseudowire
> > >
> > > [7B1-2] wherein the domain type indicates whether a plurality of node devices comprising the standby pseudowire are coupled to a single carrier network or multiple carrier networks;
> >
> > [7B2] in response to receipt of the acknowledgement data, establish the standby pseudowire between the source node device and the destination node device based on the standby mode and domain type defined by the pseudowire configuration data; and
> >
> > [7B3] determine whether to initiate a preemption of network traffic on the standby pseudowire based at least in part on the priority of the standby pseudowire.

112. On information and belief, and based on publicly available information, the Accused Nokia Router Instrumentalities satisfy each and every limitation of at least claim 7 of the '354 Patent. For example, as detailed below, the Nokia's Service Routers feature "Pseudowire Redundancy and VPLS link redundancy [which] extends link-level resiliency for pseudowires and VPLS to protect critical network paths against physical link or node failures.[28] Nokia also states that its Service Routers feature "Pseudowire redundancy" which "provides the ability to protect a

[28] https://documentation.nokia.com/cgi-bin/dbaccessfilename.cgi/3HE11970AAABTQZZA01_V1_7450%20ESS%207750%20SR%207950%20XRS%20and%20VSR%20Layer%202%20Services%20and%20EVPN%20Guide:%20VLL%20VPLS%20PBB%20and%20EVPN%20R15.0.R4.pdf (Nokia Service Router Layer 2 Services and EVPN Guide, p.82) (last visited November 20, 2024).

pseudowire with a pre-provisioned secondary standby pseudowire and to switch traffic over to that secondary standby pseudowire in case of a SAP and, or network failure condition."[29]

113. On information and belief, the Accused Nokia Router Instrumentalities meet the preamble of claim 7, which recites a system. For example, Nokia provides physical and virtualized Service Routers and Service Router Operating System (SR OS) deployed in ethernet and IP/MPLS (Internet Protocol / Multiprotocol Label Switching) networks for service providers, enterprise customers, and webscale networks.[30]

114. On information and belief, the Accused Nokia Router Instrumentalities meet limitation 7A of claim 7, which recites a memory that stores computer-executable instructions. For example, Nokia states that "[t]he 7750 SR leverages the latest generation of Nokia IP routing silicon, FP4, which combines a disaggregated, fully buffered chipset architecture and intelligent memory design to provide deterministic packet forwarding performance at scale, without compromise, even when complex processing-intensive operations are required."[31]

115. On information and belief, the Accused Nokia Router Instrumentalities meet limitation 7B of claim 7, which recites a processor, communicatively coupled to the memory, that executes or facilitates execution of the computer executable instructions. As mentioned above, Nokia's 7750 SR features Nokia IP routing silicon such as FP4 and FP5 network processors, which on information and belief, includes a processor coupled to the memory that executes computer-

[29] https://documentation.nokia.com/cgi-bin/dbaccessfilename.cgi/3HE11970AAABTQZZA01_V1_7450%20ESS%207750%20SR%207950%20XRS%20and%20VSR%20Layer%202%20Services%20and%20EVPN%20Guide:%20VLL%20VPLS%20PBB%20and%20EVPN%20R15.0.R4.pdf (Nokia Service Router Layer 2 Services and EVPN Guide, p.62) (last visited November 20, 2024).
[30] https://www.nokia.com/networks/ip-networks/service-router-operating-system-nos/ (last visited November 20, 2024).
[31] *Id*. (Nokia 7750 Service Router Datasheet, p.2)

readable instructions that perform the claimed functionality detailed below.[32] Further, Nokia's 7750 SR includes or supports hot-swappable modules such as Switch Fabric Modules and Integrated Service Modules.[33]

116. On information and belief, the Accused Nokia Router Instrumentalities meet all the requirements of limitation 7B1 of claim 7. Limitation 7B1 requires the system to "receive acknowledgement data informing of an acceptance, by a destination node device, of pseudowire configuration data sent to the destination node by a source node device." For example, Nokia Service Routers are implemented for Layer 2 services such as Virtual Leased Line (VLL) which feature VLL Resilience with Pseudowire Switching.[34] On information and belief, the VLL Resilience feature uses standby pseudowires where a source node such as T-PE-1 sends configuration data to a destination node such as T-PE-2 and receives acknowledgement data of acceptance by the destination node.[35]

---

[32] https://www.nokia.com/networks/ip-networks/7750-service-router/ (Nokia 7750 Service Router Datasheet,) (last visited, November 20, 2024).
[33] *Id*. (p.2)
[34] https://documentation.nokia.com/cgi-bin/dbaccessfilename.cgi/3HE18387AAACTQZZA01_V1_7450%20ESS%207750%20SR%207950%20XRS%20and%20VSR%20Layer%202%20Services%20and%20EVPN%20Guide%2022.7.R1.pdf (Nokia Layer 2 Services and EVPN Guide, p.81) (last visited November 20, 2024).
[35] https://documentation.nokia.com/cgi-bin/dbaccessfilename.cgi/3HE18387AAACTQZZA01_V1_7450%20ESS%207750%20SR%207950%20XRS%20and%20VSR%20Layer%202%20Services%20and%20EVPN%20Guide%2022.7.R1.pdf (Nokia Layer 2 Services and EVPN Guide, p.81) (last visited November 20, 2024).

Figure 28: VLL resilience with pseudowire switching

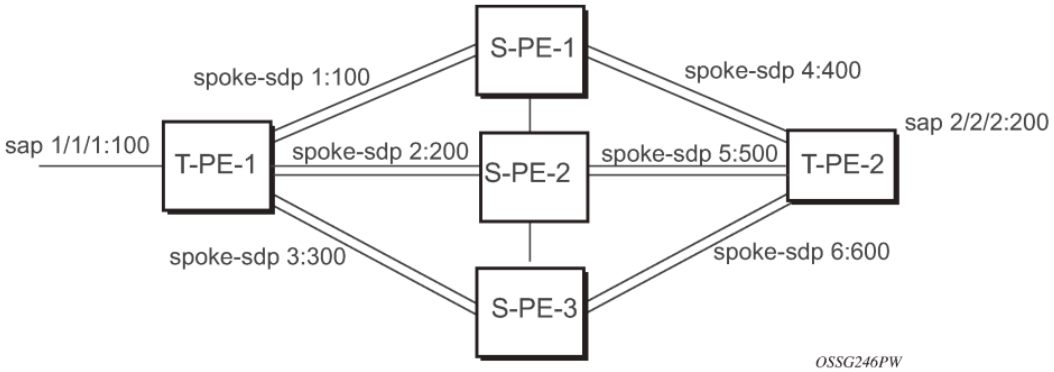

117. On information and belief, the Accused Nokia Router Instrumentalities meet all the requirements of limitation 7B1-1 of claim 7. Limitation 7B1-1 requires that "the pseudowire configuration data defines at least a priority, a domain type, and a standby mode for a standby pseudowire." For example, as shown below, the pseudowire configuration for the standby pseudowire path between the source node T-PE-1 and destination node T-PE-2 includes a priority such as "precedence 1" and a standby mode for the pseudowire path (e.g., spoke-sdp 2:200 and spoke-sdp 5:500).[36]

[36] https://documentation.nokia.com/cgi-bin/dbaccessfilename.cgi/3HE18387AAACTQZZA01_V1_7450%20ESS%207750%20SR%207950%20XRS%20and%20VSR%20Layer%202%20Services%20and%20EVPN%20Guide%2022.7.R1.pdf (Nokia Layer 2 Services and EVPN Guide, p.81) (last visited November 20, 2024).

```
T-PE-1
configure service epipe 1
   endpoint X
   exit
   endpoint Y
   revert-time 100
   standby-signaling-master
   exit
   sap 1/1/1:100 endpoint X
   spoke-sdp 1:100 endpoint Y
      precedence primary
   spoke-sdp 2:200 endpoint Y
      precedence 1
   spoke-sdp 3:300 endpoint Y
      precedence 1
```

```
T-PE-2
configure service epipe 1
   endpoint X
   exit
   endpoint Y
   revert-time 100
   standby-signaling-slave
   exit
   sap 2/2/2:200 endpoint X
   spoke-sdp 4:400 endpoint Y
      precedence primary
   spoke-sdp 5:500 endpoint Y
      precedence 1
   spoke-sdp 6:600 endpoint Y
      precedence 1
```

118. Nokia further describes "Primary spoke-SDP" for which the "VLL service always uses this pseudowire and only switches to a secondary pseudowire when this primary pseudowire is down." Nokia also describes "Secondary spoke-SDP" for which the "user can configure the precedence of a secondary pseudowire to indicate the order in which a secondary pseudowire is activated.[37] Nokia also describes another example of using standby pseudowires for "VLL Resilience with Pseudowire Redundancy and Switching" implemented with Nokia Service Routers as shown below.[38]

[37] https://documentation.nokia.com/cgi-bin/dbaccessfilename.cgi/3HE18387AAACTQZZA01_V1_7450%20ESS%207750%20SR%207950%20XRS%20and%20VSR%20Layer%202%20Services%20and%20EVPN%20Guide%2022.7.R1.pdf (Nokia Layer 2 Services and EVPN Guide, p.101) (last visited November 20, 2024).

[38] https://documentation.nokia.com/cgi-bin/dbaccessfilename.cgi/3HE18387AAACTQZZA01_V1_7450%20ESS%207750%20SR%207950%20XRS%20and%20VSR%20Layer%202%20Services%20and%20EVPN%20Guide%2022.7.R1.pdf (Nokia Layer 2 Services and EVPN Guide, p.59) (last visited November 20, 2024).

Figure 12: VLL resilience with pseudowire redundancy and switching

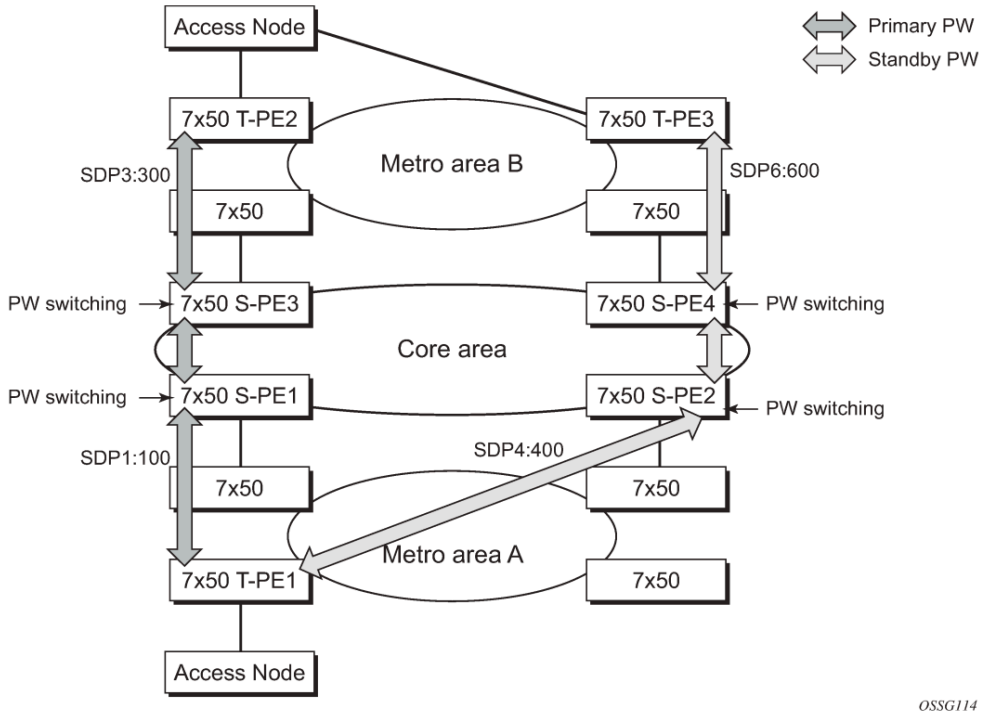

119. Nokia also states that the configuration data includes domain type information such as a "Global-id," which is a "4-byte identifier that uniquely identifies an operator or the local network" to which the pseudowire is connected to.[39]

120. On information and belief, the Accused Nokia Router Instrumentalities meet all the requirements of limitation 7B1-2 of claim 7. Limitation 7B1-2 requires that "the domain type indicates whether a plurality of node devices comprising the standby pseudowire are coupled to a single carrier network or multiple carrier networks." For example, Nokia describes that in typical service provider deployments, Multi-Segment Pseudowires can be implemented within the same

[39] https://documentation.nokia.com/cgi-bin/dbaccessfilename.cgi/3HE18387AAACTQZZA01_V1_7450%20ESS%207750%20SR%207950%20XRS%20and%20VSR%20Layer%202%20Services%20and%20EVPN%20Guide%2022.7.R1.pdf (Nokia Layer 2 Services and EVPN Guide, p.67) (last visited November 20, 2024).

Autonomous System (AS), e.g., a single carrier network, or across two different Autonomous Systems, e.g., multiple carrier network.[40] To establish such Multi-Segment Pseudowires, the Accused Nokia Router Instrumentalities use the "FEC129 Attachment Individual Identifier (AII) Type 2 information model."[41] The FEC129 AII Type 2 format includes the Global ID field which is derived from the Autonomous System (AS) number.[42] The Global ID is a "4-byte identifier that uniquely identifies an operator or the local network" to which the pseudowire is connected to.[43]

121. On information and belief, the Accused Nokia Router Instrumentalities meet all the requirements of limitation 7B2 of claim 7. Limitation 7B2 requires the system to "in response to receipt of the acknowledgement data, establish the standby pseudowire between the source node device and the destination node device based on the standby mode and domain type defined by the pseudowire configuration data." For example, Nokia states that its "routers support the ability to configure multiple secondary standby pseudowire paths. For example, PE1 uses the value of the user-configurable precendence parameter associated with each spoke-SDP to select the next available pseudowire path after the failure of the current active pseudowire (whether it is the primary one or one of the secondary pseudowires)."[44] Nokia further states that "[a]t configuration

---

[40] https://documentation.nokia.com/html/0_add-h-f/93-0267-HTML/7X50_Advanced_Configuration_Guide/MS-PW_ROUTING.pdf (7750 SR Configuration Guide, p.437) (last visited November 20, 2024).
[41] https://documentation.nokia.com/html/0_add-h-f/93-0267-HTML/7X50_Advanced_Configuration_Guide/MS-PW_ROUTING.pdf (7750 SR Configuration Guide, p.438) (last visited November 20, 2024).
[42] https://documentation.nokia.com/html/0_add-h-f/93-0267-HTML/7X50_Advanced_Configuration_Guide/MS-PW_ROUTING.pdf (7750 SR Configuration Guide, p.438) (last visited November 20, 2024).
[43] https://documentation.nokia.com/cgi-bin/dbaccessfilename.cgi/3HE18387AAACTQZZA01_V1_7450%20ESS%207750%20SR%207950%20XRS%20and%20VSR%20Layer%202%20Services%20and%20EVPN%20Guide%2022.7.R1.pdf (Nokia Layer 2 Services and EVPN Guide, p.67) (last visited November 20, 2024).
[44] https://documentation.nokia.com/cgi-bin/dbaccessfilename.cgi/3HE18387AAACTQZZA01_V1_7450%20ESS%207750%20SR%207

time, the user specifies a precedence parameter for each of the pseudowires that are part of the redundancy set […] An SR-series node uses this to select which pseudowire to forward packets to in case both pseudowires show active/active for the local/remote status during transitions."[45] Therefore, on information and belief, the Accused Nokia Router Instrumentalities establish the standby pseudowire based on the standby mode and configuration data which includes the domain type and priority.

122. On information and belief, the Accused Nokia Router Instrumentalities meet all the requirements of limitation 7B3 of claim 7. Limitation 7B3 requires the system to "determine whether to initiate a preemption of network traffic on the standby pseudowire based at least in part on the priority of the standby pseudowire." For example, as detailed above for limitation 7B1-1, Nokia describes "Primary spoke-SDP" for which the "VLL service always uses this pseudowire and only switches to a secondary pseudowire when this primary pseudowire is down." Nokia also describes "Secondary spoke-SDP" for which the "user can configure the precedence of a secondary pseudowire to indicate the order in which a secondary pseudowire is activated.[46] Therefore, on information and belief, the Accused Nokia Router Instrumentalities initiate preemption of data traffic on the standby pseudowire based at least in part on the precedence specified in the configuration data.

950%20XRS%20and%20VSR%20Layer%202%20Services%20and%20EVPN%20Guide%2022.7.R1.pdf (Nokia Layer 2 Services and EVPN Guide, p.76) (last visited November 20, 2024).

[45] https://documentation.nokia.com/cgi-bin/dbaccessfilename.cgi/3HE18387AAACTQZZA01_V1_7450%20ESS%207750%20SR%207950%20XRS%20and%20VSR%20Layer%202%20Services%20and%20EVPN%20Guide%2022.7.R1.pdf (Nokia Layer 2 Services and EVPN Guide, p.98) (last visited November 20, 2024).

[46] https://documentation.nokia.com/cgi-bin/dbaccessfilename.cgi/3HE18387AAACTQZZA01_V1_7450%20ESS%207750%20SR%207950%20XRS%20and%20VSR%20Layer%202%20Services%20and%20EVPN%20Guide%2022.7.R1.pdf (Nokia Layer 2 Services and EVPN Guide, p.101) (last visited November 20, 2024).

123. Accordingly, on information and belief and based on publicly available information, the Accused Nokia Router Instrumentalities meet all the limitations of, and therefore infringe, at least claim 7 of the ’249 Patent.

124. Nokia was not licensed or otherwise authorized by K.Mizra to make, use, import, sell, or offer to sell any products and/or services covered by the ’249 Patent, and Nokia’s conduct is, in every instance, without K.Mizra’s consent.

125. Nokia undertook the infringing actions despite an objectively high likelihood that such activities infringe the ’249 Patent, which has been duly issued by the USPTO and presumed valid.

126. Nokia is and has been on notice of the infringement of the ’249 Patent at least as of March 5, 2024, when K.Mizra sent correspondence to Nokia identifying the Accused Nokia Router Instrumentalities and detailing its infringement of the ’249 Patent.

127. Since at least the date of first learning of the ’249 Patent, which is no later than the date of the Notice Letters as detailed herein, Nokia has continued its infringing activities. As such, Nokia has willfully infringed the ’249 Patent.

128. Since at least the date of first learning of the ’249 Patent, which is no later than the date of the Notice Letters as detailed herein, Nokia has also indirectly infringed and continues to indirectly infringe the ’249 Patent in violation of 35 U.S.C. § 271(b). Nokia has actively induced, for example, its customers such as network service providers to directly infringe the ’249 Patent by configuring the system of claim 7 as detailed above throughout the United States, including within this Judicial District, by, among other things, advertising and promoting the use of the Accused Nokia Network Operations Instrumentalities in various websites, including providing and disseminating product descriptions, operating manuals, technical documentation, instructional

and/or informational videos, and other instructions on how to implement the Accused Nokia Network Operations Instrumentalities. Examples of such advertising, promotion, and/or instruction include without limitation the documents cited in the paragraphs above. Nokia did so knowing and intending that its customers and end users commit these infringing acts, despite its knowledge of the ’249 Patent, thereby specifically intending for and inducing its customers to infringe the ’249 Patent through the customers’ normal and customary implementation of the Accused Nokia Network Operations Instrumentalities.

129. Since at least the date of first learning of the ’249 Patent, which is no later than the date of the Notice Letters as detailed herein, Nokia has also indirectly infringed and continues to indirectly infringe the ’249 Patent by contributory infringement in violation of 35 U.S.C. § 271(c). Nokia contributorily infringes the ’249 Patent by offering to sell, selling, or importing into the United States, components of the Accused Nokia Router Instrumentalities, which include non-standard hardware and software, knowing the same to be especially made or especially adapted for use in infringement of the ’249 Patent, and not a staple article or commodity of commerce suitable for substantial non-infringing use.

130. As a result of Nokia’s infringement of the ’249 Patent, K.Mizra has suffered and continues to suffer substantial injury and is entitled to recover all damages caused by Nokia’s infringement to the fullest extent permitted by the Patent Act, together with prejudgment interest and costs for Nokia’s wrongful conduct.

FIFTH CAUSE OF ACTION
(PATENT INFRINGEMENT UNDER 35 U.S.C. § 271 OF THE ’880 PATENT)

131. K.Mizra re-alleges and incorporates by reference all of the foregoing paragraphs.

132. On information and belief, Nokia has infringed and continues to infringe, either literally or under the doctrine of equivalents, one or more claims, including at least claim 14 of the

’880 Patent in violation of 35 U.S.C. §§ 271 et seq., directly and/or indirectly, by making, using, offering for sale, selling and/or importing the Accused Nokia Router Instrumentalities, which include but are not limited to the Nokia Service Router Operation System (SR OS), Nokia BGP VPLS Solution, and the Nokia Portfolio of physical and virtualized routers such as the 7750 SR, 7710 SR, 710 SR, 7450 ESS series, 7x50 SR/ESS, and all other substantially similar products, systems, solutions, and services

133. For example, claim 14 of the ’880 Patent recites the following:

> A system for interconnecting a Layer 2 Virtual Private Network (L2VPN) system, comprising:
>
> [14A] a connector configured to couple a plurality of sites in a Provider Backbone Bridge (PBB) network using a plurality of provider backbone trunks that includes a Provider Backbone Transport (PBT) trunk or a Provider Backbone Bridge Traffic Engineering (PBB-TE) trunk, such that the L2VPN includes the plurality of sites;
>
> [14B] a controller coupled to the connector, wherein the controller is configured to interface with a control plane that is capable of provisioning one or more Virtual Switch Instances (VSIs) associated with the plurality of sites, the control plan[e] to be external to the plurality of sites; and
>
> [14C] a first VSI configured to use a split horizon rule to control distribution of received frames, wherein the first VSI is also configured to couple the PBB network to a Multi Protocol Label Switching (MPLS) network and to use the split horizon rule to restrict the normal VSI frame forwarding/distribution of received frames such that:
>
> > [14C1] in the event a frame is received from a Service Instance over one of the plurality of provider backbone trunks, the received frame is forwarded to Pseudowires over the MPLS network and a set of customer bound interfaces;
> >
> > [14C2] in the event a frame is received from a Pseudowire over the MPLS network, the received frame is forwarded to a set of Service Instances over the plurality of provider backbone trunks and a set of customer bound interfaces; and

> [14C3] in the event a frame is received from a customer bound interface, the received frame is forwarded as defined by the normal VSI frame forwarding behavior and no forwarding restrictions are imposed on the VSI.

134. On information and belief, and based on publicly available information, the Accused Nokia Router Instrumentalities satisfy each and every limitation of at least claim 14 of the '880 Patent. For example, Nokia provides physical and virtualized Service Routers and Service Router Operating System (SR OS) deployed in ethernet and IP/MPLS (Internet Protocol / Multiprotocol Label Switching) networks for service providers, enterprise customers, and webscale networks.[47] As detailed below, Nokia's Service Routers (SR) support the PBB-VPLS model, which "combines the best of the PBB and VPLS technologies to deliver the most scalable multi-point Layer 2 VPN in the market. PBB-VPLS inherits all the benefits derived from MPLS (for example, sub-50ms FRR protection, traffic engineering, no need for MSTP in the backbone) while greatly increasing the scalability of the network by providing MAC hiding, service multiplexing and pseudowire aggregation."[48]

135. On information and belief, the Accused Nokia Router Instrumentalities meet the preamble of claim 14, which recites a system for interconnecting a Layer 2 Virtual Private Network (L2VPN) system. For example, Nokia implements "Provider Backbone Bridge (PBB)" deployments by way of an integrated PBB and VPLS (Virtual Private LAN Service) model.[49]

---

[47] https://www.nokia.com/networks/ip-networks/service-router-operating-system-nos/ (last visited November 20, 2024).
[48] https://documentation.nokia.com/html/0_add-h-f/93-0267-HTML/7X50_Advanced_Configuration_Guide/PBB-VPLS.html#1015575 (last visited November 20, 2024).
[49] https://documentation.nokia.com/cgi-bin/dbaccessfilename.cgi/3HE18387AAACTQZZA01_V1_7450%20ESS%207750%20SR%207950%20XRS%20and%20VSR%20Layer%202%20Services%20and%20EVPN%20Guide%2022

Nokia describes its "PBB-VPLS [technology as combining] the best of the PBB and VPLS technologies to deliver the most scalable multi-point layer 2 VPN on the market."[50]

136. On information and belief, the Accused Nokia Router Instrumentalities meet limitation 14A of claim 14. Limitation 14A requires "a connector configured to couple a plurality of sites in a Provider Backbone Bridge (PBB) network using a plurality of provider backbone trunks that includes a Provider Backbone Transport (PBT) trunk or a Provider Backbone Bridge Traffic Engineering (PBB-TE) trunk, such that the L2VPN includes the plurality of sites." For example, Nokia explains that a "VPLS service connects multiple customer sites together acting like a zero-hop, layer 2 switched domain."[51] An exemplary Nokia deployment illustrated below shows a plurality of sites and VPN instances in a PBB network.[52]

.7.R1.pdf (Nokia Service Router Layer 2 Services and EVPN Guide, p.305) (last visited November 20, 2024).

[50] *Id*.

[51] https://documentation.nokia.com/html/0_add-h-f/93-0076-10-01/7750_SR_OS_Services_Guide/Service-CLI-PBB.html (last visited November 20, 2024).

[52] https://documentation.nokia.com/cgi-bin/dbaccessfilename.cgi/3HE18387AAACTQZZA01_V1_7450%20ESS%207750%20SR%207950%20XRS%20and%20VSR%20Layer%202%20Services%20and%20EVPN%20Guide%2022.7.R1.pdf (Nokia Service Router Layer 2 Services and EVPN Guide, p.330) (last visited November 20, 2024).

Figure 118: Customer services transported in 1 B-VPLS (M:1 model)

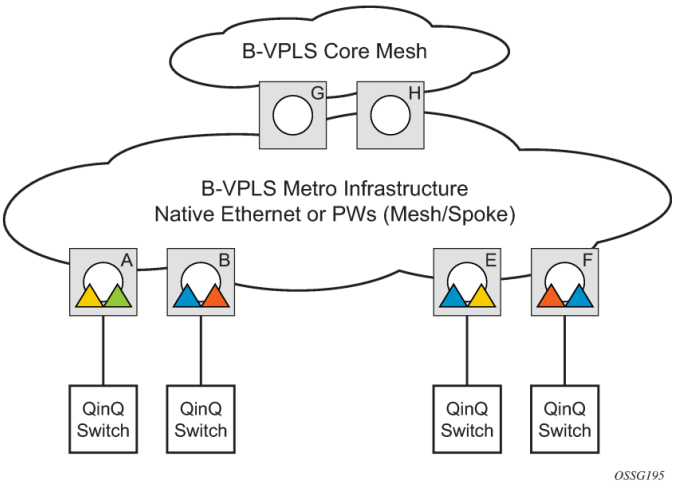

The B-VPLS infrastructure represented by the white circles is used to transport multiple customer services represented by the triangles of different colors. This service architecture minimizes the number of provisioning touches and reduces the load in the core PEs: for example, G and H use less VPLS instances and pseudowire.

In a real life deployment, different customer VPNs do not share the same community of interest – for example, VPN instances may be located on different PBB PEs. The M:1 model depicted in Figure 119: Flood containment requirement in M:1 model requires a per VPN flood containment mechanism so that VPN traffic is distributed just to the B-VPLS locations that have customer VPN sites: for example, flooded traffic originated in the blue I-VPLS should be distributed just to the PBB PEs where blue I-VPLS instances are present – PBB PE B, E and F.

137. On information and belief, the Accused Nokia Router Instrumentalities meet limitation 14B of claim 14. Limitation 14B requires "a controller coupled to the connector, wherein the controller is configured to interface with a control plane that is capable of provisioning one or more Virtual Switch Instances (VSIs) associated with the plurality of sites, the control plane to be external to the plurality of sites." For example, in the Nokia network deployment shown below, the setup consists of Provider Edge (PE) cores and Multi-Tenant Unit (MTU) nodes connected to each core, which are all implemented with Nokia Service Routers running Nokia SR OS.[53] Here,

[53] https://documentation.nokia.com/html/0_add-h-f/93-0267-HTML/7X50_Advanced_Configuration_Guide/PBB-VPLS.html (last visited November 20, 2024).

Nokia provisions six VPLS instances each associated with a different site.[54]

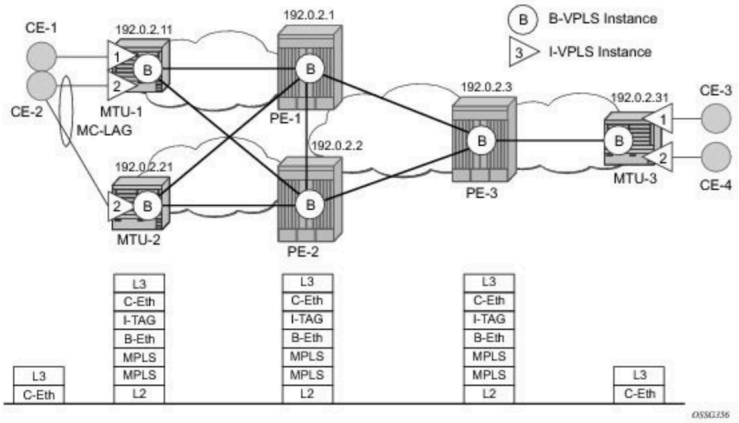

Figure 77: Network Topology

The setup consists of a three 7x50 SR/ESS (PE-1, PE-2 and PE-3) core and three MTU (Multi-Tenant Unit) nodes connected to the core. The MTU nodes can be either 7x50 or 7710 Service Routers running SR OS 7.0. A backbone VPLS instance (B-VPLS 100) will be defined in all the six nodes, whereas a few customer I-VPLS instances will be defined on the three MTU nodes. Those I-VPLS instances will be multiplexed into the common B-VPLS, using the ISID field within the I-TAG as the demultiplexer field at the egress MTU to differentiate each specific customer.

138. On information and belief, the Accused Nokia Router Instrumentalities meet all the requirements of limitation 14C of claim 7. Limitation 14C requires "a first VSI configured to use a split horizon rule to control distribution of received frames, wherein the first VSI is also configured to couple the PBB network to a Multi Protocol Label Switching (MPLS) network and to use the split horizon rule to restrict the normal VSI frame forwarding/distribution of received frames." For example, as shown below, Nokia describes the use of "split horizon groups" for B-VPLS SDPs (service distribution points for directing traffic from one Service Router to another).[55]

[54] https://documentation.nokia.com/html/0_add-h-f/93-0267-HTML/7X50_Advanced_Configuration_Guide/PBB-VPLS.html (last visited November 20, 2024).
[55] https://documentation.nokia.com/html/0_add-h-f/93-0267-HTML/7X50_Advanced_Configuration_Guide/PBB-VPLS.html (last visited November 20, 2024).

The following considerations will be taken into account when configuring the B-VPLS:

- B-VPLS SAPs:
  - → Ethernet dot1q and null encapsulations are supported
  - → Default SAP (:*) types are blocked in the CLI for the B-VPLS SAP
- B-VPLS SDPs:
  - → For MPLS, both mesh and spoke SDPs with split horizon groups are supported.
  - → Similar to regular pseudowires, the outgoing PBB frame on an SDP (for example, B-pseudowire) contains a BVID qtag only if the pseudowire type is Ethernet VLAN. If the pseudowire type is **Ethernet**, the BVID qtag is stripped before the frame goes out.
  - → BGP-AD is supported in the B-VPLS; therefore, spoke SDPs in the B-VPLS can be signaled using FEC 128 or FEC 129. In this example, BGP-AD and FEC 129 are used. A split-horizon group has been configured to emulate the behavior of mesh-SDPs in the core.
- If a local I-VPLS instance is associated with the B-VPLS, "local frames" originated/terminated on local I-VPLS(s) are PBB encapsulated/de-encapsulated using the PBB etype provisioned under the related port or SDP component.

139. As a further example, Nokia describes configuration of a B-VPLS instance for carrying PBB traffic as shown below where a Split Horizon Group is associated with a VPLS instance (service VPLS 100), which couples a PBB network and a "core" network, i.e., MPLS network.[56]

```
A:PE-1>config>service# info
----------------------------------------------
onfigure
    service
        pw-template 1 use-provisioned-sdp create
            split-horizon-group "CORE"
            exit
        exit
        vpls 100 customer 1 b-vpls create
            service-mtu 2000
            pbb
                source-bmac 00:01:01:01:01:01
            exit
            bgp-ad
                vpls-id 65000:100
                route-target export target:65000:100 import target:65000:100
                pw-template-bind 1
                no shutdown
            exit
            stp
                shutdown
            exit
            mrp
                no shutdown
            exit
            no shutdown
        exit
```

[56] https://documentation.nokia.com/html/0_add-h-f/93-0267-HTML/7X50_Advanced_Configuration_Guide/PBB-VPLS.html (last visited November 20, 2024).

140. As further shown below, Nokia also describes that upon creation of split horizon groups for a VPLS instance, normal virtual service instance frame forwarding or distribution of received frames are restricted.[57]

split-horizon-group

Syntax

[**no**] **split-horizon-group** [*group-name*] [*residential-group*]

Context

config>service>vpls

Description

This command creates a new split horizon group for the VPLS instance. Traffic arriving on a SAP or spoke SDP within this split horizon group will not be copied to other SAPs or spoke SDPs in the same split horizon group.

A split horizon group must be created before SAPs and spoke SDPs can be assigned to the group.

The split horizon group is defined within the context of a single VPLS. The same group-name can be re-used in different VPLS instances.

Up to 30 split horizon groups can be defined per VPLS instance. Half are supported in i-VPLS.

The **no** form of the command removes the group name from the configuration.

141. The Accused Nokia Router Instrumentalities meet all the requirements of limitation 14C1 of claim 14. Limitation 14C1 requires that "in the event a frame is received from a Service Instance over one of the plurality of provider backbone trunks, the received frame is forwarded to Pseudowires over the MPLS network and a set of customer bound interfaces." For example, as shown in the B-VPLS configuration below, frames received from the service instance over the PBB trunk is forwarded to the pseudowire core network, i.e., MPLS network.

[57] https://documentation.nokia.com/html/0_add-h-f/93-0076-10-01/7750_SR_OS_Services_Guide/Service-VPLS-CLI.html (last visited November 20, 2024)

```
A:PE-1>config>service# info
----------------------------------------------
onfigure
    service
        pw-template 1 use-provisioned-sdp create
            split-horizon-group "CORE"
            exit
        exit
        vpls 100 customer 1 b-vpls create
            service-mtu 2000
            pbb
                source-bmac 00:01:01:01:01:01
            exit
            bgp-ad
                vpls-id 65000:100
                route-target export target:65000:100 import target:65000:100
                pw-template-bind 1
                no shutdown
            exit
            stp
                shutdown
            exit
            mrp
                no shutdown
            exit
            no shutdown
        exit
```

142. Nokia also describes using Split Horizon Groups in various implementations including native PBB, pseudowire/MPLS, PBB E-Line services or EPS tunnels in which received frames are forwarded to customer bound interfaces.[58] Nokia further describes that "Split-horizon refers to the action taken by a router to avoid advertising a route back to the peer from which it was received."[59]

[58] https://documentation.nokia.com/cgi-bin/dbaccessfilename.cgi/3HE18387AAACTQZZA01_V1_7450%20ESS%207750%20SR%207950%20XRS%20and%20VSR%20Layer%202%20Services%20and%20EVPN%20Guide%2022.7.R1.pdf (Nokia Service Router Layer 2 Services and EVPN Guide, p.348) (last visited November 20, 2024).

[59] https://infocenter.nokia.com/public/7750SR227R1A/index.jsp?topic=%2Fcom.nokia.Unicast_Guide%2Fsplit-horizon-d497e9825.html (last visited November 20, 2024).

Solution description for PBB Epipe over G.8031 Ethernet tunnels

This section discusses the access multihoming solution for PBB E-Line over an infrastructure of G.8031 Ethernet tunnels. Although a specific use case is used, the solution works the same for any other PBB infrastructure: for example, native PBB, pseudowire/MPLS, or a combination.

The PBB E-Line service and the related BVPLS infrastructure are depicted in Figure 130: Access multihoming solution for PBB Epipe.

Figure 130: Access multihoming solution for PBB Epipe

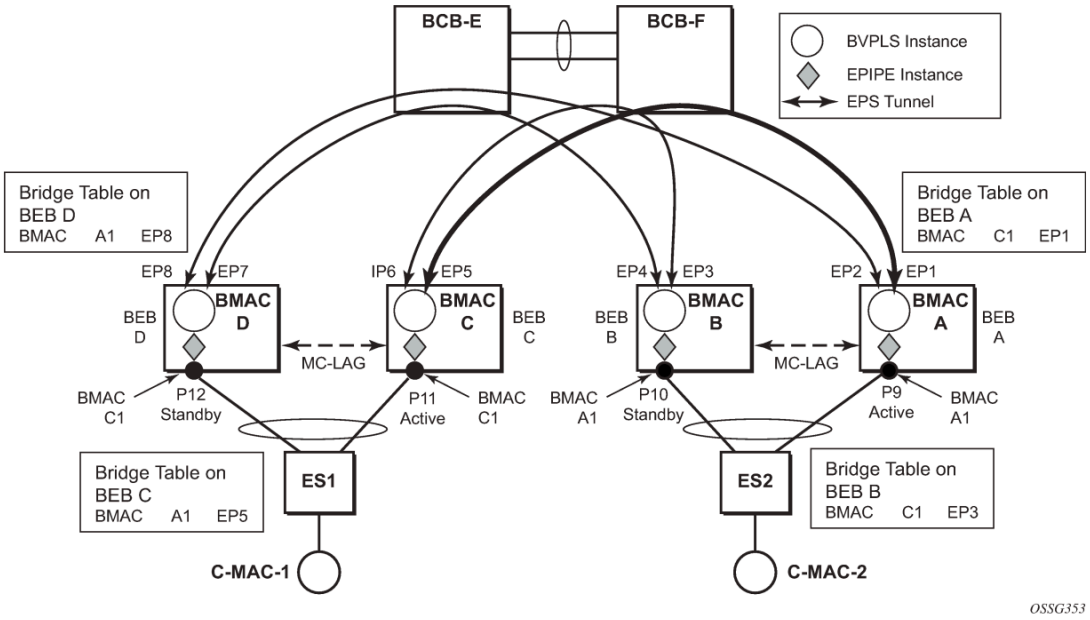

The E-Line instances are connected through the B-VPLS infrastructure. Each B-VPLS is interconnected to the BEBs in the remote pair using the G.8031, Ethernet Protection Switched (EPS) tunnels. Only the active Ethernet paths are shown in the network diagram to simplify the explanation. Split Horizon Groups may be used on EPS tunnels to avoid running MSTP/RSTP in the PBB core.

143. The Accused Nokia Router Instrumentalities meet all the requirements of limitation 14C2 of claim 14. Limitation 14C2 requires that "in the event a frame is received from a Pseudowire over the MPLS network, the received frame is forwarded to a set of Service Instances over the plurality of provider backbone trunks and a set of customer bound interfaces." For example, Nokia describes that for "VPLS instances interconnected by pseudowire mesh [,] Split

horizon groups may be used for loop avoidance between pseudowires."[60] Thus, the received frames are forwarded to a set of service instances over the backbone trunks and customer bound interfaces. Nokia further describes that "Split-horizon refers to the action taken by a router to avoid advertising a route back to the peer from which it was received."[61]

BGP VPLS

The Nokia BGP VPLS solution, compliant with RFC 4761, *Virtual Private LAN Service (VPLS) Using BGP for Auto-Discovery and Signaling*, is described in this section.

Figure 79: BGP VPLS solution

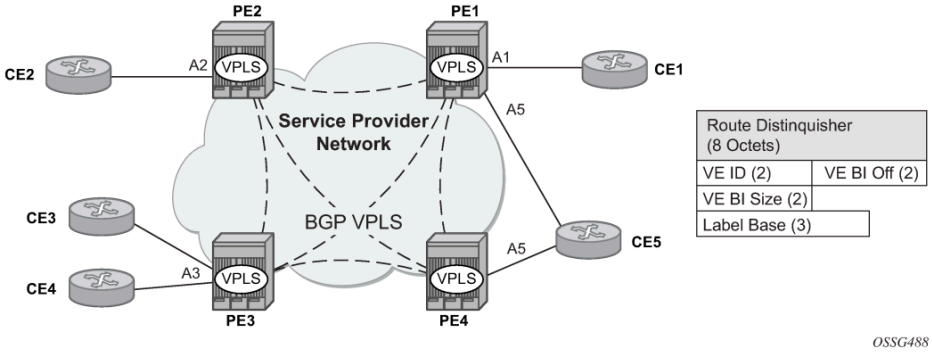

Figure 79: BGP VPLS solution shows the service representation for BGP VPLS mesh. The major BGP VPLS components and the deltas from LDP VPLS with BGP AD are as follows:

- Data plane is identical with the LDP VPLS solution; for example, VPLS instances interconnected by pseudowire mesh. Split horizon groups may be used for loop avoidance between pseudowires.

144. On information and belief, the Accused Nokia Router Instrumentalities meet all the requirements of limitation 14C3 of claim 14. Limitation 14C3 requires that "in the event a frame is received from a customer bound interface, the received frame is forwarded as defined by the normal VSI frame forwarding behavior and no forwarding restrictions are imposed on the VSI."

---

[60] https://documentation.nokia.com/cgi-bin/dbaccessfilename.cgi/3HE18387AAACTQZZA01_V1_7450%20ESS%207750%20SR%207950%20XRS%20and%20VSR%20Layer%202%20Services%20and%20EVPN%20Guide%2022.7.R1.pdf (Nokia Service Router Layer 2 Services and EVPN Guide, p.205) (last visited November 20, 2024).

[61] https://infocenter.nokia.com/public/7750SR227R1A/index.jsp?topic=%2Fcom.nokia.Unicast_Guide%2Fsplit-horizon-d497e9825.html (last visited November 20, 2024).

For example, as shown below, Nokia describes that frames received from customer bound interfaces would be forwarded without restrictions.[62]

VPLS E-Tree services overview

The VPLS E-Tree service offers a VPLS service with Root and Leaf designated access SAPs and SDP bindings, which prevent any traffic flow from leaf to leaf directly. With a VPLS E-Tree, the split horizon group capability is inherent for leaf SAPs (or SDP bindings) and extends to all the remote PEs that are part of the same VPLS E-Tree service. This feature is based on IETF Draft *draft-ietf-l2vpn-vpls-pe-etree*.

A VPLS E-Tree service may support an arbitrary number of leaf access (leaf-ac) interfaces, root access (root-ac) interfaces, and root-leaf tagged (root-leaf-tag) interfaces. Leaf-ac interfaces are supported on SAPs and SDP binds and can only communicate with root-ac interfaces (also supported on SAPs and SDP binds). Leaf-ac to leaf-ac communication is not allowed. Root-leaf-tag interfaces (supported on SAPs and SDP bindings) are tagged with root and leaf VIDs to allow remote VPLS instances to enforce the E-Tree forwarding.

Figure 89: E-Tree service shows a network with two root-ac interfaces and several leaf-ac SAPs (also could be SDPs). The figure indicates two VIDs in use to each service within the service with no restrictions on the AC interfaces. The service guarantees no leaf-ac to leaf-ac traffic.

145. Accordingly, on information and belief and based on publicly available information, the Accused Nokia Router Instrumentalities meet all the limitations of, and therefore infringe, at least claim 14 of the ’880 Patent.

146. Nokia was not licensed or otherwise authorized by K.Mizra to make, use, import, sell, or offer to sell any products and/or services covered by the ’880 Patent, and Nokia’s conduct is, in every instance, without K.Mizra’s consent.

147. Nokia undertook the infringing actions despite an objectively high likelihood that such activities infringe the ’880 Patent, which has been duly issued by the USPTO and presumed valid.

148. Nokia is and has been on notice of the infringement of the ’880 Patent at least as of March 5, 2024, when K.Mizra sent correspondence to Nokia identifying the Accused Nokia Router

[62] https://documentation.nokia.com/cgi-bin/dbaccessfilename.cgi/3HE18387AAACTQZZA01_V1_7450%20ESS%207750%20SR%207950%20XRS%20and%20VSR%20Layer%202%20Services%20and%20EVPN%20Guide%2022.7.R1.pdf (Nokia Service Router Layer 2 Services and EVPN Guide, p.241) (last visited November 20, 2024).

Instrumentalities and detailing its infringement of the ’880 Patent.

149. Since at least the date of first learning of the ’880 Patent, which is no later than the date of the Notice Letters as detailed herein, Nokia has continued its infringing activities. As such, Nokia has willfully infringed the ’880 Patent.

150. Since at least the date of first learning of the ’880 Patent, which is no later than the date of the Notice Letters as detailed herein, Nokia has also indirectly infringed and continues to indirectly infringe the ’880 Patent in violation of 35 U.S.C. § 271(b). Nokia has actively induced, for example, its customers such as network service providers to directly infringe the ’880 Patent by configuring the system of claim 14 as detailed above throughout the United States, including within this Judicial District, by, among other things, advertising and promoting the use of the Accused Nokia Network Operations Instrumentalities in various websites, including providing and disseminating product descriptions, operating manuals, technical documentation, instructional and/or informational videos, and other instructions on how to implement the Accused Nokia Network Operations Instrumentalities. Examples of such advertising, promotion, and/or instruction include without limitation the documents cited in the paragraphs above. Nokia did so knowing and intending that its customers and end users commit these infringing acts, despite its knowledge of the ’880 Patent, thereby specifically intending for and inducing its customers to infringe the ’880 Patent through the customers’ normal and customary implementation of the Accused Nokia Network Operations Instrumentalities.

151. Since at least the date of first learning of the ’880 Patent, which is no later than the date of the Notice Letters as detailed herein, Nokia has also indirectly infringed and continues to indirectly infringe the ’880 Patent by contributory infringement in violation of 35 U.S.C. § 271(c). Nokia contributorily infringes the ’880 Patent by offering to sell, selling, or importing into the

United States, components of the Accused Nokia Router Instrumentalities, which include non-standard hardware and software, knowing the same to be especially made or especially adapted for use in infringement of the '880 Patent, and not a staple article or commodity of commerce suitable for substantial non-infringing use.

152. As a result of Nokia's infringement of the '880 Patent, K.Mizra has suffered and continues to suffer substantial injury and is entitled to recover all damages caused by Nokia's infringement to the fullest extent permitted by the Patent Act, together with prejudgment interest and costs for Nokia's wrongful conduct.

COMPLIANCE WITH 35 U.S.C. § 287

153. K.Mizra has never manufactured or sold a product.

154. On information and belief, at no point in time before Nokia was put on actual notice via K.Mizra's March 2024 Notice Letters did K.Mizra have any licensee to any of the Patents-in-Suit that manufactured or sold a product that practices any of the Patents-in-Suit.

155. On information and belief, at no point in time did Global Innovation Aggregators LLC ever manufacture or sell a product, or have any licensee to any of the Patents-in-Suit that manufactured or sold a product that practices any of the Patents-in-Suit.

156. On information and belief, at no point in time did Brixham Solutions Ltd. ever manufacture or sell a product, or have any licensee to any of the Patents-in-Suit that manufactured or sold a product that practices any of the Patents-in-Suit.

157. Hammerhead Systems, Inc. ceased to do business in approximately 2009, and approximately five years before the first of the Patents-in-Suit issued from the USPTO.

PRAYER FOR RELIEF

WHEREFORE, K.Mizra respectfully requests judgment against Nokia as follows:

A. That the Court enter judgment for K.Mizra on all causes of action asserted in this Complaint;

B. That the Court enter judgment in favor of K.Mizra and against Nokia for monetary damages to compensate it for Nokia's infringement of the Patents-in-Suit pursuant to 35 U.S.C. § 284, including costs and pre and post-judgment interest as allowed by law;

C. That the Court enter judgment in favor of K.Mizra and against Nokia for accounting and/or supplemental damages for all damages occurring after any discovery cutoff and through the Court's entry of final judgment;

D. That the Court adjudge Nokia's infringement of the Patents-in-Suit to be willful dated from March 5, 2024 when Nokia was put on actual notice of infringement of the Patents-in-Suit;

E. That the Court enter judgment that this case is exceptional under 35 U.S.C. § 285 and enter an award to K.Mizra of its costs and attorneys' fees; and

F. That the Court award K.Mizra all further relief as the Court deems just and proper.

JURY DEMAND

K.Mizra requests that all claims and causes of action raised in this Complaint against Nokia be tried to a jury to the fullest extent possible.

Date: November 25, 2024

Respectfully submitted,

/s/ Claire Abernathy Henry

Claire Abernathy Henry
Texas Bar No. 24053063
Andrea Leigh Fair
Texas Bar No. 24078488
MILLER FAIR HENRY PLLC

1507 Bill Owens Parkway
Longview, TX 75604
Tel: (903) 757-6400
Fax: (903) 757-2323
claire@millerfairhenry.com
andrea@millerfairhenry.com

Cristofer I. Leffler, WA Bar No. 35020
David Schumann, CA Bar No. 223936
C. Maclain Wells, CA Bar No. 221609
(*pro hac vice* to be filed)
Cliff Win, Jr., CA Bar No. 270517
Alden K. Lee, CA Bar No. 257973
FOLIO LAW GROUP PLLC
1200 Westlake Ave. N., Ste. 809
Seattle, WA 98109
Tel: (206) 880-1802
cris.leffler@foliolaw.com
david.schumann@foliolaw.com
maclain@foliolaw.com
cliff.win@foliolaw.com
alden.lee@foliolaw.com

Joseph M. Abraham, TX Bar No. 24088879
Timothy Dewberry, TX Bar No. 24090074
FOLIO LAW GROUP PLLC
13492 Research Blvd., Suite 120, No. 177
Austin, TX 78750
Tel: (737) 234-0201
joseph.abraham@foliolaw.com
timothy.dewberry@foliolaw.com

Counsel for Plaintiff K.Mizra LLC