US 20090070923A1

(19) United States

(12) Patent Application Publication

Ruedas

(10) Pub. No.: US 2009/0070923 A1

(43) Pub. Date: Mar. 19, 2009

(54) MULTIPURPOSE URINAL ATTACHMENT

(76) Inventor: **Javier Fernando Ruedas**, Walnut, CA (US)

Correspondence Address:
Ashok Tankha
36 Greenleigh Drive
Sewell, NJ 08080

(21) Appl. No.: **12/166,324**

(22) Filed: **Jul. 2, 2008**

Related U.S. Application Data

(60) Provisional application No. 60/973,686, filed on Sep. 19, 2007.

Publication Classification

(51) **Int. Cl.**
E03D 9/02 (2006.01)

(52) **U.S. Cl.** **4/309**

(57) **ABSTRACT**

Disclosed herein is an apparatus for advertising a product or service and for sanitizing, deodorizing, and preventing splatter of fluids discharged in a urinal. The apparatus comprises a fluid permeable receptacle herein referred to as "receptacle" suspended along its longitudinal axis for absorbing discharged fluids and releasing the absorbed fluids into a drain of the urinal, an advertisement layer, and fasteners for fastening the receptacle to the urinal. The receptacle comprises particulate material embedded within compartments of the receptacle. The particulate material comprises an anti-splatter material for preventing splatter of fluids, an odor removal material for removing undesired odor from the fluids, and a sanitizing material for cleaning and disinfecting the fluids. Grommets along with the fasteners may be used for fastening the receptacle to the urinal. Advertisements may be printed on the surface of the receptacle or the advertisement layer.

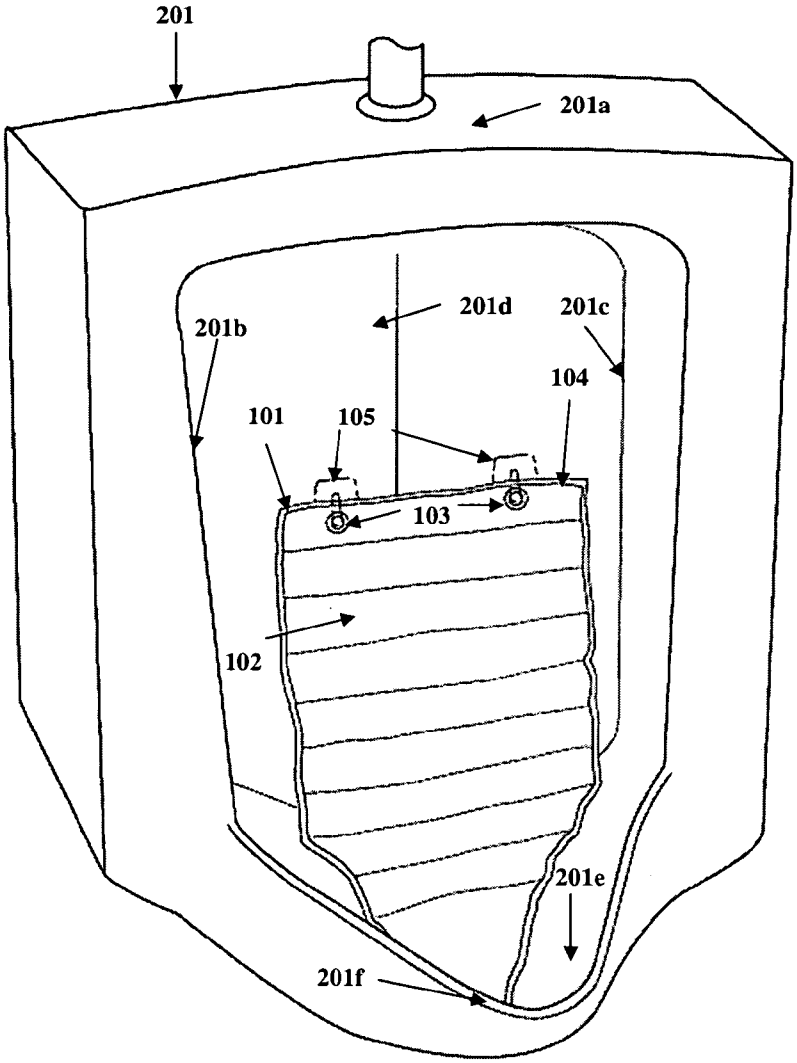

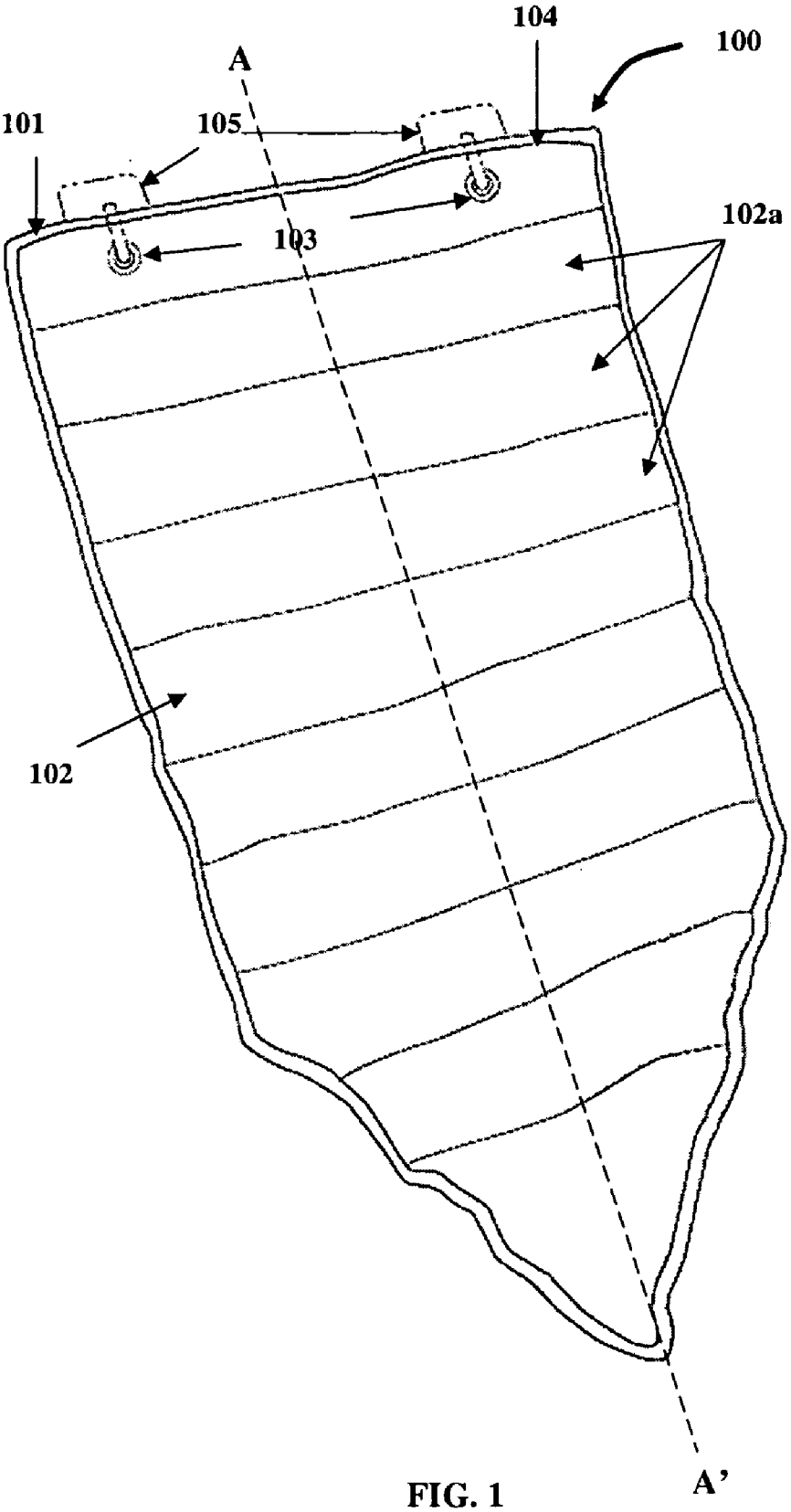

FIG. 1

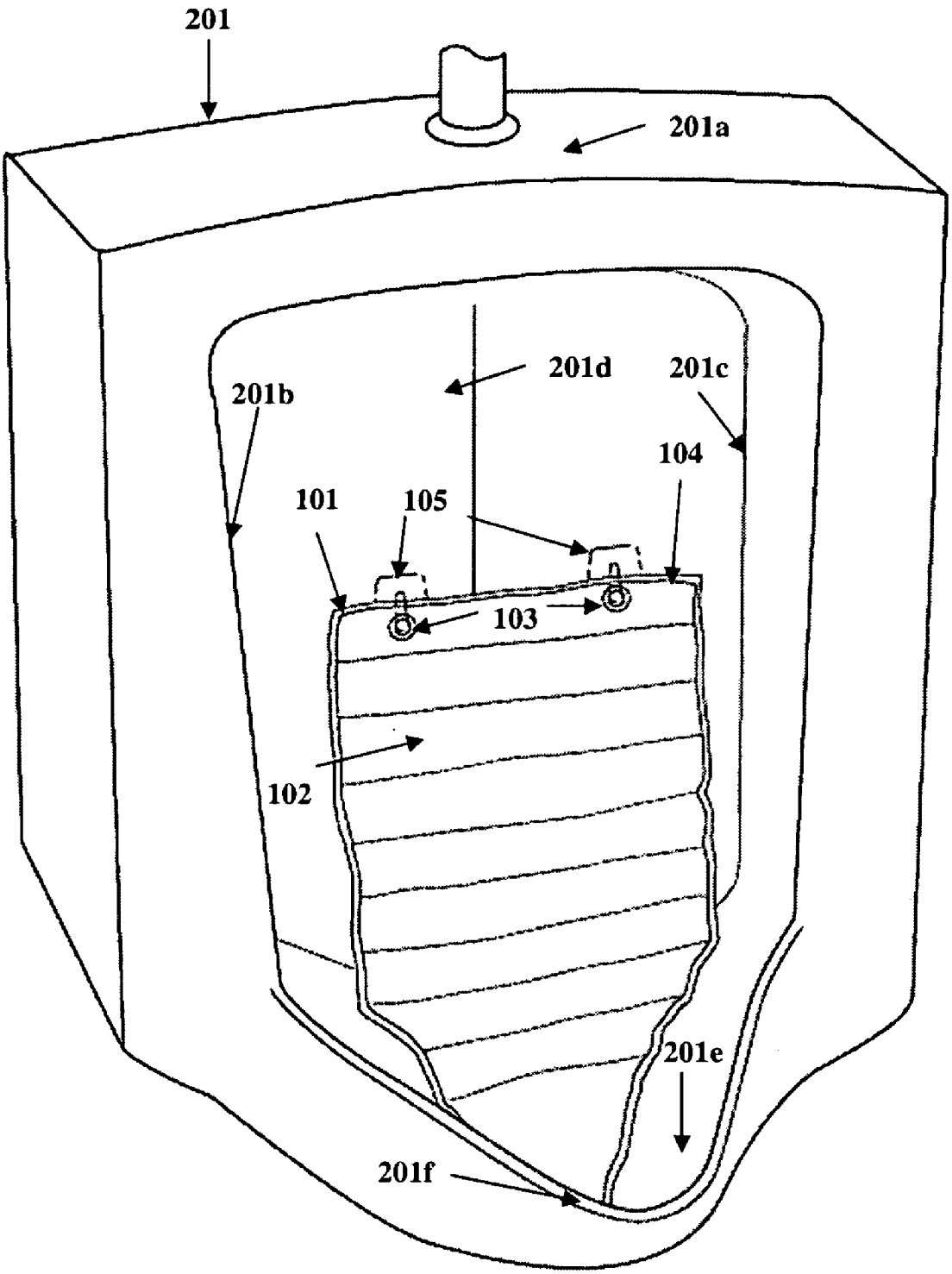

FIG. 2

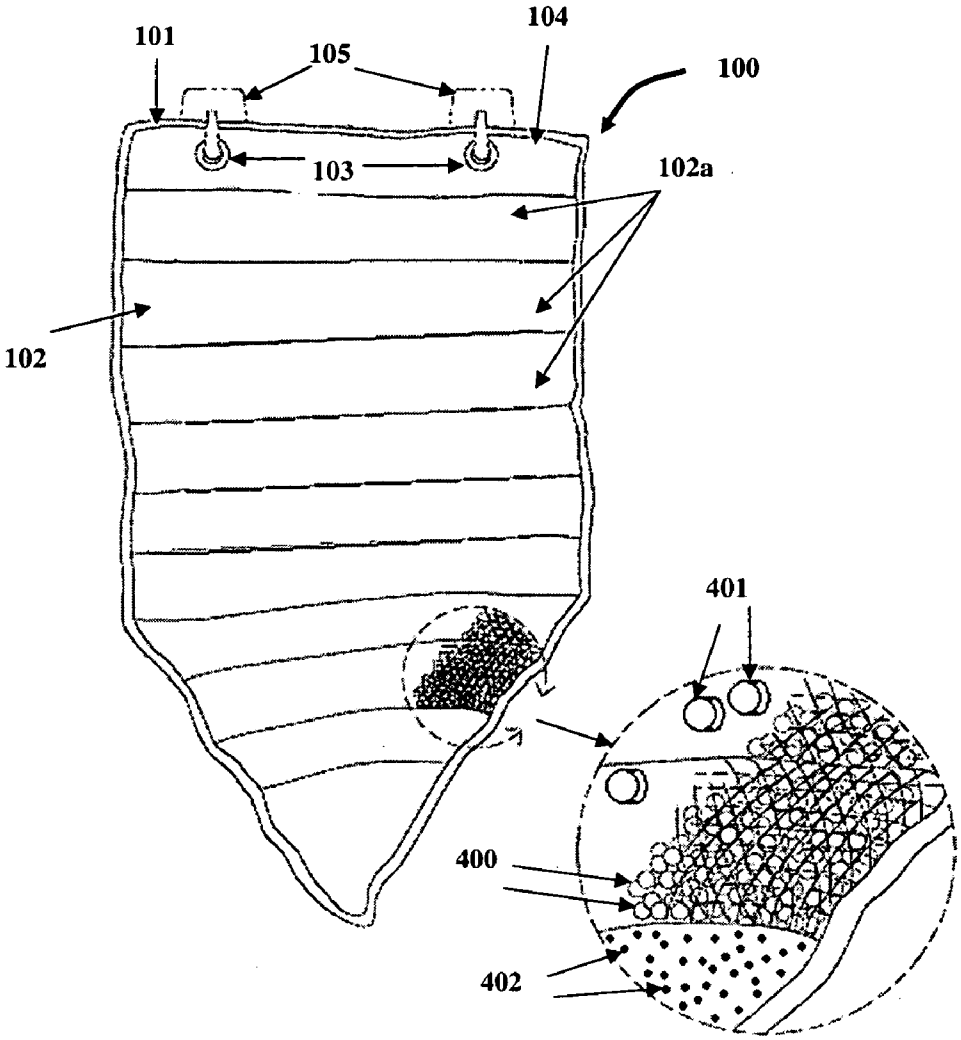

FIG. 3

FIG. 4

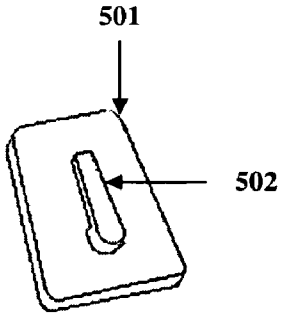

FIG. 5

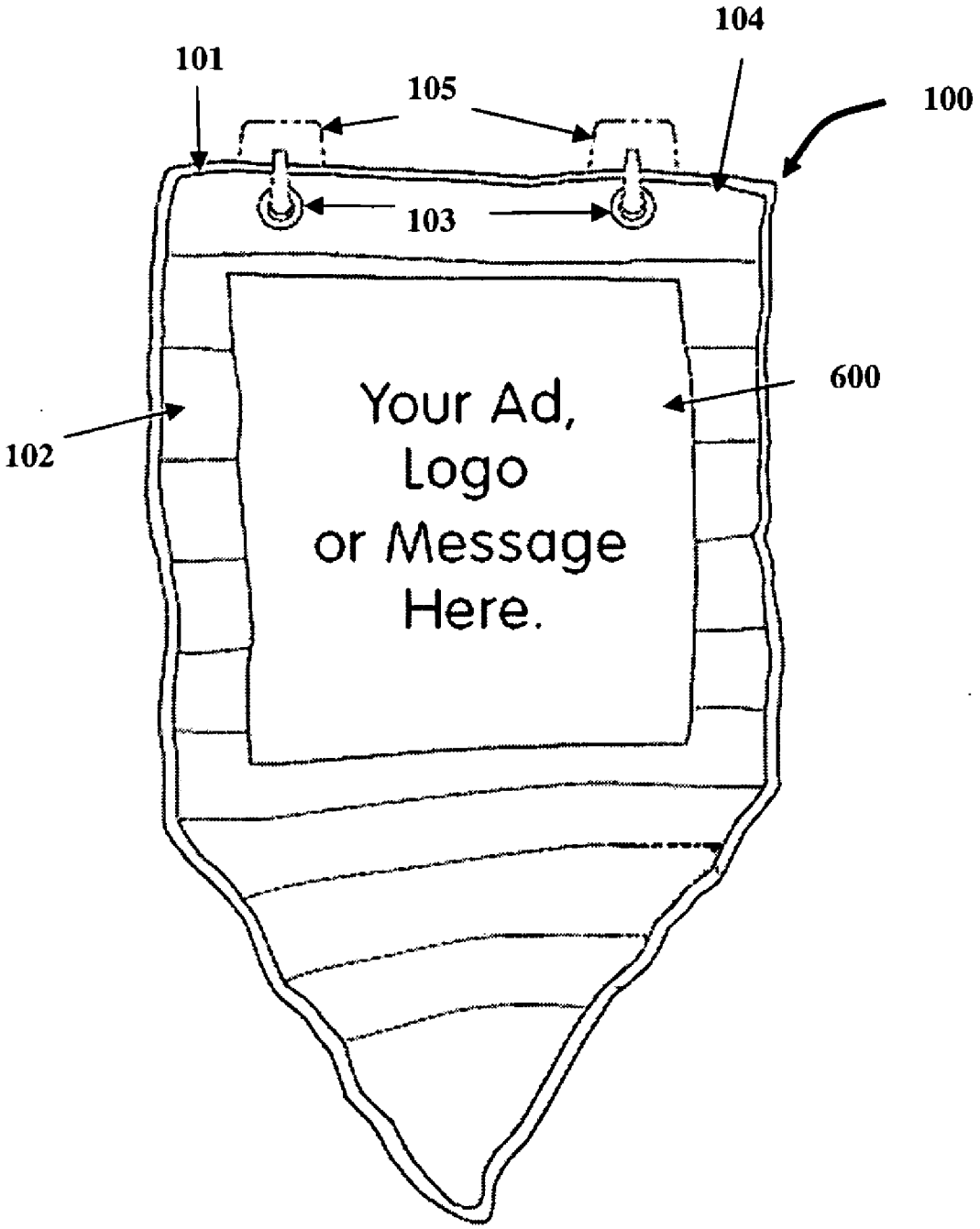

FIG. 6

MULTIPURPOSE URINAL ATTACHMENT

CROSS REFERENCE TO RELATED APPLICATIONS

[0001] This application claims the benefit of the provisional patent application 60/973,686 titled "Sanitize Advertise Deodorize, Anti-scatter Urinal design", filed on Sep. 19, 2007 in the United States Patent and Trade Mark Office.

BACKGROUND

[0002] This invention, in general, relates to a urinal attachment. More particularly, this invention relates a urinal attachment that is used for sanitizing, advertising, deodorizing, and preventing splashing of fluids discharged in a urinal.

[0003] A urinal, in general, comprises a hard, substantially vertical surface down which the urine flows to a sink or other means from where the fluids are discharged. The hard surface of the urinal results in splashing of fluids, for example, flush water, spit, urine, etc., that are discharged at a high velocity into the urinal. When fluids are discharged into the urinal at high velocity, the fluids strike the hard surface of the inner walls of the urinal and splash back outwardly from the interior vicinity of the urinal. The fluids may also splash back and deposit on the inner and outer vicinity of the urinal. A user of the urinal may be the recipient of the splashed fluids that might contain microorganisms that are unsanitary and cause infections. The splashed fluids may also lead to undesirable odor around the urinal. Drains of the urinal may get clogged with insoluble substances that may be discharged by the user, thereby restricting flow of the fluids into the drain and causing urine, etc. to accumulate in the urinal further aggravating the splash back effect.

[0004] Conventional urinal screens that typically contain a urinal block, fail to effectively prevent splashing of the fluids. These urinal screens may not effectively deodorize and sanitize the fluids. Moreover, the urinal block may be directly exposed to the flow of fluids. The fluids may dissolve the urinal block quickly due to direct contact with the fluids or the urinal block may disintegrate into chunks and flow into the drain along with the fluids.

[0005] Hence, there is a need for a urinal attachment that sanitizes, deodorizes, and prevents splashing of fluids discharged in a urinal. Furthermore, there is a need for a urinal attachment that advertises a product or service and provides advertising messages to the user.

SUMMARY OF THE INVENTION

[0006] This summary is provided to introduce a selection of concepts in a simplified form that are further described in the detailed description of the invention. This summary is not intended to identify key or essential inventive concepts of the claimed subject matter, nor is it intended for determining the scope of the claimed subject matter.

[0007] The apparatus disclosed herein addresses the above stated needs for advertising a product or service, and for sanitizing, deodorizing, and preventing splashing of fluids discharged in a urinal. The apparatus further provides advertising messages to the user. The apparatus disclosed herein comprises a fluid permeable receptacle suspended along its longitudinal axis for absorbing fluids discharged on the fluid permeable receptacle. The fluid permeable receptacle further releases the absorbed fluids into a drain of a urinal. The fluids may comprise urine, waste fluid, flush water, spit, blood, urine, etc. The fluid permeable receptacle is subdivided into multiple compartments. The compartments may be oriented in a vertical direction or a horizontal direction. The fluid permeable receptacle comprises particulate material embedded within the compartments for preventing the splatter of fluids. The particulate material comprises an anti-splatter material for preventing the splatter of the fluids, an odor removal material for removing undesired odor from the fluids, and a sanitizing material for cleaning and disinfecting the fluids. The fluid permeable receptacle may be fastened to the urinal using one or more fasteners.

[0008] The open end of the fluid permeable receptacle is sealed and comprises multiple holes with an inextensible strip, secured by multiple grommets. The inextensible strip may maintain the shape of the fluid permeable receptacle. The grommets are used for fastening the fluid permeable receptacle to the urinal using the fasteners. The fluid permeable receptacle may comprise advertisements printed on the surface of the fluid permeable receptacle. An advertisement layer may also be attached to the fluid permeable receptacle for advertising a product or service. The advertisement layer provides advertising messages to the user. The advertising messages may be educational messages, motivational messages, inspirational messages, etc. The fluid permeable receptacle covers the urinal and prevents entry of unwanted substances into the drain of the urinal. The fluid permeable receptacle prevents the splashing of the fluids that may impinge on the surface of the fluid permeable receptacle. The fluids are buffered by the particulate material present in the fluid permeable receptacle.

[0009] The apparatus disclosed herein accomplishes advertising of a product or service, sanitizing, deodorizing, and preventing splashing of discharged fluids simultaneously. Each of the components of the apparatus performs a well defined unique function, in addition to complementing and enhancing the functions of the other components. The components, in combination, perform a common function as a single apparatus. Furthermore, the apparatus enables efficient, vivid, and inexpensive advertising in a unique manner in addition to being environmentally friendly by using natural non toxic recyclable materials.

BRIEF DESCRIPTION OF THE DRAWINGS

[0010] The foregoing summary, as well as the following detailed description of the invention, is better understood when read in conjunction with the appended drawings. For the purpose of illustrating the invention, exemplary constructions of the invention are shown in the drawings. However, the invention is not limited to the specific methods and instrumentalities disclosed herein.

[0011] FIG. **1** illustrates an apparatus for advertising a product or service, and for sanitizing, deodorizing, and preventing splatter of fluids on a user from a urinal.

[0012] FIG. **2** exemplarily illustrates the apparatus positioned within a urinal.

[0013] FIG. **3** exemplarily illustrates the internal structure of the apparatus.

[0014] FIG. **4** exemplarily illustrates the particulate material contained in the apparatus.

[0015] FIG. **5** exemplarily illustrates a fastener used for fastening the apparatus to the urinal.

[0016] FIG. **6** exemplarily illustrates the apparatus with an advertisement layer.

DETAILED DESCRIPTION OF THE INVENTION

[0017] FIG. **1** illustrates an apparatus **100** for advertising a product or service, and for sanitizing, deodorizing and preventing splatter of fluids on a user from a urinal **201**. The apparatus **100** is herein referred to as a "urinal attachment". The urinal attachment **100** comprises a fluid permeable receptacle **102** herein referred to as a "receptacle" suspended along its longitudinal axis in the urinal **201**. A and A' represent the longitudinal axis of the receptacle **102**. The receptacle **102** is subdivided into multiple compartments **102***a*. The compartments **102***a* may be oriented in a vertical direction or a horizontal direction. The receptacle **102** absorbs fluids discharged on the receptacle **102** and releases the absorbed fluids into a drain (not shown) at the bottom of the urinal **201** as illustrated in FIG. **2**. The fluids may comprise urine, waste fluid, flush water, spit, blood, urine, etc. The receptacle **102** comprises particulate material embedded within the compartments **102***a*. The particulate material comprises an anti-splatter material **402**, an odor removal material **400**, and a sanitizing material **401**. The anti-splatter material **402** prevents splatter or splash back of fluids discharged onto the surface of the receptacle **102**.

[0018] The odor removal material **400** removes undesired odor from the fluids. The odor removal material **400** may be dipped in essential oils. The essential oils provide one or more of fragrance properties, deodorizing properties, disinfecting properties, and antiseptic properties to the odor removal material **400**. The odor removal material **400** may impart these properties to the fluids that may come in contact with the odor removal material **400**. The sanitizing material **401** sanitizes, disinfects, and cleans the fluids.

[0019] The urinal attachment **100** further comprises multiple fasteners **105**. The fasteners **105** secure the receptacle **102** to the urinal **201**. The fasteners **105**, for example may be, suction cups, self adhesive hooks, etc. The open end of the receptacle **102** of the urinal attachment **100** may be sealed to prevent spillage of the particulate material. The receptacle **102** may have any shape and size. The receptacle **102** is impervious to non fluid substances. The urinal attachment **100** further comprises an advertisement layer **600** attached to the receptacle **102**. The advertisement may be directly printed on the receptacle **102**. The advertisement may also be printed on an advertisement layer **600** attached to the receptacle **102** as illustrated in FIG. **6**.

[0020] The compartments **102***a* in the urinal attachment **100** may be designed to have any shape and size. The compartments **102***a* may be oriented in a predefined direction. The compartments **102***a* may be oriented in a horizontal direction as illustrated in FIG. **1**. The receptacle **102** may contain a predetermined number of compartments **102***a*.

[0021] The receptacle **102** may be made of woven fibrous material. The receptacle **102** may also be made of a non woven fibrous material. The density of the woven fibrous material and the non woven fibrous material prevents passage of non fluid substances through the receptacle **102**. The woven fibrous material may comprise, for example, plastic, silk, nylon, polyester, cotton, rayon, wool, etc. The woven fibrous material may comprise translucent or opaque materials formed of a semi-rigid or flexible material, for example polyethylene, polypropylene, poly vinyl chloride, poly ethylene terephthalate, various types of synthetic polyester meshes, etc. The receptacle **102** may be sized and adapted to conform to the dimensions of any type of urinal **201**.

[0022] The receptacle **102** may be made of one or more pieces of organza, for example, polyester, rayon, nylon, silk, cotton, wool, jute, etc. The receptacle **102** may be made of synthetic fibrous material. The synthetic fibrous material may be made of, for example, polyethylene (PE), polypropylene (PP), nylon, polytetrafluoroethylene (PTFE), polyvinyl-chloride (PVC), polyethylene-terephthalate (PET), polyester, etc. The fibers in the synthetic fibrous material may provide varying levels of penetration for the fluids.

[0023] FIG. **2** exemplarily illustrates the urinal attachment **100** positioned within a urinal **201**. The urinal attachment **100** prevents splatter of fluids outside the urinal **201** and splash back onto the user. The urinal attachment **100** comprises fasteners **105** that may be used for fastening the receptacle **102** to the urinal **201**. The urinal **201** comprises an upper section **201***a*, a first sidewall **201***b*, a second sidewall **201***c*, the back wall **201***d*, a bowl section **201***e*, and a lip portion **201***f* that are joined together to form an inner region. In general, the inner region captures discharged fluids, for example, urine, flush water, waste water, spit, etc. The lip portion **201***f* of the urinal **201** inhibits the flow of fluids or splash back of the fluids outside the bowl section **201***e* of the urinal **201**. A plumbing device (not shown) is attached to the upper section **201***a* for dispensing water into the urinal **201** to flush the urinal **201**.

[0024] The bowl section **201***e* of the urinal **201** comprises a drain apparatus (not shown). The bowl section **201***e* provides outlet for at least a portion of waste fluids discharge within the urinal **201** to a sewage plumbing device (not shown). Additionally, a flush regulator (not shown) is attached to the plumbing device to regulate the flow of flush water into the urinal **201**. The upper section **201***a*, the back wall **201***d*, the first sidewall **201***b* and second sidewall **201***c* may be adapted to direct the flow of flush water to rinse the urinal attachment **100** and the bowl section **201***e*.

[0025] The urinal attachment **100** may be attached to the back wall **201***d* of the urinal **201** to reduce consumption of water used for flushing the urinal **201**. The combination of the anti-splatter material **402**, the odor removal material **400**, and the sanitizing material **401** may substantially increase the usage life of the urinal attachment **100**. The fragrance from the odor removal material **400** may provide therapeutic properties useful in aroma therapy. The receptacle **102** may be reusable, recyclable and may comprise an aesthetically pleasing color. The receptacle **102** may be treated with a cleaning agent such as clorox, lysol, hydrogen peroxide, alcohol, and combination of bleach 1/10 and tap water 9/10, etc. The cleaning agent may reduce bacterial growth.

[0026] The receptacle **102** of the urinal attachment **100** may cover the drain of the urinal **201** to prevent entry of unwanted substances into the drain. The unwanted substances may restrict the flow of the fluids into the drain of the urinal **201**. The unwanted substances might comprise gum, tobacco, and other non fluid substances. When the discharged fluid impinges on the receptacle **102**, splashing of the fluid is prevented. The fluid is buffered by the particulate material present in the receptacle **102**.

[0027] FIG. **3** exemplarily illustrates an internal structural view of the urinal attachment **100**. The particulate material contained in the urinal attachment **100** is exemplarily illustrated in FIG. **4**. The particulate material comprises the anti-splatter material **402**, the odor removal material **400**, and the

sanitizing material **401**. The anti-splatter material **402** present in the receptacle **102** may exemplarily comprise silica, pumice, or a water soluble chemical compound, for example, sodium perborate tetra hydrate, etc. The anti-splatter material **402** absorbs at least a portion of the fluids that are discharged on the receptacle **102**, thereby reducing splashing of the discharged fluids on the user and the outer portion of the urinal **201**. The absorbed fluids may then come in contact with the odor removal material **400** and the sanitizing material **401**. The anti-splatter material **402** further suppresses noise created when the discharged fluids contact the surface of receptacle **102**, thereby providing noise attenuation around the urinal **201**.

[0028] The odor removal material **400** present in the receptacle **102** may be dipped in essential oils. The essential oils may provide one or more of fragrance properties, deodorizing properties, disinfecting properties, and antiseptic properties to the odor removal material **400**. The odor removal material **400** may disinfect, deodorize, and antisepticise the fluids that contact the odor removal material **400**. The odor removal material **400** removes undesired odor from the fluids and impart a pleasant fragrance. The odor removal material **400** may be adapted to have any shape and size. The odor removal material **400** may further reduce splatter of fluids on the user and filter the fluids from non fluid substances. The odor removal material **400** may be one or more of beads, tablets, briquettes, granules, pellets, and dispensers. The odor removal material **400** may either be soluble or insoluble in the fluids. Different receptacles may be manufactured to contain different types of odor removal materials, with each type of odor removal material **400** having a unique fragrance. The fragrance provided by the odor removal material **400** may provide benefits of aroma therapy, thereby providing a pleasant odor around the urinal **201**. The fragrance provided by the odor removal material **400** may provide a relaxed feel to the user.

[0029] The odor removal material **400** may exemplarily be aroma beads. The odor removal material **400** may comprise different types of fragrance combinations. The fragrance material may remove undesired odor from the fluids that may come in contact with the odor removal material **400**.

[0030] The sanitizing material **401** present in the receptacle **102** may comprise one or more of sanitizing beads, sanitizing urinal blocks, sanitizing tablets, sanitizing briquettes, sanitizing granules, sanitizing pellets, and sanitizing dispensers. The sanitizing material **401** present in the receptacle **102** may also comprise one of sanitizing powder, sanitizing crystals, and sanitizing enzymes. The enzymes may comprise bacterial spores, comprising sanitizing urinal blocks free from paradichlorobenzene (PARA), for example, Fragrance Master Para Free Urinal Block, manufactured by Odorite® International. The sanitizing material **401** may also be undyed. Further, the sanitizing material **401** may be non aromatic or odorless. The sanitizing material **401** present in the receptacle **102** sanitizes the fluids. The sanitizing material **401** minimizes the presence of undesirable organisms in the fluids and within the urinal **201**. The sanitizing material **401** may either be soluble or insoluble in the fluids. The sanitizing material **401** may completely deactivate the organisms present in fluids and the urinal **201**.

[0031] The sanitizing material **401** may exemplarily comprise sanitizing urinal blocks free from paradichlorobenzene, for example, Fragrance Master Para Free Urinal Block, manufactured by Odorite® International. The urinal block may be odorless and undyed. In another example, the sanitizing material **401** may comprise multiple sanitizing beads. The sanitizing beads may be made of fluid insoluble material, containing a sanitizing material.

[0032] The receptacle **102** is sealed to prevent spillage of the particulate material. A seal **104** may be applied to the open end and to each of the compartments **102***a* of the receptacle **102** by one of sewing, heat sealing, stapling, and gluing. The seal **104** may either be removable or non removable. The removable seal may comprise a zipper, a hook, and a loop fastener, etc. The removable seal may be removed to replenish the used anti-splatter material **402**, sanitizing material **401**, and the odor removal material **400**. The receptacle **102** may be sealed by sewing, heat sealing, stapling, or gluing.

[0033] In one embodiment of the urinal attachment **100** disclosed herein, the sealed end may comprise multiple holes (not shown). The sealed end of the receptacle **102** may comprise an inextensible strip **101** with multiple holes secured by multiple grommets **103**. The inextensible strip **101** maintains the structure of the receptacle **102**. The inextensible strip **101** may be, for example, plastic. The grommets **103** and the inextensible strip **101** are used for fastening the receptacle **102** to the urinal **201** using the fasteners **105**. The holes, secured by the grommets **103** present at the sealed end may be used to secure the receptacle **102** to back wall **201***d* of the urinal **201**.

[0034] FIG. **5** exemplarily illustrates a fastener used for fastening the urinal attachment **100** to the urinal **201**. The fasteners **105** secure the receptacle **102** to the back wall **201***d* of the urinal **201**.The fasteners **105** may be self adhesive hooks attached to the urinal **201**. The self adhesive hook comprises a hook **502** attached to one side of a hook plate **501** and a water resistant adhesive strip at the opposite side of the hook plate **501**. The adhesive strip may for example comprise one of Adhesive Transfer Tape made by 3M™ or adhesive water resistant strips made by Avery Dennison. The adhesive strip attaches the hook plate **501** to the urinal **201**. Suction cups may also be used for fastening the urinal attachment **100** to the urinal **201**.

[0035] FIG. **6** exemplarily illustrates the urinal attachment **100** with an advertisement layer **600**. The advertisement layer **600** provides advertising messages to the user. The advertising messages may be educational messages, motivational messages, inspirational messages, etc. The advertisement layer **600** may comprise a fibrous woven material. The fibrous material may be a water resistant material such as polyethylene (PE), polypropylene (PP), nylon, polytetrafluoroethylene (PTFE), polyvinyl-chloride (PVC), polyethylene-terephthalate (PET), polyester, etc. Advertisements may be printed on the advertisement layer **600** using a waterproof and water resistant ink. The waterproof and water resistant ink may be for example waterproof and water resistant inks manufactured by Hewlett-Packard, hp®. The printer used to print the advertisements on the advertisement layer **600** or the surface of the receptacle **102** may be, for example, a printer manufactured by Hewlett-Packard, hp®. The advertisements may comprise logos, images, promos, and other information.

[0036] In one example, the dimensions of an exemplary urinal attachment **100** may be as follows. The receptacle **102** may be 8.5 inches wide and 17.5 inches long. The advertisement layer **600** may be 8.5 inches wide and 8.5 inches long.

[0037] In one embodiment, the urinal attachment **100** is used in a water free urinal. The anti-splatter material **402** in this example may comprise sodium perborate tetra hydrate

and natural non-toxic enzymes. Sodium perborate tetra hydrate comprises disinfecting properties and antiseptic properties.

[0038] The receptacle **102** may be constructed as follows. Two pieces of sheer fabric such as organza comprising silk may be sewn around the edges to obtain a sack with an open end. The anti-splatter material **402**, the odor removal material **400** and the sanitizing material **401** may be placed inside the compartments **102***a* of the receptacle **102** either individually or as a combination. Compartments **102***a* may be formed by sewing, heat sealing, stapling, or gluing the surfaces of the two pieces of the sheer fabrics with each other. The open end may be sealed with an inextensible strip **101** in between holes present in the open end. Grommets **103** may be used to secure the holes. The receptacle **102** may be permanently sealed by heat sealing the open end. The receptacle **102** may then be secured to the back wall **201***d* of the urinal **201** using the fasteners **105**.

[0039] The foregoing examples have been provided merely for the purpose of explanation and are in no way to be construed as limiting of the present method and system disclosed herein. While the invention has been described with reference to various embodiments, it is understood that the words, which have been used herein, are words of description and illustration, rather than words of limitation. Further, although the invention has been described herein with reference to particular means, materials and embodiments, the invention is not intended to be limited to the particulars disclosed herein; rather, the invention extends to all functionally equivalent structures, methods and uses, such as are within the scope of the appended claims. Those skilled in the art, having the benefit of the teachings of this specification, may effect numerous modifications thereto and changes may be made without departing from the scope and spirit of the invention in its aspects.

I claim:

1. An apparatus for sanitizing, deodorizing, and preventing splatter of fluids discharged in a urinal on a user, comprising:

a fluid permeable receptacle suspended along its longitudinal axis in said urinal for absorbing said fluids discharged in the urinal, wherein said fluid permeable receptacle further releases said absorbed fluids into a drain of the urinal;

the fluid permeable receptacle subdivided into a plurality of compartments, wherein said compartments are oriented in one of a horizontal direction and a vertical direction with respect to said longitudinal axis of the fluid permeable receptacle;

particulate material embedded within the compartments for sanitizing, deodorizing, and preventing said splatter of the fluids discharged in the urinal; and

a plurality of fasteners for fastening the fluid permeable receptacle to the urinal;

whereby the fluid permeable receptacle sanitizes, deodorizes, and prevents the splatter of the fluids on said user.

2. The apparatus of claim **1**, wherein said particulate material comprises one or more of:

an anti-splatter material for preventing the splatter of the fluids;

an odor removal material for removing undesired odor from the fluids; and

a sanitizing material for cleaning and disinfecting the fluids.

3. The apparatus of claim **2**, wherein said anti-splatter material is one of silica, pumice and a combination thereof.

4. The apparatus of claim **2**, wherein said anti-splatter material is a water soluble chemical compound.

5. The apparatus of claim **2**, wherein said odor removal material is one or more of beads, tablets, briquettes, granules, pellets, and dispensers.

6. The apparatus of claim **2**, wherein said odor removal material is dipped in essential oils, wherein said essential oils provide one or more of fragrance properties, deodorizing properties, disinfecting properties, and antiseptic properties to the odor removal material.

7. The apparatus of claim **2**, wherein said sanitizing material is one or more of sanitizing beads, sanitizing urinal blocks, sanitizing tablets, sanitizing briquettes, sanitizing granules, sanitizing pellets, and sanitizing dispensers, sanitizing powder, sanitizing crystals, and sanitizing enzymes.

8. The apparatus of claim **2**, wherein said sanitizing material is undyed and non aromatic.

9. The apparatus of claim **2**, wherein said sanitizing material is free from paradichlorobenzene.

10. The apparatus of claim **1**, wherein said fasteners are self adhesive hooks, wherein said self adhesive hooks comprise water resistant adhesive strips.

11. The apparatus of claim **1**, wherein said fasteners are suction cups.

12. The apparatus of claim **1**, further comprising an advertisement layer attached to the fluid permeable receptacle for advertising a product or a service.

13. The apparatus of claim **1**, wherein open end of the fluid permeable receptacle is sealed, wherein said sealed end of the fluid permeable receptacle comprises an inextensible strip with a plurality of holes secured by a plurality of grommets, wherein said grommets and said inextensible strip are used for fastening the fluid permeable receptacle to the urinal using said fasteners.

14. The apparatus of claim **13**, wherein the inextensible strip maintains structure of the fluid permeable receptacle, wherein the inextensible strip is plastic.

15. The apparatus of claim **1**, wherein the fluid permeable receptacle covers said drain of the urinal to prevent entry of unwanted substances into the drain, wherein said unwanted substances restrict flow of the fluids into the drain of the urinal.

16. The apparatus of claim **1**, wherein the fluid permeable receptacle is made of one of a woven fibrous material and a non woven fibrous material, wherein density of said woven fibrous material and said non woven fibrous material prevents passage of non fluid substances through the fluid permeable receptacle.

17. An apparatus for advertising a product or service, and for sanitizing, deodorizing, and preventing splatter of fluids discharged in a urinal on a user, comprising:

a fluid permeable receptacle suspended along its longitudinal axis in said urinal for absorbing said fluids discharged in the urinal, wherein said fluid permeable receptacle releases said absorbed fluids into a drain of the urinal;

the fluid permeable receptacle subdivided into a plurality of compartments, wherein said compartments are oriented in one of a horizontal direction and a vertical direction with respect to said longitudinal axis of the fluid permeable receptacle;

particulate material embedded within the compartments for sanitizing, deodorizing, and preventing said splatter of the fluids;

an advertisement layer attached to the fluid permeable receptacle; and

a plurality of fasteners for fastening the fluid permeable receptacle to the urinal;

whereby the fluid permeable receptacle advertises said product or service, sanitizes, deodorizes, and prevents the splatter of the fluids on said user.

18. The apparatus of claim **17**, wherein said particulate material comprises one or more of:

an anti-splatter material for preventing the splatter of the fluids;

an odor removal material for removing undesired odor from the fluids; and

a sanitizing material for cleaning and disinfecting the fluids.

19. The apparatus of claim **17**, wherein said advertisement layer comprises a woven water resistant and recyclable fibrous material, wherein advertisements are printed on the advertisement layer using a waterproof and water resistant ink.

20. The apparatus of claim **19**, wherein said advertisements are directly printed on the fluid permeable receptacle using said waterproof and water resistant ink.

* * * * *