US007886958B2

(12) **United States Patent**
Smith

(10) **Patent No.: US 7,886,958 B2**
(45) **Date of Patent: Feb. 15, 2011**

(54) **CONTAINER HAVING AN AUTOMATICALLY LOCKING BOTTOM AND BLANKS FOR MAKING THE SAME**

(75) Inventor: **Kenneth Charles Smith**, Hiram, GA (US)

(73) Assignee: **Smurfit-Stone Container Enterprises, Inc.**, Chicago, IL (US)

(*) Notice: Subject to any disclaimer, the term of this patent is extended or adjusted under 35 U.S.C. 154(b) by 116 days.

(21) Appl. No.: **12/209,949**

(22) Filed: **Sep. 12, 2008**

(65) **Prior Publication Data**

US 2010/0065620 A1 Mar. 18, 2010

(51) **Int. Cl.**
B65D 5/36 (2006.01)
B65D 5/10 (2006.01)

(52) **U.S. Cl.** **229/117**; 229/109; 229/157

(58) **Field of Classification Search** 229/108.1, 229/109, 110, 117, 157
See application file for complete search history.

(56) **References Cited**

U.S. PATENT DOCUMENTS

2,348,378	A	*	5/1944	Goodyear	229/117
2,826,350	A	*	3/1958	Marx	229/110
3,501,081	A		3/1970	Paige	
3,517,875	A	*	6/1970	Wakefield	229/117
3,809,310	A	*	5/1974	VanderLugt, Jr.	229/110
4,007,869	A	*	2/1977	Stolkin et al.	229/117
4,063,679	A	*	12/1977	Henry	229/108.1
4,094,459	A		6/1978	Coons	
4,187,976	A	*	2/1980	Mather	229/117
4,218,009	A		8/1980	Don Carlos	
4,264,031	A	*	4/1981	Goebel	229/110
4,289,268	A		9/1981	Paige	
4,291,828	A		9/1981	Nigro	
4,530,460	A		7/1985	Hinton	
4,572,424	A		2/1986	Muise et al.	
4,583,678	A		4/1986	Weimer, Jr.	
4,702,408	A		10/1987	Powlenko	
5,042,714	A		8/1991	Hall	
5,066,269	A		11/1991	Center et al.	
5,522,628	A		6/1996	Fillis	
5,664,726	A		9/1997	Opper	
5,755,377	A	*	5/1998	Durand	229/110
5,927,593	A		7/1999	Berkowitz et al.	
6,109,513	A		8/2000	Dugan	
6,290,123	B1		9/2001	Pei	
6,349,876	B1		2/2002	Dowd	
6,386,437	B1		5/2002	Larson, Jr.	
6,530,516	B1		3/2003	Ritter	

(Continued)

Primary Examiner—Gary E Elkins
(74) *Attorney, Agent, or Firm*—Armstrong Teasdale LLP

(57) **ABSTRACT**

A blank of sheet material for forming a container including automatically locking bottom panels is provided. The blank includes a pair of end panels, a pair of side panels and at least one corner panel that are interconnected. The corner panel extends between an adjacent end panel and side panel. The blank includes bottom end panels extending from the end panels and bottom side panels extending from the side panels. A first coupling tab is integral with a bottom end panel, and a second coupling tab is integral with a bottom side panel. The first coupling tab attaches to a bottom side panel, and the second coupling tab attaches to a bottom end panel. The coupling tabs upwardly direct the bottom panels when the container is moved to a flat position and downwardly direct the bottom panels when the container is moved from the flat position to an erected position.

30 Claims, 7 Drawing Sheets

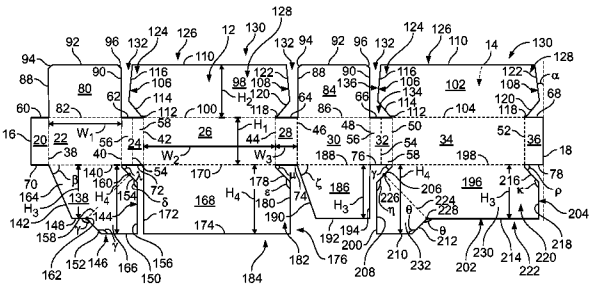

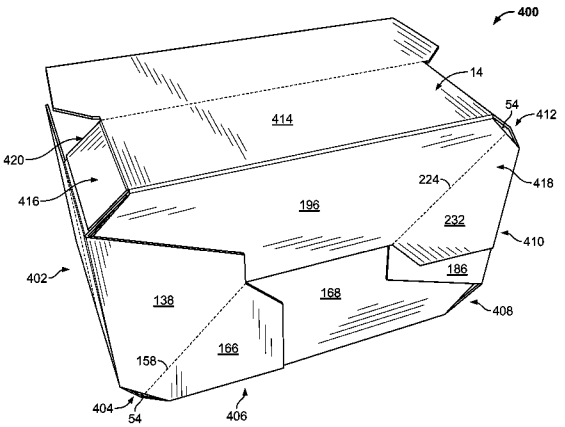

U.S. PATENT DOCUMENTS

6,557,749	B1	5/2003	Gill
6,637,645	B2	10/2003	Ferguson
6,705,515	B2	3/2004	Dowd
6,761,307	B2	7/2004	Matsuoka
6,926,192	B1	8/2005	Dowd
7,055,734	B2	6/2006	Provus et al.
7,278,565	B2	10/2007	West

* cited by examiner

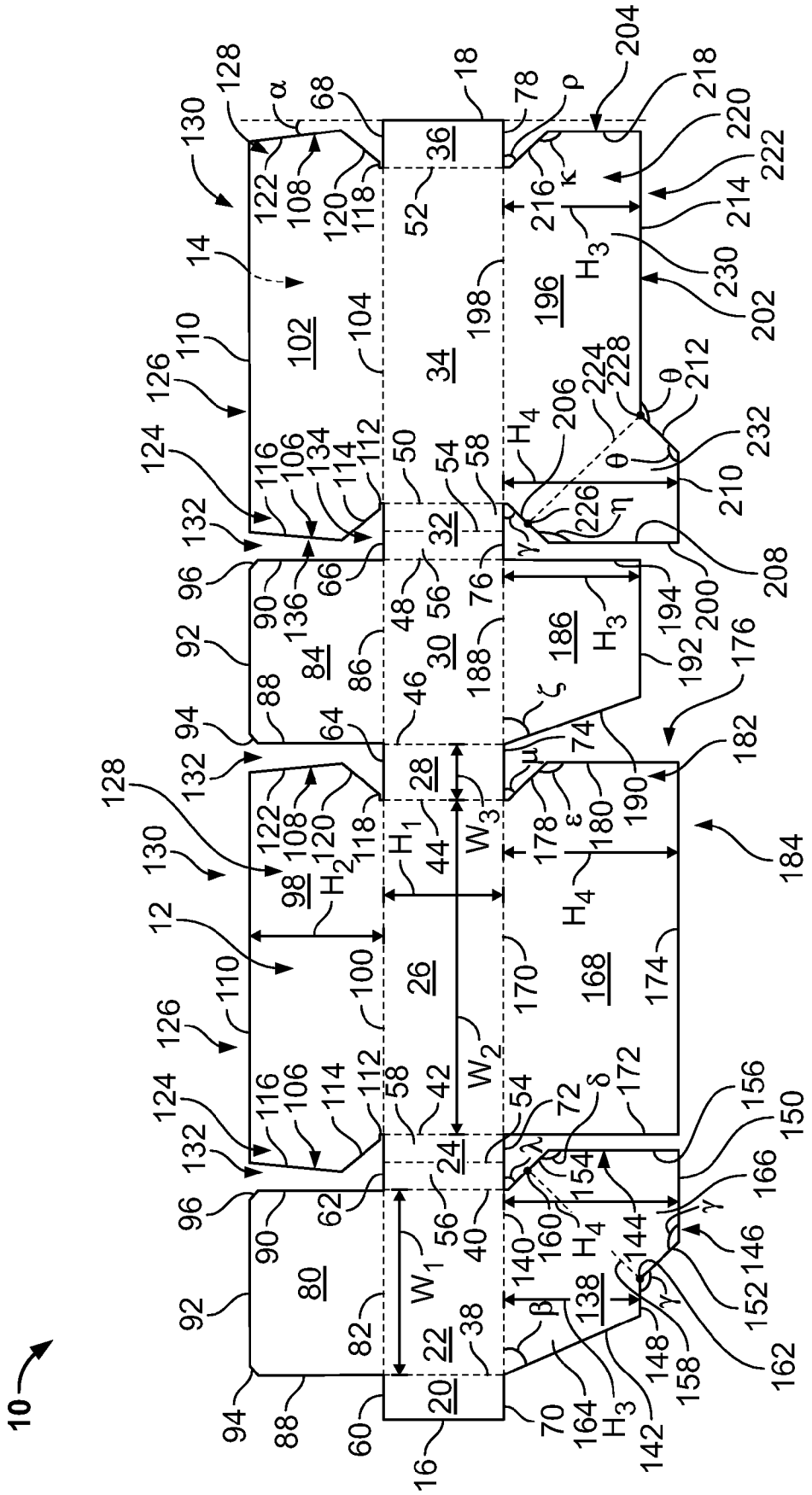

FIG. 1

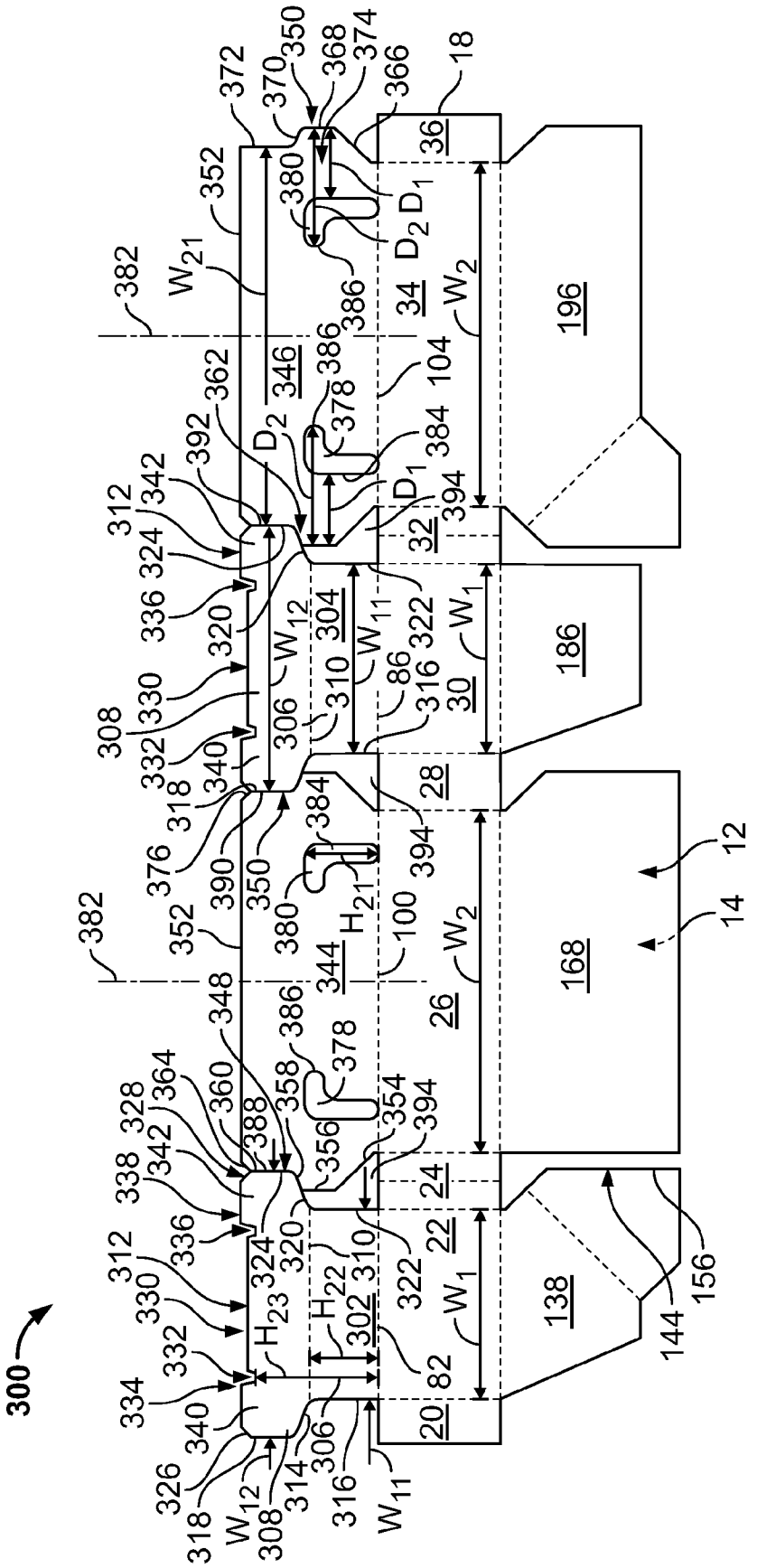
300
12
14
18
20
22
24
26
28
30
32
34
36
82
86
100
104
138
144
156
168
186
196
302
304
306
308
310
312
314
316
318
320
322
324
326
328
330
332
334
336
338
340
342
344
346
348
350
352
354
356
358
360
362
364
366
368
370
372
374
376
378
380
382
384
386
388
390
392
394
D_1
D_2
H_{21}
H_{22}
H_{23}
W_1
W_2
W_{11}
W_{12}
W_{21}

FIG. 2

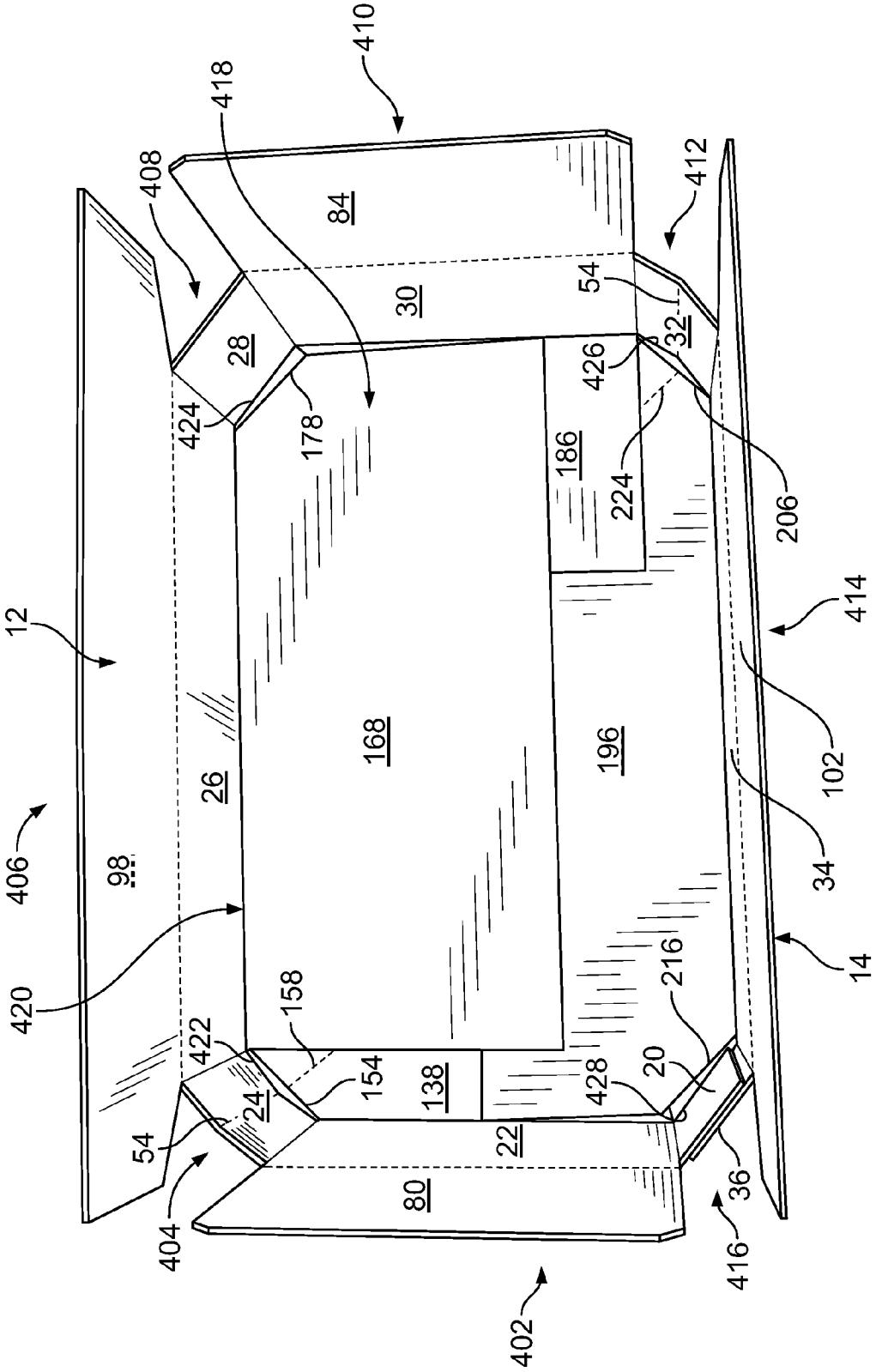
400
410
418
408
84
412
30
54
28
32
426
424
178
186
224
206
12
414
168
196
102
26
406
98
34
420
14
216
158
422
20
154
138
428
24
54
22
36
80
404
416
402

FIG. 3

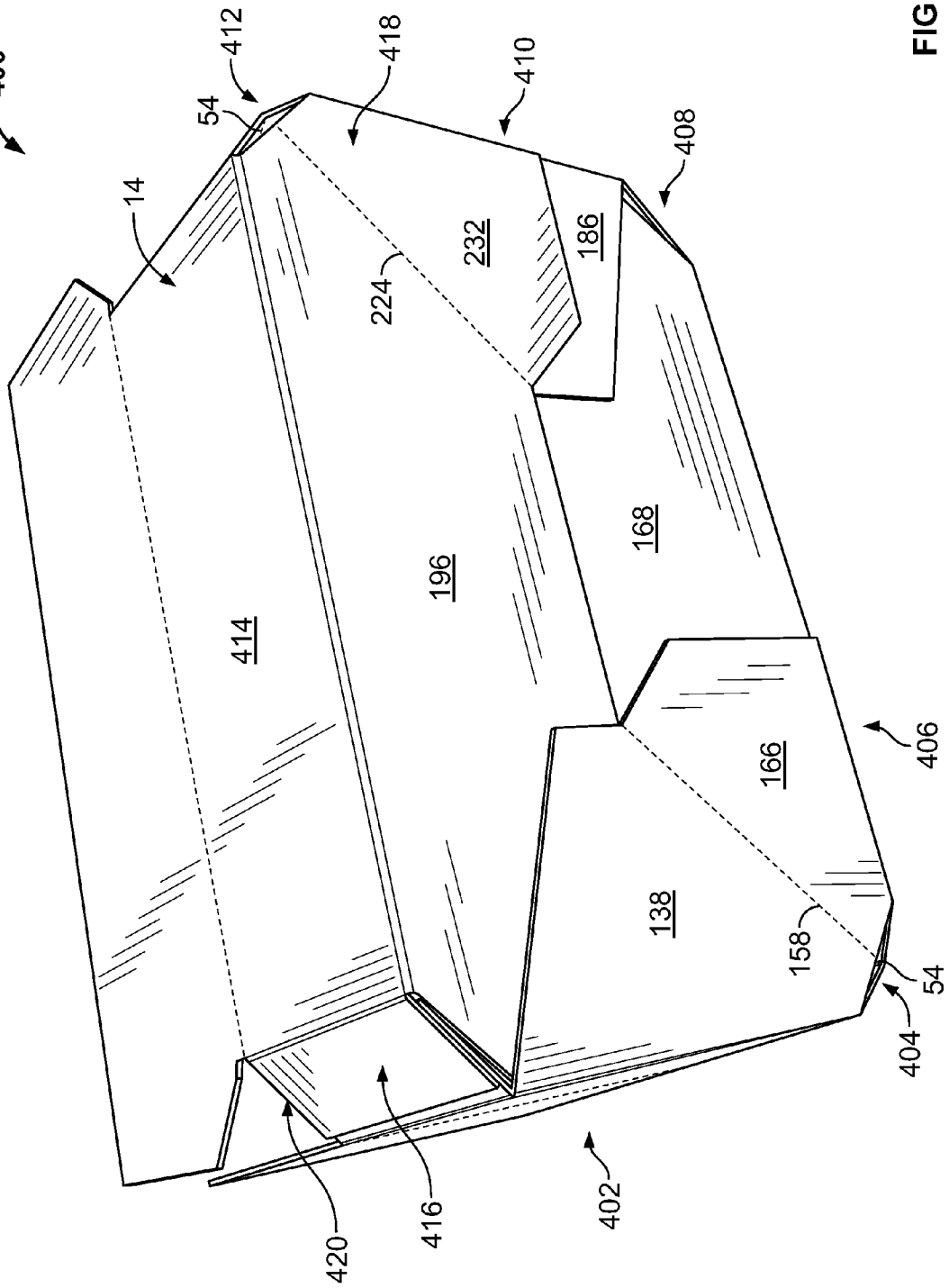
400
412
418
410
408
54
14
232
186
224
168
196
414
166
406
138
158
54
404
420
416
402

FIG. 4

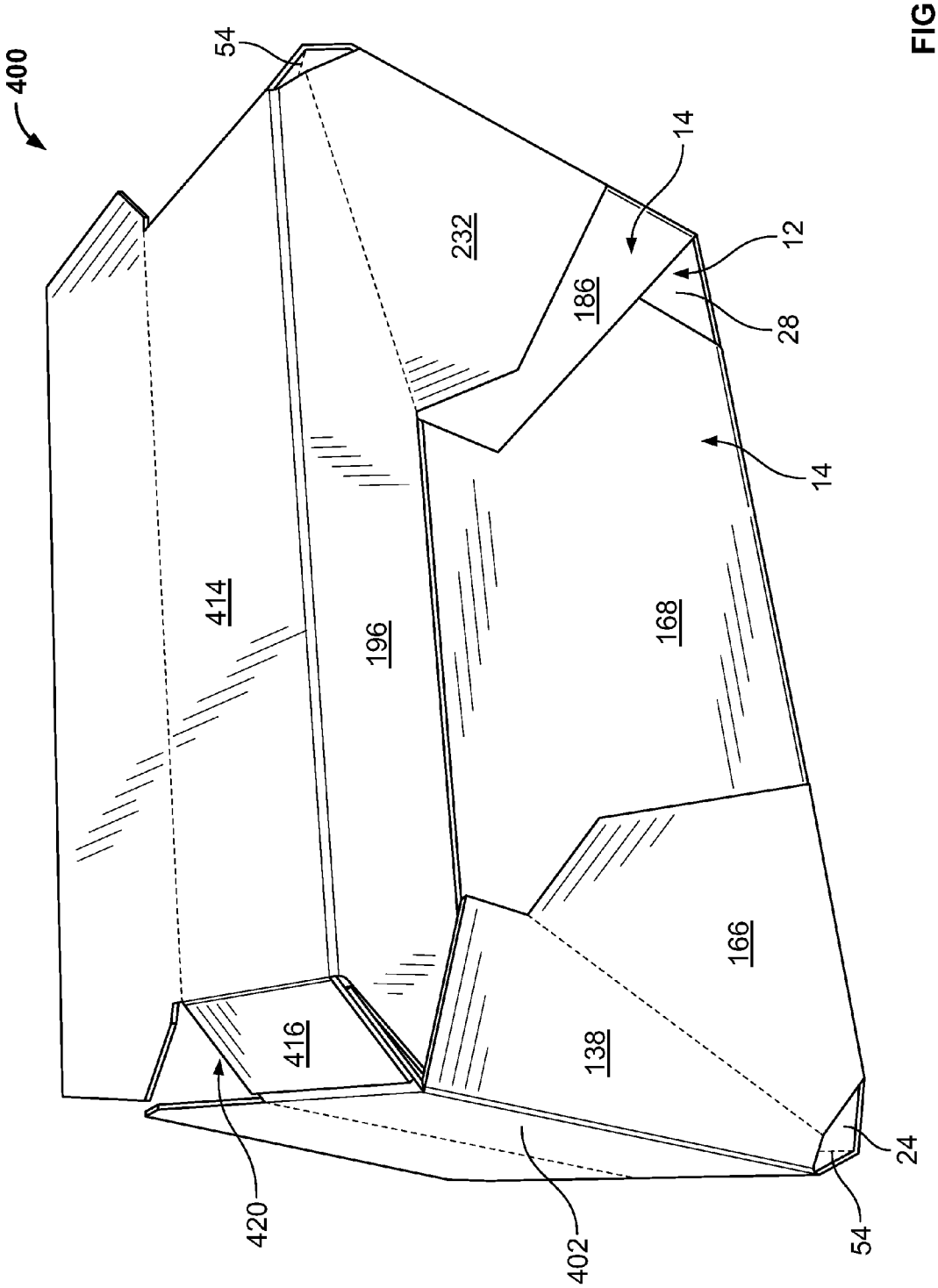

FIG. 5

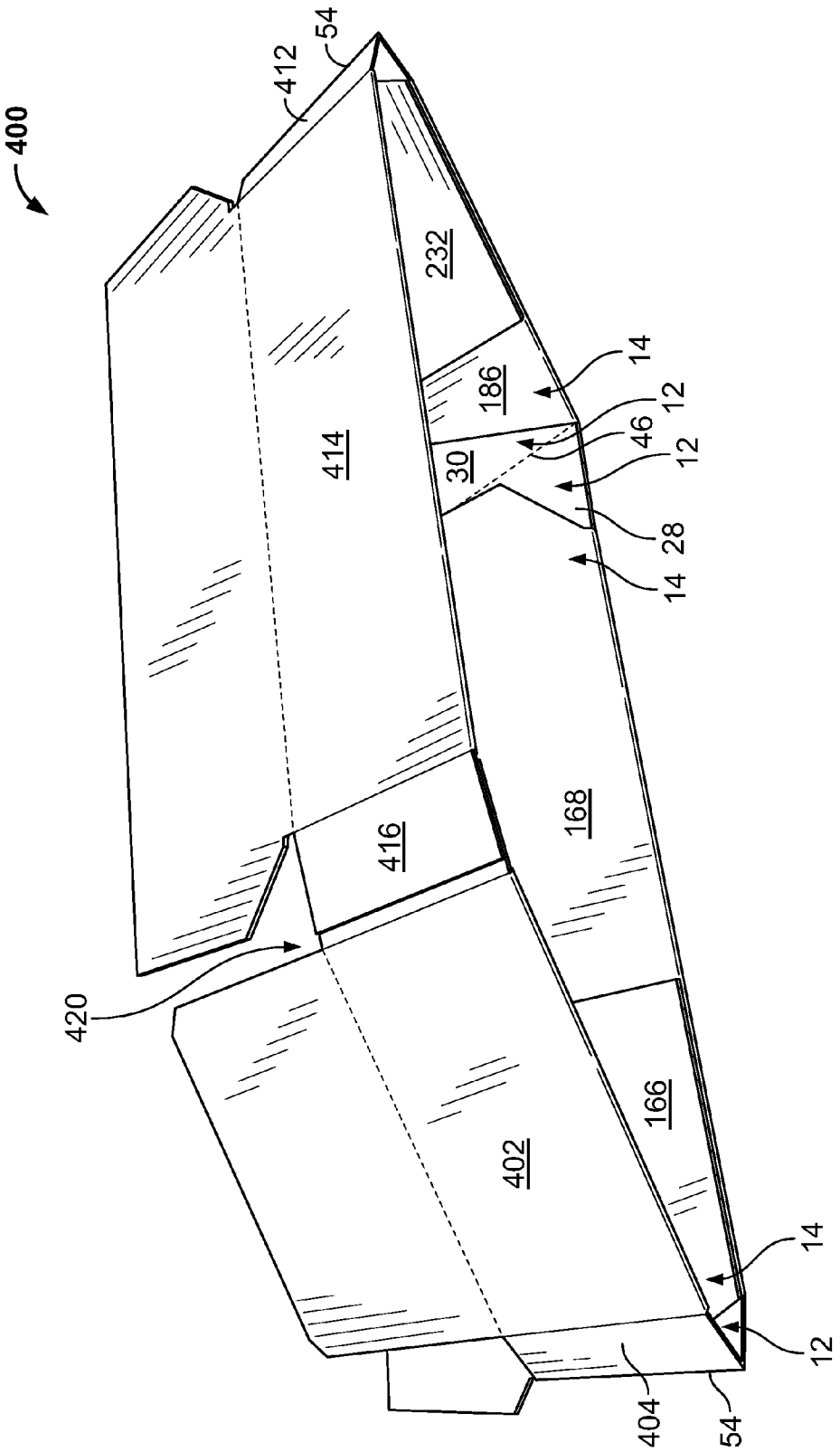
400
412
54
232
414
186
30
14
12
46
12
28
14
416
168
420
402
166
14
12
404
54

FIG. 6

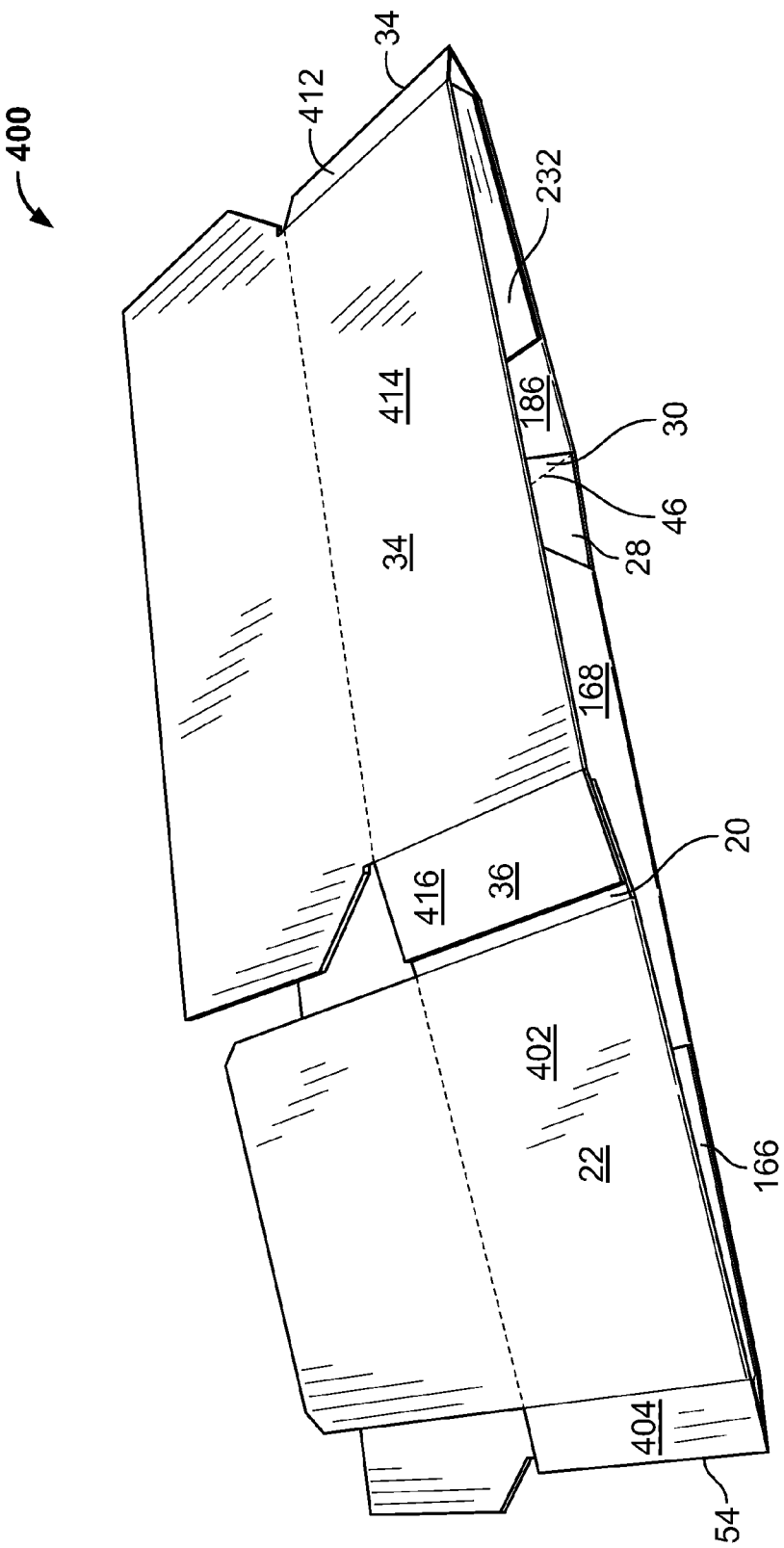

FIG. 7

CONTAINER HAVING AN AUTOMATICALLY LOCKING BOTTOM AND BLANKS FOR MAKING THE SAME

BACKGROUND OF THE INVENTION

The field of the invention relates generally to a blank and a container formed from the blank and more particularly, to a container having an automatically locking bottom wherein the container may be collapsed without breaking bonds between bottom panels and re-erected without applying additional adhesive material to the bottom panels.

Containers are frequently utilized to store and aid in transporting products. These containers can be square, hexagonal, or octagonal. The shape of the container can provide additional strength to the container. For example, octagonal-shaped containers provide greater resistance to bulge over conventional rectangular, square or even hexagonal-shaped containers. An octagonal-shaped container may also provide increased stacking strength.

In at least some known cases, an empty container can be shipped in a knocked-down flat state and opened to form an assembled container that is ready for use. Shipping and storing containers in a knocked-down flat state saves money and space, however, the size and configuration of the container can make the setup of the container difficult for an individual to complete. A container that cannot be knocked-down flat or a container that can be knocked-down flat but is difficult to erect can cause unwanted expenses and wasted time.

One known carton, as described in U.S. Pat. No. 4,007,869, includes an automatically-forming bottom. The blank used to form the carton includes four side panels and a bottom panel extending from each of the four side panels. A triangular glue flap extends from an outer edge of each of the two center bottom panels. The carton construction is an overlapped construction, and as such, a pair of opposing bottom flaps are of differing lengths such that one bottom panel of the pair overlaps the other bottom panel of the pair when the carton is erected. The bottom of the carton described in the '869 Patent is formed by folding the bottom panels over onto the side panels and reversely folding the triangular glue flaps as the bottom panels are folded over. The triangular glue flaps and the corresponding portion of the bottom panels are glued together when the blank is folded to form the carton. In a collapsed condition, the bottom panels are positioned within the side walls of the carton. From the collapsed condition, the four-sided carton is erected by applying pressure to the edges of the carton causing it to open into a rectangular shape. At the same time, due to the interconnection of the bottom panels by the triangular glue flaps of the carton, the bottom panels form a secured bottom.

Another known container, as described in U.S. Pat. No. 5,042,714, is a collapsible grocery container made of lightweight plastic or cardboard for receiving a bag of groceries. The container is a four-sided box that may be stored in an upright, folded position. The container includes two bottom wings and two bottom flaps that are folded flush against side, front, and back walls, respectively, when the container is in the folded position. A portion of each bottom flap is glued to an adjacent wing. Each bottom flap includes a notch portion along the bottom edge and also includes a slot that fits into the notch portion on the opposing bottom flap. Thus, the bottom flaps will lock into place with each other when a grocery bag is in the container.

Neither the '829 Patent nor the '714 Patent include eight side walls. One known container, as described in U.S. Pat. No. 6,386,437, includes eights side walls, however, when the

container described in the '437 Patent is collapsed, the bottom walls extend outward from bottom edges of the side walls, rather than being received within the side walls. As such, the knocked-down '437 container has a larger area as compared to containers that include bottom panels that are received within the side walls when the container is knocked down, and therefore the '437 container requires more space for storage and is more susceptible to damage. Accordingly, a need exists for an eight-sided container that may be knocked down and re-erected without additional adhesive and/or tape, wherein bottom panels of the container are received within side walls of the container when the container is knocked down flat.

BRIEF DESCRIPTION OF THE INVENTION

In one aspect, a blank of sheet material for forming a container including automatically locking bottom panels is provided. The blank includes a pair of end panels, a pair of side panels and at least one corner panel interconnected to form a pair of opposing end walls, a pair of opposing side walls and a corner wall of the container. The at least one corner panel extends between an adjacent end panel and side panel. The blank includes a plurality of bottom panels for forming a bottom wall of the container, wherein the bottom panels include a pair of bottom end panels each extending from a bottom edge of each of the pair of end panels, and a pair of bottom side panels each extending from a bottom edge of the pair of side panels. A first coupling tab is integral with one of the pair of bottom end panels, and a second coupling tab is integral with one of the pair of bottom side panels. The first coupling tab attaches to one of the pair of bottom side panels, and the second coupling tab attaches to one of the pair of bottom end panels. The coupling tabs are configured to upwardly direct the bottom panels when the container is moved from an erected position to a knocked-down flat position and downwardly direct the bottom panels when the container is moved from a knocked-down flat position to an erected position.

In another aspect, a container formed from a blank of sheet material is provided. The container has automatically locking bottom panels. The container includes a pair of end walls, a pair of side walls and at least one corner wall interconnected along a plurality of fold lines, wherein the at least one corner wall extends between an adjacent end wall and side wall, a bottom wall includes a plurality of bottom panels. The plurality of bottom panels includes a pair of bottom end panels each extending from a bottom edge of each of the pair of end walls and a pair of bottom side panels each extending from a bottom edge of the pair of side walls. A first coupling tab is integral with one of the pair of bottom end panels, and a second coupling tab is integral with one of the pair of bottom side panels. The first coupling tab attaches to one of the pair of bottom side panels, and the second coupling tab attaches to one of the pair of bottom end panels. The coupling tabs are configured to upwardly direct the bottom panels when the container is moved from an erected position to a knocked-down flat position and downwardly direct the bottom panels when the container is moved from a knocked-down flat position to an erected position.

In still another aspect, a method of forming a container from a blank of sheet material is provided. The blank includes a pair of glue flaps, a pair of end panels, a pair of side panels, and at least one corner panel connected in series along a plurality of fold lines. The method includes rotating the side panels, end panels, and the at least one corner panel about respective fold lines toward an interior surface of the blank,

coupling a first glue flap to a second glue flap to form a pair of side walls, a pair of end walls, and at least two corner walls, wherein a first corner wall includes the first and second glue flaps, rotating a first major bottom panel about a fold line toward an interior surface of a first side wall, and rotating a first minor bottom panel about a fold line toward an interior surface of a first end wall. An interior surface of the first minor bottom panel contacts an exterior surface of the first major bottom panel. The method also includes rotating a second major bottom panel about a fold line toward an interior surface of a second side wall, wherein an interior surface of the second major bottom panel contacts exterior surfaces of the first major and minor bottom panels, securing a coupling tab of the second major bottom panel to the first minor bottom panel, rotating a second minor bottom panel about a fold line toward an interior surface of a second end wall, wherein an interior surface of the second minor bottom panel contacts exterior surfaces of the major bottom panels, and securing a coupling tab of the second minor bottom panel to the first major bottom panel.

BRIEF DESCRIPTION OF THE DRAWINGS

FIG. **1** is a top plan view of a blank of sheet material for constructing a container, according to a first embodiment of the present invention.

FIG. **2** is a top plan view of a blank of sheet material for constructing a container, according to a first alternative embodiment of the present invention.

FIG. **3** is a top view of a container formed from the blank shown in FIG. **1**.

FIG. **4** is a bottom perspective view of a container formed from the blank shown in FIG. **1**.

FIG. **5** is a bottom perspective view of a partially collapsed container formed from the blank shown in FIG. **1**.

FIGS. **6** is a side perspective view of a partially collapsed container formed from the blank shown in FIG. **1**.

FIGS. **7** is a side perspective view of a collapsed container formed from the blank shown in FIG. **1**.

DETAILED DESCRIPTION OF THE INVENTION

The following detailed description illustrates the disclosure by way of example and not by way of limitation. The description clearly enables one skilled in the art to make and use the disclosure, describes several embodiments, adaptations, variations, alternatives, and use of the disclosure, including what is presently believed to be the best mode of carrying out the disclosure.

The present invention provides a stackable, collapsible container that includes bottom panels that allow the container to be collapsed and re-erected without breaking bonds between the bottom panels, and a method for constructing the container. The container is constructed from a blank of sheet material using a machine. In one embodiment, the container is fabricated from a cardboard material. The container, however, may be fabricated using any suitable material, and therefore is not limited to a specific type of material. In alternative embodiments, the container is fabricated using cardboard, plastic, fiberboard, paperboard, foamboard, corrugated paper, and/or any suitable material known to those skilled in the art and guided by the teachings herein provided.

In an example embodiment, the container includes at least one marking thereon including, without limitation, indicia that communicates the product, a manufacturer of the product and/or a seller of the product. For example, the marking may include printed text that indicates a product's name and briefly describes the product, logos and/or trademarks that indicate a manufacturer and/or seller of the product, and/or designs and/or ornamentation that attract attention. "Printing," "printed," and/or any other form of "print" as used herein may include, but is not limited to including, ink jet printing, laser printing, screen printing, giclée, pen and ink, painting, offset lithography, flexography, relief print, rotogravure, dye transfer, and/or any suitable printing technique known to those skilled in the art and guided by the teachings herein provided. In another embodiment, the container is void of markings, such as, without limitation, indicia that communicates the product, a manufacturer of the product and/or a seller of the product.

Referring now to the drawings, and more specifically to FIG. **1**, which is a top plan view of a first embodiment of a blank **10** of sheet material. A container **400** (shown in FIGS. **3-7**) is formed from blank **10**. Blank **10** has a first or interior surface **12** and an opposing second or exterior surface **14**. Further, blank **10** defines a leading edge **16** and an opposing trailing edge **18**. In one embodiment, blank **10** includes, in series from leading edge **16** to trailing edge **18**, a first glue flap **20**, a first minor side panel **22**, a first corner panel **24**, a first major side panel **26**, a second corner panel **28**, a second minor side panel **30**, a third corner panel **32**, a second major side panel **34**, and a second glue flap **36** coupled together along preformed, generally parallel, fold lines **38**, **40**, **42**, **44**, **46**, **48**, **50**, and **52**, respectively. More specifically, first glue flap **20** extends from first minor side panel **22** along fold line **38**, first corner panel **24** extends from first minor side panel **22** along fold line **40**, first major side panel **26** extends from first corner panel **24** along fold line **42**, second corner panel **28** extends from first major side panel **26** along fold line **44**, second minor side panel **30** extends from second corner panel **28** along fold line **46**, third corner panel **32** extends from second minor side panel **30** along fold line **48**, second major side panel **34** extends from third corner panel **32** along fold line **50**, and second glue flap **36** extends from second major side panel **34** along fold line **52**. Fold lines **38**, **40**, **42**, **44**, **46**, **48**, **50**, and/or **52**, as well as other fold lines and/or hinge lines described herein, may include any suitable line of weakening and/or line of separation known to those skilled in the art and guided by the teachings herein provided. Minor side panels **22** and **30** may be considered to be end panels, and major side panels **26** and **34** may be considered to be side panels.

In the exemplary embodiment, first glue flap **20**, first minor side panel **22**, first corner panel **24**, first major side panel **26**, second corner panel **28**, second minor side panel **30**, third corner panel **32**, second major side panel **34**, and second glue flap **36** have a height H_1. Minor side panels **22** and **30** have a first width W_1 and major side panels **26** and **34** have a second width W_2 that is wider than the first width W_1. Alternatively, minor side panels **22** and/or **30** and/or major side panels **26** and/or **34** are not equally dimensioned. Further, in the exemplary embodiment, corner panels **24**, **28**, and **32** and glue flaps **20** and **36** have a third width W_3 that is narrower than both the first width W_1 and the second width W_2. Alternatively, corner panels **24**, **28**, and **32** and glue flaps **20** and **36** are not equally dimensioned. In the exemplary embodiment, first corner panel **24** and third corner panel **32** each include a center fold line **54** that bisects the width of a respective corner panel **24** or **32** into a first portion **56** and a second portion **58**. Moreover, first glue flap **20**, first corner panel **24**, second corner panel **28**, third corner panel **32**, and second glue flap **36** each include a top edge **60**, **62**, **64**, **66**, and **68**, respectively, and a bottom edge **70**, **72**, **74**, **76**, and **78**, respectively.

A first minor top panel **80** extends from first minor side panel **22** along a fold line **82**, and a second minor top panel **84**

extends from second minor side panel **30** along a fold line **86**. First minor top panel **80** is substantially congruent with second minor top panel **84**. Fold lines **82** and **86** are substantially collinear with top edges **60**, **62**, **64**, **66**, and **68** and define a top edge of a respective minor side panel **22** or **30**. Each minor top panel **80** and **84** is substantially rectangular and includes a first side edge **88**, a second side edge **90**, and a free edge **92**. First side edge **88** is substantially parallel to second side edge **90**, and free edge **92** is substantially perpendicular to first and second side edges **88** and **90**. Where first side edge **88** intersects free edge **92**, an angled edge **94** is formed, and, where second side edge **90** intersects free edge **92**, an angled edge **96** is formed. Angled edges **94** and **96** facilitate assembly of a container from blank **10**. Alternatively, minor top panels **80** and/or **84** do not include angle edge **94** and/or **96**. In the exemplary embodiment, first side edge **88** of first minor top panel **80** is substantially collinear with fold line **38**, second side edge **90** of first minor top panel **80** is substantially collinear with fold line **40**, first side edge **88** of second minor top panel **84** is substantially collinear with fold line **46**, and second side edge **90** of second minor top panel **84** is substantially collinear with fold line **48**.

A first major top panel **98** extends from first major side panel **26** along a fold line **100**, and a second major top panel **102** extends from second major side panel **34** along a fold line **104**. First major top panel **98** is substantially congruent with second major top panel **102**. Fold lines **100** and **104** are substantially collinear with top edges **60**, **62**, **64**, **66**, and **68** and define a top edge of a respective major side panel **26** or **34**. Each major top panel **98** and **102** includes a first side edge **106**, a second side edge **108**, and a free edge **110**. Free edge **110** is generally perpendicular to first and second side edges **106** and **108**. First side edge **106** defines a first slot **112**, a first diverging diagonal edge **114**, and a first gradually converging edge **116**. Similarly, second side edge **108** defines a second slot **118**, a second diverging diagonal edge **120**, and a second gradually converging edge **122**. "Diverging" and "converging" are defined with respect to side edges **106** and **108** in a direction toward free edge **110**.

First diagonal edge **114** and first converging edge **116** define a first extension portion **124** extending from a first side region **126** of each major top panel **98** and **102**, and second diagonal edge **120** and second converging edge **122** define a second extension portion **128** extending from a second side region **130** of each major top panel **98** and **102**. More specifically, first extension portion **124** of first major top panel **98** extends from first side region **126** beyond fold line **42** and is adjacent to first corner panel **24** and first minor top panel **80**, second extension portion **128** of first major top panel **98** extends from second side region **130** beyond fold line **44** and is adjacent to second corner panel **28** and second minor top panel **84**, first extension panel **124** of second major top panel **102** extends from first side region **126** beyond fold line **50** and is adjacent to third corner panel **32** and second minor top panel **84**, and second extension panel **128** of second major top panel **102** extends from second side region **130** beyond fold line **52** and is adjacent to second glue panel **36** and trailing edge **18**. As such, extensions portions **124** and **128** extend above top edges **62**, **64**, **66**, and **68** of adjacent corner panels **24**, **28**, and/or **32** and/or glue panel **36**. Extension portion **124** and **128** may be considered to be corner portion extensions. Each diagonal edge **114** and **120** is configured to correspond to an angle of an adjacent corner wall **404**, **408**, **412**, or **416** (shown in FIGS. **3-7**) when container **400** is formed from blank **10**. Each slot **112** and **118** facilitate folding of major top panels **98** and **102** to close container **400** formed from blank **10**. More specifically, slots **112** and **118** enable top major panels **98** and **102** to be folded over minor top panels **80** and **84** to close container **400**.

Each minor top panel **80** and **84** is separated from an adjacent major top panel **98** and **102** by a gap **132**. Each gap **132** includes a generally triangular portion **134** and a diverging portion **136**. Further, second converging edge **122** of second major top panel **102** is oriented with respect to trailing edge **18** such that second converging edge **122** of second major top panel **102** is at an acute angle a to trailing edge **18**. Moreover, each top panel **80**, **84**, **98**, and **102** has a height H_2.

A first minor bottom panel **138** extends from first minor side panel **22** along a fold line **140**. Fold line **140** is substantially parallel to fold line **82** and defines a bottom edge of first minor side panel **22**. First minor bottom panel **138** includes a first side edge **142**, a second side edge **144**, and a free edge **146**. First side edge **142** extends from an intersection of fold lines **38** and **140** such that first side edge **142** is at an acute angle β to fold line **140**. Free edge **146** includes a first bottom edge **148** and a second bottom edge **150** that are connected by a bottom diagonal edge **152**. First and second bottom edges **148** and **150** and fold line **140** are substantially parallel, and bottom diagonal edge **152** is at an oblique angle γ to first and second bottom edges **148** and **150**. First bottom edge **148** is connected to first side edge **142**. First bottom edge **148** is spaced a height H_3 from fold line **140**, and second bottom edge **150** is spaced a height H_4 from fold line **140**, wherein height H_4 is larger than height H_3. Further, height H_3 is substantially equal to height H_2. Alternatively, height H_2 and height H_3 may be other than equal. In the exemplary embodiment, second side edge **144** includes a first portion **154** and a second portion **156**. First portion **154** extends between fold line **140** and second portion **156** and is at an oblique angle δ to second portion **156**. As such, first portion **154** is at an acute angle λ to bottom edge **72** of first corner panel **24**. Second portion **156** connects to second bottom edge **150** at a substantially right angle. Dimensions of first portion **154**, second portion **156**, and/or angle δ and/or angle λ are selected based on the configuration of a first corner wall **404** of container **400**.

Furthermore, a fold line **158** extends from a point **160** substantially bisecting first portion **154** to a point **162** at which first bottom edge **148** intersects with diagonal bottom edge **152** such that fold line **158** is substantially perpendicular to first portion **154**. Fold line **158** divides first minor bottom panel **138** into a base panel **164** and a first coupling tab **166**, wherein first coupling tab **166** extends from base panel **164** along fold line **158**. First coupling tab **166** is defined by fold line **158**, diagonal bottom edge **152**, second bottom edge **150**, second portion **156**, and a part of first portion **154**. At least a portion of first coupling tab **166** is adjacent to first corner panel **24**. At such, at least a portion of first coupling tab **166** extends beneath bottom edge **72** of first corner panel **24**. Further, base panel **164** is defined by first bottom edge **148**, first side edge **142**, fold line **140**, the other part of first portion **154**, and fold line **158**.

A first major bottom panel **168** extends from first major side panel **26** along a fold line **170**. Fold line **170** is substantially parallel to fold line **100** and defines a bottom edge of first major side panel **26**. First major bottom panel **168** includes a first side edge **172**, a free edge **174**, and a second side edge **176**. First side edge **172** extends from an intersection of fold lines **42** and **170** such that first side edge **172** is substantially collinear with fold line **42**. Free edge **174** is connected to first side edge **172** at a substantially right angle and is spaced height H_4 from fold line **170**. Second side edge **176** includes a first portion **178** and a second portion **180**.

First portion **178** extends between fold line **170** and second portion **180** and is at an oblique angle ϵ to second portion **180**. As such, first portion **178** is at an acute angle μ to bottom edge **74** of second corner panel **28**. Second portion **180** connects to free edge **174** at a substantially right angle. Dimensions of first portion **178**, second portion **180**, and/or angle ϵ and/or angle μ are selected based on the configuration of a second corner wall **408** of container **400**. Second side edge **180** defines an extension portion **182** extending from a second side region **184** of first major bottom panel **168**. Extension portion **182** of first major bottom panel **168** extends from second side region **184** beyond fold line **44** and is adjacent to second corner panel **28**. As such, extension portion **182** is beneath bottom edge **74** of second corner panel **28**.

A second minor bottom panel **186** extends from second minor side panel **30** along a fold line **188**. Fold line **188** is substantially parallel to fold line **86** and defines a bottom edge of second minor side panel **30**. Second minor bottom panel **186** includes a first side edge **190**, a free edge **192**, and a second side edge **194**. First side edge **190** extends from an intersection of fold lines **46** and **188** such that first side edge **190** is at an acute angle ζ to fold line **188**. Angle ζ is substantially equal to angle β. Alternatively, angle ζ is other than equal to angle β. In the exemplary embodiment, free edge **192** is substantially parallel to fold line **188** and is spaced height H_3 from fold line **188**. Free edge **192** is connected to first side edge **190**. Second side edge **194** is connected to free edge **192** at a substantially right angle and is substantially collinear with fold line **48**.

A second major bottom panel **196** extends from second major side panel **34** along a fold line **198**. Fold line **198** is substantially parallel to fold line **104** and defines a bottom edge of second major side panel **34**. Fold lines **140**, **170**, **188**, and **198** are substantially collinear with bottom edges **70**, **72**, **74**, **76**, and **78**. Second major bottom panel **196** includes a first side edge **200**, a free edge **202**, and a second side edge **204**. First side edge **200** includes a first portion **206** and a second portion **208**. Free edge **202** includes a first bottom edge **210**, a bottom diagonal edge **212**, and a second bottom edge **214**. Second side edge **204** includes a third portion **216** and a fourth portion **218**.

First portion **206** of first side edge **200** extends between fold line **198** and second portion **208** and is at an oblique angle η to second portion **208**. As such, first portion **206** is at an acute angle ν to bottom edge **76** of third corner panel **32**. Dimensions of first portion **206**, second portion **208**, and/or angle η and/or angle ν are selected based on the configuration of a third corner wall **412** of container **400**. First and second bottom edges **210** and **214** of free edge **202** and fold line **198** are substantially parallel, and bottom diagonal edge **212** is at an oblique angle θ to first and second bottom edges **210** and **214**. Angle θ is substantially equal to angle γ. Alternatively, angle θ is other than equal to angle γ depending on the configuration of corner walls **404**, **408**, **412**, and/or **416**. In the exemplary embodiment, first bottom edge **210** is connected to second portion **208** of first side edge **200** at a substantially right angle. First bottom edge **210** is spaced height H_4 from fold line **198**, and second bottom edge **214** is spaced height H_3 from fold line **198**.

Third portion **216** of second side edge **204** extends between fold line **198** and fourth portion **218** and is at an oblique angle κ to fourth portion **218**. As such, third portion **216** is at an acute angle ρ to bottom edge **78** of second glue flap **36**. Fourth portion **218** connects to free edge **202** at a substantially right angle. Dimensions of third portion **216**, fourth portion **218**, and/or angle κ and/or angle ρ are selected based on the configuration of a fourth corner wall **416** of container **400**. Second side edge **204** defines an extension portion **220** along a second side region **222** of second major bottom panel **196**. Extension portion **220** of second major bottom panel **196** extends from second side region **222** beyond fold line **52** and is adjacent to second glue flap **36**. As such, extension portion **220** extends beneath bottom edge **70** of second glue flap **36**.

Furthermore, a fold line **224** extends from a point **226** substantially bisecting first portion **206** of first side edge **200** to a point **228** at which second bottom edge **214** intersects with diagonal bottom edge **212** such that fold line **224** is substantially perpendicular to first portion **206**. Fold line **224** divides second major bottom panel **196** into a base panel **230** and a second coupling tab **232**, wherein second coupling tab **232** extends from base panel **230** along fold line **224**. Second coupling tab **232** is defined by fold line **224**, diagonal bottom edge **212**, first bottom edge **210**, second portion **208**, and a part of first portion **206**. At least a portion of second coupling tab **232** is adjacent to third corner panel **32**. As such, at least a portion of second coupling tab **232** extends beneath bottom edge **76** of third corner panel **32**. Further, base panel **230** is defined by second bottom edge **214**, second side edge **204**, fold line **198**, the other part of first portion **206**, and fold line **224**.

Angles δ, ϵ, η, and κ are substantially equal and angles λ, μ, ν, and ρ are substantially equal because at least first glue flap **20**, first corner panel **24**, second corner panel **28**, third corner panel **32**, and second glue flap **36** are equally dimensioned. When first glue flap **20**, first corner panel **24**, second corner panel **28**, third corner panel **32**, and/or second glue flap **36** are not equally dimensioned, angles δ, ϵ, η, and/or κ are other than equal and/or angles λ, μ, ν, and/or ρ are other than equal. Further, first coupling tab **166** is adjacent first major bottom panel **168**, extension portion **182** of first major bottom panel **168** is adjacent second minor bottom panel **186**, second coupling tab **232** is adjacent second minor bottom panel **186**, and extension portion **220** of second major bottom panel **196** is adjacent trailing edge **18**. Moreover, the portion of first coupling tab **166** that extends beneath bottom edge **72** of first corner panel **24**, extension portion **182**, the portion of the second coupling tab **232** that extends beneath bottom edge **76** of third corner panel, and extension portion **220** are considered to be corner portion extensions.

FIG. **2** is a top plan view of a blank **300** of sheet material for constructing a container according to a first alternative embodiment of the present invention. Blank **300** is essentially similar to blank **10** (shown in FIG. **1**) and, as such, similar components are labeled with similar references. More specifically, blank **300** includes an alternative embodiment the top panels.

A first minor top panel **302** extends from first minor side panel **22** along fold line **82**, and a second minor top panel **304** extends from second minor side panel **30** along fold line **86**. First minor top panel **302** is substantially congruent to second minor top panel **304**. Each minor top panel **302** and **304** includes a first portion **306** and a second portion **308** that are connected by a fold line **310**. Fold line **310** is substantially parallel to fold line **82** or **86** and facilitates closing top panels **302** and **304**, as described below. First portion **306** is substantially rectangular and extends between fold line **82** or **86** and fold line **310**. First portion **306** has a width W_{11} that is substantially equal to width W_1. Second portion **308** extends between fold line **310** and a free edge **312** of each minor top panel **302** and **304**. Second portion **308** has a width W_{12} that is wider than width W_{11} such that second portion **308** is wider than first portion **306**.

A first diagonal side edge **314** extends between a first side edge **316** of first portion **306** and a first side edge **318** of

second portion **308**. Similarly, a second diagonal side edge **320** extends between a second side edge **322** of first portion **306** and a second side edge **324** of second portion **308**. Second side edge **324** of first minor top panel second portion **308** is substantially collinear with second side edge second portion **156** of first minor bottom panel **138**. Second portion first side edge **318** connects to free edge **312** at a first angled edge **326**, and second portion second side edge **324** connects to free edge **312** at a second angled edge **328**. Alternatively, minor top panels **302** and/or **304** do not include angled edges **326** and/or **328**. In the exemplary embodiment, free edge **312** includes a recess **330** extending along the width of second portion **308**. A first notch **332** is defined at a first end **334** of recess **330**, and a second notch **336** is defined at a second end **338** of recess **330**. A first interlock tab **340** is defined between first side edge **318** and first notch **332**, and a second interlock tab **342** is defined between second side edge **324** and second notch **336**.

A first major top panel **344** extends from first major side panel **26** along fold line **100**, and a second major top panel **346** extends from second major side panel **34** along fold line **104**. First major top panel **344** is substantially congruent to second major top panel **346**. Each major top panel **344** and **346** includes a first side edge **348**, a second side edge **350**, and a free edge **352**. Free edge **352** is substantially parallel to a respective fold line **100** or **104**. First side edge **348** includes a first diagonal portion **354**, a first lateral portion **356**, a second diagonal portion **358**, and a second lateral portion **360**. First diagonal portion **354** extends from an adjacent fold line **100** or **104** toward an adjacent minor top panel **302** or **304**. First diagonal portion **354** connects to first lateral portion **356**, which is substantially perpendicular to free edge **352**. Opposing first diagonal portion **354**, first lateral portion **356** is connected to second diagonal portion **358**. Second diagonal portion **358** slopes away from an adjacent minor top panel **302** or **304** and connects to second lateral portion **360**. As such, a first projection **362** is defined by second diagonal portion **358**, first lateral portion **356**, and a portion of first diagonal portion **354**. First projections **362** extend above top edges **62** and **66** of corner panels **24** and **32**. Second lateral portion **360** is substantially perpendicular to free edge **352** and connects to free edge **352** at an angled edge **364**. Alternatively, major top panel **344** and/or **346** does not include angled edge **364**.

In the exemplary embodiment, second side edge **350** includes a first diagonal portion **366**, a first lateral portion **368**, a second diagonal portion **370**, and a second lateral portion **372**. Further, each first diagonal portion **354** and **366** is configured to correspond to an angle of an adjacent corner wall **404**, **408**, **412**, or **416** (shown in FIGS. **3-7**) when container **400** is formed from blank **300**. First diagonal portion **366** extends from an adjacent fold line **100** or **104** toward second minor top panel **304** and trailing edge **18**, respectively. First diagonal portion **366** connects to first lateral portion **368**, which is substantially perpendicular to free edge **352**. Opposing first diagonal portion **366**, first lateral portion **368** is connected to second diagonal portion **370**. Second diagonal portion **370** slopes away from second minor top panel **304** or trailing edge **18**, respectively, and connects to second lateral portion **372**. As such, a second projection **374** is defined by second diagonal portion **370**, first lateral portion **368**, and a portion of first diagonal portion **366**. Second projections **374** extend above top edges **64** and **68** of corner panel **28** and glue flap **36**, respectively. Projections **362** and **374** may be considered to be corner portion extensions. Second lateral portion **372** is substantially perpendicular to free edge **372** and connects with free edge **352** at an angled edge **376**. Alternatively, major top panel **344** and/or **346** does not include angled edge **376**. In the exemplary embodiment, a width W_{21} is measured between second lateral portions **360** and **372**. Width W_{21} is larger than width W_2.

Each major top panel **344** and **346** includes a first L-shaped slot **378** and a second L-shaped slot **380**. First and second slots **378** and **380** are adjacent to, and in contact with, a respective fold line **100** or **104**. Slots **378** and **380** are symmetrically located with respect to a centerline **382** of a respective major top panel **344** or **346**. More specifically, second slot **380** mirrors first slot **378** with respect to centerline **382**. A height H_{21} of each slot **378** and **380** is larger than a height H_{22} of first portion **306** of minor top panels **302** and **304**. Further, an outer edge **384** of each slot **378** and **380** is substantially perpendicular to an adjacent fold line **100** or **104** and is spaced a distance D_1 from an adjacent side edge first lateral portion **356** or **368**. Distance D_1 is substantially equal to height H_{22}. An inner edge **386** of each slot **378** and **380** is spaced a distance D_2 from an adjacent side edge first lateral portion **356** or **368**. Distance D_2 is substantially equal to a height H_{23} that is measured between free edge notches **332** and **336** of minor top panels **302** and **304** and a respective fold line **82** or **86**.

Each minor top panel **302** and **304** is adjacent to at least one major top panel **344** and/or **346**. More specifically, a first cut line **388** between first minor top panel **302** and first major top panel **344** defines second portion second side edge **324** of minor top panel **302**, a part of second diagonal side edge **320** of minor top panel **302**, first side edge second diagonal portion **358** of major top panel **344**, and first side edge second lateral portion **360** of major top panel **344**. A second cut line **390** between first major top panel **344** and second minor top panel **304** defines second portion first side edge **318** of minor top panel **304**, a part of first diagonal side edge **314** of minor top panel **304**, second side edge second diagonal portion **370** of major top panel **344**, and second side edge second lateral portion **372** of major top panel **344**. A third cut line **392** between second minor top panel **304** and second major top panel **346** defines second portion second side edge **324** of minor top panel **304**, a part of second diagonal side edge **320** of minor top panel **304**, first side edge second diagonal portion **358** of major top panel **346**, and first side edge second lateral portion **318** of major top panel **346**. An opening **394** is defined by the other part of minor top panel diagonal edge **314** or **320**, first portion side edge **316** or **322**, first diagonal edge **354** or **366**, and first lateral edge **356** or **368**.

FIG. **3** is a top view of a container **400** formed from blank **10**. FIG. **4** is a bottom perspective view of container **400**. FIG. **5** is a bottom perspective view of container **400** that is partially collapsed. FIG. **6** is a side perspective view of container **400** that is partially collapsed. FIG. **7** is a side perspective view of container **400** that is collapsed. Although that stages of collapsing container **400** are shown as discreet stages, it will be understood that collapse and/or erection of container **400** is a substantially continuous process.

Referring to FIGS. **1-4**, to form container **400** from blank **10** and/or **300**, side panels **22**, **26**, **30**, and **34**, corner panels **24**, **28**, and **32**, and glue flaps **20** and **36** are rotated about respective fold lines **38**, **40**, **42**, **44**, **46**, **48**, **50**, and **52** toward interior surface **12**. First glue flap **20** is secured to second glue flap **36** using adhesive, tape, bonding agent, and/or any other suitable material. As such, a bond is formed between first and second glue flaps **20** and **36**. Exterior surface **14** of first glue flap **20** is secured to interior surface **12** of second glue flap **36** such that trailing edge **18** is substantially aligned with fold line **38** and leading edge **16** is substantially aligned with fold

line **52**. Alternatively, interior surface **12** of first glue flap **20** is secured to exterior surface **14** of second glue flap **36**.

In the exemplary embodiment, first minor side panel **22** forms a first minor side wall **402**, first corner panel **24** forms a first corner wall **404**, first major side panel **26** forms a first major side wall **406**, second corner panel **28** forms a second corner wall **408**, second minor side panel **30** forms a second minor side wall **410**, third corner panel **32** forms a third corner wall **412**, second major side panel **34** forms a second major side wall **414**, and first and second glue flaps **20** and **36** form a fourth corner wall **416**. Major side walls **406** and **414** are substantially parallel, minor side walls **402** and **410** are substantially parallel, first and third corner walls **404** and **412** are substantially parallel, and second and fourth corner walls **408** and **416** are substantially parallel. Minor side walls **402** and **410** may be considered to be end walls, and major side walls **406** and **414** may be considered to be side walls.

First major bottom panel **168** is rotated about fold line **170** toward interior surface **12** to be substantially perpendicular to first major side wall **406**. Second minor bottom panel **186** is rotated about fold line **188** toward interior surface **12** to be substantially perpendicular to second minor side wall **410**. Interior surface **12** of second minor bottom panel **186** is adjacent exterior surface **14** of first major bottom panel **168**. Second major bottom panel **196** is rotated about fold line **198** toward interior surface **12** to be substantially perpendicular to second major side wall **414**. Interior surface **12** of second major bottom panel **196** is adjacent exterior surface **14** of first major bottom panel **168** and second minor bottom panel **186**. Interior surface **12** of second coupling tab **232** is secured and/or bonded to exterior surface **14** of second minor bottom panel **186** using adhesive, tape, and/or any other suitable bonding material. As such, a bond is formed between second coupling tab **232** and/or second major bottom panel **196** and second minor bottom panel **186**.

First minor bottom panel **138** is rotated about fold line **140** toward interior surface **12** to be substantially perpendicular to first minor side wall **402**. Interior surface **12** of first minor bottom panel **138** is adjacent exterior surface **14** of major bottom panels **168** and **196**. Interior surface **12** of first coupling tab **166** is secured and/or bonded to exterior surface **14** of first major bottom panel **168** using adhesive, tape, and/or any other suitable bonding material. As such, a bond is formed between first major and minor bottom panels **168** and **138**. Bottom panels **138**, **168**, **186**, and **196**, including coupling tabs **166** and **232**, form a bottom wall **418**. Bottom wall **418** and side and corner walls **402**, **404**, **406**, **408**, **410**, **412**, **414**, and **416** define a cavity **420** of container **400**. When bottom wall **418** and side and corner walls **402**, **404**, **406**, **408**, **410**, **412**, **414**, and **416** are formed without forming a top wall, container **400** is considered to be in an open configuration.

Further, when bottom wall **418** is formed, second side edge first potion **154** of first minor bottom panel **138** is adjacent a bottom edge **422** of first corner wall **404**, second side edge first portion **178** of first major bottom panel **168** is adjacent a bottom edge **424** of second corner wall **408**, first side edge first portion **206** of second major bottom panel **196** is adjacent a bottom edge **426** of third corner wall **412**, and second side edge third portion **216** of second major bottom panel **196** is adjacent a bottom edge **428** of fourth corner wall **416**.

Referring to FIG. **1**, to close container **400** formed from blank **10**, minor top panels **80** and **84** are rotated about a respective fold line **82** or **86** toward cavity **420** such that minor top panels **80** and **84** are substantially parallel to bottom wall **418**. Major top panels **98** and **102** are rotated about a respective fold line **100** or **104** toward cavity **420** such that major top panels **98** and **102** are substantially parallel to bottom wall **418**. Further, interior surface **12** of major top panels **98** and **102** are adjacent exterior surface **14** of minor top panels **80** and **84**. Top panels **80**, **84**, **98**, and **102** form the top wall. Major top panels **98** and/or **102** may be secured at least to minor top panels **80** and/or **94** using adhesive, tape, bonding material, and/or any other suitable substance and/or material.

Referring to FIG. **2**, to close container **400** formed from blank **300**, major top panels **344** and **346** are rotated about a respective fold line **100** or **104** toward cavity **420** such that major top panels **344** and **346** are substantially parallel to bottom wall **418**. Minor top panels **302** and **304** are rotated about a respective fold line **82** or **86** toward cavity **420** such that minor top panels **302** and **304** are substantially parallel to bottom wall **418**. Further, interior surface **12** of minor top panels **302** and **304** are adjacent exterior surface **14** of major top panels **344** and **346**. Top panels **302**, **304**, **344**, and **346** form the top wall. Minor top panels **302** and/or **304** may be secured to major top panels **344** and/or **346** by inserting interlock tabs **340** and **342** within an adjacent slot **378** or **380**. More specifically, first minor top panel second portion **308** may be slightly rotated about fold line **310** toward first portion **306**, and second minor top panel second portion **308** may be slightly rotated about fold line **310** toward first portion **306** to facilitate aligning interlock tabs **340** and **342** with an adjacent slot **378** or **380**. First interlock tab **340** of first minor top panel **302** is inserted into second slot **380** of second major top panel **346**, second interlock tab **342** of first minor top panel **302** is inserted into first slot **378** of first major top panel **344**, first interlock tab **340** of second minor top panel **304** is inserted into second slot **380** of first major top panel **344**, and second interlock tab **342** of second minor top panel **304** is inserted into first slot **378** of second major top panel **346**. Minor top panels **302** and/or **304** may be further secured to major top panels **344** and/or **346** using adhesive, tape, bonding material, and/or any other suitable substance and/or material.

Referring to FIGS. **1** and **5-7**, to collapse container **400**, major bottom panels **168** and **196** are pushed into cavity **420** toward interior surface **12** of side and corner walls **402**, **404**, **406**, **408**, **410**, **412**, **414**, and **416**. Coupling tabs **166** and **232** pull minor bottom panels **138** and **186** into cavity **420**. Further, coupling tabs **166** and **232** rotate about a respective fold line **158** or **224** toward exterior surface **14** of an adjacent base panel **164** or **230**. As bottom panels **138**, **168**, **186**, and **196** are rotated into cavity **420**, first minor side wall **402** is rotated about first corner panel fold line **54** toward first major side wall **406**. Similarly, second minor side wall **410** is rotated about third corner panel fold line **54** toward second major side wall **414**. As such, bottom wall **418** collapsed within cavity **420** and is received within side and corner walls **402**, **404**, **406**, **408**, **410**, **412**, **414**, and **416**. As such, coupling tabs **166** and **232** are configured to upwardly direct bottom panels **138**, **168**, **186**, and **196** into cavity **420** when container **400** is moved from the open configuration to a collapsed configuration.

When bottom panels **138**, **168**, **186**, and **196** are fully rotated into cavity **420** and received within side and corner walls **402**, **404**, **406**, **408**, **410**, **412**, **414**, and **416**, bottom panels **138**, **168**, **186**, and **196** are substantially parallel to side and corner walls **402**, **404**, **406**, **408**, **410**, **412**, **414**, and **416**. Further, interior surfaces **12** of first and second portions **56** and **58** of first and third corner panels **24** and **32** are adjacent. Interior surface **12** of first minor bottom panel base panel **164** is adjacent interior surface **12** of first minor side wall **402**, interior surface **12** of first major bottom panel **168** is adjacent interior surface **12** of first major side wall **406** and second corner wall **408**, interior surface **12** of second minor bottom panel **186** is adjacent interior surface **12** of second minor side

wall **410**, and interior surface **12** of second major bottom panel base panel **230** is adjacent interior surface **12** of second major side wall **414** and fourth corner wall **416**. Accordingly, container **400** may be collapsed without breaking the bonds between first major and minor bottom panels **138** and **168** and/or between second major and minor panels **186** and **196**. Further, bottom panels **138**, **168**, **186**, and **196** are received within side and corner walls **402**, **404**, **406**, **408**, **410**, **412**, **414**, and **416** to facilitate reducing the area occupied by container **400** when container **400** is collapsed. When container **400** is in such a configuration, container **400** is considered to be in a knocked-down and/or collapsed configuration.

To erect container **400** from the collapsed configuration, major side panels **26** and **34** are pulled apart and/or away from each other, which cause minor side panels **22** and **30** to move outwards. At least a portion of second minor bottom panel **186** slides under first major bottom panel **168** such that interior surface **12** of second minor bottom panel **186** contacts exterior surface **14** of first major bottom panel **168**. Similarly, at least a portion of base panel **164** of first minor bottom panel **138** slides under second major bottom panel **196** such that interior surface **12** of base panel **164** contacts exterior surface **14** of second major bottom panel **196**. As major side panels **26** and **34** continue to move apart, at least a portion of base panel **230** of second major bottom panel **196** slides under first major bottom panel **168** such that interior surface **12** of base panel **230** contacts exterior surface **14** of first major bottom panel **168**. While major side panels **26** and **34** are moved apart, first and second portions **56** and **58** of first corner panel **24** rotate apart about fold line **54**, and first and second portions **56** and **58** of third corner panel **32** rotate apart about fold line **54**. Further, first coupling tab **166** rotates about fold line **158** away from first minor bottom panel base panel **164**, and second coupling tab **232** rotates about fold line **224** away from second major bottom panel base panel **230**. As such, coupling tabs **166** and **232** are configured to downwardly direct bottom panels **138**, **168**, **186**, and **196** into cavity **420** when container **400** is moved from the collapsed configuration to an erect configuration.

As container **400** is erected from the collapsed configuration, bottom panels **138**, **168**, **186**, and **196** automatically lock into the positions that bottom panels **138**, **168**, **186**, and **196** were in before container **400** was collapsed, without further manipulation by a user. As such, bottom panels **138**, **168**, **186**, and **196** may be referred to as "automatically locking" bottom panels. When container **400** is substantially fully erected, bottom panels **138**, **168**, **186**, and **196** are substantially coplanar and form bottom wall **418**. Accordingly, container **400** is in the open configuration. As such, container **400** may be erected from the collapsed configuration without any additional adhesive and/or tape being applied to bottom panels **138**, **168**, **186**, and/or **196**. Container **400** may be closed as described above.

The above-described blank and container formed from the blank includes eight sides to provided added compression strength as compared to containers having less than eight sides, such as containers having four sides. Furthermore, the above-described bottom panels provide an automatically locking bottom wall that allows a user to collapse the container and then re-erect the container into a fully functional container without the use of addition adhesive and/or tape. As such, a user may collapse the container for storage and then re-erect the container for re-use more quickly and easily as compared to containers that require that bonds between panels be broken for collapse and re-bonded for re-use. Moreover, the above-described blank may be formed on a known blank-forming machine.

Exemplary embodiments of a container having an automatically locking bottom and blanks for making the same are described above in detail. The blanks and the container are not limited to the specific embodiments described herein, but rather, components of the blanks and/or the container may be utilized independently and separately from other components described herein. For example, the bottom panels of the blanks may also be used in combination with other type of container, and is not limited to practice with only the container as described herein. Rather, the exemplary embodiment can be implemented and utilized in connection with many other container applications.

Although specific features of various embodiments of the invention may be shown in some drawings and not in others, this is for convenience only. In accordance with the principles of the invention, any feature of a drawing may be referenced and/or claimed in combination with any feature of any other drawing.

This written description uses examples to disclose the invention, including the best mode, and also to enable any person skilled in the art to practice the invention, including making and using any devices or systems and performing any incorporated methods. The patentable scope of the invention is defined by the claims, and may include other examples that occur to those skilled in the art. Such other examples are intended to be within the scope of the claims if they have structural elements that do not differ from the literal language of the claims, or if they include equivalent structural elements with insubstantial differences from the literal languages of the claims.

What is claimed is:

1. A blank of sheet material for forming a container including automatically locking bottom panels, said blank comprising:

a pair of end panels, a pair of side panels and at least one corner panel interconnected to form a pair of opposing end walls, a pair of opposing side walls and a corner wall of the container, said at least one corner panel extending between an adjacent end panel and side panel;

a plurality of bottom panels for forming a bottom wall of the container, said bottom panels comprising a pair of bottom end panels each extending from a bottom edge of each of said pair of end panels along respective end fold lines, and a pair of bottom side panels each extending from a bottom edge of each of said pair of side panels along respective side fold lines, a first bottom side panel having a free edge spaced a first distance from a first side fold line of the respective side fold lines;

a first coupling tab integral with a first bottom end panel of said pair of bottom end panels, the first coupling tab having a free edge spaced the first distance from a first end fold line of the respective end fold lines for connecting the first bottom end panel to a first end panel of the pair of end panels, the free edge of the first coupling tab being substantially parallel to the free edge of the first bottom side panel; and

a second coupling tab integral with a second bottom side panel of said pair of bottom side panels, the second coupling tab having a free edge spaced the first distance from a second side fold line of the respective side fold lines for connecting the second bottom side panel to a second side panel of the pair of side panels, the free edge of the second coupling tab being substantially parallel to the free edge of the first bottom side panel,

wherein said first coupling tab attaches to one of said pair of bottom side panels, and said second coupling tab attaches to one of said pair of bottom end panels, said

coupling tabs configured to upwardly direct said bottom panels when the container is moved from an erected position to a knocked-down flat position and downwardly direct said bottom panels when the container is moved from a knocked-down flat position to an erected position.

2. A blank of sheet material in accordance with claim **1** further comprising a plurality of corner panels, each corner panel extending between each adjacent end panel and side panel for forming a substantially octagonal-shaped container.

3. A blank of sheet material in accordance with claim **2** wherein each of said plurality of corner panels comprises a bottom edge, at least one of said pair of bottom end panels and at least one of said bottom side panels comprise a corner portion extension proximate each of said bottom edges of said plurality of corner panels.

4. A blank in accordance with claim **1** wherein said pair of end panels comprises a first minor side panel and a second minor side panel, said pair of side panels comprises a first major side panel and a second major side panel, said at least one corner panel comprising a first corner panel, a second corner panel, and a third corner panel, wherein:

said first minor side panel comprises a first side edge and a second side edge;

said first corner panel extends from said second side edge of said first minor side panel;

said first major side panel extends from a side edge of said first corner panel that opposes said first minor side panel;

said second corner panel extends from a side edge of said first major side panel that opposes said first corner panel;

said second minor side panel extends from a side edge of said second corner panel that opposes said first major side panel;

said third corner panel extends from a side edge of said second minor side panel that opposes said second corner panel, said first, second, and third corner panels being narrower than said first and second minor side panels; and

said second major side panel extends from a side edge of said third corner panel that opposes said second minor side panel, said first and second major side panels being wider than said first and second minor side panels,

wherein said pair of bottom end panels further comprises a first minor bottom panel and a second minor bottom panel and said pair of bottom side panels comprises a first major bottom panel and a second major bottom panel,

said first minor bottom panel extending from a bottom edge of said first minor side panel, said first minor bottom panel comprising a base panel and said first coupling tab connected along a first tab fold line, a side edge of said first minor bottom panel at least partially defining said first coupling tab, wherein at least a portion of said side edge is at an acute angle to a bottom edge of said first corner panel;

said first major bottom panel extending from a bottom edge of said first major side panel;

said second minor bottom panel extending from a bottom edge of said second minor side panel; and

said second major bottom panel extending from a bottom edge of said second major side panel, said second major bottom panel comprising a base panel and said second coupling tab connected along a second tab fold line, a side edge of said second major bottom panel at least partially defining said second coupling tab, wherein at least a portion of said side edge is at an acute angle to a bottom edge of said third corner panel, said first and second major bottom panels being wider than said first and second minor bottom panels.

5. A blank in accordance with claim **4** wherein said first major bottom panel comprises an extension portion extending from a side portion thereof toward said second minor bottom panel, and said second major bottom panel comprises an extension portion extending from a side portion thereof away from said second coupling tab.

6. A blank in accordance with claim **4** wherein said first coupling tab is adjacent to a side edge of said first major bottom panel and said second coupling tab is adjacent a side edge of said second minor bottom panel.

7. A blank in accordance with claim **1** further comprising a plurality of top panels for forming a top wall of the container, said top panels comprising a pair of top end panels each extending from a top edge of each of said pair of end panels, and a pair of top side panels each extending from a top edge of said pair of side panels.

8. A blank in accordance with claim **7** wherein each of said plurality of corner panels comprises a top edge, at least one of said pair of top side panels comprises a corner portion extension proximate each of said top edges of said plurality of corner panels.

9. A blank in accordance with claim **7** wherein said pair of top end panels comprises a first minor top panel and a second minor top panel, and said pair of top side panels comprises a first major top panel and a second major top panel, wherein:

said first minor top panel extends from a top edge of said first minor side panel;

said first major top panel extends from a top edge of said first major side panel;

said second minor top panel extends from a top edge of said second minor side panel; and

said second major top panel extends from a top edge of said second major side panel.

10. A blank in accordance with claim **9** wherein said first major top panel comprises a first side extension that extends from said first major top panel toward said first minor top panel and a second side extension that extends from said first major top panel toward said second minor top panel, and wherein said second major top panel comprises a third side extension that extends from said second major top panel toward said second minor top panel and a fourth side extension that extends from said first major top panel away from said second minor top panel.

11. A blank in accordance with claim **7** wherein said pair of top side panels each comprise a pair of opposing slots and said pair of top end panels each comprise a pair of interlock tabs.

12. A blank in accordance with claim **11** wherein a first top side panel comprises a first slot and a second slot defined therein and a second top side panel comprises a third slot and a fourth slot defined therein, a first top end panel comprises a first interlock tab and a second interlock tab defined in a free edge thereof and a second top end panel comprises a third interlock tab and a fourth interlock tab defined in a free edge thereof, said first interlock tab is sized to be received within said fourth slot, said second interlock tab is sized to be received within said first slot, said third interlock tab is sized to be received within said second slot, and said fourth interlock tab is sized to be received within said third slot.

13. A blank in accordance with claim **1** further comprising:

a first glue tab extending from a side edge of one of said pair of end panels; and

a second glue tab extending from a side edge of one of said pair of side panels.

14. A blank in accordance with claim **1**, wherein the bottom end panels and the second bottom side panel have free edges

spaced at a second distance from respective fold lines, the second distance smaller than the first distance.

15. A blank in accordance with claim **1**, wherein the pair of bottom side panels overlap without being coupled together when the container is in the erected position.

16. A blank in accordance with claim **1**, wherein the free edge of the first bottom side panel, the free edge of the first coupling tab, and the free edge of the second coupling tab are substantially collinear.

17. A container formed from a blank of sheet material, said container including automatically locking bottom panels, said container comprising:

a pair of end walls, a pair of side walls, and at least one corner wall interconnected along a plurality of fold lines, said at least one corner wall extending between an adjacent end wall and side wall;

a bottom wall comprising a plurality of bottom panels, said plurality of bottom panels comprising a pair of bottom end panels each extending from a bottom edge of each of the pair of end walls along respective end fold lines, and a pair of bottom side panels each extending from a bottom edge of the pair of side walls along respective side fold lines, a first bottom side panel having a free edge spaced a first distance from a first side fold line of the respective side fold lines;

a first coupling tab integral with a first bottom end panel of the pair of bottom end panels, the first coupling tab having a free edge spaced the first distance from a first end fold line of the respective end fold lines for connecting the first bottom end panel to a first end panel of the pair of end panels, the free edge of the first coupling tab being substantially parallel to the free edge of the first bottom side panel; and

a second coupling tab integral with a second bottom side panel of the pair of bottom side panels, the second coupling tab having a free edge spaced the first distance from a second side fold line of the respective side fold lines for connecting the second bottom side panel to a second side panel of the pair of side panels, the free edge of the second coupling tab being substantially parallel to the free edge of the first bottom panel,

wherein said first coupling tab attaches to one of said pair of bottom side panels, and said second coupling tab attaches to one of said pair of bottom end panels, said coupling tabs configured to upwardly direct said bottom panels when said container is moved from an erected position to a knocked-down flat position and downwardly direct said bottom panels when said container is moved from a knocked-down flat position to an erected position.

18. A container in accordance with claim **17** further comprising a plurality of corner walls, each corner wall extending between each adjacent end wall and side wall for forming a substantially octagonal-shaped container.

19. A container in accordance with claim **18** wherein each of said plurality of corner walls comprises a bottom edge, at least one of said pair of bottom end walls and at least one of said bottom side walls comprise a corner portion extension proximate each of said bottom edges of said plurality of corner walls.

20. A container in accordance with claim **17** wherein said pair of end walls comprises a first minor side wall and a second minor side wall, said pair of side walls comprises a first major side wall and a second major side wall, said at least one corner wall comprises a first corner wall, a second corner wall, and a third corner wall, wherein:

said first corner wall is connected along a fold line to said first minor side wall;

said first major side wall is connected along a fold line to said first corner wall such that said first major side wall opposes said first minor side wall with respect to said first corner wall;

said second corner wall is connected along a fold line to said first major side wall such that said second corner wall opposes said first corner wall with respect to said first major side wall;

said second minor side wall is connected along a fold line to said second corner wall such that said second minor side wall opposes said first major side wall with respect to said second corner wall;

said third corner wall is connected along a fold line to said second minor side wall such that said third corner wall opposes said second corner wall with respect to said second minor side wall;

said second major side wall is connected along a fold line to said third corner wall such that said second major side wall opposes said second minor side wall with respect to said third corner wall, said first and second major side walls being wider than said first and second minor side walls;

said fourth corner wall is connected to said first minor side wall and said second major side wall along respective fold lines, said first, second, third, and fourth corner walls being narrower than said first and second minor side walls; and

said bottom wall is connected to bottom edges of said major and minor side walls, said bottom wall adjacent bottom edges of said corner walls, said pair of bottom end panels comprising a first minor bottom panel and a second minor bottom panel, said pair of bottom side panels comprising a first major bottom panel and a second major bottom panel, said first minor bottom panel comprising said first coupling tab and said second major bottom panel comprising said second coupling tab, wherein said first minor bottom panel is coupled to said first major bottom panel using said first coupling tab and said second minor bottom panel is coupled to said second major bottom panel using said second coupling tab.

21. A container in accordance with claim **17** wherein said pair of side walls is movable toward each other to collapse said container, wherein, when said container is in a collapsed configuration, said bottom panels are received at least within said side walls, said bottom panels being substantially parallel to said side walls in the collapsed configuration.

22. A container in accordance with claim **21** wherein said pair of side walls are movable away from each other to erect said container from the collapsed configuration without use additional bonding material, when said container is in an erected configuration, said bottom panels are automatically re-located with respect to said side walls and said end walls by movement of said side walls.

23. A container in accordance with claim **17** further comprising a top wall comprising a pair of top end panels extending from top edges of said pair of end panels and a pair of top side panels extending from top edges of said pair of side walls, said top panels movable from an opened configuration to a closed configuration.

24. A container in accordance with claim **23** wherein, when said top panels are in the closed configuration, said top end panels interlock with said top side panels to secure said top panels in the closed configuration.

25. A method of forming a container from a blank of sheet material, the blank including a pair of glue flaps, a pair of end

panels, a pair of side panels, and at least one corner panel connected in series along a plurality of fold lines, said method comprising:

rotating the side panels, end panels, and the at least one corner panel about respective fold lines toward an interior surface of the blank;

coupling a first glue flap to a second glue flap to form a pair of side walls, a pair of end walls, and at least two corner walls, wherein a first corner wall includes the first and second glue flaps;

rotating a first major bottom panel about a first fold line toward an interior surface of a first side wall, the first major bottom panel having a free edge spaced at a first distance from the first fold line;

rotating a first minor bottom panel about a second fold line toward an interior surface of a first end wall, an interior surface of the first minor bottom panel contacting an exterior surface of the first major bottom panel;

rotating a second major bottom panel about a third fold line toward an interior surface of a second side wall, an interior surface of the second major bottom panel contacting exterior surfaces of the first major and minor bottom panels;

securing a first coupling tab of the second major bottom panel to the first minor bottom panel, the coupling tab of the second major bottom panel having a free edge spaced the first distance from the third fold line, the free edge of the first coupling tab being substantially parallel to the free edge of the first major bottom panel;

rotating a second minor bottom panel about a fourth fold line toward an interior surface of a second end wall, an interior surface of the second minor bottom panel contacting exterior surfaces of the major bottom panels; and

securing a second coupling tab of the second minor bottom panel to the first major bottom panel, the second coupling tab of the second minor bottom panel having a free edge spaced the first distance from the fourth fold line, the free edge of the second coupling tab being substantially parallel to the free edge of the first major bottom panel.

26. A method in accordance with claim **25** further comprising moving the first side panel toward the second side panel to convert the container from an open position to a collapsed position, said moving the side panels together causes the bottom panels to rotate about respective fold lines toward the interior surfaces of the side panels and to be received within the side panels, when the container is in the collapsed position the bottom panels are substantially parallel to the side panels.

27. A method in accordance with claim **26** wherein the at least one corner panel includes a fold line that substantially bisects the at least one corner panel into a first portion and a second portion, wherein said moving the side panels together further comprises rotating the first portion of the at least one corner panel about the fold line toward the second portion of the first corner panel such that an interior surface of the first portion is adjacent an interior surface of the second portion.

28. A method in accordance with claim **26** further comprising moving the first side panel away from the second side panel to convert the container from the collapsed position to an erect position that is substantially similar to the open position without use of additional bonding material, said moving the side panels apart causes the bottom panels to rotate about respective fold lines away from the interior surfaces of the side panels and into the open position without additional manipulation by a user.

29. A method in accordance with claim **25** wherein the blank includes a pair of top end panels that are connected to respective end panels along fold lines and a pair of top side panels that are connected to respective side panels along fold lines, said method further comprising:

rotating the top end panels about the respective fold lines toward a cavity of the container; and

rotating the top side panels about the respective fold lines toward the top end panels to convert the container from an open position to a closed position.

30. A method in accordance with claim **25** wherein the blank includes a pair of top end panels that are connected to respective end panels along fold lines and a pair of top side panels that are connected to respective side panels along fold lines, the top end panels each including at least one interlock tab and the top side panels each including at least one slot sized to receive a respective interlock tab, said method further comprising:

rotating the top side panels about respective fold lines toward a cavity of the container;

rotating the minor top panels about respective fold lines toward the top side panels; and

interlocking the interlock tabs of the top end panels into the respective slots defined in the top side panels to convert the container from an open position to a closed position.

* * * * *