Patent Application

Residential Communications Gateway

Inventor: Eric DeLangis

April 12, 2002

Description:

The Residential Communications Gateway (RCG) is a communications device that combines all voice, data and video communications to and from a typical residence or small business for transmission over a Plain Old Telephone Service (POTS) line. The RCG does this by employing Voice over Internet Protocol (VoIP) technologies.

Purpose and Background:

The primary function of the RCG is to provide a platform for Competitive Local Exchange Companies (CLECs) to compete with the Local Exchange Companies (LECs) for residential voice and data services. The LECs have a strangle hold on the "last mile" of copper over which almost all residential customers receive their communications services. Today, most CLECs resell the existing services that are offered by the LECs. CLECs make their money by purchasing these services from the LECs at a discount and marking them up to the customer. Since these services are regulated and controlled by the Public Utilities Commission (PUC) the pricing for these services to the CLECs is set. The monthly CLEC discount is approximately $5 to $6 per line per month for basic rate services. This means, in

Competitive Access Systems EX2021
Red Hat, Inc. v. Competitive Access Systems, Inc.
IPR2025-01371

practicality, that a CLEC can only charge an additional $5 or $6 to the residential customer for basic rate services otherwise they would be more expensive than the LEC, and no one would buy the services from them; they would simply stay with the LEC.

To be competitive then, CLECs try to sell additional services such as call waiting, caller ID, etc. where they have as much as a 40% margin. Some CLECs also bundle long distance services with their packages as additional incentive to get residential customers to buy local telephone service from them. Since long distance fees are as low as 5 cents per minute to the customer, there is little profit in long distance for the CLECs. As it is, the pricing structure is such that the LECs will stay in control of the residential market, and the CLECs are nothing more than a marketing arm of the LEC. This structure also keeps the CLECs at an equal competitive advantage, or disadvantage, with respect to each other. The only thing that one CLEC could do to gain more customers is to be a better marketer. Since the CLECs are unable to discount their services because their margins are too slim as it is, the net effect is that the consumer looses by not really getting competition in the residential markets, and prices are kept artificially high.

For the CLECs to be truly competitive in the local telecommunications markets, they must be able to do more than simply resell the LECs services. CLECs must be able to offer many more features or services than those that the LEC provides, and they must be able to do this at a lower cost, in order to attract new customers.

So, what new services can the CLECs offer? As things stand today, there are none. However, by deploying an RCG in a residence, CLECs can offer advanced new calling features and services over the existing POTS line. Their costs for the POTS line from the LEC remains the same, but they can now charge for additional calling and messaging features that the LECs cannot offer. This is their competitive advantage.

Competitive Access Systems EX2021
Red Hat, Inc. v. Competitive Access Systems, Inc.
IPR2025-01371

Competition:

Many companies are currently trying to provide VoIP services to residential customers over high-speed or broadband backbones such as DSL and cable modems, over Internet connections via a computer. The high-speed services require expensive infrastructure enhancements to the local telephone companies' facilities and cable plants, as well as expensive modems at the customer's end. These services are also difficult to deploy and too complicated for the average user. Internet based VoIP services suffer from Internet delays access to a computer. Because of these problems, VoIP services are primarily targeted at the corporate market place. As technology progresses and as costs fall, these technologies will become more prevalent in the home market. But today, DSL and cable modems reach only a small segment of the population, and growth has failed to live up to initial expectations.

The Invention:

The RCG combines the capabilities and features of IP routers, Class 5 circuit switches and wireless LANs in a business style hands-free speakerphone device with a large display.

The RCG employs a large display with at least a 320 X 480 pixel resolution to provide video telephone services. The device is placed in a residence and connected to the primary POTS line coming from the LEC. Up to three standard telephones or FAX machines (or any combination) can be connected into the RCG. It also has a Universal Serial Bus (USB) and/or a 10-100 Ethernet interface for connection to a computer or a Local Area Network (LAN). In addition, it has an 802.11b wireless interface for wireless home networking as well as broadband-to-the-home services.

Competitive Access Systems EX2021
Red Hat, Inc. v. Competitive Access Systems, Inc.
IPR2025-01371

The system is installed in a customer's home by simply plugging it into an existing telephone jack. One or more standard telephones are then plugged into its three line-output jacks. This is the simplest and most basic usage. In this implementation, the user only is interested in gaining additional telephone lines into the household. No computer connection is required in order to use the system. However, if data communications are desired, then there are three additional interfaces for computer connectivity. Typically only one of the Ethernet or USB ports is used to connect to a PC or LAN. Both interfaces are provided for simplicity and flexibility for the users. The 802.11b interface is for wireless communications between the RCG and a PC or other RCGs as well as any other type of wireless device. A speakerphone and video camera are provided to support video telephone services.

Competitive Access Systems EX2021
Red Hat, Inc. v. Competitive Access Systems, Inc.
IPR2025-01371

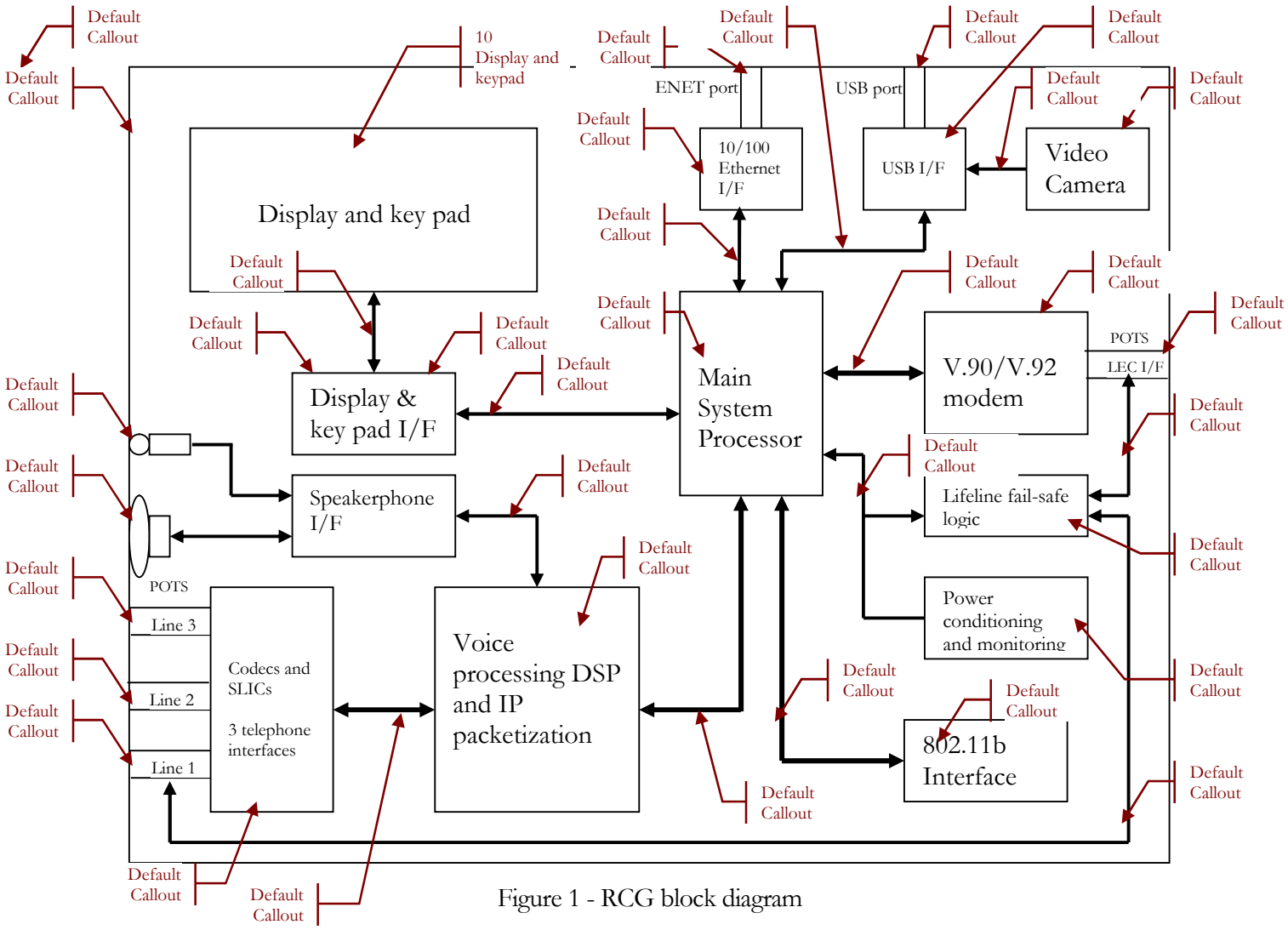

Figure 1 - RCG block diagram

The following discussion refers to figure 1. The RCG has a main system processor that is responsible for all house keeping and traffic routing tasks. The Main System Processor routes data to and from the Ethernet, USB, Modem, Voice DSP, 802.11b interface and the Display and Keypad.

Services offered by the RCG:

Competitive Access Systems EX2021
Red Hat, Inc. v. Competitive Access Systems, Inc.
IPR2025-01371

The RCG provides a total telecommunications communications services package for residential and small business customers. With the RCG, a CLEC can offer its customers dialtone for up to three separate telephone numbers per residence, all local and long distance services, 24/7 instant Internet access, a host of custom messaging and calling features, as well as Broadband access and lifeline service. All of these services can be offered over a customer's existing POTS line, and it doesn't require any network infrastructure build out like DSL and Cable services. Because there is no expensive network equipment required, it can be readily deployed throughout the country to expand the CLECs customer base quickly.

RCG is designed to enhance, not replace, the existing telephone line, enabling it to provide new combined packetized voice and data services. Meanwhile, all existing telecommunications infrastructure and equipment will continue to work seamlessly with RCG. Aside from simply installing the low cost RCG device in the home telephone wiring, no other equipment needs to be purchased by either the home owner or telephone companies. This eliminates the tremendously expensive infrastructure costs for communications companies that are trying to provide voice services using DSL or cable modems.

The RCG VIP Home Gateway features:

up to three additional telephone lines (that can be used with any standard telephone).

Ethernet and USB computer interfaces.

FAX support.

Competitive Access Systems EX2021
Red Hat, Inc. v. Competitive Access Systems, Inc.
IPR2025-01371

broadband networking for home computers and appliances as well as wide area networking. (These interfaces allow smart devices to communicate to other devices within the home, or over the Internet through RCG.)

flexibility, ease of use, simple setup.

automated, remote upgradability and configuration. (Requires the customer to do nothing.)

transparent user operation. (User doesn't have to know that any new technology is being employed)

100% compatible with existing public telephone system.

Video Telephone (future)

The Services:

With CAS's packet switching VoIP services, users gain:

no local or long distance usage charges.

no Internet access fees.

up to three new telephone numbers serviced over their existing POTS line. (No additional Local Telephone Company charges.)

lower monthly communication costs.

a host of new feature rich services such as:

multiple telephone calls at the same time.

voice messaging, follow me features, call forwarding.

automatic call back, conferencing, custom call routing.

home networking capabilities, all CLASS calling features, high speed broadband networking.

Competitive Access Systems EX2021
Red Hat, Inc. v. Competitive Access Systems, Inc.
IPR2025-01371

continuous 24/7 internet access.and many others.

All of these features are available even while connected to the Internet.

Very low cost of entry into the market, especially as compared to broadband alternatives.

Low cost for RCG™ hardware (less than $100 retail).

Many carriers exist to handle traffic at a low cost.

Substantial cost savings to end users.

New calling features that are not currently available to home users.

Operation:

Competitive Access Systems (CAS) can combine all of a typical home user's voice and data services into a single unified Voice over IP ("VoIP") service.

Call Flows:

Call originating from RCG and terminating at another RCG:

When a user picks up a telephone connected to the RCG an off hook condition is detected (Note: all BORSCHT telephony functions are performed by the RCG.) and dialtone is provided to the users telephone. The user then dials a 7, 10 or 11 digit number. This number is collected by the The RCG, using Session Initiation Protocol (SIP), sends a

Additional Topics to cover:

Broadband-Over-POTS

Lifeline support

QOS

VOIP Compression algorithms

Autosetup and configuration

Call flows

Competitive Access Systems EX2021
Red Hat, Inc. v. Competitive Access Systems, Inc.
IPR2025-01371