I, David Raskin, hereby declare as follows:

I. INTRODUCTION

1. I am the Vice President and Chief Financial Officer of Imperial Industrial Supply Co. ("Imperial") (d/b/a DuroMax Power Equipment). References to "we," "us," or "our" in this declaration are intended to refer to Imperial. I have been employed at Imperial since April 2001. Before I became Vice President and Chief Financial Officer of Imperial in January 2015, I worked as the Vice President of Sales & Marketing for Imperial since April 2012, and before that, I worked as a Sales Manager for Imperial since 2004.

2. I am not being compensated for my testimony or involvement in this matter.

II. BACKGROUND

3. Prior to November 1, 2013 (and prior to November 1, 2012), Imperial manufactured and sold a dual-fuel generator product configured to run on both gasoline and propane fuels, known as the DuroMax Dual Fuel Hybrid XP4400EH ("the DuroMax Generator")

4. Prior to November 1, 2013 (and prior to November 1, 2012), Imperial created and publicly distributed marketing materials and product literature describing the structure, features, and functionality of the DuroMax Generator. The purpose of Imperial's marketing materials and product literature was to generate public interest in Imperial's products and inform the public about the features, capabilities, and operation of Imperial's products. Prior to November 1, 2013 (and prior to November 1, 2012), it was Imperial's standard business practice to make its marketing materials and product literature publicly accessible by posting its materials online and by distributing them to customers and potential customers. For example, operating manuals such as the manual of Exhibit D describing the DuroMax Generator could be obtained by a member of the public upon purchase of the DuroMax Generator or upon request to an Imperial employee.

During this period, it was Imperial's standard business practice to provide a copy of its operating manuals, including as set forth in Exhibit D, with the purchase of each DuroMax Generator.

5. On August 26, 2013, Imperial uploaded a video of the DuroMax Generator to its YouTube channel, DuroMax Power Equipment. The video of the DuroMax Generator is accessible at the following link: https://www.youtube.com/watch?v=ZgKe9U4d7es. The purpose of this video was to describe the features and functionality of the DuroMax Generator and to generate public interest in the DuroMax Generator product to drive sales. This video has remained publicly available on YouTube continuously since the video was uploaded on August 26, 2013.

III. AUTHENTICITY AND PUBLIC AVAILABILITY OF EXHIBIT A

6. Exhibit A is a screen capture of the DuroMax Generator product listing where customers could purchase the DuroMax Generator online prior to November 1, 2013 (and prior to November 1, 2012). Exhibit A is taken from the Internet Archive Wayback Machine, and as noted in the upper right-hand corner of the page, shows the publicly available DuroMax Generator product listing sale page, as it appeared on October 19, 2012. Exhibit A can be found at the following link:
https://web.archive.org/web/20121019050958/http://www.maxtool.com:80/us/products/XP4400EH.asp?rt=2

7. Like DuroMax Power Equipment, Max Tool is another brand of Imperial. Specifically, Max Tool was and is a retail store through which consumers can purchase various brands of tools and other products, including generators manufactured by Imperial, including the DuroMax Generator. Prior to November 1, 2013 (and prior to November 1, 2012) I was involved in operations and sales for Max Tool, in connection with my employment at Imperial.

8. Exhibit A is a page from the Max Tool website. Exhibit A truthfully and accurately portrays the DuroMax Generator product listing page on the Max Tool website, as it appeared prior to November 1, 2013 (and prior to November 1, 2012).

IV. AUTHENTICITY AND PUBLIC AVAILABILITY OF EXHIBIT B

9. Exhibit B is a screen capture of another listing of the DuroMax Generator product where customers could purchase the DuroMax Generator online prior to November 1, 2013 (and prior to November 1, 2012). Exhibit B is taken from the Internet Archive Wayback Machine, and as noted in the upper right-hand corner of the page, shows the publicly available DuroMax Generator product listing sale page, as it appeared on October 18, 2012. Exhibit B can be found at the following link:
https://web.archive.org/web/20121018213424/http://www.generatorfactoryoutlet.com/gfo/products/XP4400EH.asp

10. Exhibit B is a page from the Generator Factory Outlet website. Like DuroMax Power Equipment and Max Tool, Generator Factory Outlet is another brand of Imperial. Generator Factory Outlet was and is an online retailer through which Imperial sold the DuroMax Generator prior to November 1, 2013 (and prior to November 1, 2012).

11. Exhibit B truthfully and accurately portrays the DuroMax Generator product listing page on the Generator Factory Outlet website, as it appeared prior to November 1, 2013 (and prior to November 1, 2012).

V. AUTHENTICITY AND PUBLIC AVAILABILITY OF EXHIBIT C

12. Prior to November 1, 2013 (and prior to November 1, 2012), Imperial sold the DuroMax Generator through the Amazon.com online marketplace. Exhibit C shows recorded sales of the DuroMax Generator by Imperial under the brand "Max Tool" through Amazon.com.

13. As shown under the "purchase-date" column in Exhibit C, purchases recorded in Exhibit C range from October 23, 2012, to October 30, 2012. As shown under the "product-name" column, such sales recorded in Exhibit C were for the "DuroMax XP4400EH 4,400 Watt 7.0 HP Dual Fuel Propane / Gas Powered Portable Electric Start Generator."

14. I know this because Imperial's typical process of recording its sales from the online marketplace Amazon.com involved documenting the available purchase and status information of each Imperial product ordered using data received from Amazon.com. Recorded sales data for Imperial products, including the DuroMax Generator, were updated after each order was shipped or cancelled. Merchant data, order id, shipping status, order date, last updated date, and product name were all among the data regularly recorded. This process was Imperial's approach when recording sales from Amazon.com between October 23, 2012, and October 31, 2012.

15. The "last-updated-date" is the date that Imperial recorded the order of the DuroMax Generator as having been shipped to the customer. To best of my knowledge, all of these shipments would have been shipped through FedEx ground shipments. These FedEx ground shipments would have all been delivered to the customer between one and five days after shipping.

16. Exhibit C truthfully and accurately lists sales of the DuroMax Generator through Amazon.com prior to November 1, 2012 (and therefore prior to November 1, 2013). Each of these sales would have included a copy of Exhibit D, the DuroMax Generator Operator's Manual. My recollection is that we made additional sales of the DuroMax Generator through other sales platforms prior to November 1, 2012 (and that we made additional sales of the DuroMax Generator through Amazon and other sales platforms prior to November 1, 2013).

VI. AUTHENTICITY AND PUBLIC AVAILABILITY OF EXHIBIT D

17. Exhibit D is a true and correct copy of the DuroMax Generator XP4400EH Operator's Manual.

18. As shown below, Imperial created Exhibit D at least as early as June 27, 2012. This is reflected in the screenshot of the Exhibit D document metadata depicted in Exhibit E. Exhibit D was publicly distributed to customers of the DuroMax Generator and members of the public prior to November 1, 2013 (and prior to November 1, 2012). For example, Exhibit D was distributed at least to customers in connection with the sales recorded in Exhibit C.

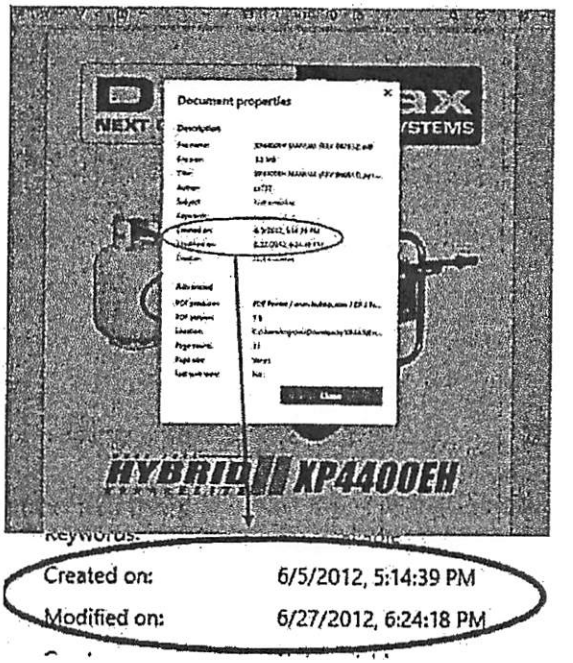

Exhibit E (annotated).

19. Prior to November 1, 2013 (and prior to November 1, 2012) it was Imperial's standard business practice to provide a copy of the operator's manual of Exhibit D to customers with the purchase of the DuroMax Generator by including a paper copy of the operator's manual of Exhibit D in the product packaging of the DuroMax Generator. The operator's manual of

Exhibit D could be obtained by a member of the public upon purchase of the DuroMax Generator or upon request to an Imperial employee.

20. Exhibit D truthfully and accurately portrays and describes the components and assembly of the DuroMax Generator.

21. Exhibit E truthfully and accurately reflects the document metadata, including the dates of creation and last modification, of Exhibit D.

VII. AUTHENTICITY AND PUBLIC AVAILABILITY OF EXHIBIT F

22. Exhibit F is a true and correct copy of a marketing brochure describing the DuroMax Generator.

23. Prior to November 1, 2013, it was Imperial's standard business practice to provide marketing materials, such as Exhibit F, to members of the public who were interested in buying or learning more about its products.

24. Prior to November 1, 2013, Exhibit F was publicly distributed by Imperial employees to members of the public who were interested in buying or learning more about its products.

25. As shown below, Imperial created Exhibit F at least as early as May 17, 2013. This is reflected in the screenshot of the Exhibit F document metadata of Exhibit G.

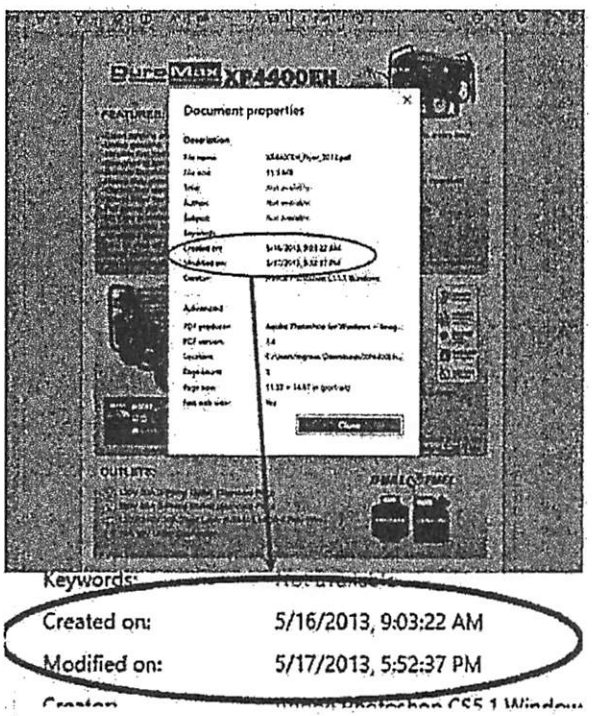

Exhibit G (annotated).

26. Exhibit F truthfully and accurately portrays and describes the characteristics and functionality of the DuroMax Generator as of the date that the brochure was created.

27. Exhibit G truthfully and accurately reflects the document metadata, including the dates of creation and last modification, of Exhibit F.

VIII. AUTHENTICITY AND PUBLIC AVAILABILITY OF EXHIBIT H

28. Exhibit H is a true and correct copy of the Certificate of Conformity with the Clean Air Act from the Environmental Protection Agency for the engine used in the DuroMax Generator, dated February 27, 2013.

IX. AUTHENTICITY AND PUBLIC AVAILABILITY OF EXHIBIT I

29. Exhibit I is a true and correct copy of the DuroMax Generator XP4400EH 2013 Operator's Manual.

30. As shown below, Imperial created Exhibit I at least as early as August 23, 2013. This is reflected in the screenshot of the Exhibit I document metadata depicted in Exhibit J. Exhibit I was publicly distributed to customers of the DuroMax Generator and members of the public after August 23, 2013 and prior to November 1, 2013 (and prior to June 12, 2014).

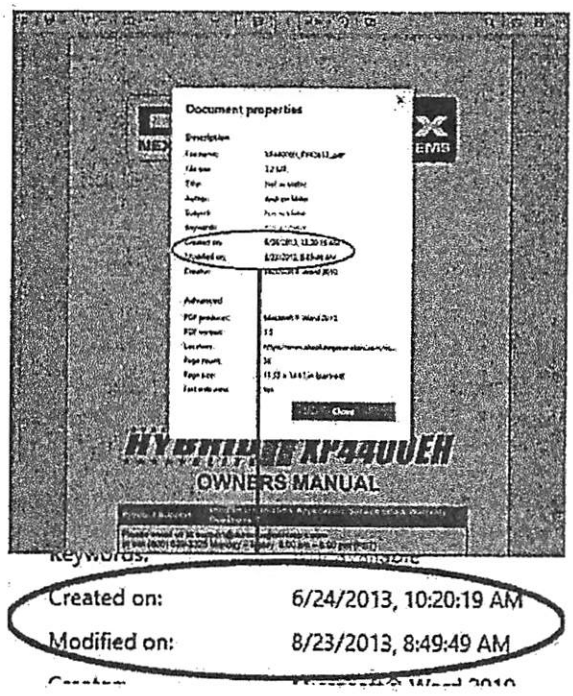

Exhibit J (annotated).

31. The operator's manual of Exhibit I was distributed to dealers and those who requested a copy of the manual. The recipients of the operator's manual were free to post copies of the manual online. For example, Exhibit I appears to have been posted online by Absolute Generators, a dealer of the DuraMax Generator, at least as early as November 4, 2014, as shown below at the following URL link:

https://www.google.com/search?q=Duromax+XP4400EH+dual+fuel+generator+manual&sca_esv=9d62b89f1e8f3e7d&tbs=cdr%3A1%2Ccd_min%3A1%2F1%2F2011%2Ccd_max%3A12%2F31%2F2015&sxsrf=AHTn8zrWVUE73y3h2uL2YlnMiX0nuxffeg%3A1745506300936&ei=_E8

KaPfxOIjsptQP_NSK2AQ&ved=0ahUKEwj335TY9fCMAxUItokEHXyqAksQ4dUDCBI&uact=5&oq=Duromax+XP4400EH+dual+fuel+generator+manual&gs_lp=Egxnd3Mtd2l6LXNlcnAiK0R1cm9tYXggWFA0NDAwRUggZHVhbCBmdWVsIGdlbmVyYXRvciBtYW51YWwyBBAjGCcyBBAjGCcyBBAjGCcyBRAAGO8FMggQABiABBiiBDIIEAAYgAQYogQyCBAAGIAEGKIEMggQABiABBiiBEjDCVDeB1jeB3ACeACQAQCYAWGgAWGqAQExuAEDyAEA-AEBmAIDoAJvwgIIEAAYsAMY7wXCAgsQABiABBiwAxiiBJgDAIgGAZAGBZIHAzIuMaAHiQuyBwMwLjG4B2Y&sclient=gws-wiz-serp.

32. Prior to November 1, 2013 (and prior to June 12, 2014), it was Imperial's standard business practice to provide a copy of the latest version of its operator's manual for a particular product to the customer when it made a sale of that product. For example, after the creation of Exhibit I and prior to November 1, 2013 (and prior to June 12, 2014), it was

Imperial's standard business practice to provide a copy of Exhibit I to customers with the purchase of the DuroMax Generator by including a paper copy of the operator's manual of Exhibit I in the product packaging of each DuroMax Generator. The operator's manual of Exhibit I could be obtained by a member of the public upon purchase of the DuroMax Generator or upon request to an Imperial employee. It was also Imperial's standard business practice to provide the latest copy of the operator's manual to its dealers. For example, Imperial's standard practice was to provide dealers selling the DuroMax Generator the latest copy of the operator's manual. Those dealers were free to publicly distribute these manuals or post them online.

33. Exhibit I truthfully and accurately portrays and describes the components and assembly of the DuroMax Generator.

34. Exhibit J truthfully and accurately reflects the document metadata, including the dates of creation and last modification, of Exhibit I.

X. CERTIFICATION

35. I declare that all statements made herein of my own knowledge are true and that all statements made on information and belief are believed to be true; and that these statements were made with knowledge that willful false statements and the like so made are punishable by fine or imprisonment, or both, under 18 U.S.C. § 1001. I also declare under penalty of perjury under the laws of the United States of America that the foregoing is true and correct.

Signature: _____

Name: David Raskin

Title: Vice President and Chief Financial Officer, Imperial Industrial Supply Co.

Date: 5-07-25

EXHIBIT A

INTERNET ARCHIVE Wayback Machine
http://www.maxtool.com/us/products/XP4400EH.asp?rt=2 Go
4 captures
19 Oct 2012 - 1 Jun 21
SEP OCT APR
19
2011 2012 2013
About this capture

MAX Tool
Free Shipping on Orders Over $25 or More.
More Info »
GREAT GIFT IDEAS CLICK HERE
Order Online or Call 1-800-629-3325

Order Online or Call 1-800-629-3325.
For Sales Outside the US Order Online or Call 909-568-2800

FREE SHIPPING ON ORDERS OVER $25 OR MORE. MORE DETAILS »

DuroMax Duel Fuel 4,400 Watt Hybrid Propane/Gasoline Portable Generator With Wheel Kit And Electric Start

Item Number: XP4400EH

Qty: 1

Regular Price ~~$649.99~~

Sale Price: $499.99

Free Shipping

ADD TO CART

Enlarge

Bookmark & Share

TANK NOT INCLUDED

Description

As global energy consumption grows at exponential rates, so does the demand for energy solutions that are both more environmentally responsible and more efficient. The DuroMax XP4400EH has a dual fuel system that operates on either standard gasoline or cleaner burning liquid propane which can more than double you generator's run time.

With the XP4400EH, operating on propane will not gum up or foul your generator's carburetor, and will give you quick, reliable starts every time. It only takes a few seconds to switch over from regular gas to propane, and with the flexible line, you can easily hook up any size propane tank including the one from your barbeque. Unlike gasoline, propane can be stored for years without going bad.

FEATURES

- Clean running propane will not gum up or foul the carburetor for quick and reliable starts every time.
- Unlike gasoline, liquid propane can be stored for years.
- Flexible line allows for connecting to tanks of any size.
- Designed to run on gasoline or propane for maximum convenience.
- Durable DuroStar 7.0 Hp, air cooled with low oil shutoff.
- Heavy duty steel frame with four point fully isolated motor mounts for smooth and quiet operation.
- Electric Key Start for easy starting when you need it.
- Wheel kit w/ front handle for easy transporting.
- Full power panel with engine shutoff switch, volt meter, circuit breaker and power outlets.
- (2) Fully protected 120V outlets & (1) 120V/240V twist-lock outlet.
- Approximately 20 Hours run time (propane) 8 Hours run time (gasoline)
- All steel 4 gal. fuel tank with ez-read gauge.
- Low oil shut-off protects engine.
- Super quiet muffler reduces engine noise,
- Idle control holds RPM at a constant level even under heavy loads for fuel savings and noise reduction

SPECIFICATIONS

Runs both gasoline and propane

Full featured power panel

Quick Cart
Proceed to Checkout
Welcome, Shopper
Subotal: $0.00
Check Out
VeriSign SSL for secure shopping.
Items in Your Cart

Need Answers?
24 HOURS A DAY
Talk to a Real Person
(Se Habla Español)
Call Toll Free
1-800-629-3325

Now Accepting and Amazon Checkout

- Max AC Output: 4400 watts
- Rated AC Output: 3500 watts
- Current (120V/240VAC & 12VDC)
- 2) 120v 20A 3-prong outlets (Standard Household plug)
- 120v/240v 30A twist lock (NEMA L14-30 3 Pole 4 Wire)
- Low oil shutoff.
- EPA approved engines.
- Super quiet exhaust w/ built-in spark arrestor.
- Electric Key and EZ-Pull Recoil start.
- 7.0 Hp air cooled engine
- Fuel Tank Capacity: 4 gal
- Decibel: 69 dBA
- Gasoline Run-Time [@ 50% Max Output]: 8.0 hrs
- Propane Run-Time [@ 50% Max Output]: 20.0 hrs

All-terrain never flat tires

Flip-up stow away handles

INCLUDES

- New improved all-terrain never flat tires.
- Flip-Up stow away Handles.
- Spark plug wrench

WARRANTY

- 1 Year Full Parts Warranty
- 30 Day Replacement Warranty

**** This Generator Can Not Be Shipped to California ****

- Shipping Weight: 132.00 lbs.

Item Number: **XP4400EH**

Regular Price ~~$649.99~~

Sale Price: $499.99

Qty: 1

Free Shipping

ADD TO CART CHECKOUT

Search

View Cart | Contact Us | Policies

United States: 1-800-629-3325 Outside U.S.: (909) 568-2800

Copyright © 2012 Max Tool, All rights reserved.
All logos are trademarks of their respected owners.

EXHIBIT B

INTERNET ARCHIVE Wayback Machine
http://www.generatorfactoryoutlet.com/gfo/products/XP4400EH.asp Go
2 captures
18 Oct 2012 - 18 Oct 2012
SEP OCT NOV
2011 18 2012 2013
About this capture

IN STOCK READY TO SHIP
Click to See All Models

MAILING LIST
Enjoy special offers that only our subscribers will receive
Free & Easy To Sign Up
Type Email Address
SUBMIT

Category
- Gasoline Generators
- Diesel Generators
- Propane Generators
- Digital Generators
- Welding Generators

Brands
- DuroMax
- DuroMax Elite Series
- DuroStar
- All Power
- Reliance Controls

Accessories
- Gasoline Caddies
- Gasoline Powered Engines
- Gasoline Powered Water Pumps
- Wheel Kits
- RV Adapters
- Indoor Transfer Switches
- Outdoor Transfer Switches
- Inlet Boxes
- Power Cords
- Covers

BE A NEIGHBORHOOD HERO
BUY BIG SAVE BIG PALLET DISCOUNT PROGRAM

IN A NATURAL DISASTER A RELIABLE, WORKING GENERATOR IS WORTH ITS WEIGHT IN GOLD.

Quick Cart
Proceed to Checkout
Welcome, Shopper
Want a Free Catalog? Click Here
Subtotal: $0.00
Check Out
SECURE networksolutions
Items in Your Cart

DuroMax Duel Fuel 4,400 Watt Hybrid Propane/Gasoline Portable Generator With Wheel Kit And Electric Start

Item Number: XP4400EH
Regular Price ~~$649.99~~
Sale Price: $499.99
Qty: 1
Free Shipping
Instock
ADD TO CART
WARRANTY INFORMATION

Need Answers?
24 HOURS A DAY Talk to a Real Person (Se Habla Español)
Call Toll Free 1-800-629-4329
Its Never Been EASIER to Pay!
EASY CHECKOUT WITH amazon.com CHECKOUT PayPal
All Major Debit & Credit Cards Accepted
>> Click For More Info

Description | Customer Reviews

made it here THIS IS A 404 PAGE which means that the page you went to does not exist.

As global energy consumption grows at exponential rates, so does the demand for energy solutions that are both more environmentally responsible and more efficient. The DuroMax XP4400EH has a dual fuel system that operates on either standard gasoline or cleaner burning liquid propane which can more than double you generator's run time.

With the XP4400EH, operating on propane will not gum up or foul your generator's carburetor, and will give you quick, reliable starts every time. It only takes a few seconds to switch over from regular gas to propane, and with the flexible line, you can easily hook up any size propane tank including the one from your barbeque. Unlike gasoline, propane can be stored for years without going bad.

FEATURES

- Clean running propane will not gum up or foul the carburetor for quick and reliable starts every time.
- Unlike gasoline, liquid propane can be stored for years.
- Flexible line allows for connecting to tanks of any size.
- Designed to run on gasoline or propane for maximum convenience.
- Durable DuroStar 7.0 Hp, air cooled with low oil shutoff.
- Heavy duty steel frame with four point fully isolated motor mounts for smooth and quiet operation.
- Electric Key Start for easy starting when you need it.
- Wheel kit w/ front handle for easy transporting.
- Full power panel with engine shutoff switch, volt meter, circuit breaker and power outlets.
- (2) Fully protected 120V outlets & (1) 120V/240V twist-lock outlet.
- Approximately 20 Hours run time (propane) 8 Hours run time (gasoline)
- All steel 4 gal. fuel tank with ez-read gauge.
- Low oil shut-off protects engine.
- Super quiet muffler reduces engine noise.
- Idle control holds RPM at a constant level even under heavy loads for fuel savings and noise reduction

SPECIFICATIONS

- Max AC Output: 4400 watts
- Rated AC Output: 3500 watts
- Current (120V/240VAC & 12VDC)
- 2) 120v 20A 3-prong outlets (Standard Household plug)
- 120v/240v 30A twist lock (NEMA L14-30 3 Pole 4 Wire)

Runs both gasoline and propane

Full featured power panel

- Low oil shutoff.
- EPA approved engines.
- Super quiet exhaust w/ built-in spark arrestor.
- Electric Key and EZ-Pull Recoil start.
- 7.0 Hp air cooled engine
- Fuel Tank Capacity: 4 gal
- Decibel: 69 dBA
- Gasoline Run-Time [@ 50% Max Output]: 8.0 hrs
- Propane Run-Time [@ 50% Max Output]: 20.0 hrs

All-terrain never flat tires

Flip-up stow away handles

INCLUDES

- New improved all-terrain never flat tires.
- Flip-Up stow away Handles.
- Spark plug wrench

WARRANTY

- 1 Year Full Parts Warranty
- 30 Day Replacement Warranty

**** This Generator Can Not Be Shipped to California ****

made it here THIS IS A 404 PAGE which means that the page you went to does not exist.

- Shipping Weight: 132.00 lbs.

Item Number:	Regular Price	Sale Price:	Qty:
XP4400EH	~~$649.99~~	$499.99	1

Instock ADD TO CART CHECKOUT

Portable Generators You Can Count On. Search

F.A.Q's Have Questions? Get Answers. | Contact Us Call or Email 24 Hrs A Day

View Cart | About Us | Warranty | Policy | Security & Privacy | Site Map

SECURE DATA ENCRYPTED network solutions

United States: 1-800-629-4329 Outside U.S.: (909) 568-2800

Copyright © 2012 - Portable Generator - Gas Generator - Generator Factory Outlet
All Rights Reserved.
All logos are trademarks of their respected owners.

WARRANTY INFORMATION

EXHIBIT C

amazon-order-id	merchant-order-id	purchase-date	last-updated-date	order-status	fulfillment-channel
104-2044759-7309838	8593014	2012-10-26T03:12:41+00:00	2012-10-27T00:40:20+00:00	Shipped	Merchant
102-5578407-4282668	8593816	2012-10-26T20:15:45+00:00	2012-10-27T19:40:24+00:00	Shipped	Merchant
105-3132342-6193801		2012-10-26T19:20:46+00:00	2012-10-26T19:31:02+00:00	Cancelled	Merchant
104-0334290-5502625	8594330	2012-10-27T03:19:41+00:00	2012-10-30T20:40:15+00:00	Shipped	Merchant
105-0017813-8690651	8593385	2012-10-26T15:52:48+00:00	2012-10-27T19:40:02+00:00	Shipped	Merchant
002-8172801-0157003	8592955	2012-10-26T01:30:12+00:00	2012-10-27T00:40:18+00:00	Shipped	Merchant
103-1874923-5023465	8595860	2012-10-28T13:14:26+00:00	2012-10-30T17:41:21+00:00	Shipped	Merchant
104-8752092-9107440	8592644	2012-10-25T17:29:32+00:00	2012-10-26T01:40:00+00:00	Shipped	Merchant
105-3629942-4905016	8593489	2012-10-26T14:56:37+00:00	2012-10-27T19:40:09+00:00	Shipped	Merchant
104-0224537-3849874	8593390	2012-10-26T13:02:33+00:00	2012-10-27T19:40:04+00:00	Shipped	Merchant
103-5427570-7073051	8595187	2012-10-27T19:55:58+00:00	2012-10-30T20:40:22+00:00	Shipped	Merchant
105-8646890-0753847	8593894	2012-10-26T21:13:36+00:00	2012-10-30T20:40:08+00:00	Shipped	Merchant
102-9238418-3228204	8592741	2012-10-25T20:45:04+00:00	2012-10-29T20:40:04+00:00	Shipped	Merchant
103-8300809-8932231	8592742	2012-10-25T20:40:25+00:00	2012-10-29T20:40:03+00:00	Shipped	Merchant
103-3190369-2581820	8591182	2012-10-23T01:10:30+00:00	2012-10-24T01:39:52+00:00	Shipped	Merchant
105-8758783-7303450	8596018	2012-10-28T15:20:09+00:00	2012-10-31T01:40:10+00:00	Shipped	Merchant
102-8567768-9793847	8595641	2012-10-28T03:50:08+00:00	2012-10-30T20:40:25+00:00	Shipped	Merchant
105-2639185-8837865	8593149	2012-10-26T11:11:09+00:00	2012-10-27T00:40:25+00:00	Shipped	Merchant
002-7677017-2854638	8593739	2012-10-26T19:12:45+00:00	2012-10-27T19:40:21+00:00	Shipped	Merchant
103-4436688-0054619	8593373	2012-10-26T16:23:14+00:00	2012-10-27T19:39:59+00:00	Shipped	Merchant
102-8171983-3103457	8595277	2012-10-27T21:15:20+00:00	2012-10-30T17:41:21+00:00	Shipped	Merchant
002-8284714-0345032	8591510	2012-10-23T15:40:45+00:00	2012-10-24T01:39:51+00:00	Shipped	Merchant
105-7969300-5021051	8592929	2012-10-26T01:05:16+00:00	2012-10-27T00:40:21+00:00	Shipped	Merchant
103-9222814-3896218	8594317	2012-10-27T03:19:09+00:00	2012-10-30T20:40:16+00:00	Shipped	Merchant
105-6640634-0651422	8593417	2012-10-26T16:41:08+00:00	2012-10-27T19:40:02+00:00	Shipped	Merchant
104-0062955-0790671	8594137	2012-10-27T00:19:36+00:00	2012-10-30T20:40:14+00:00	Shipped	Merchant
103-1551135-1927418	8595554	2012-10-28T01:48:52+00:00	2012-10-30T17:41:21+00:00	Shipped	Merchant
104-1854894-6366640	8594940	2012-10-27T17:06:28+00:00	2012-10-30T17:41:18+00:00	Shipped	Merchant
102-5445500-9751407		2012-10-26T19:51:55+00:00	2012-10-26T19:52:41+00:00	Cancelled	Merchant
102-7682321-6797803		2012-10-25T20:30:16+00:00	2012-10-25T20:34:48+00:00	Cancelled	Merchant
103-8548071-2349014	8596000	2012-10-28T14:53:57+00:00	2012-10-31T01:40:08+00:00	Shipped	Merchant
103-6624779-9401813	8595158	2012-10-27T19:37:22+00:00	2012-10-30T17:41:18+00:00	Shipped	Merchant

102-5509228-4613039	8592806	2012-10-25T22:15:11+00:00	2012-10-29T20:40:04+00:00	Shipped	Merchant
105-7797171-9171401	8593837	2012-10-26T20:28:57+00:00	2012-10-27T19:54:02+00:00	Cancelled	Merchant
102-3136609-8821055	8594236	2012-10-27T02:20:12+00:00	2012-10-30T20:40:13+00:00	Shipped	Merchant
103-4363804-9976257		2012-10-26T20:52:36+00:00	2012-10-26T22:56:34+00:00	Cancelled	Merchant
102-0882298-3480224	8593180	2012-10-26T12:20:41+00:00	2012-10-27T00:40:26+00:00	Shipped	Merchant

sales-channel	order-channel	url	ship-service-level
Amazon.com			Standard
Amazon.com			Standard
Amazon.com			Standard
Amazon.com			Standard
Amazon.com			Standard
Amazon.com			Standard
Amazon.com			Standard
Amazon.com			Standard
Amazon.com			Standard
Amazon.com			Standard
Amazon.com			Standard
Amazon.com			Standard
Amazon.com			Standard
Amazon.com			Standard
Amazon.com			Standard
Amazon.com			Standard
Amazon.com			Standard
Amazon.com			Standard
Amazon.com			Standard
Amazon.com			Standard
Amazon.com			Standard
Amazon.com			Standard
Amazon.com			Standard
Amazon.com			Standard
Amazon.com			Standard
Amazon.com			Standard
Amazon.com		http://www.amazon.com	Standard
Amazon.com			Standard
Amazon.com			Standard
Amazon.com			Standard
Amazon.com			Standard
Amazon.com			Standard
Amazon.com			Standard

Amazon.com	Standard
Amazon.com	Standard
Amazon.com	Standard
Amazon.com	Standard
Amazon.com	Standard

product-name	sku	asin
DuroMax XP4400EH 4,400 Watt 7.0 HP Dual Fuel Propane / Gas Powered Portable Electric Start Generator	XP4400EH	B009RBKGZC
DuroMax XP4400EH 4,400 Watt 7.0 HP Dual Fuel Propane / Gas Powered Portable Electric Start Generator	XP4400EH	B009RBKGZC
DuroMax XP4400EH 4,400 Watt 7.0 HP Dual Fuel Propane / Gas Powered Portable Electric Start Generator	XP4400EH	B009RBKGZC
DuroMax XP4400EH 4,400 Watt 7.0 HP Dual Fuel Propane / Gas Powered Portable Electric Start Generator	XP4400EH	B009RBKGZC
DuroMax XP4400EH 4,400 Watt 7.0 HP Dual Fuel Propane / Gas Powered Portable Electric Start Generator	XP4400EH	B009RBKGZC
DuroMax XP4400EH 4,400 Watt 7.0 HP Dual Fuel Propane / Gas Powered Portable Electric Start Generator	XP4400EH	B009RBKGZC
DuroMax XP4400EH 4,400 Watt 7.0 HP Dual Fuel Propane / Gas Powered Portable Electric Start Generator	XP4400EH	B009RBKGZC
DuroMax XP4400EH 4,400 Watt 7.0 HP Dual Fuel Propane / Gas Powered Portable Electric Start Generator	XP4400EH	B009RBKGZC
DuroMax XP4400EH 4,400 Watt 7.0 HP Dual Fuel Propane / Gas Powered Portable Electric Start Generator	XP4400EH	B009RBKGZC
DuroMax XP4400EH 4,400 Watt 7.0 HP Dual Fuel Propane / Gas Powered Portable Electric Start Generator	XP4400EH	B009RBKGZC
DuroMax XP4400EH 4,400 Watt 7.0 HP Dual Fuel Propane / Gas Powered Portable Electric Start Generator	XP4400EH	B009RBKGZC
DuroMax XP4400EH 4,400 Watt 7.0 HP Dual Fuel Propane / Gas Powered Portable Electric Start Generator	XP4400EH	B009RBKGZC
DuroMax XP4400EH 4,400 Watt 7.0 HP Dual Fuel Propane / Gas Powered Portable Electric Start Generator	XP4400EH	B009RBKGZC
DuroMax XP4400EH 4,400 Watt 7.0 HP Dual Fuel Propane / Gas Powered Portable Electric Start Generator	XP4400EH	B009RBKGZC
DuroMax XP4400EH 4,400 Watt 7.0 HP Dual Fuel Propane / Gas Powered Portable Electric Start Generator	XP4400EH	B009RBKGZC
DuroMax XP4400EH 4,400 Watt 7.0 HP Dual Fuel Propane / Gas Powered Portable Electric Start Generator	XP4400EH	B009RBKGZC
DuroMax XP4400EH 4,400 Watt 7.0 HP Dual Fuel Propane / Gas Powered Portable Electric Start Generator	XP4400EH	B009RBKGZC
DuroMax XP4400EH 4,400 Watt 7.0 HP Dual Fuel Propane / Gas Powered Portable Electric Start Generator	XP4400EH	B009RBKGZC
DuroMax XP4400EH 4,400 Watt 7.0 HP Dual Fuel Propane / Gas Powered Portable Electric Start Generator	XP4400EH	B009RBKGZC
DuroMax XP4400EH 4,400 Watt 7.0 HP Dual Fuel Propane / Gas Powered Portable Electric Start Generator	XP4400EH	B009RBKGZC
DuroMax XP4400EH 4,400 Watt 7.0 HP Dual Fuel Propane / Gas Powered Portable Electric Start Generator	XP4400EH	B009RBKGZC
DuroMax XP4400EH 4,400 Watt 7.0 HP Dual Fuel Propane / Gas Powered Portable Electric Start Generator	XP4400EH	B009RBKGZC
DuroMax XP4400EH 4,400 Watt 7.0 HP Dual Fuel Propane / Gas Powered Portable Electric Start Generator	XP4400EH	B009RBKGZC
DuroMax XP4400EH 4,400 Watt 7.0 HP Dual Fuel Propane / Gas Powered Portable Electric Start Generator	XP4400EH	B009RBKGZC
DuroMax XP4400EH 4,400 Watt 7.0 HP Dual Fuel Propane / Gas Powered Portable Electric Start Generator	XP4400EH	B009RBKGZC
DuroMax XP4400EH 4,400 Watt 7.0 HP Dual Fuel Propane / Gas Powered Portable Electric Start Generator	XP4400EH	B009RBKGZC
DuroMax XP4400EH 4,400 Watt 7.0 HP Dual Fuel Propane / Gas Powered Portable Electric Start Generator	XP4400EH	B009RBKGZC
DuroMax XP4400EH 4,400 Watt 7.0 HP Dual Fuel Propane / Gas Powered Portable Electric Start Generator	XP4400EH	B009RBKGZC

DuroMax XP4400EH 4,400 Watt 7.0 HP Dual Fuel Propane / Gas Powered Portable Electric Start Generator	XP4400EH	B009RBKGZC
DuroMax XP4400EH 4,400 Watt 7.0 HP Dual Fuel Propane / Gas Powered Portable Electric Start Generator	XP4400EH	B009RBKGZC
DuroMax XP4400EH 4,400 Watt 7.0 HP Dual Fuel Propane / Gas Powered Portable Electric Start Generator	XP4400EH	B009RBKGZC
DuroMax XP4400EH 4,400 Watt 7.0 HP Dual Fuel Propane / Gas Powered Portable Electric Start Generator	XP4400EH	B009RBKGZC
DuroMax XP4400EH 4,400 Watt 7.0 HP Dual Fuel Propane / Gas Powered Portable Electric Start Generator	XP4400EH	B009RBKGZC

item-status	quantity	currency	item-price	item-tax	shipping-price	shipping-tax	gift-wrap-price	gift-wrap-tax	item-promotion-discount
Shipped	1	USD	499.99		0		0		
Shipped	1	USD	499.99		0		0		
	0								
Shipped	1	USD	599.99		0		0		
Shipped	1	USD	499.99		0		0		
Shipped	1	USD	499.99		0		0		
Shipped	1	USD	649.99		0		0		
Shipped	1	USD	499.99		0		0		
Shipped	1	USD	499.99		0		0		
Shipped	1	USD	499.99		0		0		
Shipped	1	USD	649.99		0		0		
Shipped	1	USD	599.99		0		0		
Shipped	1	USD	499.99		0		0		
Shipped	1	USD	499.99		0		0		
Shipped	1	USD	499.99		0		0		
Shipped	1	USD	649.99		0		0		
Shipped	1	USD	649.99		0		0		
Shipped	1	USD	499.99		0		0		
Shipped	1	USD	499.99		0		0		
Shipped	1	USD	499.99		0		0		
Shipped	1	USD	649.99		0		0		
Shipped	1	USD	499.99		0		0		
Shipped	1	USD	499.99		0		0		
Shipped	1	USD	599.99		0		0		
Shipped	1	USD	499.99		0		0		
Shipped	1	USD	599.99		0		0		
Shipped	1	USD	649.99		0		0		
Shipped	1	USD	599.99		0		0		
	0								
	0								
Shipped	1	USD	649.99		0		0		
Shipped	1	USD	649.99		0		0		

Shipped	1	USD	499.99	0	0
	0	USD	499.99	0	0
Shipped	1	USD	599.99	0	0
	0				
Shipped	1	USD	499.99	0	0

ship-promotion-discount	ship-country	ship-promotion-id	promotion-ids	is-business-order	purchase-order-number
				FALSE	
				FALSE	
				FALSE	
				FALSE	
				FALSE	
				FALSE	
				FALSE	
				FALSE	
				FALSE	
				FALSE	
				FALSE	
				FALSE	
				FALSE	
				FALSE	
				FALSE	
				FALSE	
				FALSE	
				FALSE	
				FALSE	
				FALSE	
				FALSE	
				FALSE	
				FALSE	
				FALSE	
				FALSE	
				FALSE	
				FALSE	
				FALSE	
				FALSE	
				FALSE	
				FALSE	
				FALSE	

FALSE
FALSE
FALSE
FALSE
FALSE

price-designation	is-replacement-order
	FALSE
	FALSE
	FALSE
	FALSE
	FALSE
	FALSE
	FALSE
	FALSE
	FALSE
	FALSE
	FALSE
	FALSE
	FALSE
	FALSE
	FALSE
	FALSE
	FALSE
	FALSE
	FALSE
	FALSE
	FALSE
	FALSE
	FALSE
	FALSE
	FALSE
	FALSE
	FALSE
	FALSE
	FALSE
	FALSE
	FALSE
	FALSE

FALSE
FALSE
FALSE
FALSE
FALSE

EXHIBIT D

DuroMax
NEXT GENERATION POWER SYSTEMS

DUAL FUEL

DUAL FUEL HYBRID ELITE XP4400EH

Product Support (Product: information, application, service info & warranty questions)

Please email us at support@duromaxgenerators.com
or call 1-800-629-3325 (option 3) Monday -Thursday 6am to 6:30pm and Fridays 6am to 5pm. PST

This manual provides information regarding the operation and maintenance of these products.
We have made every effort to ensure the accuracy of the information in this manual.
We reserve the right to change this product at any time without prior notice.

FEATURES

- **Dual Fuel Option, LPG or Gasoline.**
- **Durable 7.0 HP, Air Cooled Overhead Valve Engine.**
- **Heavy Duty Steel Frame with Four Point Fully Isolated Motor Mounts for Smooth and Quiet Operation.**
- **Wheel and Handle Kit for Easy Transporting.**
- **Full Power Panel with Engine Shutoff Switch, Volt Meter, Circuit Breaker and Power Outlets.**
- **(2) Fully Protected 120V Outlets & (1) 120V/240V Twist-Lock Outlet.**
- **8 Hour Run Time.**
- **All Steel 4.0 Gal. Fuel Tank with EZ-Read Gauge.**
- **Low Oil Shut-Off Protects Engine.**
- **Super Quiet Muffler Reduces Engine Noise.**
- **Meets EPA and CARB Emission Standards.**

This manual provides information regarding the operation and maintenance of these products.
We have made every effort to ensure the accuracy of the information in this manual.
We reserve the right to change this product at any time without prior notice.

Notice Regarding Emissions

Engines that are certified to comply with California and U.S. EPA emission regulations for SORE (Small Off Road Equipment), are certified to operate on regular unleaded gasoline, and may include the following emission control systems: (EM) Engine Modifications and (TWC) Three-Way Catalyst (if so equipped).

GENERAL SAFETY PROCEDURES

Please familiarize yourself with the following safety symbols and words:
The safety alert symbol ⚠ is used with one of the safety words (**DANGER, CAUTION,** or **WARNING**) to alert you to hazards. Please pay attention to these hazard notices both in this manual and on the generator.

DANGER: Indicates a hazard that will result in serious injury or death if instructions are not followed.

WARNING: Indicates a strong possibility of causing serious injury or death if instructions are not followed.

CAUTION: Indicates a possibility of personal injury or equipment damage if instructions are not followed.

⚠DANGER: This generator produces poisonous carbon monoxide gas when running. This gas is both odorless and colorless. Even if you do not see or smell gas, carbon monoxide may still be present. Breathing this poison can lead to headaches, dizziness, drowsiness, and eventually death.

- Use outdoors **ONLY** in non-confined areas.
- Keep several feet of clearance on all sides to allow proper ventilation of the generator.

⚠ **WARNING: The exhaust from this product contains chemicals known to the State of California to cause cancer, birth defects, or other reproductive harm.**

⚠ **WARNING: This generator may emit highly flammable and explosive gasoline vapors, which can cause severe burns or even death. A nearby open flame can lead to explosion even if not directly in contact with gas.**

- Do not operate near open flame.
- Do not smoke near generator.
- Always operate on a firm, level surface.
- Always turn generator off before refueling. Allow generator to cool for at least 2 minutes before removing fuel cap. Loosen cap slowly to relieve pressure in tank.
- Do not overfill gas tank. Gas may expand during operation. Do not fill to the top of the tank.
- Always check for spilled gas before operating.
- Empty the gasoline tank before storing or transporting the generator.
- Before transporting, turn fuel valve to off and disconnect the spark plug.

⚠ WARNING: This generator produces powerful voltage, which can result in electrocution.

- ALWAYS ground the generator before using it (see the "*Grounding the Generator*" portion of the "*PREPARING THE GENERATOR FOR USE*" section).
- Generator should only be plugged into electrical devices, either directly or with an extension cord. NEVER connect to a building electrical system without a qualified electrician. Such connections must comply with local electrical laws and codes. Failure to comply can create a backflow of power, which may result in serious injury or death to utility workers.
- Use a ground fault circuit interrupter (GFCI) in highly conductive areas such as metal decking or steel work. GFCIs are available in-line with some extension cords.
- Do not use uncovered in rainy or wet conditions.
- Do not touch bare wires or receptacles (outlets).
- Do not allow children or non-qualified persons to operate.

⚠ WARNING: This generator produces heat when running. Temperatures near exhaust can exceed 150°F (65°C).

- Do not touch hot surfaces. Pay attention to warning labels on the generator denoting hot parts of the machine.
- Allow generator to cool several minutes after use before touching engine or areas which heat during use.

CAUTION: Misuse of this generator can damage it or shorten its life.

- Use the generator only for its intended purposes.
- Operate only on dry, level surfaces.
- Allow generator to run for 3 - 5 minutes before connecting any electrical devices.
- Shut off and disconnect any malfunctioning devices from generator.
- Do not exceed the Wattage capacity of the generator by plugging in more electrical devices than the unit can handle (see "*PRECAUTIONS-OVERLOADING THE GENERATOR*").
- Do not turn on electrical devices until after they are connected to the generator.
- Turn off all connected electrical devices, and turn off the breaker, before stopping the generator.

In addition to the above safety notices, please familiarize yourself with the safety and hazard markings on the generator.

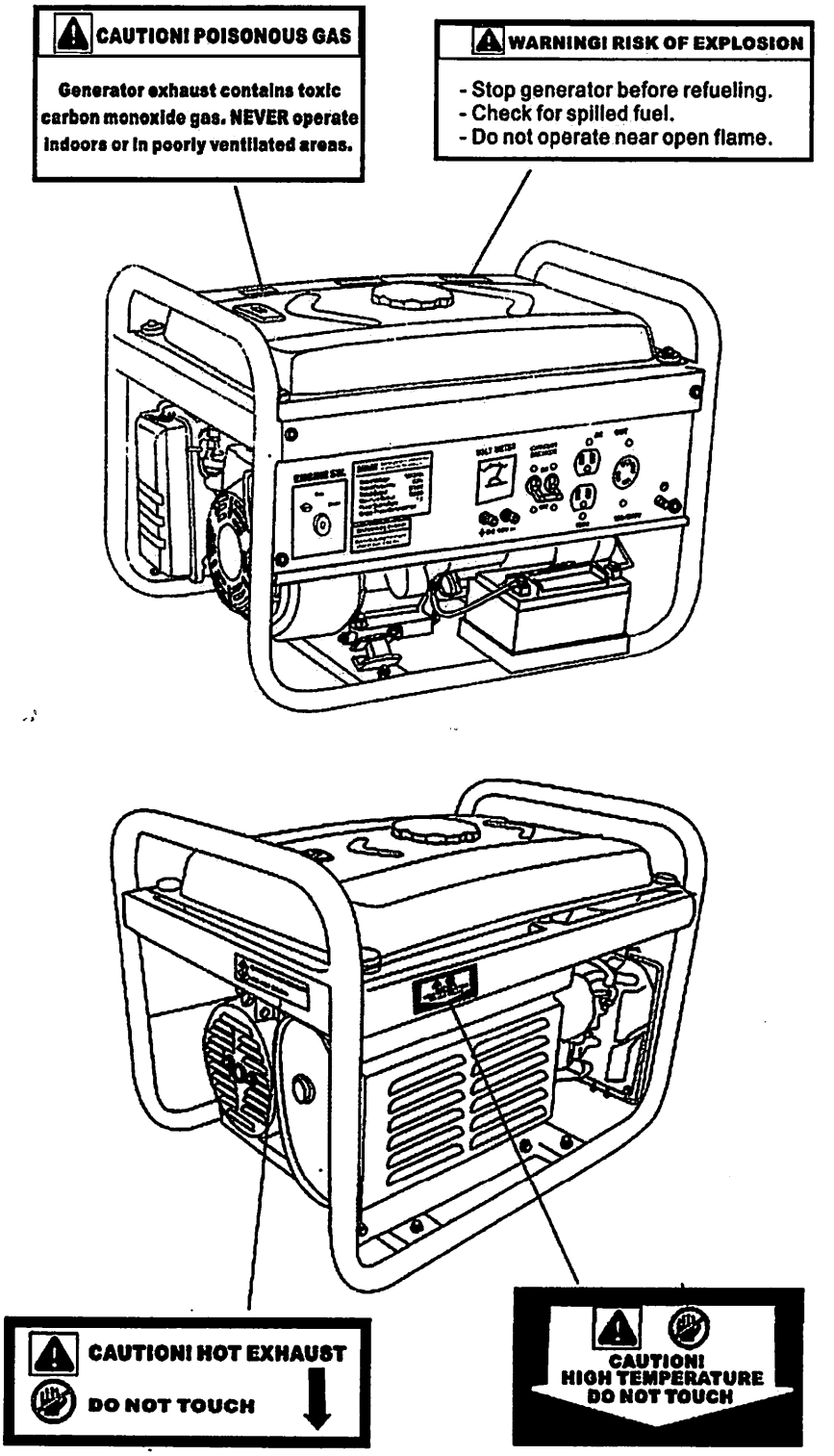

PACKAGE CONTENTS

Your generator comes with the items listed below. Please check to see that all of the following items are included with your generator.

Screw driver

Spanner

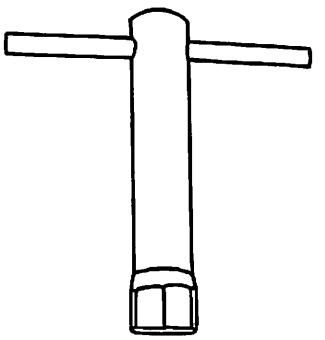

Spark plug wrench

GENERATOR COMPONENTS

Please familiarize yourself with the locations and functions of the various components and controls of your generator.

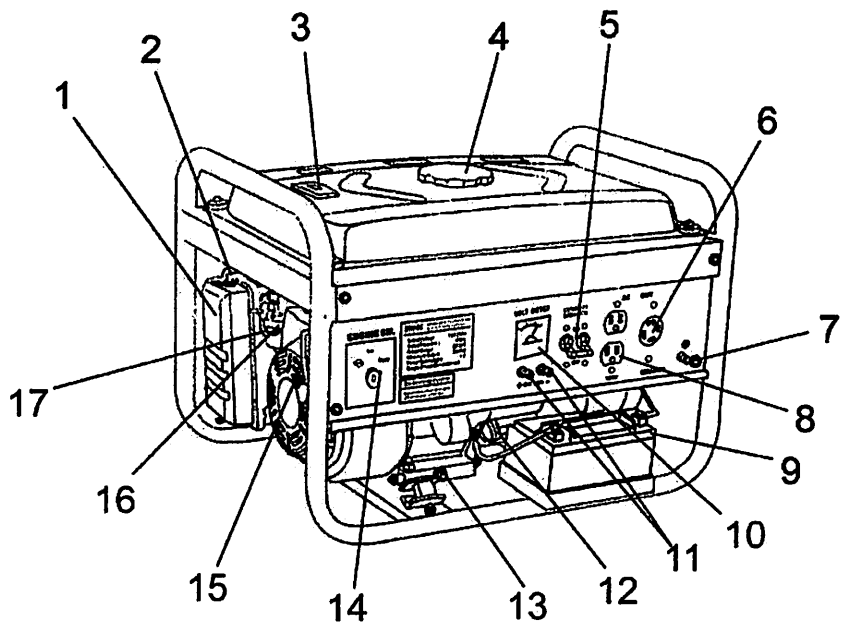

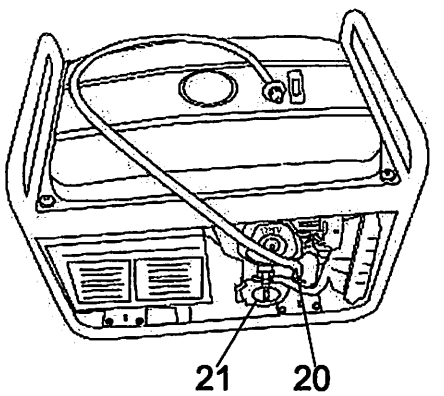

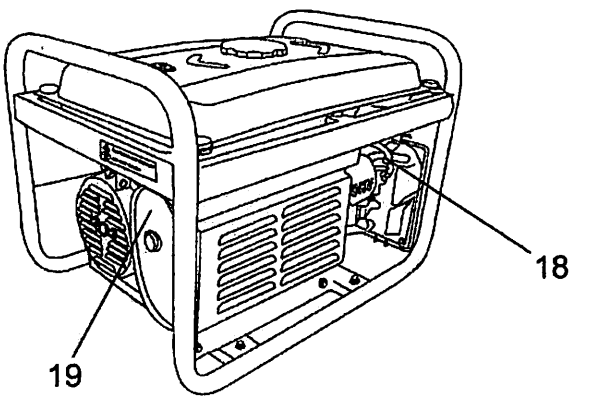

1. **Air cleaner** - a removable, cleanable, sponge-like element that limits the amount of dirt pulled into the engine.
2. **Choke lever** - Adjusts the amount of air let into the engine.
3. **Fuel Gauge** - Indicates the amount of fuel in the tank.
4. **Fuel Cap** - Access to the fuel tank for adding fuel.
5. **Circuit Breaker** - Reset switch that protects the generator from electrical overload.
6. **120/ 240 Volt AC Receptacle** - Use to connect electrical devices that run 120 and/or 240 Volt, 60Hz, single phase, AC current (NEMA L14-30).
7. **Ground Terminal** - Connect grounding wires here to properly ground unit.
8. **120 Volt AC Receptacle** - Use to connect electrical devices that run 120 Volt, 60 Hz, single phase, AC current (2×duplex GFCI).
9. **12V DC Battery.**
10. **Volt Meter** - Provides reading of voltage output.
11. **12v DC Receptacle**- Use for charging 12 Volt automotive-type batteries only.

12. **Oil Filler Cap-** Use to Add oil or checking the oil.
13. **Oil Fill and Dipstick-** Location for checking and filling engine oil.
14. **Engine Switch-** Used to start/stop engine.
15. **Recoil Starter-** Pull-cord for starting engine.
16. **Fuel Filter Cup-** Traps dirt and water from fuel before it enters the engine.
17. **Fuel valve-** Allows fuel to enter engine.
18. **Spark plug-** Provides proper engine ignition.
19. **Muffler-** Reduces engine noise.
20. **Hose connector-** Connect liquid propane gas to generator.
21. **Pressure Release Valve-** Provides regulated liquid propane gas supply.

PREPARING THE GENERATOR FOR USE

Using the Generator for the First Time
If you are using the generator for the first time, there are a few steps you must take to prepare it for operation.

Step 1 - Add oil

The generator requires engine oil to operate properly. The generator, when new from the package, contains no oil in the crankcase. You must add the proper amount of oil before operating the generator for the first time. This amount, which is equal to the oil capacity of the engine crankcase, can be found on the chart in *figure 1*. When filling the engine with oil in the future, please refer to this chart.

Model number	**XP4400H**	**XP4400EH**
Engine oil capacity	20 fluid oz.	

Figure 1- Generator Oil Capacity

CAUTION:
- **Do not apply engine oil with additives or 2-stroke gasoline engine oil,** as they haven't enough lubrication, which may shorten the engine's service life.
- **Engine oil recommended: SAE 10W-30.** As viscosity varies with regions and temperatures, so the lubricant has to be selected in accordance with our recommendation.

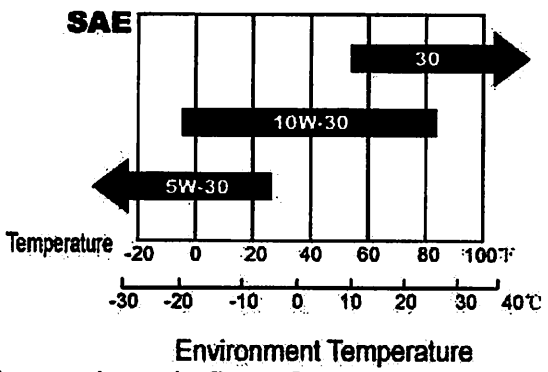

To add oil, follow these steps:
1. Make sure the generator is on a level surface.
2. Unscrew the oil filler/dipstick cap from the engine as shown in *figure 2*.
3. Using a funnel, add the appropriate amount of oil, as found in *figure 1*, into the crankcase. You will know the crankcase is full when the oil level has reached the lower lip of the opening you have just poured the oil into (see *figure 3*).
4. Replace oil filler cap.

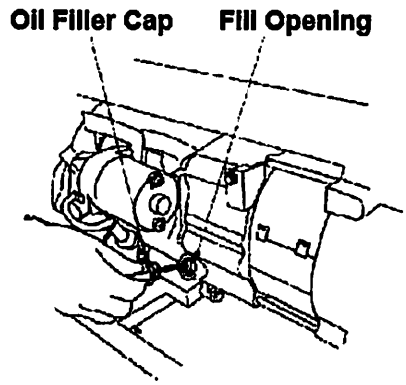

Figure 2- Unscrewing the oil cap

Figure 3 - Adding oil

Step 2 - Add Gasoline

⚠ **WARNING: Gasoline and gas fumes are highly flammable.**

- **Do not fill tank near an open flame.**
- **Do not overfill. Always check for fuel spills.**

To ensure that the generator runs smoothly use only FRESH, UNLEADED GAS WITH AN OCTANE RATING OF 87 OR HIGHER.

To add gasoline:

1. Make sure the generator is on a level surface.
2. Unscrew gas cap and set aside (NOTE: the gas cap may be tight and hard to unscrew).
3. Slowly add unleaded gasoline to the fuel tank. Be careful not to overfill. Please refer to the chart in *figure 4* to find the gas capacity of your generator model. The fuel gauge on the top of the gas tank indicates how much gasoline is in the generator gas tank. **NOTE: Gas can expand. Do not fill the gas tank to the very top.**
4. Replace fuel cap and wipe up any spilled gasoline with a dry cloth.

IMPORTANT:

- Never use an oil/gasoline mixture.
- Never use old gas.
- Avoid getting dirt or water in the fuel tank.
- Gas can age in the tank and make it hard to start up the generator in the future.
- Never store generator for extended periods of time with fuel in the tank.

Model number	**XP4400H**	**XP4400EH**
Gas tank capacity	15L (3.96 US Gallons)	

Figure 4 - Gas Tank Capacity

Step 3 - Ground the Generator

⚠ **WARNING: Failure to properly ground the generator can result in electrocution.**

Ground the generator by tightening the grounding nut against a grounding wire (see *figure 5*). A generally acceptable grounding wire is a No. 12 AWG (American Wire Gauge) stranded copper wire. This grounding wire should be connected at the other end to a copper or brass-grounding rod

that is driven into the earth. Grounding codes can vary by location. Please contact a local electrician to check the grounding regulations for your area.

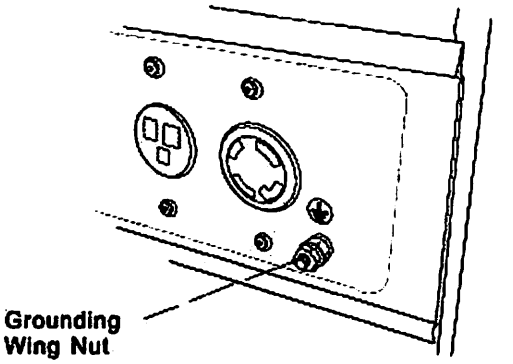

Figure 5 – Attaching the Grounding Wire to the Generator

Subsequent Use of the Generator

If this is not your first time using the generator there are still steps you should take to prepare it for operation.

IMPORTANT: At this point you should be familiar with the procedures described in the first portion of this section entitled "*Using the Generator for the First Time.*" If you have not yet read this section, go back and read it now.

Step 1- Check the oil

The generator is equipped with an automatic shutoff to protect it from damage due to low oil. Nonetheless, you should check the oil level of the engine before each use to ensure that the engine crankcase has a sufficient amount.

To check the oil level:

1. Make sure the generator is on a level surface.
2. Unscrew the oil filler/dipstick cap.
3. With a dry cloth, wipe the oil off of the stick on the inside of the cap.
4. Insert the dipstick as if you were replacing the cap and then remove again. There should now be oil on the stick. If there is no oil on the stick, or oil only at the very end of the stick, you should add oil until the engine crankcase is filled (see "*Adding Oil*" portion of the "*Maintenance*" section).
5. Be sure to replace the cap when finished checking oil.

NOTE: The oil capacity for your generator can be found in the "*Specifications*" section of this manual.

Step 2 - Check the Gas Level

Before starting the generator, check to see that there is sufficient gasoline in the gas tank. The fuel gauge on top of the generator will indicate the gas level in the tank. Add gas if necessary according to the steps in the "Adding Gasoline" portion of the "Maintenance" section.

⚠ WARNING: Gasoline and gasoline fumes arc highly flammable.

- Do not fill tank near an open flame.
- Always allow engine to cool for several minutes before refueling.
- Do not overfill (check the "Specifications" section for the tank capacity of your generator). Always check for fuel spills.

⚠ IMPORTANT:

- Use only UNLEADED gasoline with an octane rating of 87 or higher.
- Do not use old gas.
- Never use an oil/gasoline mixture.
- Avoid getting dirt or water in the fuel tank.
- Never store generator for extended periods of time with fuel in the tank.

Step 3- Ground the Generator

⚠ **WARNING: Failure to properly ground the generator can result in electrocution.** Ground the generator by tightening the grounding nut against a grounding wire (see figure 5). A generally acceptable grounding wire is a No. 12 AWG (American Wire Gauge) stranded copper wire. This grounding wire should be connected at the other end to a copper or brass-grounding rod that is driven into the earth.

Grounding codes can vary by location. Please contact a local electrician to check the grounding regulations for your area.

STARTING THE GENERATOR - Gasoline or LPG separately

⚠ CAUTION:

When using gasoline, LPG must be shut off! When using LPG, gasoline must be shut off!

⚠ **Disconnect all electrical loads from the generator before attempting to start!**

To start your generator with gasoline, perform the following steps:

1. Make sure no electrical devices are connected to the generator. Such devices can make it difficult for the engine to start.
2. Check that the generator is properly grounded (see page 13, "*Ground the Generator*").
3 Turn the gasoline fuel valve to the "ON" position
4. Move the choke lever to the "CLOSED" position (see *figure 7*).
5. Set the engine switch to the "ON" position.
6. Pull on the recoil starter handle slowly until a slight resistance is felt (see *figure 8*). Then pull quickly to start the engine. Return cord gently into the machine. Never allow the cord to snap back.
7. If engine fails to start, repeat step 4. NOTE: After repeated attempts to start the engine, please consult the troubleshooting guide before attempting again.
8. Once the engine has started and run for about a minute, move the choke lever about half way towards the "OPEN" position. Wait another 30 seconds and then move the choke lever all the way to the "OPEN" position.
9. Allow the generator to run for several minutes before attempting to connect any electrical devices.

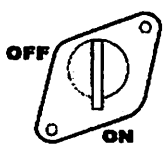

Figure 6 - fuel valve in the "on" position

Figure 7 - Choke in the close position

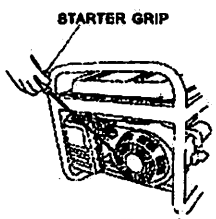

Figure 8 - Pulling the recoil start.

To start your generator with LPG, perform the following steps:

1. Make sure no electrical devices are connected to the generator.
2. Check that the generator is properly grounded (see page 13, "*Ground the Generator*").
3. Turn the gasoline fuel valve to the "OFF" position (see *figure 6*).
4. Connect the propane gas hose to the regulator (see figure B).
5. Connect the regulator to the liquid propane gas supply and then turn on the liquid propane gas supply, making sure there are no leaks (see figure C).
6. Open the clasp connected to the Pressure Release Valve (see figure C).
7. Press the button on Pressure Release Valve two to three times before starting the engine. (see figure D)
8. When starting the engine:
   a. If the engine is warm (The unit was run recently) start with the choke half open.
      i. Wait another 30 seconds and then move the choke lever all the way to the "OPEN" position.
   b. If the engine is cold (The unit has not been run for half an hour or more) start with the choke open. (see figure E & F).
9. Pull on the recoil starter handle slowly until a slight resistance is felt (see *figure 8*). Then pull quickly to start the engine. Return cord gently into the machine. Never allow the cord to snap back.
10. Allow the generator to run for several minutes before attempting to connect any electrical devices.

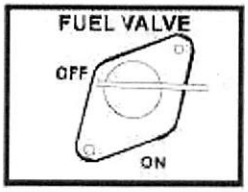

Figure A - Fuel Valve in the "OFF" position

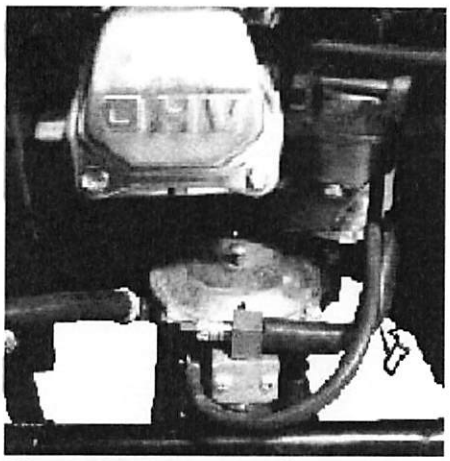

Figure B - Connect the Hose

To LPG Supply

Figure C-Connect Valve

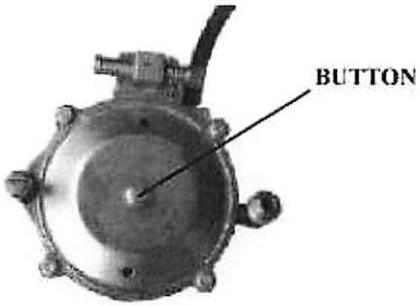

Figure D -Button on Presssure Release Valve

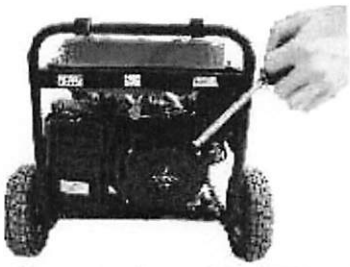

Figure F - Start with LPG(Liquid Propane Gas)

⚠ WARNING: WHEN USING THE GENERATOR WITH LPG

MAKE SURE THERE IS NO POSSIBLE IGNITION SOURCE CLOSE TO THE GENERATOR.

1. Before using, make sure all of the connectors and hoses are well connected and sealed.
2. Connect electrical devices to generator ONLY after the engine runs smoothly. (There may be remnant gasoline in the carburetor; this can cause unsteady engine performance for several minutes)
3. If the propane gas leaks, shut off the LPG supply first and then quickly unplug or turn off any electrical devices powered by the unit.
4. When stopping the engine, unplug or turn off any electrical devices and then turn off the LPG CLASP (see figure C). After the engine has stopped, turn the KEY to 'OFF" position, then shut off the LPG supply.

USING THE GENERATOR

Once you have allowed the engine to run for several minutes, you may connect electrical devices to the generator.

AC Usage

You may connect electrical devices running on AC current according to their wattage requirements. The chart in figure 9 shows the rated and surge wattage of your generator according to its model number.

The *rated wattage* corresponds to the maximum wattage the generator can output on a continuous basis.

The *surge wattage* corresponds to the maximum amount of power the generator can output for a short period of time. Many electrical devices such as refrigerators require short bursts of extra power, in addition the rated wattage listed by the device, to stop and start their motors. The surge wattage ability of the generator covers this extra power requirement.

Model Number	Rated (Running) Wattage	Surge Wattage
XP4400	3500	4400
XP4400E	3500	4400

Figure 9-generator wattage by model number

The total running wattage requirement of the electrical devices connected to the generator should not exceed the rated wattage of the generator itself. To calculate the total wattage requirement of the electrical devices you wish to connect, find the rated (or running) wattage of each device. This number should be listed somewhere on the device or in its instruction manual.

If you cannot find this wattage, you may calculate it by multiplying the Voltage requirement by the Amperage drawn: Watts = Volts × Amperes. If these specifications are not available you may estimate the Watts required by your device by using the chart in *figure 10*.

Tool or Appliance	Rated (Running) Watts	Additional Surge Watts
Electric water heater (40 gal)	4000	0
Hot plate	2500	0
Saw-radial arm	2000	2000
Electric stove	1500	0
Saw-circular	1500	1500
Air compressor (1HP)	1500	3000
Window air conditioner	1200	1800
Saw-miter	1200	1800
Microwave	1000	2000
Well water pump	1000	1500
Reciprocating saw	960	1040
Sump pump	800	1200
Refrigerator freezer	800	1200
Furnace blower	800	1300
Computer	800	0
Electric drill	600	900
Television	500	0
Deep freezer	500	800
Garage door opener	480	600
Stereo	400	0
Box fan	300	600
Clock radio	300	0
Security system	180	0
DVD player/VCD	100	0
Common light bulb	75	0

Figure 10- Estimated wattage requirements of common electrical devices.

Once you have found the rated wattage requirement of each electrical device, add these numbers to find the total rated wattage you wish to draw from the generator. If this number exceeds the rated wattage of the generator, **DO NOT** connect all these devices. Select a combination of electrical devices, which has a total rated wattage lower than or equal to the rated wattage of the generator.

CAUTION - The generator can only run at its surge wattage capacity for a short time. Connect only electrical devices requiring a rated (running) wattage equal to or less than the rated wattage of the generator. Never connect devices requiring a rated wattage equal to the surge wattage of the generator.

NOTE: The above wattage figures are estimates only. Try to check the wattage listed on your electrical devices before consulting this chart.

Once you have determined what electrical devices you will be powering with the generator, connect these devices according to the following procedure:

1. Plug in each electrical device with the device turned off.
    a. NOTE: Be sure to attach appliances to the correct receptacle (outlet). Connect standard 120 Volt, single phase, 60 Hz loads only to the 120 Volt receptacles.
    b. Connect 120/240 Volt, single phase, 60Hz loads with NEMA L14-30 plug **only** to the 120/240 Volt receptacle See *Figure 11* for a depiction of each of these receptacles.
2. Switch the circuit breaker to the "ON" position.
3. Turn on the connected electrical devices in the order of the amount of power they require beginning with the device with the highest rated Wattage requirement.

⚠ **CAUTION: Do not connect 50Hz or 3-phase loads to the generator.**

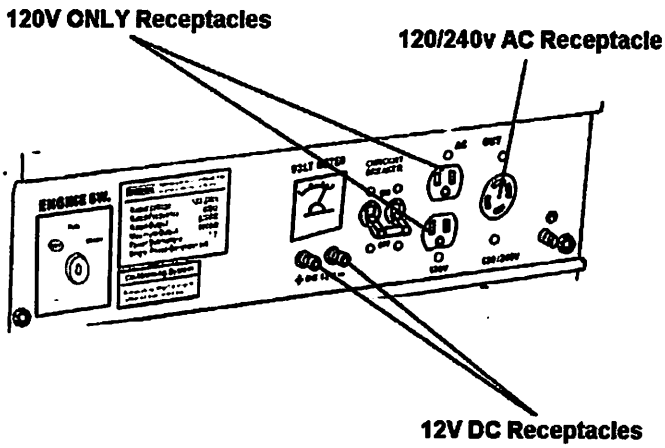

Figure 11- Receptacles available on the generator

VOLTAGE SELECTOR SWITCH

The voltage selector switches the dual 120v AC windings of the generator to produce "120V ONLY" or "120/240V". If a 240V appliance is connected to the 4-prong receptacle, the switch must be in the "120/240V" position. If only 120V appliances are being connected to the generator select the "120V ONLY" position to double the 120v amperage.

WARNING:

Only change the Voltage Selector Switch with the main AC circuit breaker OFF. The generator can be seriously damaged if the Voltage Selector Switch is changed with the breaker ON.

SOME NOTES ABOUT POWER CORDS

Long or thin cords can drain the power provided to an electrical device by the generator. When using such cords, allow for a slightly higher rated wattage requirement for the electrical device. See *Figure 12* for recommended cords based on the power requirement of the electrical device.

Device Requirements			Max. Cord Length (ft.) by Wire Gauge				
Amps	Watts (120V)	Watts (240V)	#8 wire	#10 wire	#12 wire	#14 wire	#16 wire
2.5	300	600	NR	1000	600	375	250
5	600	1200	NR	500	300	200	125
7.5	900	1800	NR	350	200	125	100
10	1200	2400	NR	250	150	100	50
15	1800	3600	NR	150	100	65	NR
20	2400	4800	175	125	75	50	NR
25	3000	6000	150	100	60	NR	NR
30	3600	7200	125	65	NR	NR	NR
40	4800	9600	90	NR	NR	NR	NR

*NR= not recommended

Figure 12 - Maximum Extension Cord Lengths by Power Requirement

DC Usage

⚠ **CAUTION: The DC receptacle is for recharging 12 Volt automotive-type batteries only. Do not connect any other device to this receptacle.**

⚠ **CAUTION: Never try to jump start a car with your generator.**

To connect 12 Volt batteries to the DC receptacle:

1. Connect one charging wire to the positive terminal on the battery and the other charging wire to the negative terminal on the battery.
2. Connect the free end of the positive wire to the positive receptacle (outlet) on the generator.
3. Start the generator.
4. Carefully connect the free end of the negative wire to the negative receptacle on the generator.
5. When disconnecting, always disconnect the wires from the generator first to avoid a spark.

⚠ **DANGER: Storage batteries emit highly explosive hydrogen gas when charged. Batteries also contain acid, which can cause severe chemical burns.**

- ⚠ **Do not allow open flames or cigarettes nearby for several minutes after charging a battery.**
- ⚠ **Always wear protective goggles and rubber gloves when charging a battery.**
- ⚠ **If battery acid gets on your skin, flush with water.**
- ⚠ **If battery acid gets in your eyes, flush with water and call a physician immediately.**
- ⚠ **If battery acid is swallowed, drink large quantities of milk and call a Physician immediately.**

If your generator is the electric start model, once running, it will charge the battery on the generator automatically. While charging, you can see the recharge indicator light lit, after the battery is full, the light will turn off.

STOPPING THE GENERATOR

To stop the generator:

1. Power down, and then unplug all connected electrical devices.
2. Switch the main AC circuit breaker to the "OFF" position.
3. Allow the generator to run for several more minutes with no electrical devices connected. (This helps stabilize the temperature of the generator.)
4. Turn the engine switch to the "OFF" position.
5. Turn the fuel valve to the "OFF" position.

⚠ **WARNING:** Allow the generator to cool for several minutes before touching areas that become hot during use.

⚠ **CAUTION:** Allowing gas to sit in the generator tank for long periods of time without use can make it difficult to start the generator in the future. Never store generator for extended periods of time with fuel in the tank.

MAINTENANCE /CARE

Proper routine maintenance of your generator will help prolong the life of your machine. Please perform maintenance checks and operations according the schedule in *figure 13*.

⚠ **CAUTION:** Never perform maintenance operations while the generator is running.

Recommended Maintenance schedule

		Each use	Every month or	Every 3 months or	Every 6 months or	Every year or
Engine oil	Check level	×				
	Replace		×			
Air cleaner	Check	×				
	Clean			×		
Fuel filter cup	Clean				×	
Spark plug	Check/clean				×	
Gas tank	Check gas level	×				
	Clean		×			×

Figure 13 - Recommended maintenance schedule

Cleaning the Generator

Always try to use your generator in a cool dry place. However, in the event your generator becomes dirty you may clean the exterior with one or more of the following:

- A damp cloth
- A soft brush

- A vacuum
- Pressurized air

⚠ **Never** clean your generator with a bucket of water or a hose. Water can get inside the working parts of the generator and cause a short circuit or corrosion.

Checking the Oil

The generator is equipped with an automatic shutoff to protect it from running on low oil. Nonetheless, you should check the oil level of the generator before each use to ensure that the generator crankcase has a sufficient amount.

To check the oil level:

1. Make sure the generator is on a level surface.
2. Unscrew the oil filler/dipstick cap (see *figure 14*).
3. With a dry cloth, wipe the oil off of the stick on the inside of the cap.
4. Insert the dipstick as if you were replacing the cap and then remove again. There should now be oil on the stick. If there is no oil on the stick, or oil only at the very end of the stick, you should add oil until the engine crankcase is filled. See "*Changing/ Adding Oil*" in this section.
5. Be sure to replace cap when you are finished checking the oil.

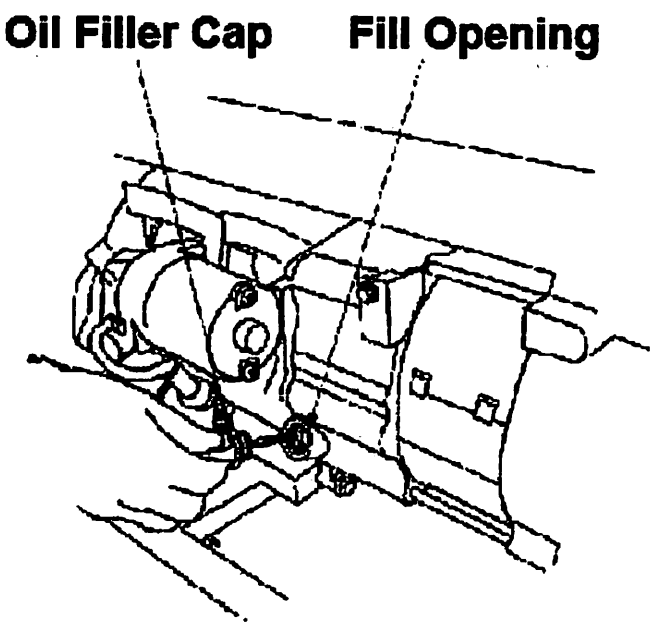

You should check the oil level of your generator according to the maintenance schedule in *figure 13*. When the oil level is low you will need to add oil until the level is sufficient to run the generator. The oil capacity of your generator engine is listed in *figure 15*.

Model number	**XP4400**	**XP4400E**
Engine oil capacity	20 fluid oz.	20 fluid oz.

Figure 15- Engine Oil Capacity.

It is only necessary to drain the oil from the crankcase, other than for regular oil changes if it has become contaminated with water or dirt. In this case, you can drain the oil from the generator according to the following steps:

1. Place an approved oil disposal container underneath the generator to catch oil as it drains.
2. Using a 10 mm hex wrench, unscrew the oil drain plug, which is located on the crankcase underneath the oil filler/dipstick cap (see *figure 16*). Allow all the oil to drain from the generator.
3. Replace the oil drain plug and tighten with a 10 mm hex wrench.

To add oil to the crankcase, follow these steps:

1. Make sure the generator is on a level surface.
2. Unscrew the oil filler/dipstick cap from the engine as shown in *figure 14* above.
3. Using a funnel, add motor oil to the crankcase. We recommend SAE 10W30 motor oil for general use. When full, the oil level should come close in the top of the oil fill opening (*see figure 17*).

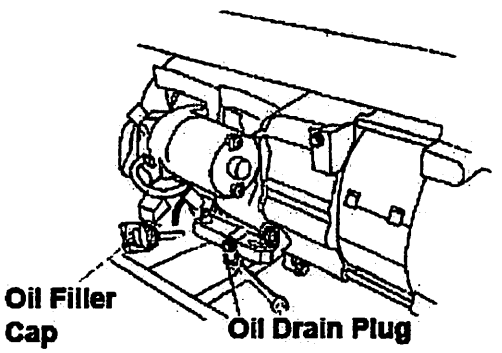

Figure 16: Draining Oil

Figure 17: Adding Oil

NOTE: Never dispose of used motor oil in the trash or down a drain. Please call your local recycling center or auto garage to arrange oil disposal.

Air Cleaner Maintenance

Routine maintenance of the air cleaner helps maintain proper airflow to the carburetor. Occasionally check that the air cleaner is free of excessive dirt.

1. Unhinge the clasps at the top and bottom of the air cleaner cover (see *figure 18*).
2. Remove the sponge-like elements from the casing.
3. Wipe the dirt from inside the empty air cleaner casing.
4. Wash the sponge-like elements in household dish detergent and warm water.
5. Allow the elements to dry completely.
6. Soak the dry elements in a small amount of engine oil. Ring out any excess oil.
7. Replace the sponge-like elements in the air cleaner casing and replace the cover.

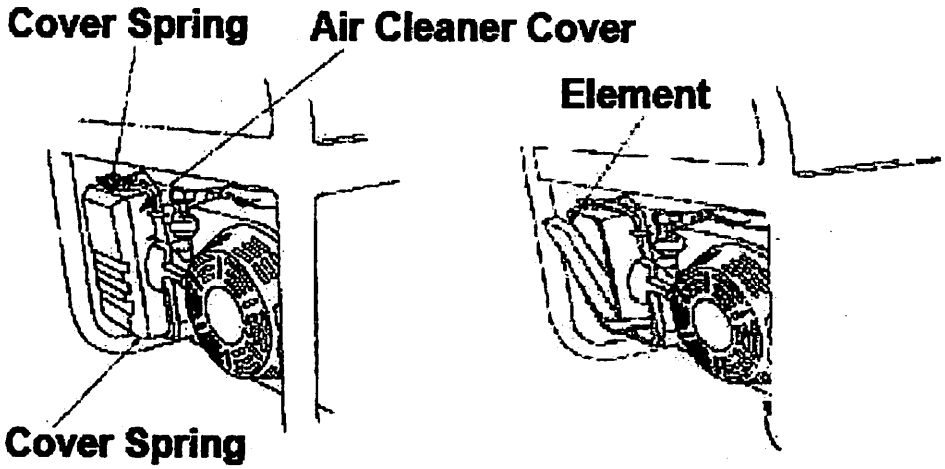

Figure 18 – Removing the air cleaner casing.

Fuel Filter Cup Cleaning

The fuel filter cup is a small well underneath the fuel valve. It helps to trap dirt and water that may be in your fuel tank before it can enter the engine.

To clean the fuel filter cup:

1. Turn the fuel valve to the "OFF" position.
2. Unscrew the fuel filter cup from the fuel valve using a wrench. Turn the valve toward you to unscrew (*see figure 19*).
3. Clean the cup of all sediment using a rag or brush.
4. Reinstall the fuel filter cup.

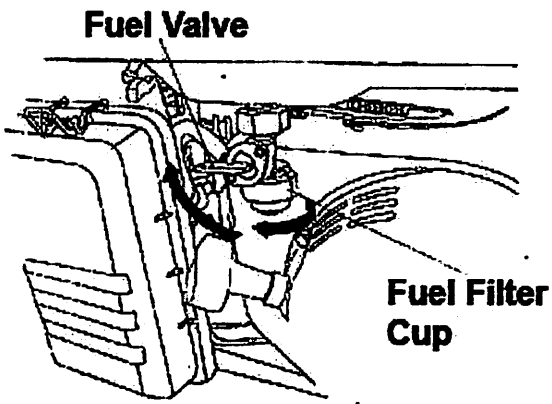

Figure 19 –Removing the Fuel Filter Cup

Spark Plug Maintenance

The spark plug is important for proper engine operation. A good spark plug should be intact, free of deposits, and properly gapped.

To inspect you spark plug:

1. Pull on the spark plug cap to remove it.
2. Unscrew the spark plug from the generator using the spark plug wrench included with this product (see *figure 20*).
3. Visually inspect the spark plug. If it is cracked or chipped, discard and replace with a new spark plug. We recommend using a F6RTC spark plug such as NGK BPR5ES.
4. Measure the plug gap with a gauge (see *figure 21*). The gap should be 0.7-0.8 mm (0.028-0.031 in).
5. If you are re-using the spark plug, use a wire brush to clean any dirt from around the spark plug base and then re-gap the spark plug.

6. Screw the spark plug back into its place on the generator using the spark plug wrench.
7. Replace the spark plug cap.

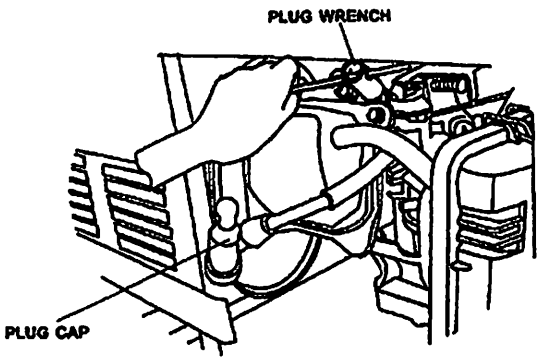

Figure 20- Removing the spark plug

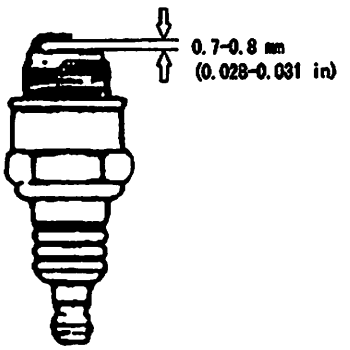

Figure 21- Measuring the spark plug gap

Emptying the Gas Tank

Before storing your generator for extended periods of time, you should drain your generator of gasoline.

To drain the generator of gas:

1. Turn the fuel valve to the "OFF" position.
2. Remove the fuel filter cup (see "*Removing the Fuel Filter Cup*" earlier in this section.
3. Empty the fuel filter cup of any fuel.
4. With a receptacle underneath the generator to catch the gas, turn the fuel valve to the "ON" position. Drain all the gas from the generator.
5. Turn the fuel valve to the "OFF" position.
6. Replace the fuel filter cup.
7. Store the emptied gasoline in a suitable place.

⚠CAUTION: Do not store fuel from one season to another.

STORAGE/TRANSPORT PROCEDURES

⚠ Caution: Never place any type of storage cover on the generator while it is still hot.

When transporting or storing your generator for extended periods of time:

- Empty the gas tank (see "*Emptying the Gas Tank*" in the "*Maintenance*" section).
- Disconnect the spark plug.
- Do not obstruct any ventilation openings.
- Keep the generator in a cool dry area.

GENERATOR SPECIFICATIONS

AC Output

	XP4400H	XP4400EH
Rated Wattage	3500W	3500W
Surge Wattage	4400W	4400W
Rated Voltage	120/240V	120/240V
Rated Frequency	60Hz	60Hz
Phase	Single	Single

DC Output

	XP4400H	XP4400EH
Voltage	12V	12V
Amperage	8.3A	8.3A
Dimensions (in):	Length=23.2 Width=17 Height=17	Length=23.2 Width=17 Height=17

Engine

	XP4400H	XP4400EH
Engine type	4-stroke OHV single cylinder with forced air cooling system	
Ignition system	Non-contact transistor	
Displacement	200cc	
Starting type	Recoil	Electric
Fuel tank capacity:	15L(3.96US gal.)	
Oil capacity	0.6L(20fl oz.)	
Run time on 50% load	14hrs	12 hrs
Noise Level	< 69dB	

TROUBLESHOOTING

Problem	Cause	Solution
Engine will not start	Engine switch is set to "OFF".	Set engine switch to "ON".
	Fuel valve is turned to "CLOSED".	Turn fuel valve to "OPEN" position.
	Choke is open.	Close the choke
	Engine is out of gas.	Add gas.
	Engine is filled with contaminated or old gas	Change the gas on the engine.
Engine will	Spark plug is dirty.	Clean spark plug.
not start (continued from page 19)	Spark plug is broken.	Replace spark plug.
	Generator is not on level surface.	Move generator to a level surface to prevent low oil shutdown from triggering.
	Oil is low	Add or replace oil.
Engine runs but there is no electrical output	Circuit breaker is off.	Set the circuit breaker to the "ON" position.
	Bad connecting wires/cables.	If you are using an extension cord, try a different one.
	Bad electrical device connected to generator.	Try connecting a different device.
Generator runs but does not support all electrical devices connected.	Generator is overloaded	Try connecting fewer electrical loads to the generator.
	Shorten one of the connected devices.	Try disconnecting any faulty or short-circuited electrical loads.
	Air cleaner is dirty.	Clean or replace air cleaner.

GENERATOR ASSEMBLY AND MOUNTING

Generator is supplied with a wheel kit. If you want to install the wheel kit on your unit, please follow the instructions below. If you will not be using the wheel kit, skip this section.

1. Place the bottom of the generator cradle on a flat, even surface. Temporarily place unit on blocks to ease assembly.
2. Secure the support leg to the cradle with cap screws (M8 x 16) and lock nuts (M8) (see *figure 22*).
3. Secure the axle to the cradle with cap screws (M8 x 16) and lock nuts (M8) (see *figure 23*).
4. Slide a wheel over the axle, then secure the wheel with a retaining pin. (see *figure 24,Figure 25, Figure 26*).
5. Position the handles on the cradle and attach, cap screws (M8 x 16) and lock nuts (M8) (*Figure 27,Figure 28*).
6. Check that all fasteners are tight.

Figure 22

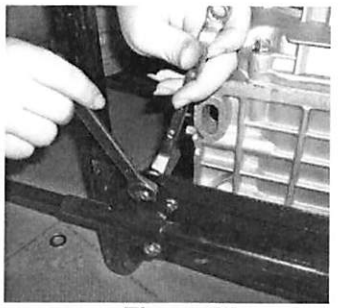

Figure 23

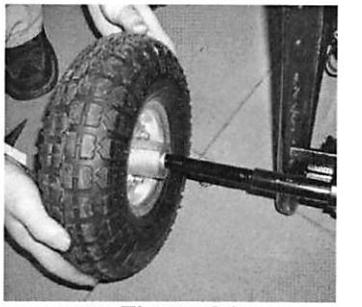

Figure 24

Figure 25

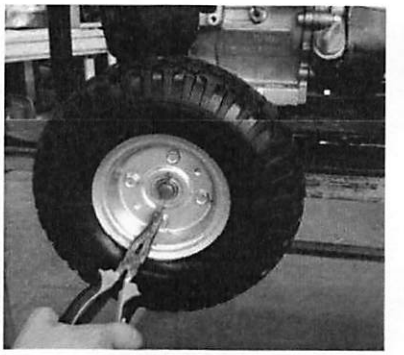

Figure 26

Figure 27

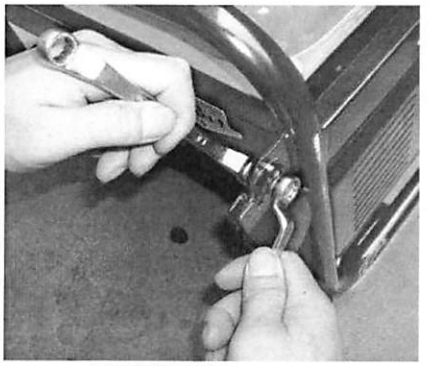

Figure 28

CHANGE THE CARBON-BRUSH

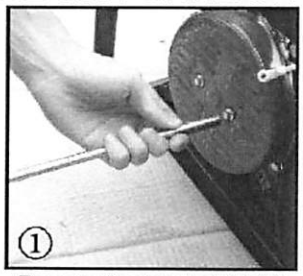

Remove the 2 bolts (M5x12) on the generator back-cover

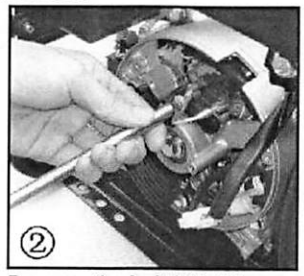

Remove the bolt (M5x16) holding the carbon brush.

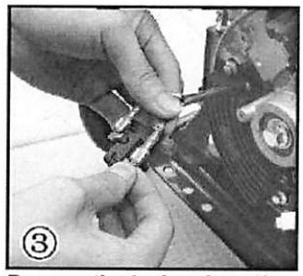

Remove the 2 wires from the AVR on the carbon brush.

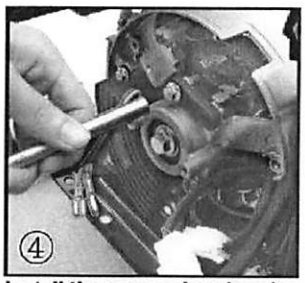

Install the new carbon brush with bolt (M5x16)

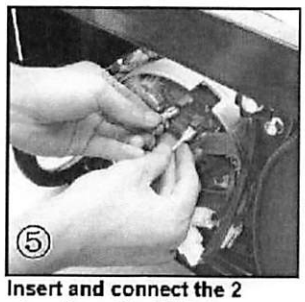

Insert and connect the 2 wires from the AVR, be sure to connect + and - correctly.

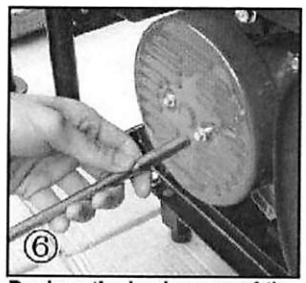

Replace the back cover of the generator and secure with the 2 bolts (M5x12)

CHANGE THE AVR

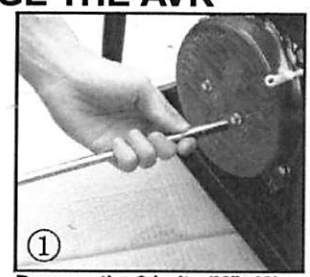

Remove the 2 bolts (M5x12) on the generator back cover.

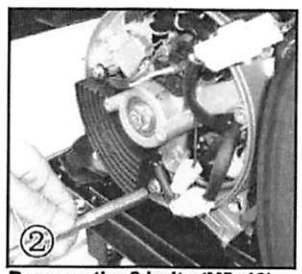

Remove the 2 bolts (M5x16) holding the AVR.

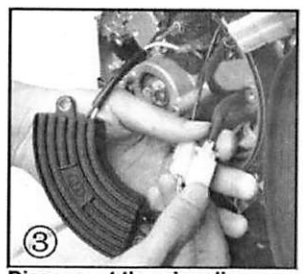

Disconnect the wire clip.

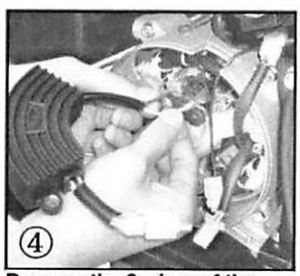

Remove the 2 wires of the AVR from the carbon brush.

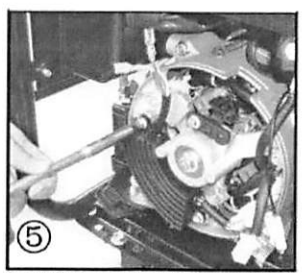

Install the new AVR with the 2 bolts (M5x16).

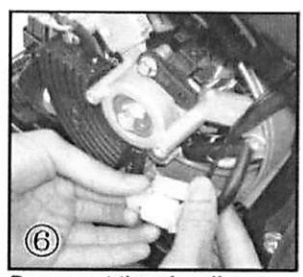

Reconnect the wire clip.

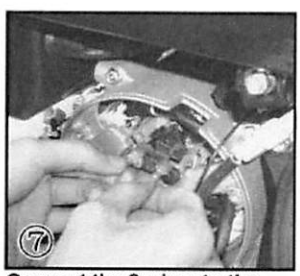

Connect the 2 wires to the carbon brush, be sure to connect the + and - correctly.

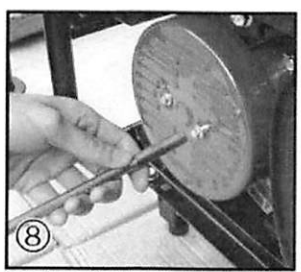

Replace the back cover of the generator and secure with the 2 bolts (M5x12).

WIRING DIAGRAM (XP4400H)

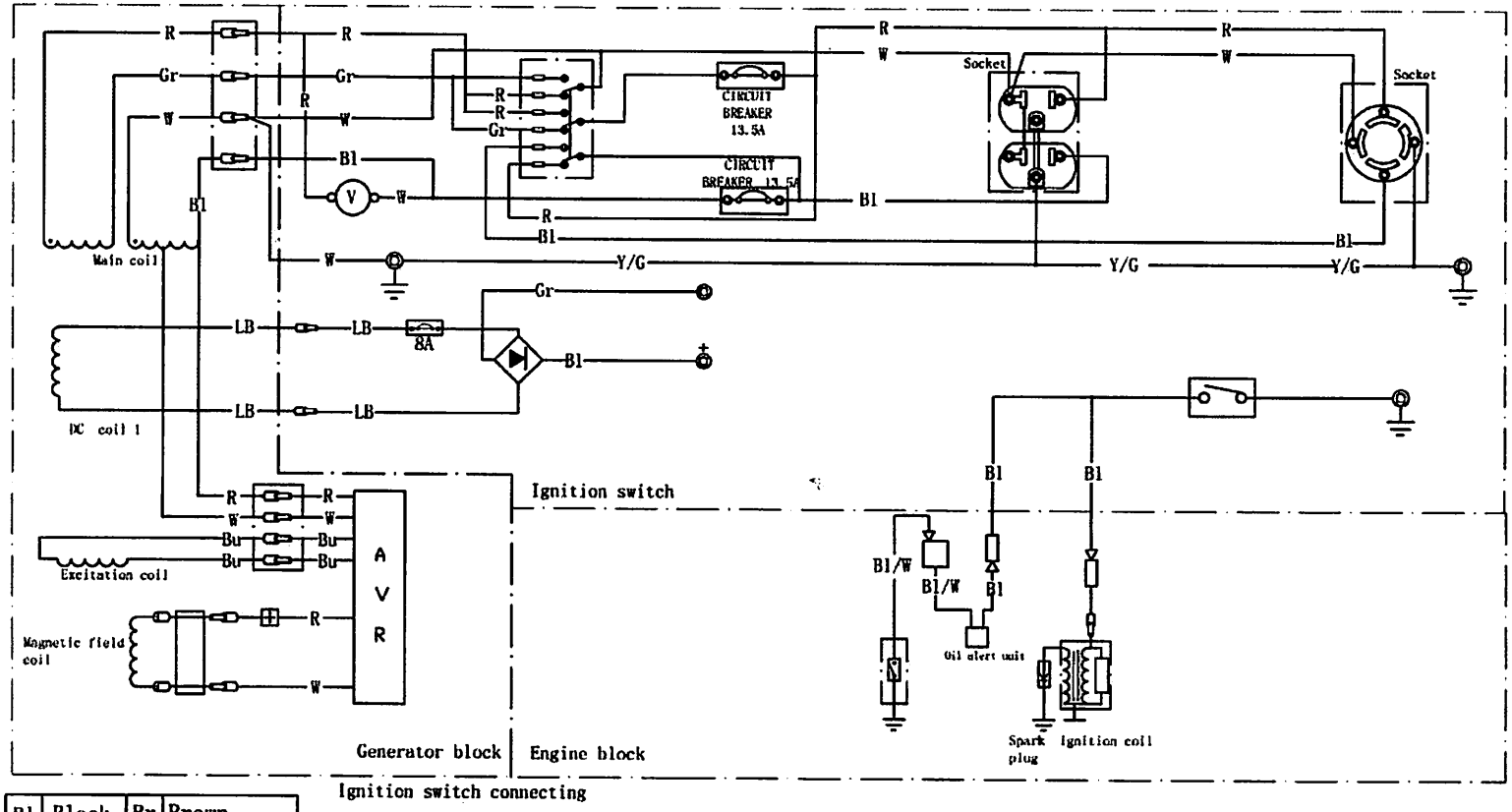

Bl	Black	Br	Brown
O	Orange	Br/R	Brown/Red
Bu	Blue	LB	Light blue
Gr	Gray	Y/G	Yellow/Green
R	Red	W	White

	IG	E	BAT	ST	FS	G
OFF	o—o				o—o	
ON						
Start			o—o			

WIRING DIAGRAM OF 120V/240V GENERATOR SET

WIRING DIAGRAM (XP4400EH)

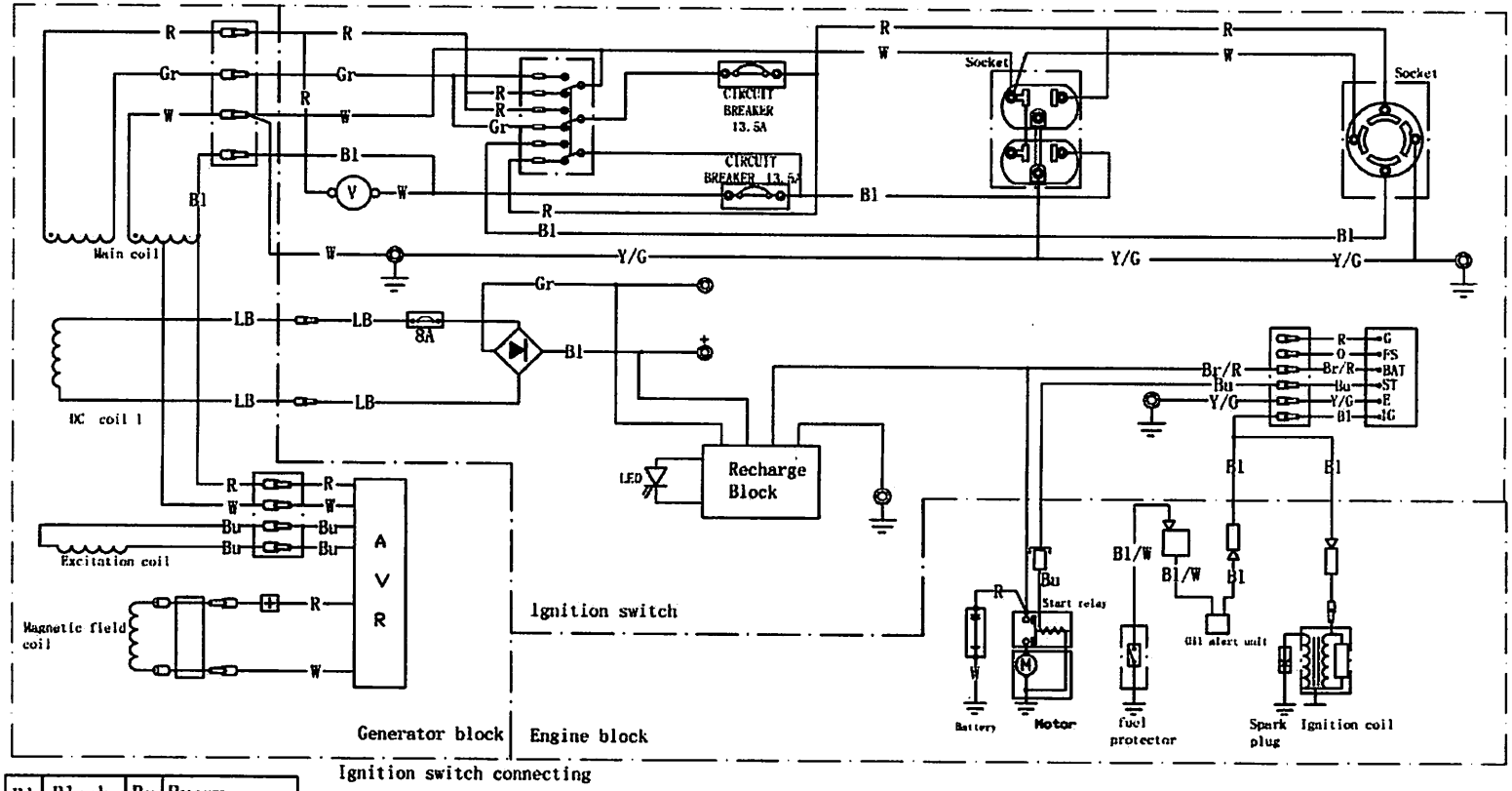

Bl	Black	Br	Brown
O	Orange	Br/R	Brown/Red
Bu	Blue	LB	Light blue
Gr	Gray	Y/G	Yellow/Green
R	Red	W	White

	IG	E	BAT	ST	FS	G
OFF	o—o				o—o	
ON						
Start			o—o			

WIRING DIAGRAM OF 120V/240V GENERATOR SET

XP4400E ENGINE EXPLODED

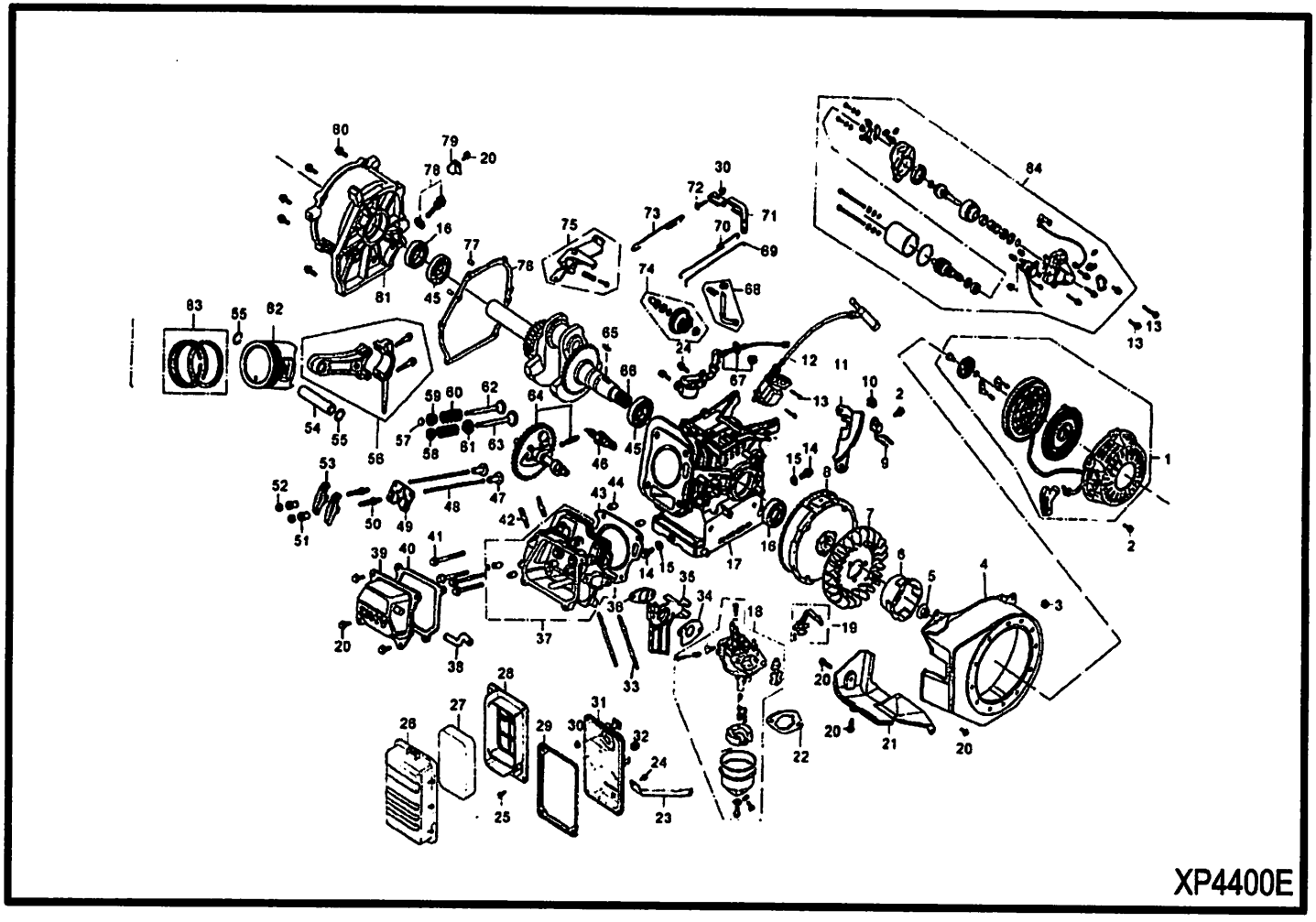

PARTS LIST

Part No.	Article Name	Qty	Cross Reference	Reference No.
1	Recoiler COMP	1	DJ168F-16121-K	XP4400E-1
2	Flange Bolt.M6*8	4	GBT5787-B6-8	XP4400E-2
3	Grommet Drain Hole	1	DJ168F-16118	XP4400E-3
4	Covering Fan COMP	1	DJ170N-16121-A	XP4400E-4
5	Flange, Nut M14	1	GBT6177/10-N-14	XP4400E-5
6	Starting Pulley	1	DJ168F-16000-A	XP4400E-6
7	Cooling Fan	1	DJ168F-16002-A	XP4400E-7
8	Flywheel COMP	1	DJ168F-16200-I	XP4400E-8
9	Oil Blocker	1	DJ168F-18300-A	XP4400E-9
10	**Clip, Oil blocker**	**1**	****SEE REF NO.**	**XP4400E-10**
11	Side Plate	1	DJ170S-11400-A	XP4400E-11
12	Coil ASSY, Ignition	1	DJ168F-18100-C	XP4400E-12
13	Flange Bolt M6*25	2	GBT5787-B6-25	XP4400E-13
14	Bolt, Drain plug	2	DJ168F-11004-A	XP4400E-14
15	Washer, Drain plug	2	DJ168F-11005-A	XP4400E-15
16	Oil seal, 25*41*6	2	DJ168F-11014-A	XP4400E-16
17	Crank Case ASSY	1	DJ170F-11100-C	XP4400E-17
18	**LPG Carburetor ASSY**	**1**	**DJ170FD-14100-C**	**XP4400E-18**
19	Lever COMP, Choke	1	DJ168F-14119	XP4400E-19
20	Flange Bolt M6*12	11	GBT5787-B6-16	XP4400E-20
21	Shroud COMP	1	DJ168F-11012-A	XP4400E-21
22	Gasket, Carburetor to Air cleaner	1	DJ168F-14027-A	XP4400E-22
23	Stay, Air cleaner	1	DF2500H-14205-A	XP4400E-23
24	Flange Bolt M6*12	3	GBT5787-B6-12	XP4400E-24
25	Bolt,M5*12	4	GBT5787-B5-14	XP4400E-25
26	Cover COMP, Air cleaner	1	DJ168F-14204	XP4400E-26
27	Element, Air cleaner	1	DJ170F-14201	XP4400E-27
28	Seperator, Air cleaner	1	DJ168F-14202	XP4400E-28
29	Seal, air cleaner	1	DJ168F-14206	XP4400E-29
30	Flange nut M6	2	GBT6177-N-6	XP4400E-30
31	Case COMP, air cleaner	1	DJ168F-14205-A	XP4400E-31
32	Grommet Fender	1	DJ168F-14014-A	XP4400E-32
33	Bolt Head, 6*94	2	DJ168FD-14001-A	XP4400E-33
34	Gasket,Carburetor	1	DJ168F-14005-A	XP4400E-34
35	Heat Isolator,Carburetor	1	DJ168F-14004-A	XP4400E-35
36	Packing, Heat isolator	1	DJ168F-14003-B	XP4400E-36
37	Cylinder Head COMP	1	DJ170F-11200-B	XP4400E-37
38	Breather	1	DJ168FD-11013-A	XP4400E-38
39	Cover COMP, Cylinder head	1	DJ168F-11300-C	XP4400E-39
40	Gasket,Cylinder head	1	DJ168F-11011-A	XP4400E-40
41	Flange Bolt M8*60	4	GBT5787-B8-60	XP4400E-41
42	Bolt Head, M8*32	2	DJ168F-14002-A	XP4400E-42
43	Gasket,Cylinder head	1	DJ170F-11010-C	XP4400E-43
44	Pin,Dowel 10*16	2	DJ168F-11009-A	XP4400E-44
45	Radial Ball Bearing(6025)	2	GB278-89-6205	XP4400E-45

Part No.	Article Name	Qty	Cross Reference	Reference No.
46	Spark Plug	1	DJ168F-18500-A	XP4400E-46
47	Valve Lifter	2	DJ170F-13009-A	XP4400E-47
48	Push Rod	2	DJ170F-13008-B	XP4400E-48
49	Plate,Push rod guide	1	DJ168F-13300-A	XP4400E-49
50	Bolt,Pivot	2	DJ168F-13202-A	XP4400E-50
51	Nut,Valve rocker arm	2	DJ168F-13203-A	XP4400E-51
52	Nut, Pivot Adjust	2	DJ168F-13204-A	XP4400E-52
53	Valve Rocker Arm	2	DJ168F-413201-A	XP4400E-53
54	Piston Pin	1	DJ170F-12002-A	XP4400E-54
55	Clip, Piston pin	2	DJ168F-12003-A	XP4400E-55
56	Connecting Rod ASSY	1	DJ170F-12200-B	XP4400E-56
57	Valve Rocker	1	DJ168F-13006-A	XP4400E-57
58	Retainer,Intake Valve spring	1	DJ168F-13004-A	XP4400E-58
59	Retainer,EX.Valve spring	1	DJ168F-13005-A	XP4400E-59
60	Valve Spring	2	DJ168F-13003-A	XP4400E-60
61	Valve Spring Seat	1	DJ168F-13010-A	XP4400E-61
62	Valve Exhaust	1	DJ168F-13001-A	XP4400E-62
63	Valve,Intake	1	DJ168F-13002-A	XP4400E-63
64	Camshaft	1	DJ168F-13100-B	XP4400E-64
65	Key,25*18	1	DJ168F-12104	XP4400E-65
66	Crankshaft	1	DJ168F-12100-BB	XP4400E-66
67	Switch ASSY, Oil level	1	DJ168F-18200-A	XP4400E-67
68	Governor Shaft	1	DJ168F-15001-A	XP4400E-68
69	Rod,Governor arm	1	DJ168F-15006-A	XP4400E-69
70	Spring, Throttle return	1	DJ170F-15008-A	XP4400E-70
71	Governor Arm	1	DJ168F-15004-A	XP4400E-71
72	Bolt, Governor arm	1	DJ168F-15005-A	XP4400E-72
73	Governor Spring	1	DJ170F-15007-A	XP4400E-73
74	Governor ASSY	1	DJ168F-15100-A	XP4400E-74
75	Control ASSY	1	DJ168FD-15200-A	XP4400E-75
76	Packing, Case cover	1	DJ170F-11003-B	XP4400E-76
77	Pin,Dowel 8*14	2	DJ168F-11002-F	XP4400E-77
78	Cap, Oil filler	1	DJ168F-11007-A	XP4400E-78
79	Plat	1	DF1800H-33016-A	XP4400E-79
80	Flange Bolt M8*32	6	GBT5787-B8-35	XP4400E-80
81	Crankcase Cover	1	DJ168FD-11001-C	XP4400E-81
82	Piston	1	DJ170F-12001-B	XP4400E-82
83	Piston Ring Set	1	DJ170F-12300-A	XP4400E-83
84	Start Motor	1	DJ168F-18600-A	XP4400E-84

XP4400E OTHERS EXPLODED

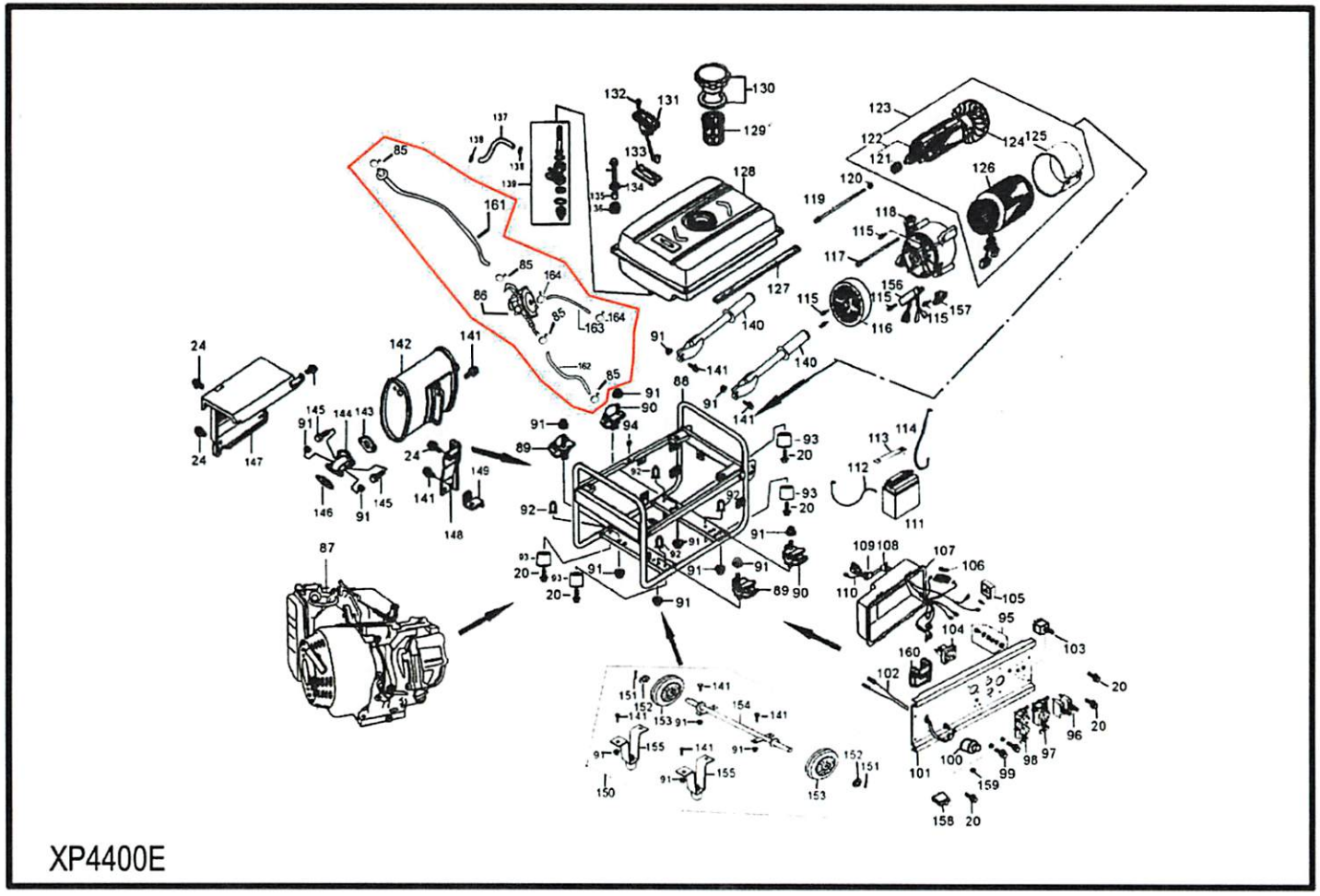

PARTS LIST

Part No.	Article Name	Qty	Cross Reference	Reference No.
85	Clip, Tube	4	**SEE REF NO.	XP4400E-85
86	Pressure Release Valve	1	**SEE REF NO.	XP4400E-86
87	Gasoline engine,Whole set	1	DJ170FD-BD	XP4400E-87
88	Frame COMP	1	XP4400E-31100-B	XP4400E-88
89	Bottom Rubber A	2	DF2500H-31201-A	XP4400E-89
90	Bottom Rubber B	2	DF2500H-31202-A	XP4400E-90
91	Flange Nut M8	18	DBT6177-N-8	XP4400E-91
92	Flange Nut M6	4	GBT889-N-8	XP4400E-92
93	Cushion.Frame	4	**SEE REF NO.	XP4400E-93
94	Rubber Pad, Frame	2	DF2500H-14304-A	XP4400E-94
95	Earth Terminal Set	1	34107	XP4400E-95
96	Circuit Breaker	1	34206-100	XP4400E-96
97	Receptacle (30A)	1	34204-003	XP4400E-97
98	Receptacle (20A)	2	34204-005	XP4400E-98
99	DC Output Post	2	34204-038	XP4400E-99
100	Engine Switch	1	34203-002	XP4400E-100
101	Control Panel	1	XP4400E-34101-A	XP4400E-101
102	Sub Harness	1	34213-002	XP4400E-102
103	Voltage Option Switch	1	34202-006	XP4400E-103
104	Voltage Meter	1	34205-001	XP4400E-104
105	Diode ASSY	1	34210-001	XP4400E-105
106	Fuse	1	**SEE REF NO.	XP4400E-106
107	Control Panel Case	1	34102-A	XP4400E-107
108	Boot, Main Wire Harness	1	34109	XP4400E-108
109	Boot, AC Output Wire	1	34117	XP4400E-109
110	Wire Harness ASSY	1	34212-001	XP4400E-110
111	Battery	1	31300-001	XP4400E-111
112	Positive Wire.Battery	1	31038-001	XP4400E-112
113	Battery Cover	1	DF1800H-31033-A	XP4400E-113
114	Negative Wire,Battery	1	31040-001	XP4400E-114
115	Flange Bott M5*12	2	GBT5789-B5-16	XP4400E-115
116	Alternator Cover	1	DF1800H-33006-B	XP4400E-116
117	Flange Bolt M6*125	4	DF3500H-33015-A	XP4400E-117
118	Supporting Stand	1	DF1800H-33005-A	XP4400E-118
119	Bolt M8*180	1	DF3500H-33003-A	XP4400E-119
120	Plain Washerφ10	1	GBT93-LW-8	XP4400E-120
121	Bearing 6204-2RS	1	GB276-89-6204	XP4400E-121
122	Rotator COMP	1	DF3500H-33110-B	XP4400E-122
123	Stator & Rotator ASSY	1	DF3000H33103-B-23602	XP4400E-123
124	Generator Fan	1	DF2500H-33023	XP4400E-124
125	Stator Cover	1	DF3500H-33129	XP4400E-125
126	Stator ASSY	1	DF3500H-33120	XP4400E-126
127	Stripe, Fuel Tank	1	DF2500H-14322-D	XP4400E-127
128	Fuel Tank	1	DF2500H-14300-B	XP4400E-128
129	Fuel Filter	1	14307	XP4400E-129

PartNo.	Article Name	Qty	Cross Reference	Reference No.
130	Cap	1	14306	XP4400E-130
131	Fuel Sensor	1	14303	XP4400E-131
132	Screw M5*10	2	GBT819-B-5	XP4400E-132
133	Gasket, Fuel Tank	1	14313	XP4400E-133
134	Washer	4	14311	XP4400E-134
135	Collar	4	14305	XP4400E-135
136	Cushion	4	14304	XP4400E-136
137	Outlet Pipe φ4.5*165	1	DF168FD-14007-C	XP4400E-137
138	Tube Clip	2	DJ168F-14008-A	XP4400E-138
139	Fuel Cock	1	DF2500H-14302-A	XP4400E-139
140	Handles	2	DF63800H-31058-C	XP4400E-140
141	Flange Bolt M8*16	17	GBT889-N-8X20	XP4400E-141
142	Muffler	1	DF2500H-14400-E	XP4400E-142
143	Muffler Gasket	1	DJ168F-14006-A	XP4400E-143
144	Exhaust Pipe COMP	1	DJF2500H-14009	XP4400E-144
145	Flange Bolt M8*25	2	GB5787-B-6	XP4400E-145
146	Exhaust Pipe Gasket	1	DJ188F-14010-A	XP4400E-146
147	Muffler Guard	1	DF2500H-14018-B	XP4400E-147
148	Muffler Stay	1	**SEE REF NO.	XP4400E-148
149	Supporting Plate	1	**SEE REF NO.	XP4400E-149
150	Wheel ASSY	1	XP4400E-WK	XP4400E-150
151	Pin	2	DF2500H-31019-B	XP4400E-151
152	Washer φ20	2	**SEE REF NO.	XP4400E-152
153	Wheel COMP	2	31017-F	XP4400E-153
154	Well Shaft	1	DF3000H-31018-F	XP4400E-154
155	Bracket	2	DF3000H-31070-E	XP4400E-155
156	Voltage Regulator	1	DF2500H-33011-A	XP4400E-156
157	Brush ASSY	1	DF3500H-33001	XP4400E-157
158	Circuit Protector (10A)	1	34208-004	XP4400E-158
159	Recharge Indicator	1	**SEE REF NO.	XP4400E-159
160	DC 12V Voltage Regulator	1	34224-001	XP4400E-160
161	Gas tube	1	**SEE REF NO.	XP4400E-161
162	Intake tube, carburetor	1	**SEE REF NO.	XP4400E-162
163	Pressure tube	1	**SEE REF NO.	XP4400E-163
164	Clipφ8	2	**SEE REF NO.	XP4400E-164

EXHIBIT E

1 of 31

NEXT G

YSTEMS

Document properties

Description

File name:	XP4400EH MANUAL (REV 062612).pdf
File size:	3.4 MB
Title:	XP4400EH MANUAL (REV 060512)_opt....
Author:	cs732
Subject:	Not available
Keywords:	Not available
Created on:	6/5/2012, 5:14:39 PM
Modified on:	6/27/2012, 6:24:18 PM
Creator:	Not available

Advanced

PDF producer:	PDF Printer / www.bullzip.com / CP / Fr...
PDF version:	1.5
Location:	C:/Users/mgross/Downloads/XP4400EH...
Page count:	31
Page size:	Varies
Fast web view:	No

Close

DUAL FUEL HYBRID ELITE XP4400EH

EXHIBIT F

DuroMax NEXT GENERATION POWER SYSTEMS XP4400EH

FEATURES:

-Clean running propane will not gum up or foul the carburetor for quick and reliable starts every time.
-Unlike gasoline, liquid propane can be stored for years.
-Flexible fuel line allows for connecting to tanks of any size.
-Designed to run on gasoline or propane for maximum convenience.
-Durable DuroMax 7.0 HP air cooled engine
-Heavy duty steel frame with four point, fully isolated motor mounts for smooth and quiet operation.
-Electric Key start for easy starting when you need it.
-Wheel kit w/ front handles for easy transporting.
-Full power panel with engine shutoff switch, volt meter, circuit breaker and power outlets.
-(2) Fully protected 120 volts outlets & (1) 120 volts/240 volts twist-lock outlet.
-Approximately 20 hour run time (propane) & 12 hour run time (gasoline)
-All steel 4 gallon fuel tank with ez-read gauge.
-Low oil shut-off protects engine.
-Super quiet muffler reduces engine noise.
-Idle control holds RPM at a constant level even under heavy loads for fuel savings and noise reduction.

Equipped with Sturdy Handles & Knobby Tires

Fully Loaded Power Panel

SPECIFICATIONS:

-Max AC Output: 4400 Watts
-Rated AC Output: 3500 Watts
-Current (120V/240V AC & 12V DC)
-(2) 120V 20A 3-prong outlets (Standard Household plug)
-(1) 120V/240V 30A twist lock (NEMA L14-30 3 Pole 4 Wire)
-Low oil shutoff.
-EPA approved engines.
-Super quiet exhaust w/ built-in spark arrestor.
-Electric Key and EZ-Pull recoil start
-7.0 HP air cooled engine
-Fuel Tank Capacity: 4 gallon
-Decibel: 69 dBA
-Gasoline Run-Time [@ 50% Max Output]: 12.0 hrs
-Propane Run-Time [@ 50% Max Output]: 20.0 hrs

QUIET 69db Noise
12 HOURS Continuous Run Time
KEYED Electric Ignition
4 GALLON Fuel Capacity
120/240 AC Voltage

OUTLETS:

120V 20A 3-Prong Outlet: (Standard Plug)
120V 20A 3-Prong Outlet: (Standard Plug)
120V/240V 30A Twist Lock: (NEMA L14-30 4 Pole Wire)
10A 12V Utility Connection

DUAL FUEL

EXHIBIT G

1 of 1

DuroMax NEXT GENERATION POWER SYSTEMS XP4400EH

FEATURES:

-Clean running pr
-Unlike gasoline, l
-Flexible fuel line
-Designed to run
-Durable DuroMax
-Heavy duty steel
-Electric Key start
-Wheel kit w/ front
-Full power panel
-(2) Fully protecte
-Approximately 20
-All steel 4 gallon
-Low oil shut-off p
-Super quiet muffl
-Idle control holds

rts every time.

et operation.

ets.

d noise reduction.

rk arrestor.

Output]: 12.0 hrs
Output]: 20.0 hrs

Fully Lo

Document properties

Description

File name:	XP4400EH_Flyer_2013.pdf
File size:	15.5 MB
Title:	Not available
Author:	Not available
Subject:	Not available
Keywords:	Not available
Created on:	5/16/2013, 9:03:22 AM
Modified on:	5/17/2013, 5:52:37 PM
Creator:	Adobe Photoshop CS5.1 Windows

Advanced

PDF producer:	Adobe Photoshop for Windows -- Imag...
PDF version:	1.4
Location:	C:/Users/mgross/Downloads/XP4400EH...
Page count:	1
Page size:	11.33 × 14.67 in (portrait)
Fast web view:	Yes

Close

OUTLETS:

120V 20A 3-Prong Outlet: (Standard Plug)
120V 20A 3-Prong Outlet: (Standard Plug)
120V/240V 30A Twist Lock: (NEMA L14-30 4 Pole Wire)
10A 12V Utility Connection

DUAL FUEL

EXHIBIT H

	UNITED STATES ENVIRONMENTAL PROTECTION AGENCY **2013 MODEL YEAR** **CERTIFICATE OF CONFORMITY** **WITH THE CLEAN AIR ACT OF 1990**	**OFFICE OF TRANSPORTATION AND AIR QUALITY** **ANN ARBOR, MICHIGAN 48105**

Certificate Issued To: Chongqing Maifeng Power Machinery Co., Ltd (U.S. Manufacturer or Importer) **Certificate Number: DCMGS.2081GL-004**	**Effective Date:** **02/27/2013** **Expiration Date:** **12/31/2013**	**Byron J. Bunker, Division Director** **Compliance Division**	**Issue Date:** **02/27/2013** **Revision Date:** **N/A**

Manufacturer: Chongqing Maifeng Power Machinery Co., Ltd **Engine Family:** DCMGS.2081GL **Certificate Number:** DCMGS.2081GL-004 **Useful Life :** 125 Hours / 2 Years **Engine Class :** Nonhandheld-Class I **Fuel :** LPG/Propane Gasoline (up to and including 10% Ethanol) **Emission Standards :** HC + NOx (g/kW-hr) : 10 CO (g/kW-hr) : 610	

Pursuant to Section 213 of the Clean Air Act (42 U.S.C. section 7547), 40 CFR Part 1054, 40 CFR Part 1068 and 40 CFR Part 60 (stationary only and combined stationary and mobile), and subject to the terms and conditions prescribed in those provisions, this certificate of conformity is hereby issued for the following small nonroad engine family, more fully described in the documentation required by 40 CFR Part 1054 and produced in the stated model year.

This certificate of conformity covers only those new small nonroad engines which conform in all material respects to the design specifications that applied to those engines described in the documentation required by 40 CFR Part 1054 and which are produced during the model year stated on this certificate of the said manufacturer, as defined in 40 CFR Part 1054. This certificate of conformity does not cover small nonroad engines imported prior to the effective date of the certificate.

It is a term of this certificate that the manufacturer shall consent to all inspections described in 40 CFR 1068.20 and 1068, Subpart E and authorized in a warrant or court order. Failure to comply with the requirements of such a warrant or court order may lead to revocation or suspension of this certificate for reasons specified in 40 CFR Part 1054. It is also a term of this certificate that this certificate may be revoked or suspended or rendered void *ab initio* for other reasons specified in 40 CFR Part 1054, 40 CFR Part 1068.

This certificate does not cover small nonroad engines sold, offered for sale, or introduced, or delivered for introduction, into commerce in the U.S. prior to the effective date of the certificate.

EXHIBIT I

DuroMax
NEXT GENERATION POWER SYSTEMS

DUAL FUEL

DUAL FUEL
HYBRID II XP4400EH
★★★★★ ELITE

OWNERS MANUAL

Product Support	Product Information, Application, Service Info & Warranty Questions
Please email us at support@duromaxgenerators.com or call (800) 629-3325 Monday – Friday 6:00 am – 6:00 pm (PST)	

TABLE OF CONTENTS

TABLE OF CONTENTS	2
FEATURES	3
SAFETY INFORMATION	4 - 6
COMPONENT IDENTIFICATION	7 - 9
PREPARING THE GENERATOR	9 - 12
STARTING THE GENERATOR GASOLINE	13
STARTING THE GENERATOR PROPANE	14
USING THE GENERATOR	15 - 18
WATTAGE REFERENCE CHART	16
MAINTENANCE	
Service Schedule	19
Checking the Oil	20
Changing the Oil	21
Air Cleaner Maintenance	22
Fuel Filter Cup Cleaning	22
Spark Plug Maintenance	23
Emptying the Gas Tank	23
Storage and Transportation	24
GENERATOR SPECIFICATIONS	25
TROUBLESHOOTING	26
WHEEL KIT ASSEMBLY	27
SERVICE INFORMATION	
Changing/Inspecting the Carbon Brush	28
Changing/Inspecting the AVR	29
Maintenance Log	30
Wiring Diagram	31
Parts Lists	32-35

Petitioner MWE Investments, LLC, et al.
Exhibit 1011, Page 72

FEATURES

- Dual Fuel Option, LPG or Gasoline.
- Durable 7.0 HP, Air Cooled Overhead Valve Engine.
- Heavy Duty Steel Frame with Four Point Fully Isolated Motor Mounts for Smooth and Quiet Operation.
- Wheel and Handle Kit for Easy Transporting.
- Full Power Panel with Engine Shutoff Switch, Volt Meter, Circuit Breaker, and Power Outlets.
- (2) Fully Protected 120V Outlets & (1) 120V/240V Twist-Lock Outlet.
- 8 Hour Run Time.
- All Steel 4.0 Gal. Fuel Tank with EZ-Read Gauge.
- Low Oil Shut-Off Protects Engine.
- Super Quiet Muffler Reduces Engine Noise.
- Meets EPA Emission Standards.

This manual provides information regarding the operation and maintenance of these products. We have made every effort to ensure the accuracy of the information in this manual. We reserve the right to change this product at any time without prior notice.

Notice Regarding Emissions

Engines that are certified to comply with U.S. EPA emission regulations for SORE (Small off Road Equipment), are certified to operate on regular unleaded gasoline, and may include the following emission control systems: (EM) Engine Modifications and (TWC) Three-Way Catalyst (if so equipped).

GENERAL SAFETY PROCEDURES

Please familiarize yourself with the following safety symbols and words:
The safety alert symbol is used with one of the safety words (**DANGER**, **CAUTION**, or **WARNING**) to alert you of hazards. Please pay attention to these hazard notices both in this manual and on the generator.

DANGER: Indicates a hazard that will result in serious injury or death if instructions are not followed.

WARNING: Indicates a strong possibility of causing serious injury or death if instructions are not followed.

CAUTION: Indicates a possibility of personal injury or equipment damage if instructions are not followed.

⚠ **DANGER:** This generator produces poisonous carbon monoxide gas when running. This gas is both odorless and colorless. Even if you do not see or smell gas, carbon monoxide may still be present. Breathing this poison can lead to headaches, dizziness, drowsiness, and eventually death.

- Use outdoors ONLY in non-confined areas.
- Keep several feet of clearance on all sides to allow proper ventilation of the generator.

⚠ **WARNING:** The exhaust from this product contains chemicals known to the State of California to cause cancer, birth defects, or other reproductive harm.

⚠ **WARNING:** This generator may emit highly flammable and explosive gasoline vapors, which can cause severe burns or even death. A nearby open flame can lead to an explosion even if not directly in contact with gas.

- Do not operate near an open flame.
- Do not smoke near generator.
- Always operate on a firm, level surface.
- Always turn generator off before refueling. Allow generator to cool for at least 2 minutes before removing fuel cap. Loosen cap slowly to relieve pressure in tank.
- Do not overfill gas tank. Gas may expand during operation. Do not fill to the top of the tank.
- Always check for spilled gas before operating.
- Empty the gasoline tank before storing or transporting the generator.
- Before transporting, turn fuel valve to the off position and disconnect the spark plug.

Petitioner MWE Investments, LLC, et al.
Exhibit 1011, Page 74

GENERAL SAFETY PROCEDURES (Continued)

⚠ **WARNING:** This generator produces a powerful voltage, which can result in electrocution.

- ALWAYS ground the generator before using it (see the "Grounding the Generator" portion of the "PREPARING THE GENERATOR FOR USE section).
- Generator should only be plugged into electrical devices, either directly or with an extension cord. NEVER connect to a building electrical system without a qualified electrician. Such connections must comply with local electrical laws and codes. Failure to comply can create a backflow of power, which may result in serious injury or death to utility workers.
- Use a ground fault circuit interrupter (GFCI) in highly conductive areas such as metal decking or steel work. GFCIs are available in-line with some extension cords.
- Do not use uncovered in rainy or wet conditions.
- Do not touch bare wires or receptacles (outlets).
- Do not allow children or non-qualified persons to operate.

⚠ **WARNING:** This generator produces heat when running. Temperatures near exhaust can exceed 150°F (65°C).

- Do not touch hot surfaces. Pay attention to warning labels on the generator denoting hot parts of the machine.
- Allow generator to cool several minutes after use before touching engine or areas which heat during use.

⚠ **CAUTION:** Misuse of this generator can damage it or shorten its life.

- Use the generator only for its intended purposes.
- Operate only on dry, level surfaces.
- Allow generator to run for 3 - 5 minutes before connecting any electrical devices.
- Shut off and disconnect any malfunctioning devices from generator.
- Do not exceed the Wattage capacity of the generator by plugging in more electrical devices than the unit can handle (see "PRECAUTIONS-OVERLOADING THE GENERATOR").
- Do not turn on electrical devices until after they are connected to the generator.
- Turn off all connected electrical devices, and turn off the breaker, before stopping the generator.

GENERAL SAFETY PROCEDURES (Continued)

In addition to the above safety notices, please familiarize yourself with the safety and hazard markings on the generator.

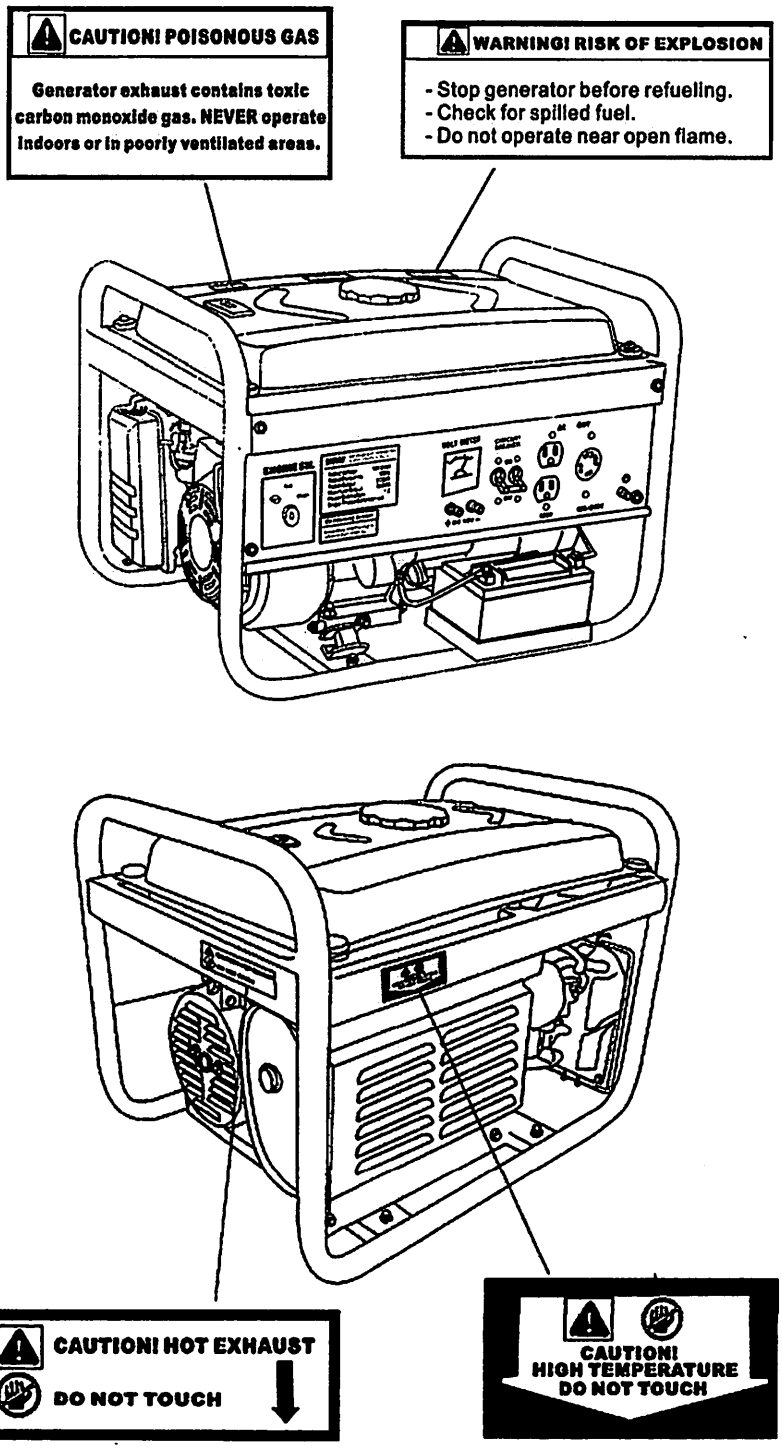

PACKAGE CONTENTS

Your generator comes with the items listed below. Please check to see that all of the following items are included with your generator.

Screw driver

Spanner

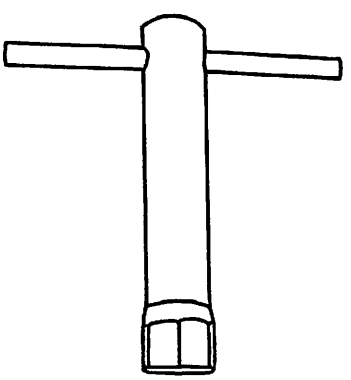

Spark plug wrench

GENERATOR COMPONENTS

Please familiarize yourself with the locations and functions of the various components and controls of your generator.

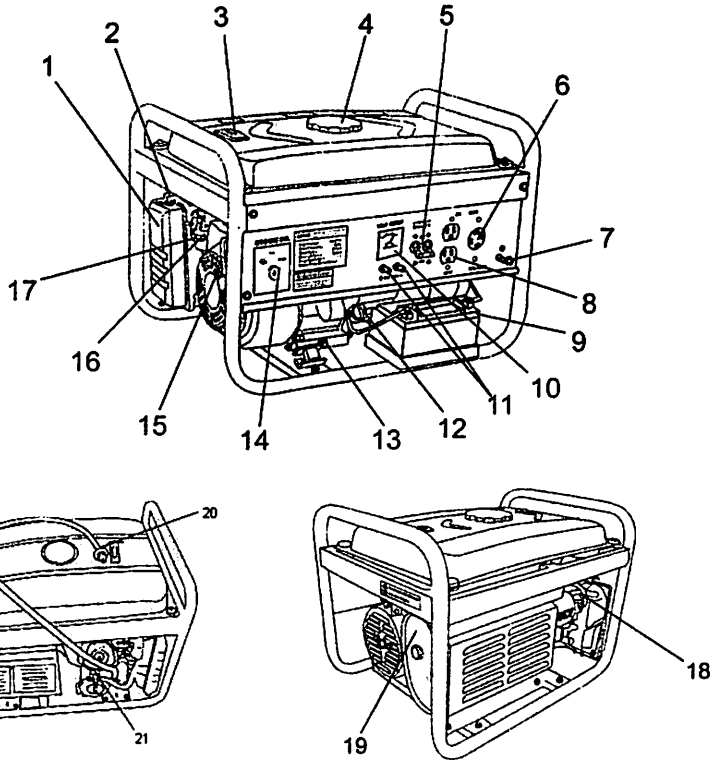

1. **Air Cleaner** - a removable, cleanable, oiled, sponge-like element that cleans the air going into the engine.
2. **Choke Lever** - Allows the airflow into the carburetor to be restricted to assist in starting the engine.
3. **Fuel Gauge** - Indicates the amount of fuel in the gasoline tank.
4. **Fuel Cap** - Allows access to fill the gasoline tank.
5. **Circuit Breaker** - Resettable switch that protects the generator from electrical overload.
6. **120/240v 4-Prong Receptacle** - Use to connect electrical devices that run 120 or 240 Volt, 60Hz, single phase, AC current (NEMA L14-30).
7. **Ground Terminal** - Connect a ground wire here to properly ground the generator.
8. **120v 3-Prong Receptacle** - Use to connect electrical devices that run 120 Volt, 60 Hz, single phase, AC current (NEMA 5-20).
9. **Battery** - 12V DC 7ah Battery that powers the Electric Start System.
10. **Volt Meter** - Provides reading of voltage output.
11. **12v DC Charging Posts** – DC Output for charging batteries or running small DC powered items.
12. **Oil Filler Cap** - Use to add or check the oil.
13. **Oil Fill and Dipstick** - Use to add or check the oil.
14. **Engine Switch** – 3 Position Switch to "Start", "Run", or turn "Off" the generator.
15. **Recoil Start** – Easy Pull Recoil Start to start the engine without the electric start.

GENERATOR COMPONENTS (Continued)

16. **Fuel Filter Cup** - Traps dirt and water in gasoline before it enters the engine.
17. **Fuel Valve** - On/Off Valve that allows fuel into the engine.
18. **Spark plug** – Provides ignition to the engine.
19. **Muffler** – Reduces engine emissions and reduces noise.
20. **Propane Tank Connector and Hose** – Connects the LPG tank to the LPG Regulator.
21. **Propane Regulator and Pressure Release Valve** - Provides a regulated LPG Fuel supply to the engine. ***(Intended for use with a LPG Source of 10 PSI or more.)***

PREPARING THE GENERATOR FOR USE

Using the Generator for the First Time

If you are using the generator for the first time, there are a few steps you must take to prepare it for operation.

Step 1 - Add oil

The generator requires engine oil to operate properly. The generator, when new from the package contains no oil in the crankcase. You must add the proper amount of oil before operating the generator for the first time. This amount, which is equal to the oil capacity of the engine crankcase can be found on the chart in figure 1. When filling the engine with oil in the future, please refer to this chart.

Model Number	XP4400EH
Engine Oil Capacity	20 fl. Oz. (0.6L)

Figure 1 – Generator Oil Capacity

- **Do not apply engine oil with additives or 2-stroke gasoline engine oil.** They don't have enough lubrication, and may shorten the engine's service life.
- **Engine oil recommended: SAE 10W-30.** Viscosity varies with regions and temperatures. Choose your oil viscosity using the chart to the right.

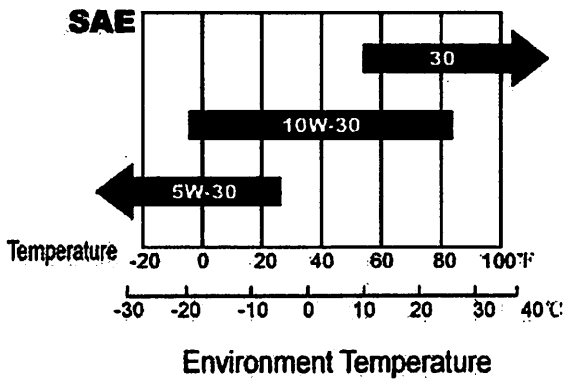

PREPARING THE GENERATOR FOR USE (Continued)

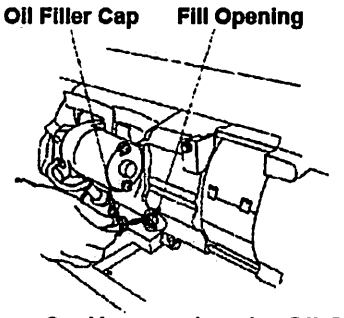

Figure 2 – Unscrewing the Oil Cap

Figure 3 – Adding Oil

To add Oil, follow these steps:

1. Make sure the generator is on a level surface.
2. Unscrew the oil filler/dipstick cap from the engine as shown in figure 2.
3. Using a funnel, add the appropriate amount of oil, as found in figure 1, into the crankcase. You will know the crankcase is full when the oil level has reached the lower lip of the opening you have just poured the oil into. (see figure 3.)
4. Replace oil filler cap.

Step 2 - Add Gasoline

- **WARNING: Gasoline and gas fumes are highly flammable.**
  - **Do not fill tank near an open flame.**
  - **Do not overfill. Always check for fuel spills.**

To ensure that the generator runs smoothly use only FRESH, UNLEADED GAS WITH AN OCTANE RATING OF 87 OR HIGHER.

To add gasoline:

1. Make sure the generator is on a level surface.
2. Unscrew gas cap and set aside (NOTE: the gas cap may be tight and hard to unscrew).
3. Slowly add unleaded gasoline to the fuel tank. Be careful not to overfill. Please refer to the chart in figure 4 to find the gas capacity of your generator model. The fuel gauge on the top of the gas tank indicates how much gasoline is in the generator gas tank.

   NOTE: Gas can expand. Do not fill the gas tank to the very top.
4. Replace fuel cap and wipe up any spilled gasoline with a dry cloth.

Petitioner MWE Investments, LLC, et al.
Exhibit 1011, Page 80

PREPARING THE GENERATOR FOR USE (Continued)

IMPORTANT:

- Never use an oil/gasoline mixture.
- Never use old gas.
- Avoid getting dirt or water in the fuel tank.
- Gas can age in the tank and make it hard to start up the generator in the future.
- Never store generator for extended periods of time with fuel in the tank.

Model #	XP4400EH
Gas Tank Capacity	3.96 US Gallons (15L)

Figure 4 - Gas Tank Capacity

Step 3 - Ground the Generator

- **WARNING: Failure to properly ground the generator can result in electrocution.**

Ground the generator by tightening the grounding nut against grounding wire (see figure 5). A generally acceptable grounding wire is a No. 12 AWG (American Wire Gauge) stranded copper wire. This grounding wire should be connected at the other end to a copper or brass-grounding rod that is driven into the earth. Grounding codes can vary by location. Please contact a local electrician to check the grounding regulations for your area.

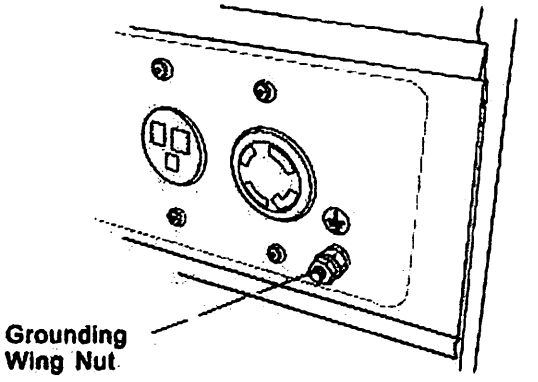

Figure 5 - Attaching the Grounding Wire to the Generator

Subsequent Use of the Generator

If this is not your first time using the generator there are still steps you should take to prepare it for operation.

IMPORTANT: At this point you should be familiar with the procedures described in the first portion of this section entitled "Using the Generator for the First Time." If you have not yet read this section, go back and read it now.

Step 1- Check the oil

The generator is equipped with an automatic shutoff to protect it from damage due to low oil. Nonetheless, you should check the oil level of the engine before each use to ensure that the engine crankcase has a sufficient amount.

To check the oil level:

1. Make sure the generator is on a level surface.
2. Unscrew the oil filler/dipstick cap.
3. With a dry cloth, wipe the oil off of the stick on the inside of the cap.
4. Insert the dipstick as if you were replacing the cap and then remove again. There should now be oil on the stick. If there is no oil on the stick, or oil only at the very end of the stick, you should add oil until the engine crankcase is filled (see "Adding Oil" portion of the "Maintenance" section).
5. Be sure to replace the cap when finished checking oil.

NOTE: The oil capacity for your generator can be found in the "Specifications" section of this manual.

Step 2 - Check the Gas Level

Before starting the generator, check to see that there is sufficient gasoline in the gas tank. The fuel gauge on top of the generator will indicate the gas level in the tank. Add gas if necessary according to the steps in the "Adding Gasoline" portion of the "Maintenance" section.

- WARNING: Gasoline and gasoline fumes are highly flammable.
    - Do not fill tank near an open flame.
    - Always allow engine to cool for several minutes before refueling.
    - Do not overfill (check the "Specifications" section for the tank capacity of your generator).
    - Always check for fuel spills.

Petitioner MWE Investments, LLC, et al.
Exhibit 1011, Page 82

Starting the Generator: Gasoline

⚠ CAUTION:

LPG must be shut off when using gasoline!
Gasoline must be shut off when using LPG!
Disconnect all electrical loads from the generator before attempting to start!

1. Make sure that the AC circuit breaker is in the OFF position. The generator may be hard to start if a load is connected.
2. Turn the fuel valve lever to the ON position.
3. The choke will need to be closed, slide the choke lever out to the CLOSED position.
4. Turn the engine switch to the START position and hold it there for 5 seconds or until the engine starts.

WARNING:

- Operating the starter motor for more than 5 seconds can damage the motor. If the engine fails to start, release the switch and wait 10 seconds before operating the starter again.
- If the speed of the starter motor drops after a period of time, it is an indication that the battery should be recharged.

5. When the engine starts, allow the engine switch to return to the ON position.
6. Push the choke to the OPEN position as the engine warms up.

Stopping the Engine

In an emergency:

⚠ To stop the engine in an emergency, move the engine switch to the OFF position.

In normal use:

1. Turn the AC circuit breaker to the OFF position. Disconnect any DC Load attached to the DC Output on the front panel.
2. Turn the engine switch to the OFF position.
3. Turn the fuel valve lever to the OFF position.

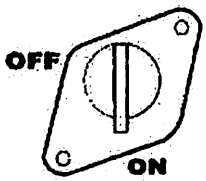

Figure 6 - fuel valve in the "on" position

Figure 7 - Choke in the close position

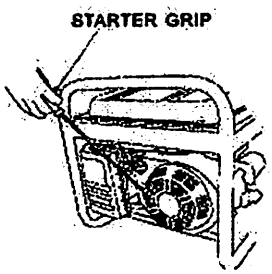

Figure 8 - Pulling the recoil start.

Starting the Generator: Propane

⚠ CAUTION:

LPG must be shut off when using gasoline!
Gasoline must be shut off when using LPG!
Disconnect all electrical loads from the generator before attempting to start!

1. Make sure that the AC circuit breaker is in the OFF position. The generator may be hard to start if a load is connected.
2. Turn the gasoline fuel valve to the "OFF" position.
3. Connect the propane gas hose to the regulator/decompression valve.
4. Connect the propane collar to the gas supply and then turn on the propane gas supply.
5. Press the button on top of the pressure release valve down two or three times.
6. The choke operates differently on propane gas.
    a. If the engine is warm (the unit was run recently) start with the choke half open.
        i. Wait 30 seconds and then push the choke lever all the way to the "OPEN" position.
    b. If the engine is cold (the unit was not run recently) start with the choke "OPEN".
7. Turn the engine key switch to the START position and hold it there for 5 seconds, or until the engine starts.

WARNING:

- Operating the starter motor for more than 5 seconds can damage the motor. If the engine fails to start, release the switch and wait 10 seconds before operating the starter again.
- If the speed of the starter motor drops after a period of time, it is an indication that the battery should be recharged.

8. When the engine starts, allow the engine switch to return to the ON position.

Stopping the Engine

In an emergency:

⚠ To stop the engine in an emergency, move the engine switch to the OFF position.

In normal use:

1. Turn the AC circuit breaker to the OFF position. Disconnect DC battery charging cables.
2. Turn the engine switch to the OFF position.
3. Turn OFF the Propane Gas Supply.

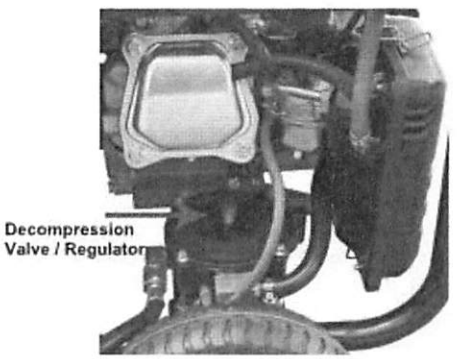

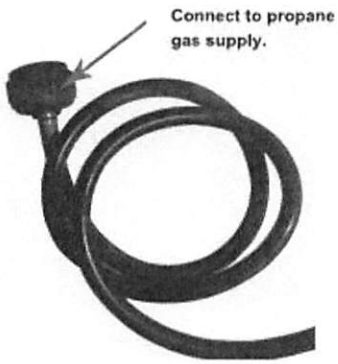

Starting the Generator: Propane (Continued)

⚠ WARNING: WHEN USING THE GENERATOR WITH LPG
MAKE SURE THERE IS NO POSSIBLE IGNITION SOURCE CLOSE TO THE GENERATOR.

1. Before using, make sure all of the LPG connectors and hoses are well connected and sealed.
2. Connect electrical devices to generator ONLY after the engine runs smoothly. (There may be remnant gasoline in the carburetor; this can cause unsteady engine performance for several minutes)
3. If the propane gas leaks, shut off the LPG supply first and then quickly unplug or turn off any electrical devices powered by the unit.
4. When stopping the engine, unplug or turn off any electrical devices, turn off the Main Circuit Breaker and then turn off the LPG Supply. After the engine has stopped turn the KEY to 'OFF" position.

Using the Generator

Once you have allowed the engine to run for several minutes, you may connect electrical devices to the generator.

AC Usage

- You may connect electrical devices running on AC current according to their wattage requirements.
- The chart in figure 9 shows the rated and surge wattage of your generator according to its model number.
- The *rated wattage* corresponds to the maximum wattage the generator can output on a continuous basis.
- The *surge wattage* corresponds to the maximum amount of power the generator can output for a short period of time. Many electrical devices such as refrigerators require short bursts of extra power, in addition the rated wattage listed by the device, to stop and start their motors. The surge wattage ability of the generator covers this extra power requirement.

Model Number	Rated (Running) Wattage	Surge (Peak) Wattage
XP4400EH	3500	4400

Figure 9 - Generator Wattage by Model Number

The total running wattage requirement of the electrical devices connected to the generator should not exceed the rated wattage of the generator itself. To calculate the total wattage requirement of the electrical devices you wish to connect, find the rated (or running) wattage of each device. This number should be listed somewhere on the device or in its instruction manual.

If you cannot find this wattage, you may calculate it by multiplying the Voltage requirement by the Amperage drawn: Watts = Volts x Amps. If these specifications are not available you may *estimate* the Watts required by your device by using the chart in figure 10.

Using the Generator (Continued)

Tool or Appliance	Rated (Running) Watts	Additional Surge Watts
Electric water heater (40 gal)	4000	0
Hot plate	2500	0
Saw-radial arm	2000	2000
Electric stove	1500	0
Saw-circular	1500	1500
Air compressor (1HP)	1500	3000
Window air conditioner	1200	1800
Saw-miter	1200	1800
Microwave	1000	2000
Well water pump	1000	1500
Reciprocating saw	960	1040
Sump pump	800	1200
Refrigerator freezer	800	1200
Furnace blower	800	1300
Computer	800	0
Electric drill	600	900
Television	500	0
Deep freezer	500	800
Garage door opener	480	600
Stereo	400	0
Box fan	300	600
Clock radio	300	0
Security system	180	0
DVD player/VCD	100	0
Common light bulb	75	0

Figure 10- Estimated wattage requirements of common electrical devices.

Once you have found the rated wattage requirement of each electrical device, add these numbers to find the total rated wattage you wish to draw from the generator. If this number exceeds the rated wattage of the generator, DO NOT connect all these devices. Select a combination of electrical devices, which has a total rated wattage lower than or equal to the rated wattage of the generator.

⚠ **CAUTION - The generator can only run at its surge wattage capacity for a very short time. Connect only electrical devices requiring a rated (running) wattage equal to or less than the rated wattage of the generator. Never connect devices requiring a rated wattage equal to the surge wattage of the generator.**

NOTE: The above wattage figures are estimates only. Try to check the wattage listed on your electrical devices before consulting this chart.

Connecting a Load to the Generator

NOTE: Be sure to attach devices to the correct receptacle (outlet).

- 120v devices can be directly connected to the 120v ONLY receptacles.
- 120v devices can be connected to the 120/240v receptacle using an appropriate adapter.
- 240v devices can ONLY be connected the 240v receptacle.

1. Plug in each electrical device with the device turned off.
2. Switch the circuit breaker to the "ON" position.
3. Turn on the connected electrical devices in the order of the amount of power they require beginning with the device with the highest rated Wattage requirement.

⚠ CAUTION: Do not connect 50Hz or 3-phase loads to the generator.

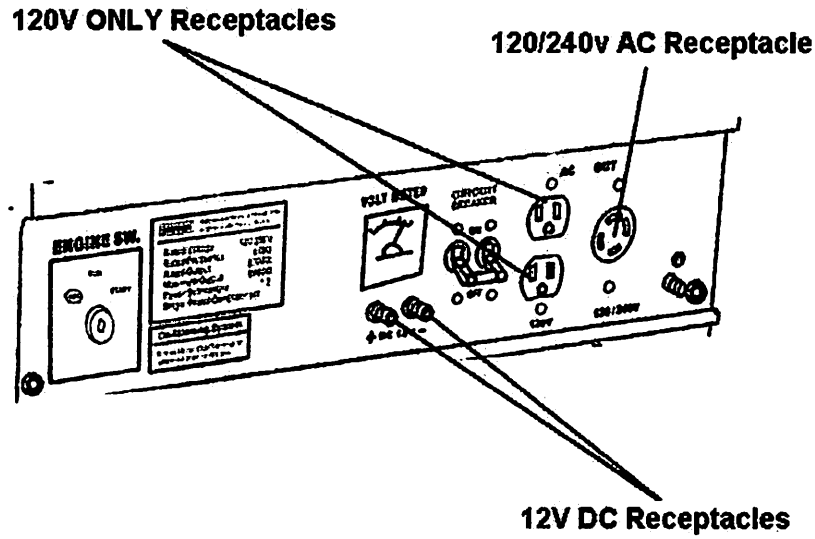

VOLTAGE SELECTOR SWITCH

The voltage selector switches the dual 120v AC windings of the generator to produce "120V ONLY" or "120/240V". If a 240V appliance is connected to the 4-prong receptacle, the switch must be in the "120/240V" position. If only 120V appliances are being connected to the generator select the "120V ONLY" position to double the 120v amperage.

WARNING:

Only change the Voltage Selector Switch with the main AC Circuit Breaker OFF. The generator can be seriously damaged if the Voltage Selector Switch is changed with the breaker ON.

Choosing the Right Power Cord

Long or thin cords can drain the power provided to an electrical device by the generator. When using such cords, allow for a slightly higher rated wattage requirement for the electrical device. See Figure 12 for recommended cords based on the power requirement of the electrical device.

DEVICE REQUIREMENTS		WIRE GAUGE BY LENGTH (ft.)				
AMPS	WATTS (120V/240V)	10	25	50	100	150
5	600/1200	18	16	14	12	10
10	1200/2400	16	14	12	10	8
15	1800/3600	14	12	10	8	6
20	2400/4800	12	10	8	6	4
25	3000/6000	10	8	6	4	4
30	3600/7200	8	6	4	4	NR
40	4800/9600	6	4	4	NR	NR
50	6000/1200	4	4	2	NR	NR
*NR = NOT RECOMMENDED						

Figure 12 – Minimum Extension Cord Requirements

DC Usage

⚠ **CAUTION: The DC receptacle is for recharging 12 Volt automotive-type batteries only. Do not connect any other device to this receptacle.**
⚠ **CAUTION: Never try to jump start a car with your generator.**

To connect a 12V battery to the DC battery charger on the front panel:

1. Connect one charging wire to the positive terminal on the battery and the other charging wire to the negative terminal on the battery.
2. Connect the free end of the positive wire to the positive receptacle (outlet) on the generator.
3. Start the generator.
4. Carefully connect the free end of the negative wire to the negative receptacle on the generator.
5. When disconnecting, always disconnect the wires from the generator first to avoid a spark.

⚠ **DANGER: Stored batteries emit highly explosive hydrogen gas when charged. Batteries also contain acid, which can cause severe chemical burns.**
⚠ **Do not allow open flames or cigarettes nearby for several minutes after charging a battery.**
⚠ **Always wear protective goggles and rubber gloves when charging a battery.**
⚠ **If battery acid gets on your skin, flush with water.**
⚠ **If battery acid gets in your eyes, flush with water and call a physician immediately.**
⚠ **If battery acid is swallowed, drink large quantities of milk and call a Physician immediately.**

If your generator is the electric start model, once running, it will charge the battery on the generator automatically. While charging, you can see the recharge indicator light lit, after the battery is full, the light will turn off.

MAINTENANCE AND CARE

The Importance of Maintenance

Proper routine maintenance of your generator is essential for safe, economical, and trouble-free operation. It will also help reduce air pollution.

Warning

Improper maintenance, or failure to correct a problem before operation, can cause a malfunction in which you can be seriously injured or killed. Always follow the inspection and maintenance recommendations and schedules in this instruction manual.

⚠ Maintenance Safety

- **Make sure the engine is off before you begin any maintenance or repairs.**
- **Let the engine and exhaust system cool before touching.**
- **To reduce the possibility of fire or explosion, be careful when working around gasoline. Use only a nonflammable solvent, not gasoline, to clean parts. Keep cigarettes, sparks, and flames away from all fuel related parts.**

Maintenance Schedule

Remember that this schedule is based on the assumption that your machine will be used for its designed purpose. Sustained high-load, high temperature operation, or use in unusually wet or dusty conditions, will require more frequent service.

SERVICE		REGULAR SERVICE PERIOD				
		BEFORE EACH USE	1 MO. OR 20 HRS.	3 MO. OR 50 HRS.	6 MO. OR 100 HRS.	12 MO. OR 300 HRS.
ENGINE OIL	CHECK	■				
	CHANGE		■			
AIR CLEANER	CHECK	■				
	CHANGE			■		
SEDIMENT CUP	CLEAN				■	
SPARK PLUG	CLEAN - ADJUST				■	
	REPLACE					■
SPARK ARRESTER	CLEAN				■	
IDLE SPEED	CHECK-ADJUST					■
VALVE CLEARANCE	CHECK-ADJUST					■
COMBUSTION CHAMBER	CLEAN	500 HRS.				
FUEL TANK AND FILTER	CLEAN				■	
FUEL TUBE	CHECK	EVERY 24 MO. (REPLACE IF NECESSARY)				
TO BE PERFORMED AT MONTH INDICATED OR HOUR INTERVAL WHICH EVER COMES FIRST						

Figure 13 – Maintenance Schedule.

Petitioner MWE Investments, LLC, et al.
Exhibit 1011, Page 89

Checking the Oil

The generator is equipped with an automatic shutoff to protect it from running on low oil. Nonetheless, you should check the oil level of the generator before each use to ensure that the generator crankcase has a sufficient amount.

To check the oil level:

1. Make sure the generator is on a level surface.
2. Unscrew the oil filler/dipstick cap (see figure 14).
3. With a dry cloth, wipe the oil off of the stick on the inside of the cap.
4. Insert the dipstick as if you were replacing the cap and then remove again. There should now be oil on the stick. If there is no oil on the stick, or oil only at the very end of the stick you should add oil until the engine crankcase is filled. See "Changing/Adding Oil" in this section.
5. Be sure to replace cap when you are finished checking the oil.

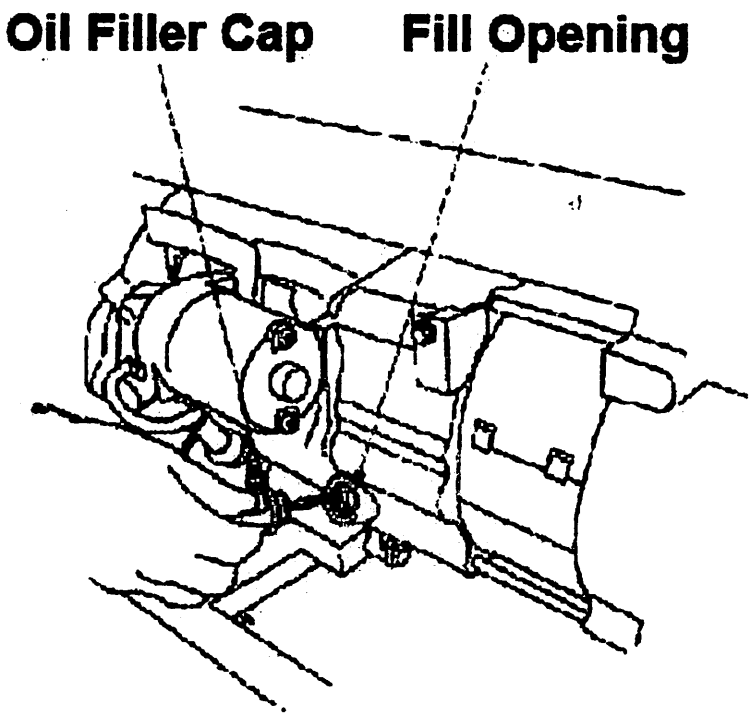

You should check the oil level of your generator according to the maintenance schedule in figure 13. When the oil level is low you will need to add oil until the level is sufficient to run the generator. The oil capacity of your generator engine is listed in figure 15.

Model Number	XP4400EH
Engine Oil Capacity	20 fl. Oz.

Figure 15 – Generator Oil Capacity

Petitioner MWE Investments, LLC, et al.
Exhibit 1011, Page 90

Changing the Oil

It is only necessary to drain the oil from the crankcase, other than for regular oil changes, if it has become contaminated with water or dirt. In this case, you can drain the oil from the generator according to the following steps:

1. Place an approved oil disposal container underneath the generator to catch the oil as it drains.
2. Using a 10 mm hex wrench, unscrew the oil drain plug, which is located on the crankcase underneath the oil filler/dipstick cap (see figure 16). Allow all the oil to drain from the generator.
3. Replace the oil drain plug and tighten with a 10 mm hex wrench.

To add oil to the crankcase, follow these steps:

1. Make sure the generator is on a level surface.
2. Unscrew the oil filler/dipstick cap from the engine as shown in figure 14 above.
3. Using a funnel, add motor oil to the crankcase. We recommend SAE 10W30 motor oil for general use. When full, the oil level should come close in the top of the oil fill opening. (See figure 17).

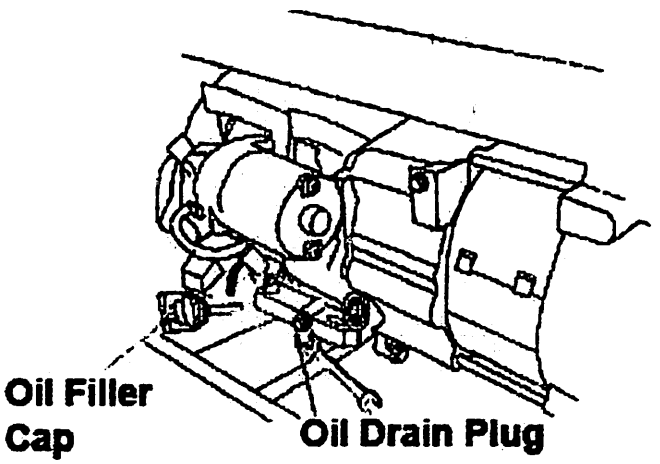

Figure 16: Draining the Oil

Figure 17: Adding Oil

Air Cleaner Maintenance

Routine maintenance of the air cleaner helps maintain proper airflow to the carburetor. Occasionally check that the air cleaner is free of excessive dirt.

1. Unhinge the clasps at the top and bottom of the air cleaner cover (see figure 18).
2. Remove the sponge-like elements from the casing.
3. Wipe the dirt from inside the empty air cleaner casing.
4. Wash the sponge-like elements in household dish detergent and warm water.
5. Allow the elements to dry completely.
6. Soak the dry elements in a small amount of engine oil. Ring out any excess oil.
7. Replace the sponge-like elements in the air cleaner casing and replace the cover.

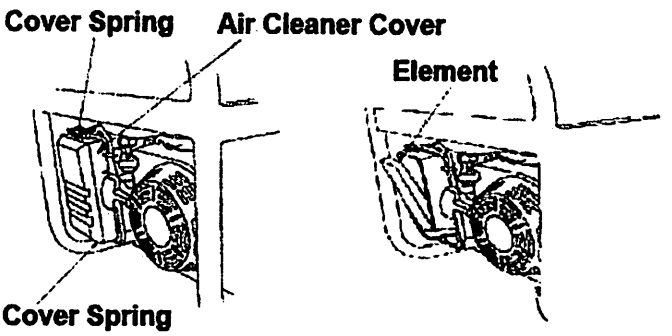

Figure 18 - Removing the Air Cleaner Casing.

Fuel Filter Cup Cleaning

The fuel filter cup is a small well underneath the fuel valve. It helps to trap dirt and water that may be in your fuel tank before it can enter the engine.

To clean the fuel filter cup:

1. Turn the fuel valve to the "OFF" position.
2. Unscrew the fuel filter cup from the fuel valve using a wrench. Turn the valve towards you to unscrew (see figure 19).
3. Clean the cup of all sediment using a rag or brush.
4. Reinstall the fuel filter cup.

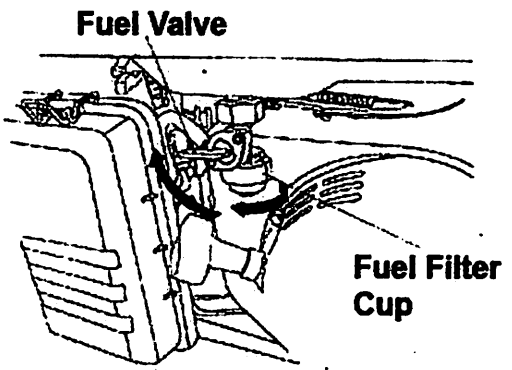

Figure 19 – Removing the Fuel Filter Cup

Spark Plug Maintenance

The spark plug is important for proper engine operation. A good spark plug should be intact, free of deposits, and properly gapped.

To inspect your spark plug:

1. Pull on the spark plug cap to remove it.
2. Unscrew the spark plug from the generator using the spark plug wrench included with this product (see figure 20).
3. Visually inspect the spark plug. If it is cracked or chipped, discard and replace with a new spark plug. We recommend using a F6RTC spark plug such as NGK BPR5ES.
4. Measure the plug gap with a gauge (see figure 21). The gap should be 0.7-0.8 mm (0.028-0.031 in).
5. If you are re-using the spark plug, use a wire brush to clean any dirt from around the spark plug base and then re-gap the spark plug.
6. Screw the spark plug back into its place on the generator using the spark plug wrench.
7. Replace the spark plug cap.

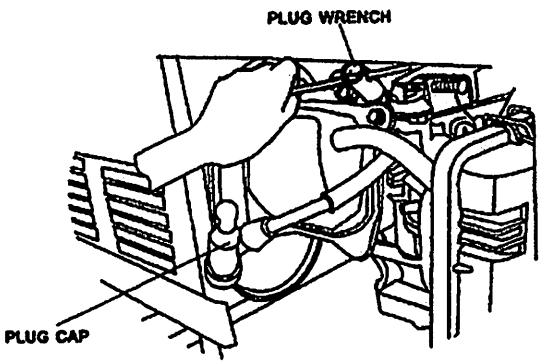

Figure 20- Removing the spark plug

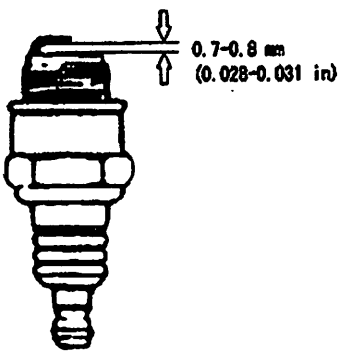

Figure 21- Measuring the spark plug gap

Emptying the Gas Tank

Before storing your generator for extended periods of time, you should drain your generator of gasoline.

To drain the generator of gas:

1. Turn the fuel valve to the "OFF" position.
2. Remove the fuel filter cup (see "Removing the Fuel Filter Cup" earlier in this section.
3. Empty the fuel filter cup of any fuel.
4. With a receptacle underneath the generator to catch the gas, turn the fuel valve to the "ON" position. Drain all the gas from the generator.
5. Turn the fuel valve to the "OFF" position.
6. Replace the fuel filter cup.
7. Store the emptied gasoline in a suitable place.

⚠ CAUTION: Do not store fuel from one season to another.

Storage and Transportation

⚠ **CAUTION: Never place any type of storage cover on the generator while it is still hot.**

When transporting your generator:

- Empty the gas tank (see "Emptying the Gas Tank" in the "Maintenance" section).
- Disconnect the spark plug.
- Do not obstruct any ventilation openings.
- Keep the generator in a cool dry area.

When storing your generator:

If you plan on starting the unit again the same day:

1. Turn off the main breaker.
2. Allow the unit to run 3 - 5 minutes.
3. Turn off the key.
4. Store.

If you plan on starting the unit again within 30 days:

1. Turn off the main breaker.
2. Allow the unit to run 3 - 5 minutes.
3. Turn off the fuel valve.
4. Allow the unit to stall out.
5. Turn off the key.
6. Add fuel stabilizer to the gas remaining in the tank.
7. Store.

If you do not plan to start the unit for longer than 30 days:

1. Turn off the main breaker.
2. Allow the unit to run 3 - 5 minutes.
3. Turn off the fuel valve.
4. Allow the unit to stall out.
5. Turn off the key.
6. Drain the fuel tank (See "Emptying the Gas Tank" in the "Maintenance" section)
7. Drain the carburetor
    a. Remove the drain bolt from the carburetor.
    b. Drain the small amount of remaining fuel from the carburetor bowl.
8. Oil the cylinder
    a. Remove the spark plug.
    b. Put 2 tbsp. of 10w30 motor oil directly into the spark plug hole
    c. Pull the recoil start one time.
    d. Replace the plug.
9. Remove the battery and place on tender indoors.

Generator Specifications		
AC Rated Wattage	3500W	
AC Surge Wattage	4400W	
AC Rated Voltage	120/240V	
AC Rated Frequency	60 Hz	
AC Phase	Single	
DC Voltage	12V	
DC Amperage	8.3A	
Dimensions (in.)	Length	23.2
	Width	17
	Height	17
Engine Type	4-Stroke OHV Forced-Air	
Ignition System	Non-Contact Transistor	
Displacement	210cc	
Starting Type	Electric	
Fuel Tank Capacity	3.96 US Gal. (15L)	
Oil Capacity	20 fl. oz. (0.6L)	
Run Time @ 50% (Gasoline)	12 hr.	
Run Time @ 50% (Propane)	16 hr. (5 Gallon)	
Noise Level	<69db	

Troubleshooting		
Problem	**Cause**	**Solution**
Engine will not start	Engine Switch is "Off"	Set Engine Switch to "Run"
	Fuel Valve is "Closed"	Turn Fuel Valve to "Open"
	Choke is open.	Close the Choke
	Engine is out of fuel.	Add Fuel
	Fuel is old or contaminated.	Change Fuel
	Spark Plug is dirty.	Clean Spark Plug
	Spark Plug is broken.	Replace Spark Plug
	Generator is not level.	Move generator to a level surface
	Oil is low.	Add/Change oil
Engine runs, but there is no electrical output.	Circuit Breaker is "Off"	Turn "On" Circuit Breaker
	Wiring connection is bad.	Replace Extension Cord(s)
	Device connected to generator is Malfunctioning.	Disconnect Malfunctioning Device
Generator runs, but does not support all electrical devices connected.	Generator is overloaded.	Disconnect 1 or more items to reduce the load
	Device connected to generator is bad.	Disconnect Malfunctioning Device
	Air Cleaner is Dirty.	Clean/Replace the Air Filter

Wheel Kit Assembly

The generator includes a wheel kit for easy transportation.

To install the wheel kit:

1. Please the generator on a flat, even surface. Temporarily place blocks under the generator to easy assembly.
   NOTE: DO NOT flip the generator upside down to install the wheel kit.
2. Secure the support legs to the frame with provided bolts and lock nuts. (See figure 22)
3. Secure the axle bracket welded to axle the frame with the provided bolts and lock nuts. (See figure 23)
4. Secure the loose axle bracket to the frame with the provided bolts and lock nuts. (See figure 24)
5. Slide one wheel over each axle end and secure with the provided retaining pins. (See Figures 25)
6. Attach the handles to the brackets on the frame using the provided bolts and nuts. (See Figures 26 and 27)
7. Check that all fasteners are tight.

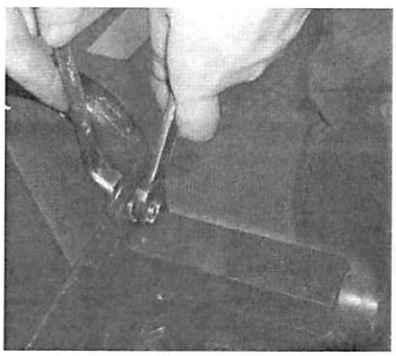
Figure 22

Figure 23

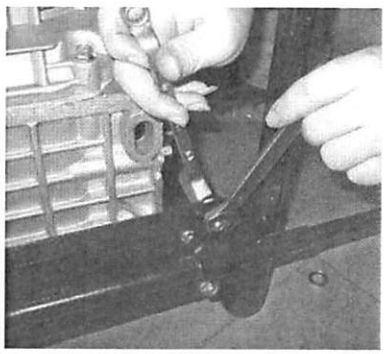
Figure 24

Figure 25

Figure 26

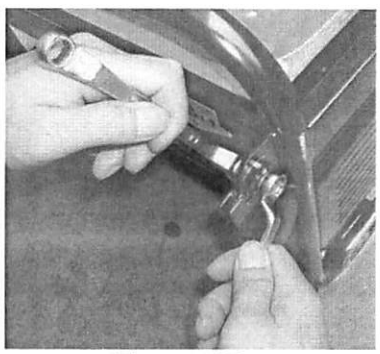
Figure 27

Changing/Inspecting the Carbon Brushes

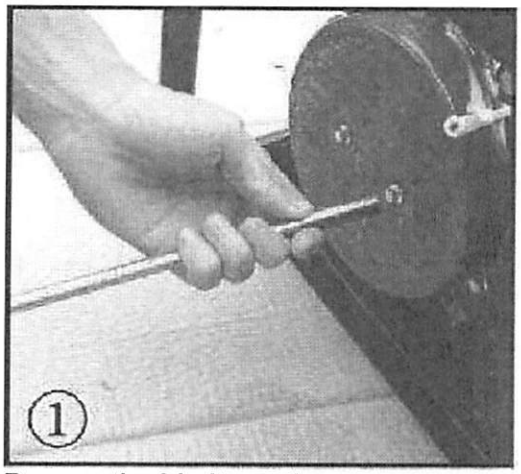

Remove the 2 bolts on the generator cover.

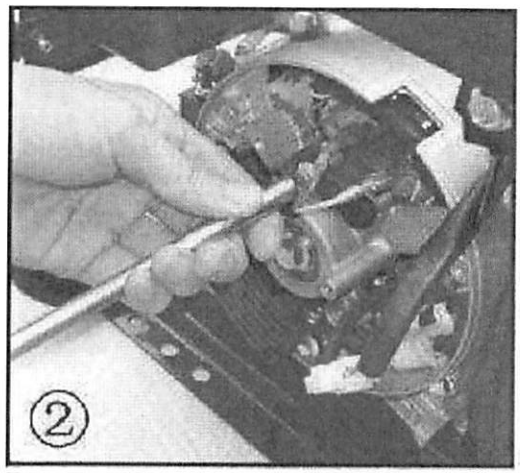

Remove the bolt holding the carbon brush.

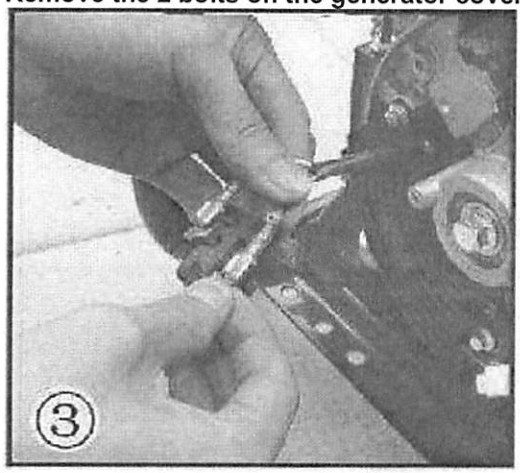

Remove the 2 wires from the AVR on the carbon brush.

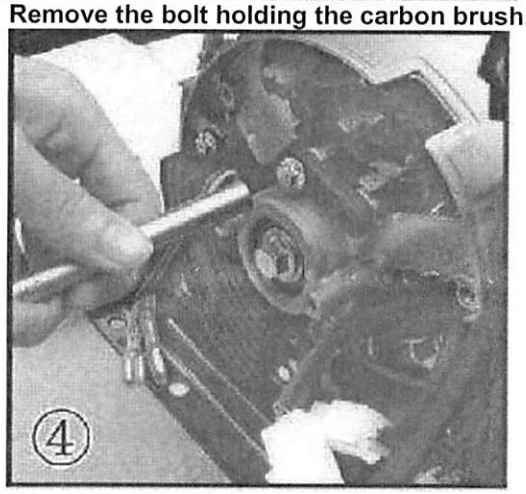

Install a new carbon brush with bolt.

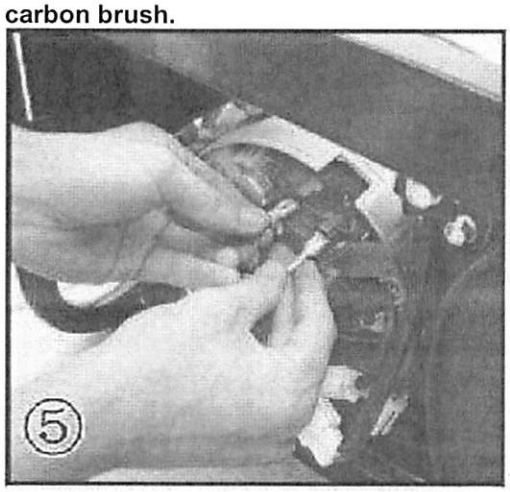

Insert and connect the 2 wires from the AVR, be sure to connect + and – correctly.

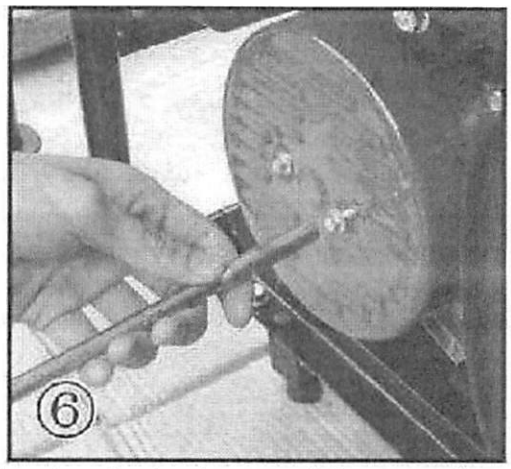

Replace the back cover of the generator and secure with the 2 bolts.

Changing/Inspecting the AVR

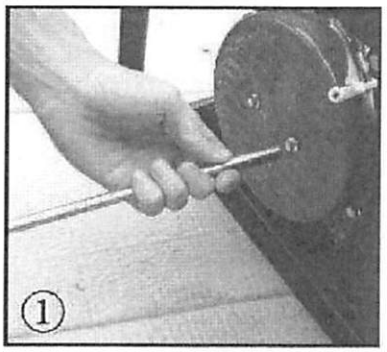

Remove the 2 bolts on the generator cover.

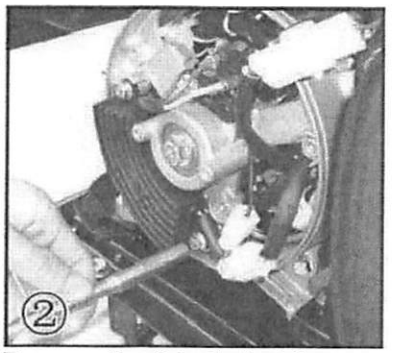

Remove the 2 bolts holding the AVR.

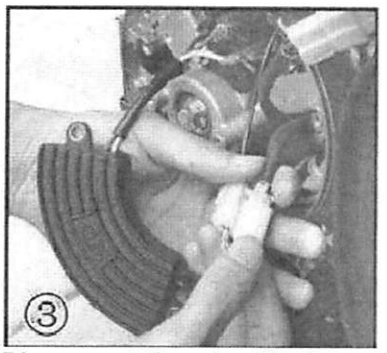

Disconnect the wire clip.

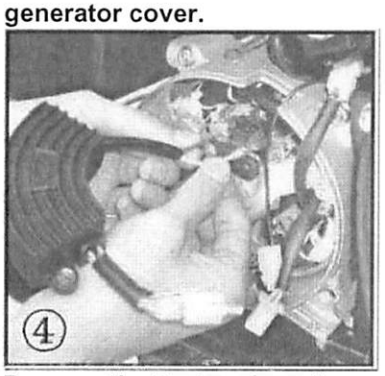

Remove the 2 wires from the AVR on the carbon brush.

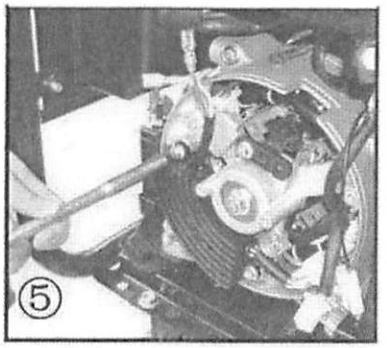

Install the new AVR with the 2 bolts.

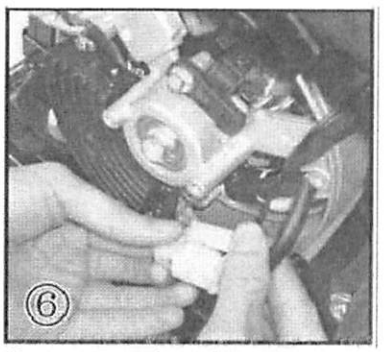

Reconnect the wire clip.

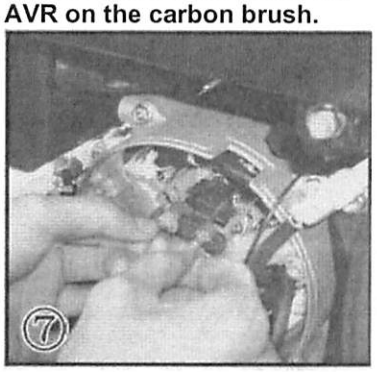

Insert and connect the 2 wires from the AVR, be sure to connect + and – correctly

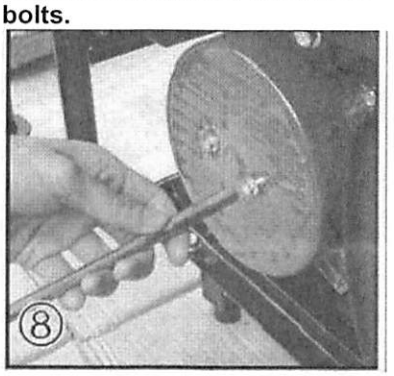

Replace the back cover of the generator and secure with the 2 bolts.

Maintenance Log

MODEL: XP4400EH		
Date	Generator Hrs.	Maintenance Performed

Wiring Diagram

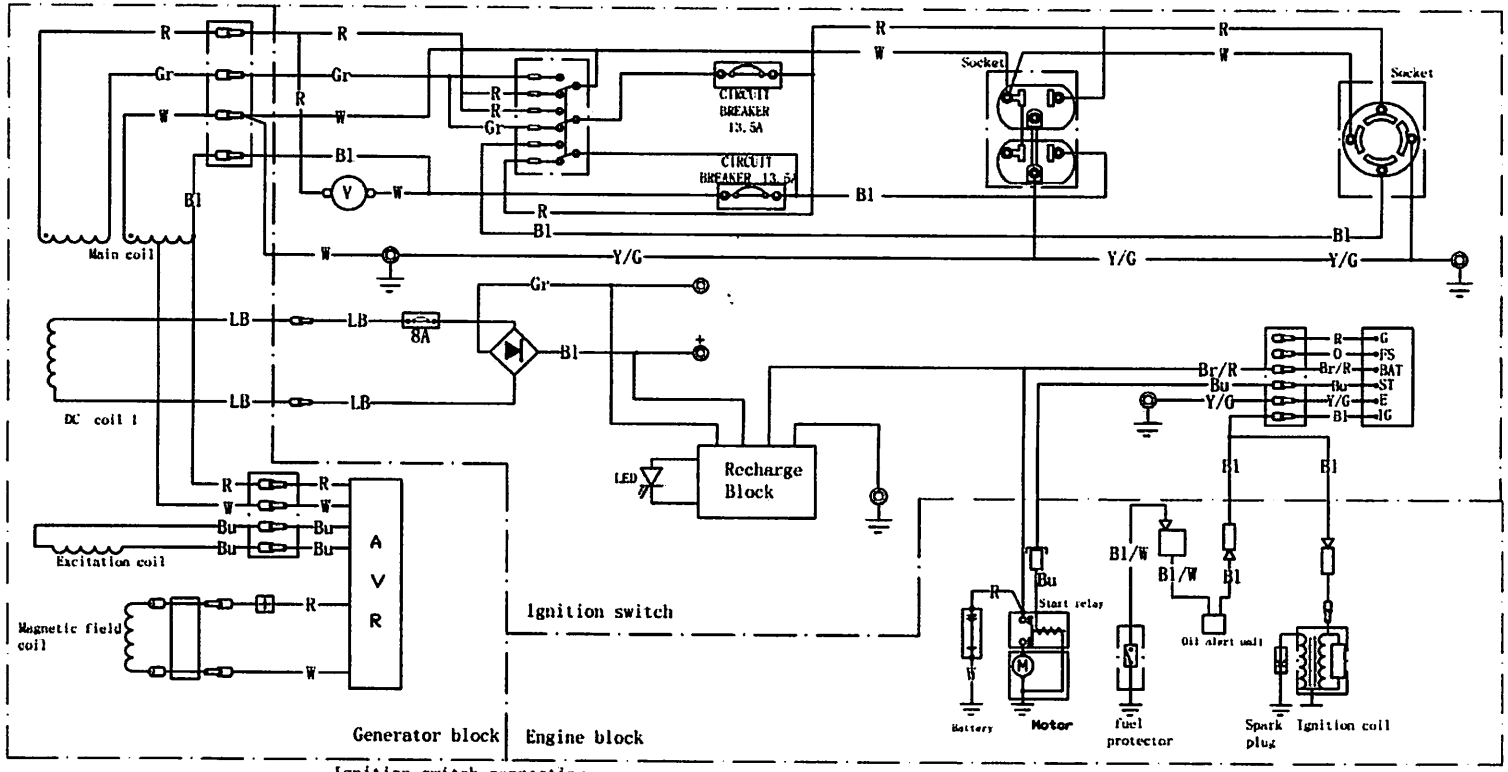

Bl	Black	Br	Brown
O	Orange	Br/R	Brown/Red
Bu	Blue	LB	Light blue
Gr	Gray	Y/G	Yellow/Green
R	Red	W	White

	IG	E	BAT	ST	FS	G
OFF	o—o				o—o	
ON						
Start			o—o			

WIRING DIAGRAM OF 120V/240V GENERATOR SET

Engine Parts

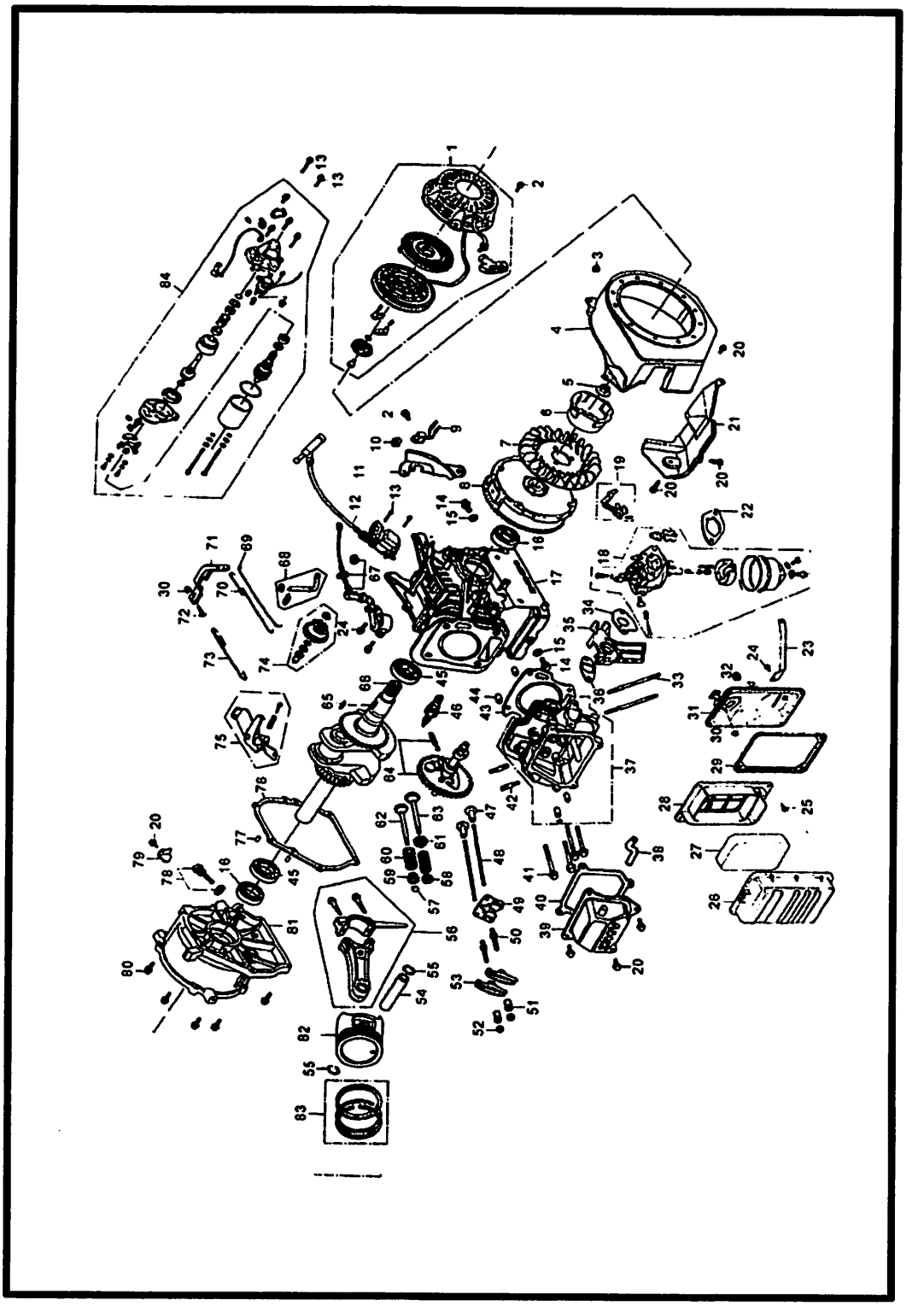

Part #	Description	Qty	Item #	Cross-Reference
1	Recoil Starter (Complete)	1	XP4400EH-1	DJ168F-16121-K
2	Flange Bolt (M6x8)	4	XP4400EH-2	GBT5787-B6-8
3	Grommet, Drain Hole	1	XP4400EH-3	DJ168F-16118
4	Flywheel Fan Cover (Comp)	1	XP4400EH-4	DJ170N-16121-A
5	Flange Nut (M14)	1	XP4400EH-5	GBT6177/10-N-14
6	Starter Pulley	1	XP4400EH-6	DJ168F-16000-A
7	Flywheel Fan Cover (Comp)	1	XP4400EH-7	DJ168F-16002-A
8	Flywheel	1	XP4400EH-8	DJ168F-16200-I
9	Low Oil Switch	1	XP4400EH-9	DJ168F-18300-A
10	Low Oil Switch Clip	1	XP4400EH-10	XP4400EH-10
11	Side Plate	1	XP4400EH-11	DJ170S-11400-A
12	Ignition Coil Assy	1	XP4400EH-12	DJ168F-18100-C
13	Flange Bolt (M6x25)	2	XP4400EH-13	GBT5787-B6-25
14	Drain Lug Bolt	2	XP4400EH-14	DJ168F-11004-A
15	Drain Lug Washer	2	XP4400EH-15	DJ168F-11005-A
16	Oil Seal (25x41x6)	2	XP4400EH-16	DJ168F-11014-A
17	Crankcase Assy	1	XP4400EH-17	DJ170F-11100-C
18	LPG/Gasoline Carburetor Assy	1	XP4400EH-18	DJ170FD-14100-C
19	Carburetor Choke Lever	1	XP4400EH-19	DJ168F-14119
20	Flange Bolt (M6x12)	11	XP4400EH-20	GBT5787-B6-16
21	Shroud Complete	1	XP4400EH-21	DJ168F-11012-A
22	Gasket, Carb to Air	1	XP4400EH-22	DJ168F-14027-A
23	Air Cleaner Bracket	1	XP4400EH-23	DF2500H-14205-A
24	Flange Bolt (M6x12)	3	XP4400EH-24	GBT5787-B6-12
25	Bolt (M5x12)	4	XP4400EH-25	GBT5787-B5-14
26	Air Cleaner Cover	1	XP4400EH-26	DJ168F-14204
27	Air Cleaner Element	1	XP4400EH-27	DJ170F-14201
28	Air Cleaner Element Holder	1	XP4400EH-28	DJ168F-14202
29	Air Cleaner Seal	1	XP4400EH-29	DJ168F-14206
30	Flange Nut (M6)	2	XP4400EH-30	GBT6177-N-6
31	Air Cleaner Case (Comp)	1	XP4400EH-31	DJ168F-14205-A
32	Grommet, Fender	1	XP4400EH-32	DJ168F-14014-A
33	Guide Bolt (M6x94)	2	XP4400EH-33	DJ168FD-14001-A
34	Carburetor Gasket	1	XP4400EH-34	DJ168F-14005-A
35	Carburetor Heat Isolator	1	XP4400EH-35	DJ168F-14004-A
36	Carburetor Heat Isolator Gasket	1	XP4400EH-36	DJ168F-14003-B
37	Cylinder Head (Comp)	1	XP4400EH-37	DJ170F-11200-B
38	Cylinder Head Breather	1	XP4400EH-38	DJ168FD-11013-A
39	Cylinder Head Cover (Comp)	1	XP4400EH-39	DJ168F-11300-C
40	Cylinder Head Cover Gasket	1	XP4400EH-40	DJ168F-11011-A
41	Flange Bolt (M8x60)	4	XP4400EH-41	GBT5787-B8-60
42	Guide Bolt (M8x32)	2	XP4400EH-42	DJ168F-14002-A

Part #	Description	Qty	Item #	Cross-Reference
43	Cylinder Head Gasket	1	XP4400EH-43	DJ170F-11010-C
44	Cylinder Head Bolt Guide	2	XP4400EH-44	DJ168F-11009-A
45	Radial Ball Bearing (6025)	2	XP4400EH-45	GB276-89-6205
46	Spark Plug	1	XP4400EH-46	DJ168F-18500-A
47	Valve Tappet	2	XP4400EH-47	DJ170F-13009-A
48	Push Rod	2	XP4400EH-48	DJ170F-13008-A
49	Push Rod Guide Plate	1	XP4400EH-49	DJ168F-13300-A
50	Rocker Arm Pivot Bolt	2	XP4400EH-50	DJ168F-13202-A
51	Rocker Arm Nut	2	XP4400EH-51	DJ168F-13203-A
52	Rocker Arm Pivot Bolt Nut	2	XP4400EH-52	DJ168F-13204-A
53	Rocker Arm	2	XP4400EH-53	DJ168F-13201-A
54	Piston Pin	1	XP4400EH-54	DJ170F-12002-A
55	Piston Pin Clip	2	XP4400EH-55	DJ168F-12003-A
56	Connecting Rod	1	XP4400EH-56	DJ170F-12200-B
57	Valve Cap	1	XP4400EH-57	DJ168F-13006-A
58	Intake Valve Spring Retainer	1	XP4400EH-58	DJ168F-13004-A
59	Exhaust Valve Spring Retainer	1	XP4400EH-59	DJ168F-13005-A
60	Valve Spring	2	XP4400EH-60	DJ168F-13003-A
61	Valve Spring Seat	1	XP4400EH-61	DJ168F-13010-A
62	Exhaust Valve	1	XP4400EH-62	DJ168F-13001-A
63	Intake Valve	1	XP4400EH-63	DJ168F-13002-A
64	Camshaft	1	XP4400EH-64	DJ168F-13100-B
65	Crankshaft Key (25x18)	1	XP4400EH-65	DJ168F-12104
66	Crankshaft	1	XP4400EH-66	DJ168F-12100-BB
67	Low Oil Sensor	1	XP4400EH-67	DJ168F-18200-A
68	Governor Shaft	1	XP4400EH-68	DJ168F-15001-A
69	Governor Arm Rod	1	XP4400EH-69	DJ168F-15006-A
70	Throttle Return Spring	1	XP4400EH-70	DJ170F-15008-A
71	Governor Arm	1	XP4400EH-71	DJ168F-15004-A
72	Governor Arm Bolt	1	XP4400EH-72	DJ168F-15005-A
73	Governor Spring	1	XP4400EH-73	DJ170F-15007-A
74	Governor Assembly (Comp)	1	XP4400EH-74	DJ168F-15100-A
75	Throttle Stop Assy	1	XP4400EH-75	DJ168FD-15200-A
76	Crankcase Cover Gasket	1	XP4400EH-76	DJ170F-11003-B
77	Crankcase Bolt Guide (8x14)	2	XP4400EH-77	DJ168F-11002-F
78	Oil Fill Cap	1	XP4400EH-78	DJ168F-11007-A
79	Plate	1	XP4400EH-79	DF1800H-33016-A
80	Flange Bolt (M8x32)	6	XP4400EH-80	GBT5787-B8-35
81	Crankcase Cover	1	XP4400EH-81	DJ168FD-11001-C
82	Piston	1	XP4400EH-82	DJ170F-12001-B
83	Piston Ring Set	1	XP4400EH-83	DJ170F-12300-A
84	Starter Motor	1	XP4400EH-84	DJ168F-18600-A

Other Generator Parts

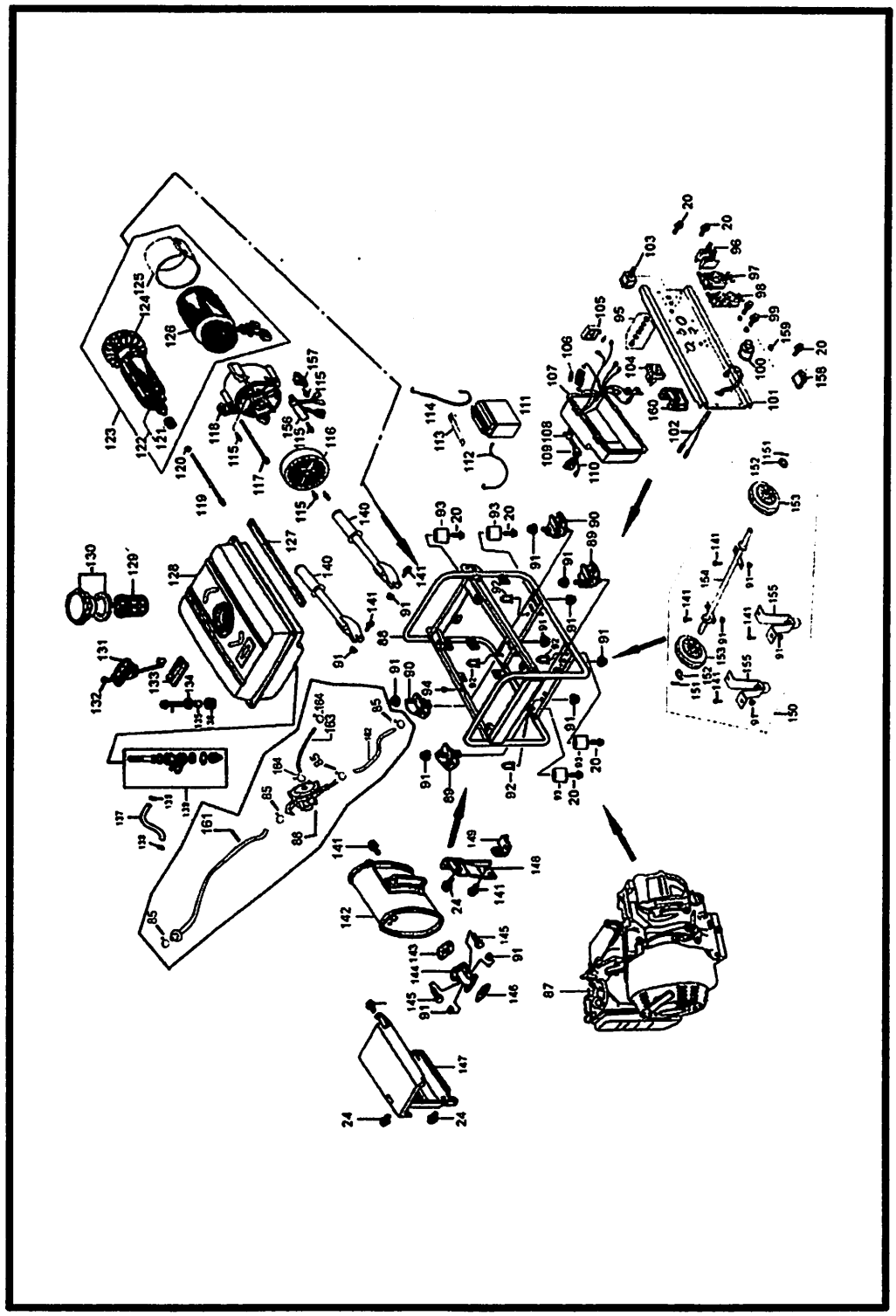

Other Generator Parts

Part #	Description	Qty	Item #	Cross-Reference
85	Clip, Tube	4	XP4400EH-85	XP4400EH-85
86	Propane Regulator / Release Valve	1	XP4400EH-86	XP4400EH-86
87	Gasoline Engine Complete	1	XP4400EH-87	DJ170FD-BD
88	Generator Frame Complete	1	XP4400EH-88	XP4400E-31100-BK
89	Vibration Mount A	2	XP4400EH-89	DF2500H-31201-A
90	Vibration Mount B	2	XP4400EH-90	DF2500H-31202-A
91	Flange Nut (M8)	18	XP4400EH-91	GBT6177-N-8
92	Flange Nut (M6)	4	XP4400EH-92	GBT889-N-8
93	Rubber Foot, Frame	4	XP4400EH-93	XP4400EH-93
94	Fuel Tank Rubber Pad	2	XP4400EH-94	DF2500H-14304-A
95	Earth Terminal (Complete)	1	XP4400EH-95	34107
96	Circuit Breaker (15A 240v)	1	XP4400EH-96	34206-100
97	Receptacle (30A)	1	XP4400EH-97	34204-003
98	Receptacle (20A, Duplex)	2	XP4400EH-98	34204-005
99	DC Output Post (Set)	2	XP4400EH-99	34204-038
100	Engine Switch (Key)	1	XP4400EH-100	34203-002
101	Control Panel Face, Metal Only	1	XP4400EH-101	**SEE REF #
102	Sub-Wiring Harness	1	XP4400EH-102	634213-002
103	Voltage Selection Switch	1	XP4400EH-103	34202-006
104	Voltmeter	1	XP4400EH-104	34205-001
105	Diode Assy	1	XP4400EH-105	34210-001
106	Fuse	1	XP4400EH-106	XP4400EH-106
107	Control Panel Rear Cover	1	XP4400EH-107	34102-A
108	Rubber Boot, Main Wiring Harness	1	XP4400EH-108	34109
109	Rubber Boot, Generator AC Out	1	XP4400EH-109	34117
110	Main Wiring Harness	1	XP4400EH-110	34212-001
111	Battery (7ah 12v DC)	1	XP4400EH-111	31300-001
112	Positive Battery Cable	1	XP4400EH-112	31038-001
113	Battery Support Bar	1	XP4400EH-113	DF1800H-31033-A
114	Negative Battery Cable	1	XP4400EH-114	31040-001
115	Flange Bolt (M5x12)	2	XP4400EH-115	GBT5789-B5-16
116	Generator End Cover	1	XP4400EH-116	DF1800H-33006-B
117	Flange Bolt (M6x125)	4	XP4400EH-117	DF3500H-33015-A
118	Generator End Support	1	XP4400EH-118	DF1800H-33005-A
119	Bolt (M8x180)	1	XP4400EH-119	DF3500H-33003-A
120	Plain Washer (10)	1	XP4400EH-120	GBT93-LW-8
121	Bearing 6204-2RS	1	XP4400EH-121	GB276-89-6204
122	Rotor (Comp)	1	XP4400EH-122	DF3500H-33110-B
123	Stator and Rotor (Comp)	1	XP4400EH-123	DF3000H33103-B-23602
124	Generator Fan	1	XP4400EH-124	DF2500H-33023

Part #	Description	Qty	Item #	Cross-Reference
125	Stator Cover	1	XP4400EH-125	DF3500H-33129
126	Stator (Comp)	1	XP4400EH-126	DF3500H-33120
127	Fuel Tank Rubber Pad	1	XP4400EH-127	DF2500H-14322-D
128	Fuel Tank	1	XP4400EH-128	DF2500H-14300-B
129	Fuel Tank Filter Cup	1	XP4400EH-129	14307
130	Fuel Tank Cap	1	XP4400EH-130	14306
131	Fuel Tank Sensor (Complete)	1	XP4400EH-131	14303
132	Screw (M5x10)	2	XP4400EH-132	GBT819-B-5
133	Fuel Tank Sensor Gasket	1	XP4400EH-133	14313
134	Washer	4	XP4400EH-134	14311
135	Collar	4	XP4400EH-135	14305
136	Cushion	4	XP4400EH-136	14304
137	Gas Tube (4.5x165)	1	XP4400EH-137	DF168FD-14007-C
138	Tube Clip	2	XP4400EH-138	DJ168F-14008-A
139	Fuel Valve	1	XP4400EH-139	DF2500H-14302-A
140	Handles	2	XP4400EH-140	DF3800H-31058-C
141	Flange Bolt (M8x16)	17	XP4400EH-141	GBT889-N-8X20
142	Muffler	1	XP4400EH-142	DH2500H-14400-E
143	Muffler Gasket	1	XP4400EH-143	DJ168F-14006-A
144	Exhaust Pipe	1	XP4400EH-144	DF2500H-14009
145	Flange Bolt (M8x25)	2	XP4400EH-145	GB5787-B-6
146	Exhaust Pipe Gasket	1	XP4400EH-146	DJ188F-14010-A
147	Muffler Heat Shield	1	XP4400EH-147	DF2500H-14018-B
148	Muffler Bracket	1	XP4400EH-148	XP4400E-148
149	Muffler Bracket Plate	1	XP4400EH-149	XP4400E-149
150	Wheel Kit (Assy)	1	XP4400EH-150	XP4400E-WK
151	Wheel Retaining Pin	2	XP4400EH-151	DF2500H-31019-B
153	Wheel, Semi-Solid 8"	2	XP4400EH-153	31017-F
154	Wheel Shaft	1	XP4400EH-154	DF3000H-31018-F
155	Wheel Shaft Bracket	2	XP4400EH-155	DF3000H-31070-E
156	Voltage Regulator	1	XP4400EH-156	DF2500H-33011-A
157	Brush (Assy)	1	XP4400EH-157	DF3500H-33001
158	Circuit Protector (10A, DC)	1	XP4400EH-158	34208-004
159	Recharge Indicator LED	1	XP4400EH-159	XP4400E-159
160	12V DC Regulator	1	XP4400EH-160	34224-001
161	Propane Hose w/ Collar	1	XP4400EH-161	XP4400E-161
162	Propane Hose to Carburetor A	1	XP4400EH-162	XP4400E-162
163	Propane Hose to Carburetor B	1	XP4400EH-163	XP4400E-163
164	Propane Hose Clip (8)	2	XP4400EH-164	XP4400E-164

DuroMax
NEXT GENERATION POWER SYSTEMS

DUAL FUEL

Rugged. Durable. Dependable. Power When You Need It!

Recreation

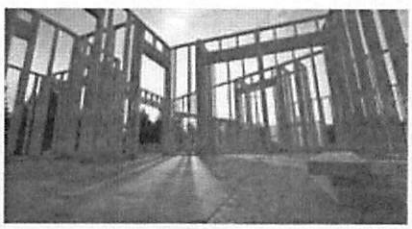
Construction

Portable Power

Ice Storms

Hurricanes

Electrical Storms

Product Support	Product Information, Application, Service Info & Warranty Questions
Please email us at support@duromaxgenerators.com or call (800) 629-3325 Monday – Friday 6:00 am – 6:00 pm (PST)	

EXHIBIT J

1 of 36

Document properties

Description

File name:	XP4400EH_RV42613_.pdf
File size:	3.2 MB
Title:	Not available
Author:	Andrew Miller
Subject:	Not available
Keywords:	Not available
Created on:	6/24/2013, 10:20:19 AM
Modified on:	8/23/2013, 8:49:49 AM
Creator:	Microsoft® Word 2010

Advanced

PDF producer:	Microsoft® Word 2010
PDF version:	1.5
Location:	https://www.absolutegenerators.com/m...
Page count:	36
Page size:	11.33 × 14.67 in (portrait)
Fast web view:	Yes

Close

DUAL HYBRID XP4400EH
★★★★★ ELITE

OWNERS MANUAL

Product Support	Product Information, Application, Service Info & Warranty Questions

Please email us at support@duromaxgenerators.com
or call (800) 629-3325 Monday – Friday 6:00 am – 6:00 pm (PST)