US009137063B2

(12) **United States Patent**
Zerbe et al.

(10) **Patent No.: US 9,137,063 B2**
(45) **Date of Patent: Sep. 15, 2015**

(54) **HIGH-SPEED SIGNALING SYSTEMS WITH ADAPTABLE PRE-EMPHASIS AND EQUALIZATION**

(75) Inventors: **Jared L. Zerbe**, Woodside, CA (US); **Fred F. Chen**, Cambridge, MA (US); **Andrew Ho**, Mountain View, CA (US); **Ramin Farjad-Rad**, Mountain View, CA (US); **John W. Poulton**, Chapel Hill, NC (US); **Kevin S. Donnelly**, Los Altos, CA (US); **Brian Leibowitz**, San Francisco, CA (US)

(73) Assignee: **Rambus Inc.**, Sunnyvale, CA (US)

(*) Notice: Subject to any disclaimer, the term of this patent is extended or adjusted under 35 U.S.C. 154(b) by 907 days.

(21) Appl. No.: **11/336,045**

(22) Filed: **Jan. 20, 2006**

(65) **Prior Publication Data**

US 2006/0188043 A1 Aug. 24, 2006

Related U.S. Application Data

(60) Provisional application No. 60/645,823, filed on Jan. 20, 2005, provisional application No. 60/686,754, filed on Jun. 1, 2005.

(51) **Int. Cl.**

H03H 7/30	(2006.01)
H03H 7/40	(2006.01)
H03K 5/159	(2006.01)

(Continued)

(52) **U.S. Cl.**

CPC ***H04L 27/01*** (2013.01); ***H04L 1/0026*** (2013.01); ***H04L 7/0337*** (2013.01); ***H04L 25/03057*** (2013.01); ***H04L 25/03343*** (2013.01); ***H04L 25/03885*** (2013.01); ***H04L 25/497*** (2013.01); ***H04W 52/20*** (2013.01); *H04L 7/0025* (2013.01); *H04L 7/0087* (2013.01); *H04L 25/028* (2013.01); *H04L 25/0272* (2013.01);

(Continued)

(58) **Field of Classification Search**

CPC H04L 1/0026; H04L 2025/03503; H04L 25/0272

USPC 375/229–233, 259, 295, 316

See application file for complete search history.

(56) **References Cited**

U.S. PATENT DOCUMENTS

4,187,479	A	2/1980	Ishizuka et al.
4,459,698	A	7/1984	Yumoto et al.

(Continued)

FOREIGN PATENT DOCUMENTS

WO	PCT-2005/022750	3/2005

OTHER PUBLICATIONS

Zerbe et al Equalization and Clock Recovery for a 2.5-10-Gb/s 2-PAM/4-PAM Backplane Transceiver Cell, IEEE Journal of Solid-State Circuits, vol. 38, No. 12, Dec. 2003.*

(Continued)

Primary Examiner — Freshteh N Aghdam

(74) *Attorney, Agent, or Firm* — Lance Kreisman; Peninsula Patent Group

(57) **ABSTRACT**

A signaling system includes a pre-emphasizing transmitter and an equalizing receiver coupled to one another via a high-speed signal path. The receiver measures the quality of data conveyed from the transmitter. A controller uses this information and other information to adaptively establish appropriate transmit pre-emphasis and receive equalization settings, e.g. to select the lowest power setting for which the signaling system provides some minimum communication bandwidth without exceeding a desired bit-error rate.

21 Claims, 24 Drawing Sheets

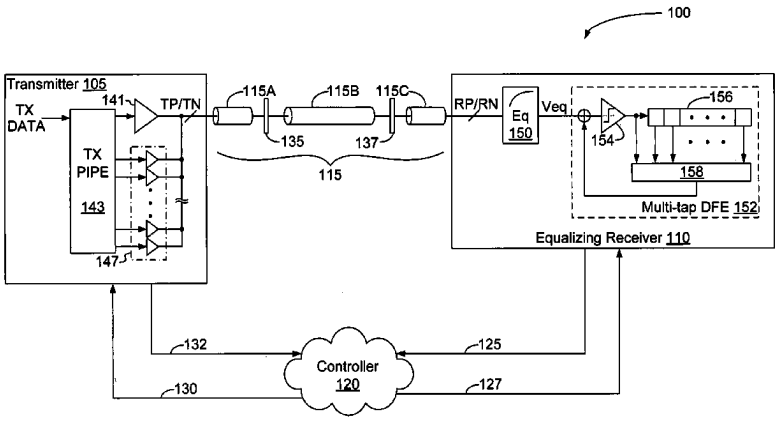

Volex Exhibit 1018
Volex v. Credo

(51) **Int. Cl.**

H04L 27/01	(2006.01)
H04L 1/00	(2006.01)
H04L 7/033	(2006.01)
H04L 25/03	(2006.01)
H04L 25/497	(2006.01)
H04W 52/20	(2009.01)
H04L 7/00	(2006.01)
H04L 25/02	(2006.01)
H04W 52/22	(2009.01)

(52) **U.S. Cl.**

CPC ... *H04L 2025/03503* (2013.01); *H04W 52/225* (2013.01); *Y02B 60/50* (2013.01)

(56) **References Cited**

U.S. PATENT DOCUMENTS

4,639,681	A	1/1987	Hasegawa	
4,985,900	A	1/1991	Rhind et al.	
5,097,482	A	3/1992	Serizawa et al.	
5,293,405	A	3/1994	Gersbach et al.	
5,402,012	A	3/1995	Thomas	
5,654,986	A	8/1997	Lim	
5,682,112	A	10/1997	Fukushima	
5,764,695	A	6/1998	Nagaraj et al.	
5,844,431	A	12/1998	Chen	
5,991,339	A	11/1999	Bazes et al.	
5,999,056	A	12/1999	Fong	
6,028,901	A *	2/2000	Huynh et al.	375/350
6,192,071	B1	2/2001	Hirth et al.	
6,222,592	B1	4/2001	Patel	
6,225,795	B1	5/2001	Stratakos et al.	
6,265,911	B1	7/2001	Nairn	
6,266,379	B1	7/2001	Dally	
6,329,874	B1	12/2001	Ye et al.	
6,429,692	B1	8/2002	Chan et al.	
6,496,911	B1	12/2002	Dixon et al.	
6,542,555	B2	4/2003	Dally	
6,570,916	B1	5/2003	Feldbaumer et al.	
6,624,688	B2	9/2003	Jaussi et al.	
6,680,681	B1	1/2004	Hsu et al.	
6,687,841	B1	2/2004	Marukawa	
6,731,683	B1	5/2004	Fiedler et al.	
6,741,644	B1 *	5/2004	Dehghan et al.	375/229
6,751,255	B1 *	6/2004	Reuven et al.	375/233
6,812,872	B1	11/2004	Lu	
6,992,855	B2	1/2006	Ehrlich	
7,030,657	B2	4/2006	Stojanovic et al.	
7,092,472	B2	8/2006	Stojanovic	
7,099,404	B2	8/2006	Dally	
7,126,378	B2	10/2006	Stojanovic et al.	
7,176,721	B2	2/2007	Ho et al.	
7,233,164	B2	6/2007	Stojanovic et al.	
7,286,597	B2	10/2007	Buchwald et al.	
7,397,848	B2	7/2008	Stojanovic et al.	
7,400,675	B2	7/2008	Moughabghab et al.	
7,411,840	B2	8/2008	Gaskins et al.	
7,443,910	B2 *	10/2008	Agazzi	375/219
7,446,622	B2	11/2008	Chiang	
7,496,161	B2	2/2009	Chou et al.	
7,535,980	B2 *	5/2009	Yang et al.	375/350
7,715,471	B2	5/2010	Werner et al.	
2001/0024477	A1 *	9/2001	Haycock	375/296
2001/0055335	A1	12/2001	Agazzi et al.	
2002/0009167	A1	1/2002	Farjad-Rad	
2002/0061012	A1 *	5/2002	Thi et al.	370/352
2002/0094043	A1	7/2002	Chu et al.	
2003/0035495	A1 *	2/2003	Laamanen et al.	375/296
2003/0123572	A1	7/2003	Samueli et al.	
2003/0165191	A1	9/2003	Kokuryo et al.	
2003/0223489	A1	12/2003	Smee et al.	
2003/0223505	A1 *	12/2003	Verbin et al.	375/261
2004/0005001	A1	1/2004	Jones et al.	
2004/0008059	A1	1/2004	Chen et al.	
2004/0022311	A1 *	2/2004	Zerbe et al.	375/229
2004/0052309	A1	3/2004	Li	
2004/0057513	A1 *	3/2004	Schenk	375/233
2004/0091028	A1	5/2004	Aronson et al.	
2004/0190661	A1	9/2004	Vrazel	
2004/0203559	A1	10/2004	Stojanovic et al.	
2004/0209635	A1	10/2004	Hsu et al.	
2005/0047500	A1	3/2005	Gupta et al.	
2006/0002462	A1	1/2006	Park	
2006/0008279	A1 *	1/2006	Chiang et al.	398/202
2006/0093028	A1 *	5/2006	Balan et al.	375/233
2007/0147559	A1	6/2007	Lapointe	
2008/0048730	A1	2/2008	Bae	
2008/0107165	A1	5/2008	Nicolescu et al.	
2008/0198915	A1 *	8/2008	Gorecki	375/232
2008/0247452	A1	10/2008	Lee	
2008/0260016	A1 *	10/2008	Lapointe et al.	375/233
2010/0008414	A1	1/2010	Lee et al.	
2010/0027606	A1	2/2010	Dai et al.	

OTHER PUBLICATIONS

Roth, Jitter and Cross-talk Effects Using Infiniband Cables and their Implication on Equalization Technologies, Dec. 2002.*

Granberg, Tom, "Handbook of Digital Techniques for High-Speed Design." Prentice Hall Modern Semiconductor Design Series, copyright 2004. Pgs. cover, copyright, 211-226.

Kudoh, Yoshiharu et al., "A 0.13-um CMOS 5-Gb/s 10-m 28AWG Cable Transceiver with No-Feedback-Loop Continuous-Time Post-Equalizer." IEEE Journal of Solid-State Circuits, vol. 38, No. 5 , May 2003. pp. 741-746.

Shakiba, Mohammad Hossein, "A 2.5Gb/s Adaptive Cable Equalizer." ISSCC99/Session 23/Paper WP 23.3. 1999. pp. 396 and 397.

Baker, Alan J., "An Adaptive Cable Equalizer for Serial Digital Video Rates to 400Mb/s." ISSCC96/Session 10/Low-Power & Communication Signal Processing/Paper FA 10.7. pp. 174-175.

Farjad-Rad, Ramin et al., "0.622-8.0Gbps 150m W Serial IO Macrocell with Fully Flexible Preemphasis and Equalization." 2003 Symposium on VLSI Circuits Digest of Technical Papers. 4 pages.

Choi, Jong-Sang et al., "A CMOS 3.5Gbps Continuous-time Adaptive Cable Equalizer with Joint Adaptation Method of Low-Frequency Gain and High-Frequency Boostin." 2003 Symposium on VLSI Circuits Digest of Technical Papers. pp. 103-106.

Dessent, Brian, "Fully Dynamic Logic Blocks Using Multiple-Phase Clocks." EE241, Spring 2001, UC Berkeley. pp. 1-11.

Sirisantana, Naran et al., "A Time Borrowing Selectively Clocked Skewed Logic for High-Performance Circuits in Scaled Technologies." School of Electrical and Computer Engineering, Purdue Univ. 2003. 4 pages.

Ciric, Jovana et al., "Delay Minimization and Technology Mapping of Two-Level Structures and Implementation Using Clock-Delayed Domino Logic." Dept. of Electrical Engineering University of Washington. 2000. 6 pages.

Mahmoodi-Meimand, Hamid, "Diode-Footed Domino: A Leakage-Tolerant High Fan-in Dynamic Circuit Design Style." IEEE Transactions on Circuits and Systems-I: Regular Papers, vol. 51, No. 3, Mar. 2004. pp. 495-503.

Bisdounis, Labros, et al., "European Low-Power Initiative for Electronic System Design." Design CMOS Circuits for Low Power. Copyright 2002, Kluwer Academic Publishers. pp. Cover, Copyright and 71-96.

Landman, Paul, et al., "A Transmit Architecture with 4-Tap Feedforward Equalization for 6.25/12.5Gb/s Serial Backplane Communications." 2005 IEEE International Solid-State Circuits Conference. pp. 66-67 and 585.

Landman, Paul, et al., "A Transmit Architecture with 4-Tap Feedforward Equalization for 6.25/12.5Gb/s Serial Backplane Communications." 2005 IEEE International Solid-State Circuits Conference. pp. 40-41 and 508.

Stojanovic, Vladimir et al., "Adaptive Equalization and Data Recovery in a Dual-Mode (PAM2/4) Serial Link Transceiver." Rambus, Inc., Department of Electrical Engineering, Stanford University. 2004. 4 pages.

(56) **References Cited**

OTHER PUBLICATIONS

Laakso, Timo I. (Prof.), "Lecture 8—Nonlinear receivers 1: DFE equalizers." S-38.411 Signal Processing in Telecommunications I, Spring 2000, 13 pages.
Laakso, Timo I. (Prof.), "Lecture 4—Optimal Linear Equalizers for Linear Channels 1." S-38.411 Signal Processing in Telecommunications I, Spring 2000, 12 pages.
Laakso, Timo I. (Prof.), "Lecture 5—Optimal Linear Equalizers for Linear Channels 2." S-38.411 Signal Processing in Telecommunications I, Spring 2000, 14 pages.
Laakso, Timo I. (Prof.), "Lecture 6—Adaptive equalizers 1." S-38.411 Signal Processing in Telecommunications I, Spring 2000, 10 pages.
Laakso, Timo I. (Prof.), "Lecture 7—Adaptive equalizers 2." S-38.411 Signal Processing in Telecommunications I, Spring 2000, 12 pages.
Zerbe, Jared L. et al. "Equalization and Clock Recovery for a 2.5-10-Gb/s 2-PAM/4-PAM Backplane Transceiver Cell." IEEE Journal of Solid-State Circuits, vol. 38, No. 12. Dec. 2003. pp. 2121-2130.
Zerbe, Jared, U.S. Appl. No. 13/216,047 filed Aug. 23, 2011, re Office Action dated Dec. 23, 2011. 10 pages.
Zerbe, Jared, U.S. Appl. No. 13/215,951 filed Aug. 23, 2011, Office Action mailed Mar. 2, 2012. 9 pages.
EP Response dated Mar. 21, 2012 to the Official Communication of Aug. 16, 2011 re EP Application No. 11170420.1, includes new claims (highlighted and clear copy) and new description page. 17 pages.
EP Response dated Apr. 3, 2012 re EP Application No. 11170438.3, includes new claims (highlighted and clear copy) and new description pages. 17 pages.
EP Response dated Apr. 13, 2012 re EP Application No. 11170386.4, include new claims (highlighted amendments and clear copy) and new description pages. 16 pages.
EP Response dated Apr. 13, 2012 re EP Application No. 11170426.8, includes new claims (highlighted and clear copy) and new description page. 24 pages.
Zerbe, Jared, U.S. Appl. No. 13/284,002 filed Oct. 28, 2011, Office Action dated Apr. 26, 2012. 12 pages.
PCI-SIG, "PCI Express Base Specification," Revision 1.0, Apr. 29, 2002. 416 pages.
Serial ATA Workgroup, "Serial ATA: High Speed Serialized AT Attachment," Revsion 1.0a, Jan. 7, 2003. 311 pages.
Serial ATA, "Serial ATA II: Electrical Specification," Revision 1.0, May 26, 2004. 187 pages.
EP Response dated May 24, 2013 re EP Application No. 06718942.3 including new claims (highlighted amendments and clear copy) with new description pages. 35 Pages.
EP Office Communication dated Nov. 14, 2012 re EP Application No. 06718942.3. 7 Pages.
EP Response to the Official Communication of Sep. 13, 2011, dated Apr. 2, 2012 in EP Application No. 11 170 405.2. 17 pages.
Chen et al., "A 1.25Gb/s, 460mW CMOS Transceiver for Serial Data Communication," ISSCC97, Session 15, Serial Data Communications, Paper FP 15.3, pp. 242-243, 465, Feb. 7, 1997. 3 pages.
Dally et al., "Transmitter Equalization for 4-Gbps Signaling," IEEE Micro, vol. 17, No. 1, Jan./Feb. 1997, pp. 48-56. 9 pages.
Madduri, Vansanta, "High Speed Backplanes in Communications Systems." Mar. 2004. 7 pages.
Stojanovic, Vladimir et al. "Transmit Pre-Emphasis for High-Speed Time-Division-Multiplexed Serial Link Transceiver." Submitted to IEEE Symposium on VLSI Circuits, Jun. 2004. 17 pages.
Widmer et al., "Single-Chip 4 x 500-MBd CMOS Transceiver," IEEE Journal of Solid-State Circuits, vol. 31, No. 12, Dec. 1996, pp. 2004-2014. 11 pages.
Zhang, Johnny et al. "White Paper on Transmit Pre-Emphasis and Receive Equalization." Oct. 31, 2002. 8 pages.
EP Examination Report dated Dec. 19, 2014 in EP Application No. 11170386.4. 6 pages.
EP Examination Report dated Dec. 19, 2014 in EP Application No. 11170420.1. 7 pages.
EP Examination Report dated Dec. 19, 2014 in EP Application No. 11170426.8. 7 pages.

* cited by examiner

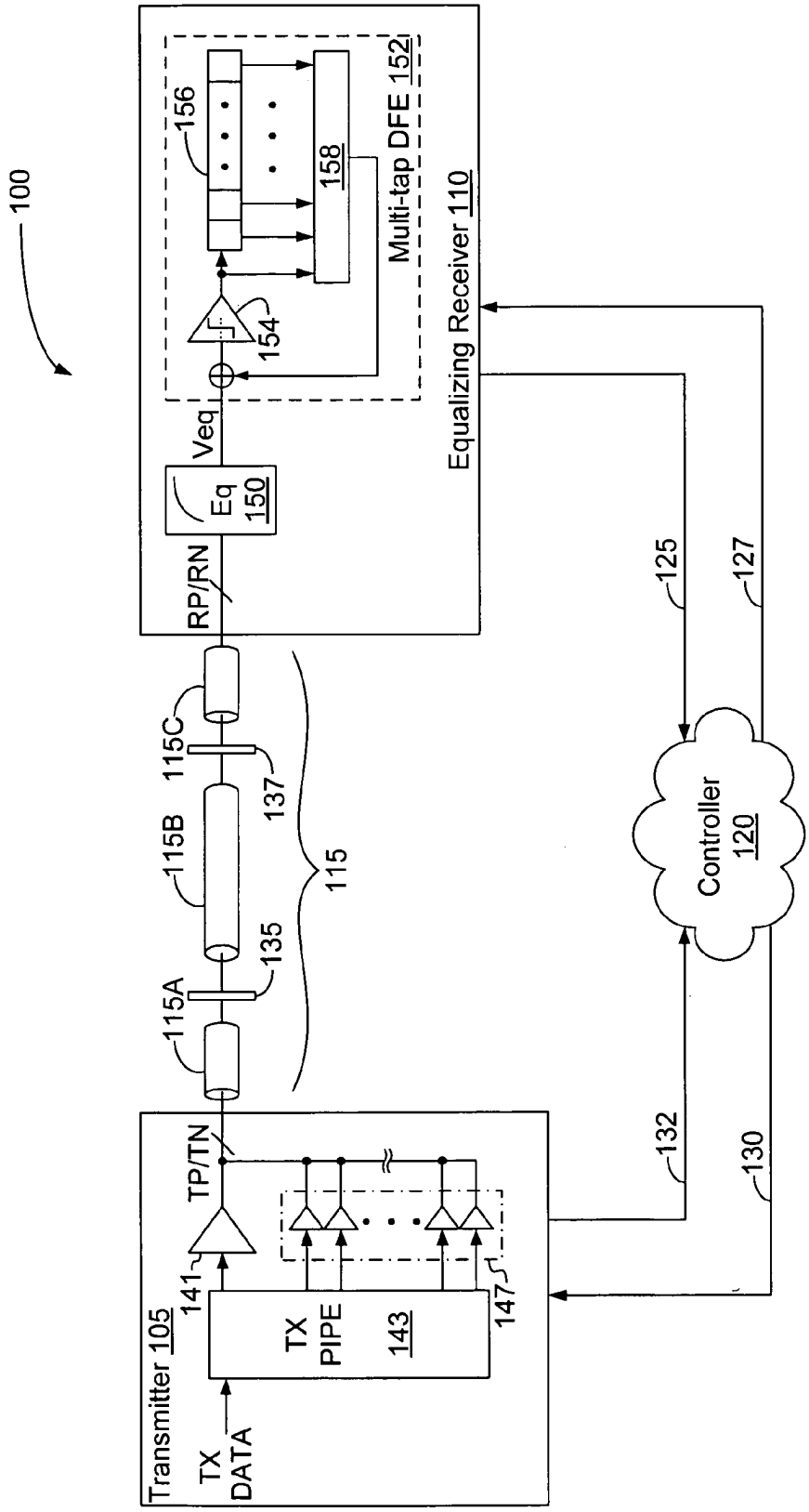
100
Transmitter 105
TX DATA
TX PIPE
143
141
147
TP/TN
115A
135
115B
115C
137
115
RP/RN
Eq 150
Veq
154
156
158
Multi-tap DFE 152
Equalizing Receiver 110
125
127
132
130
Controller 120

FIG. 1

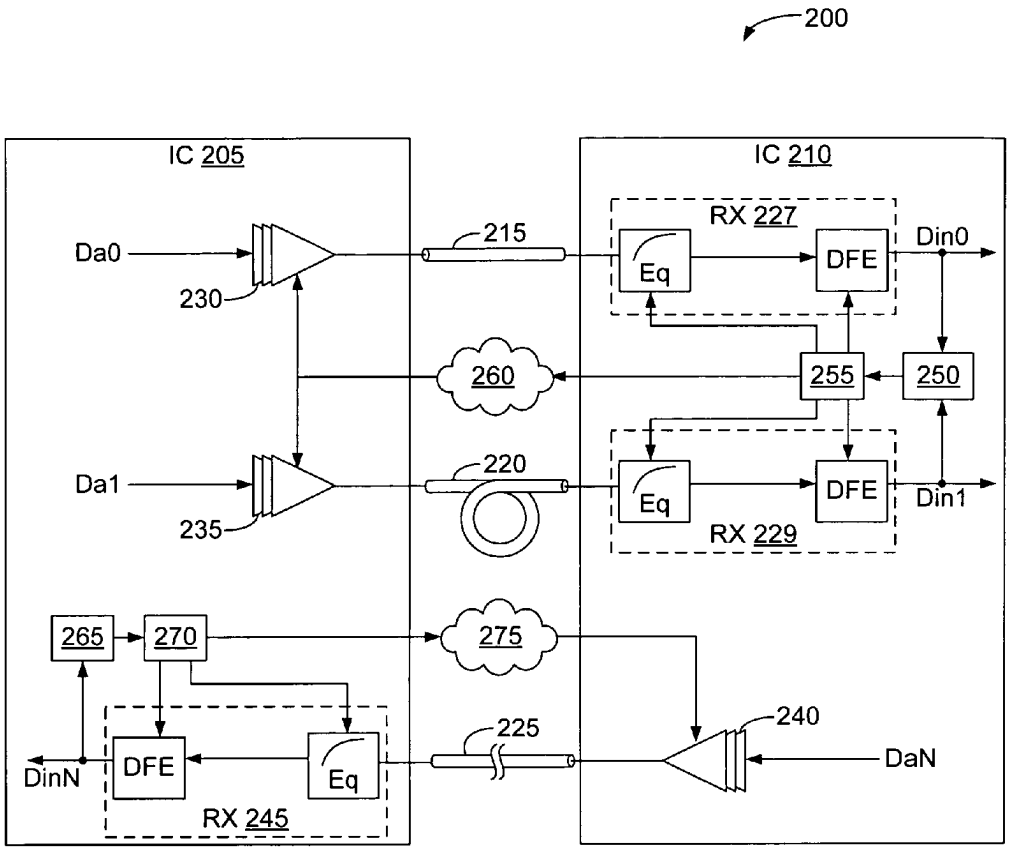
200
IC 205
IC 210
Da0
230
215
RX 227
Eq
DFE
Din0
260
255
250
Da1
235
220
Eq
DFE
Din1
RX 229
265
270
275
240
225
DinN
DFE
Eq
DaN
RX 245

FIG. 2

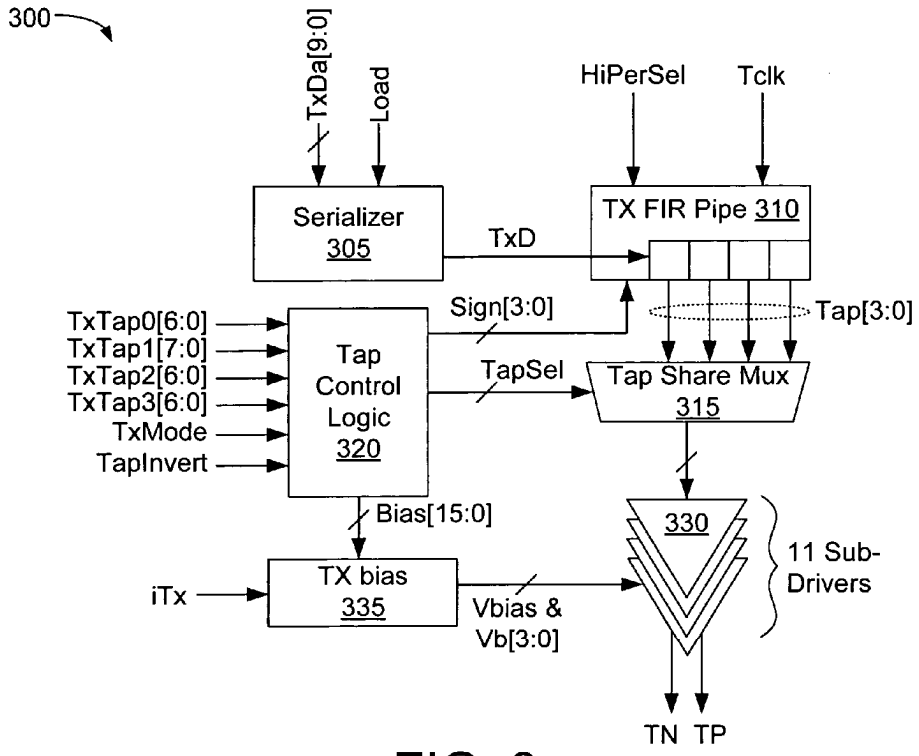
300
TxDa[9:0]
Load
HiPerSel
Tclk
Serializer
305
TxD
TX FIR Pipe 310
Sign[3:0]
Tap[3:0]
TxTap0[6:0]
TxTap1[7:0]
TxTap2[6:0]
TxTap3[6:0]
TxMode
TapInvert
Tap
Control
Logic
320
TapSel
Tap Share Mux
315
Bias[15:0]
330
11 Sub-
Drivers
iTx
TX bias
335
Vbias &
Vb[3:0]
TN TP

FIG. 3

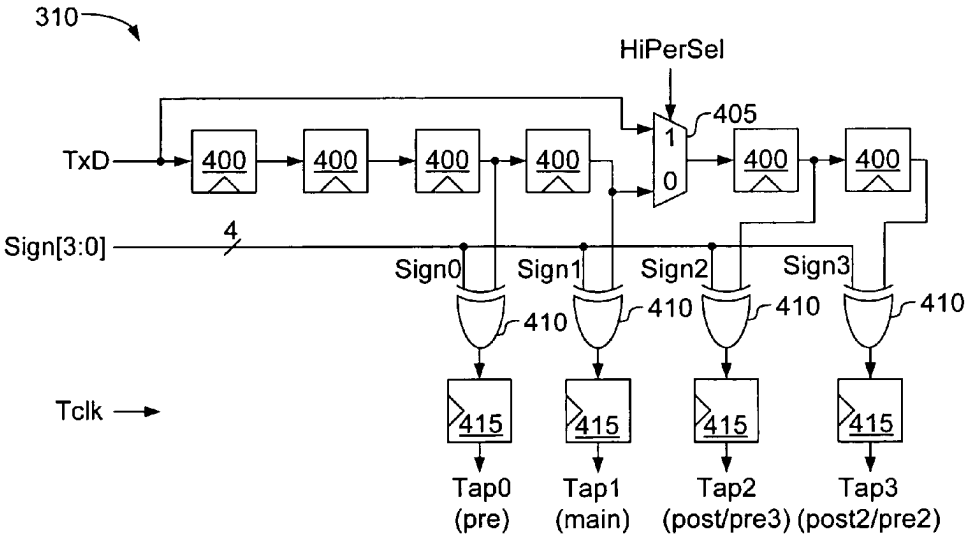
310
HiPerSel
405
TxD
400
400
400
400
1
0
400
400
Sign[3:0]
4
Sign0
Sign1
Sign2
Sign3
410
410
410
410
Tclk
415
415
415
415
Tap0
(pre)
Tap1
(main)
Tap2
(post/pre3)
Tap3
(post2/pre2)

FIG. 4

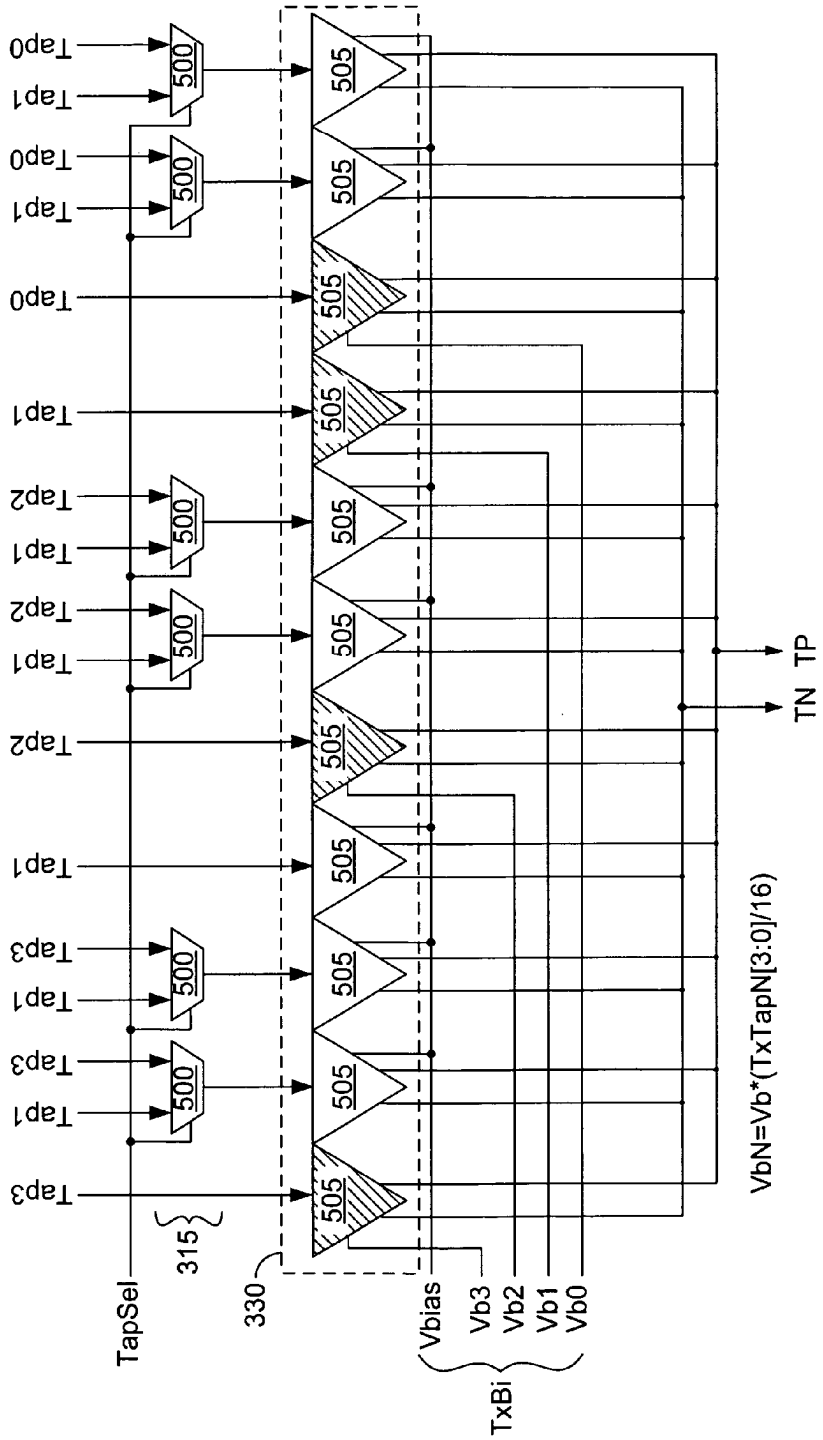
Tap0
Tap1
Tap2
Tap3
500
505
TapSel
315
330
Vbias
Vb3
Vb2
Vb1
Vb0
TxBi
VbN=Vb*(TxTapN[3:0]/16)
TN TP

FIG. 5

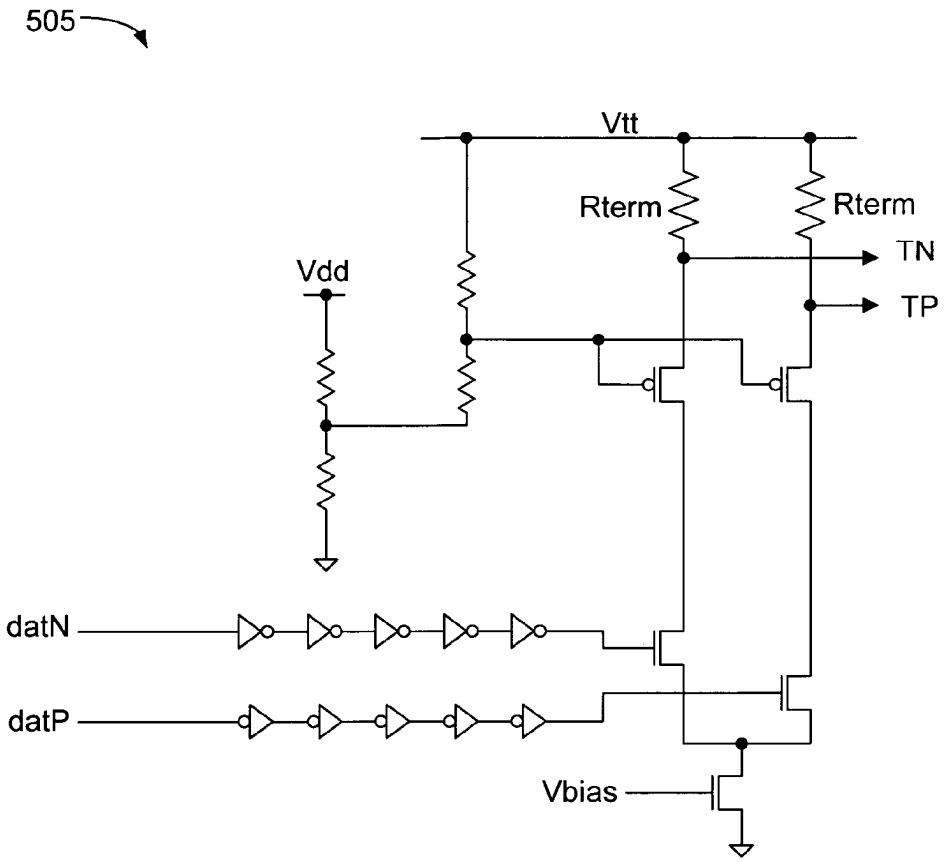
505
Vtt
Rterm
Rterm
TN
TP
Vdd
datN
datP
Vbias

FIG. 6A

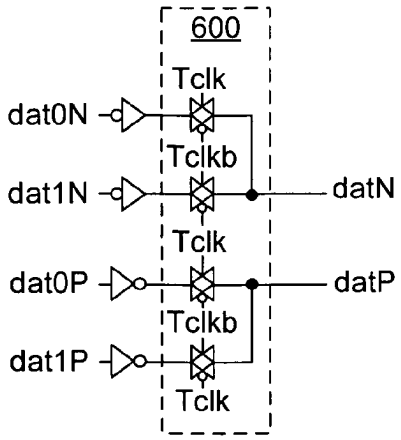
600
Tclk
dat0N
Tclkb
dat1N
datN
Tclk
dat0P
datP
Tclkb
dat1P
Tclk

FIG. 6B

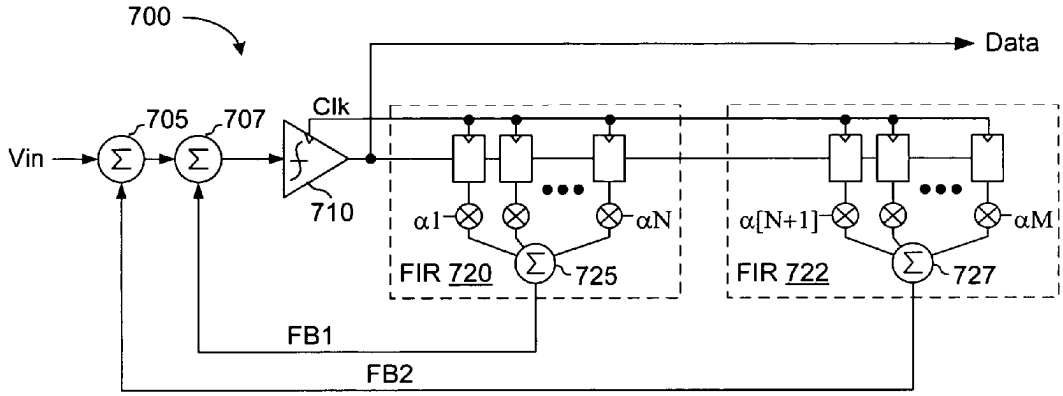
700
Data
Clk
705
707
Vin
710
α1
αN
α[N+1]
αM
FIR 720
725
FIR 722
727
FB1
FB2

FIG. 7

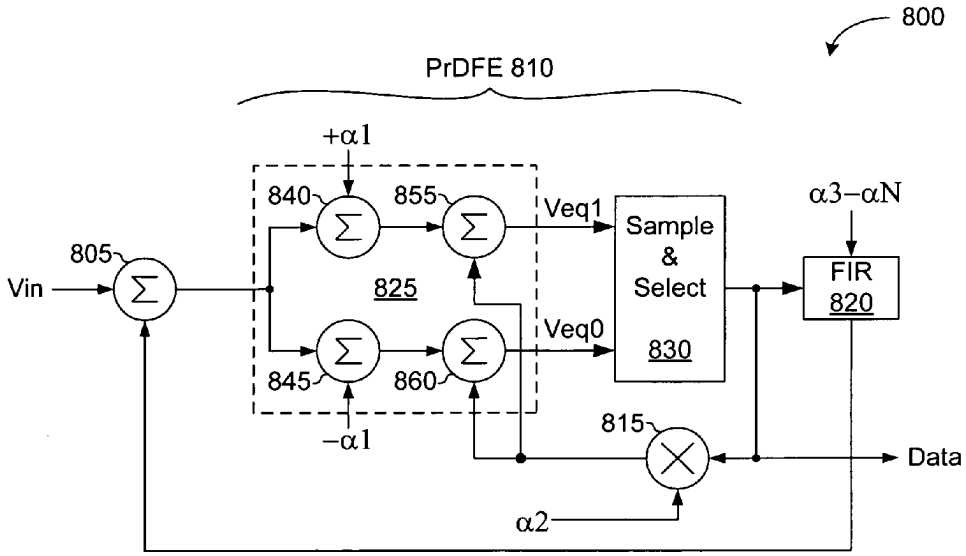
800
PrDFE 810
+α1
840
855
Veq1
Sample & Select
830
α3–αN
805
Vin
825
FIR 820
Veq0
845
860
–α1
815
Data
α2

FIG. 8

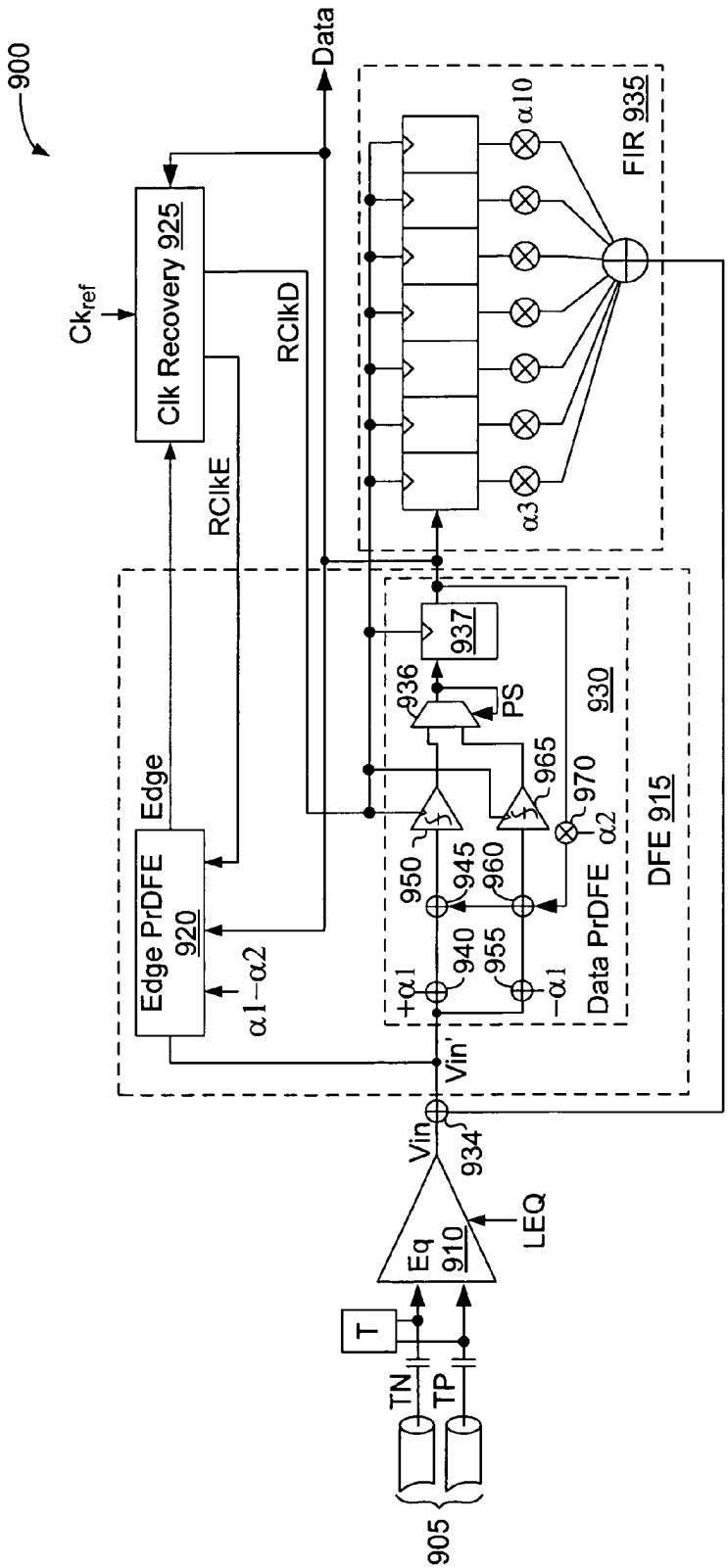
900
Ck_ref
Clk Recovery 925
Data
RClkD
RClkE
Edge
Edge PrDFE 920
α1−α2
FIR 935
α10
α3
937
936
PS
930
965
970
α2
950
945
960
940
955
+α1
−α1
Data PrDFE
DFE 915
Vin'
Vin
934
Eq 910
LEQ
T
TN
TP
905

FIG. 9

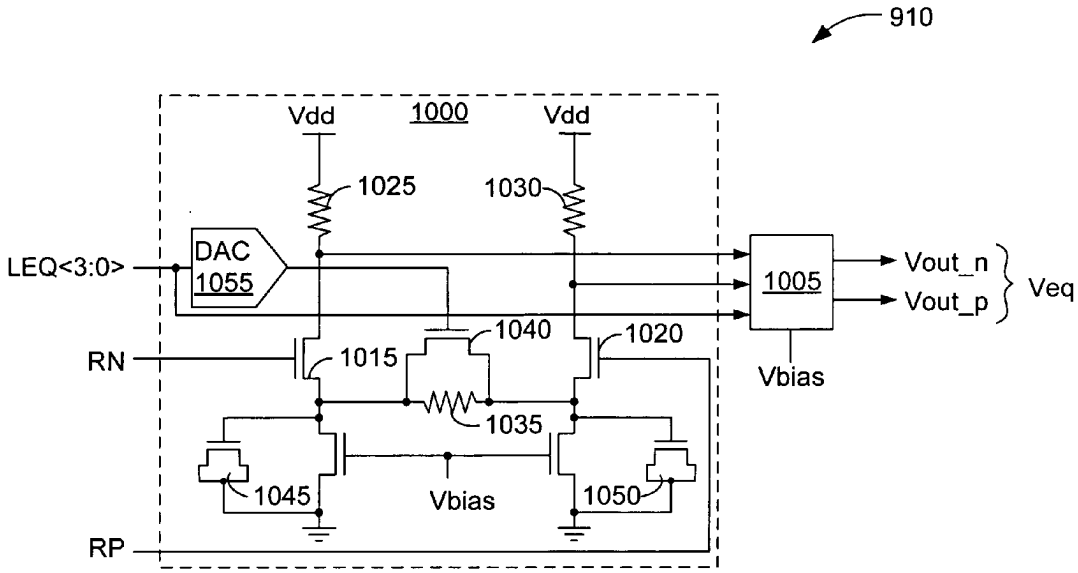
910
1000
Vdd
Vdd
1025
1030
LEQ<3:0>
DAC
1055
1005
Vout_n
Vout_p
Veq
1040
1020
RN
1015
Vbias
1035
1045
Vbias
1050
RP

FIG. 10

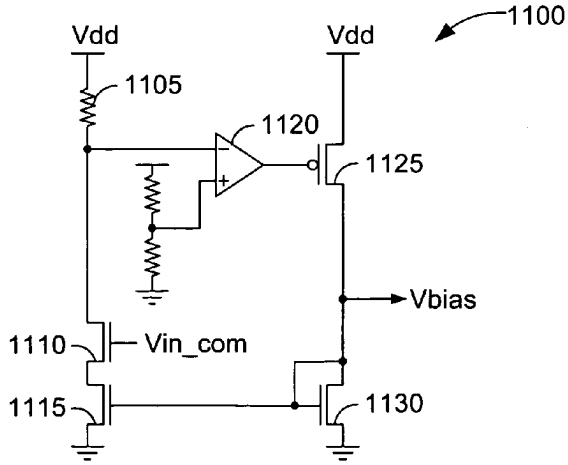
1100
Vdd
Vdd
1105
1120
1125
Vbias
1110
Vin_com
1115
1130

FIG. 11

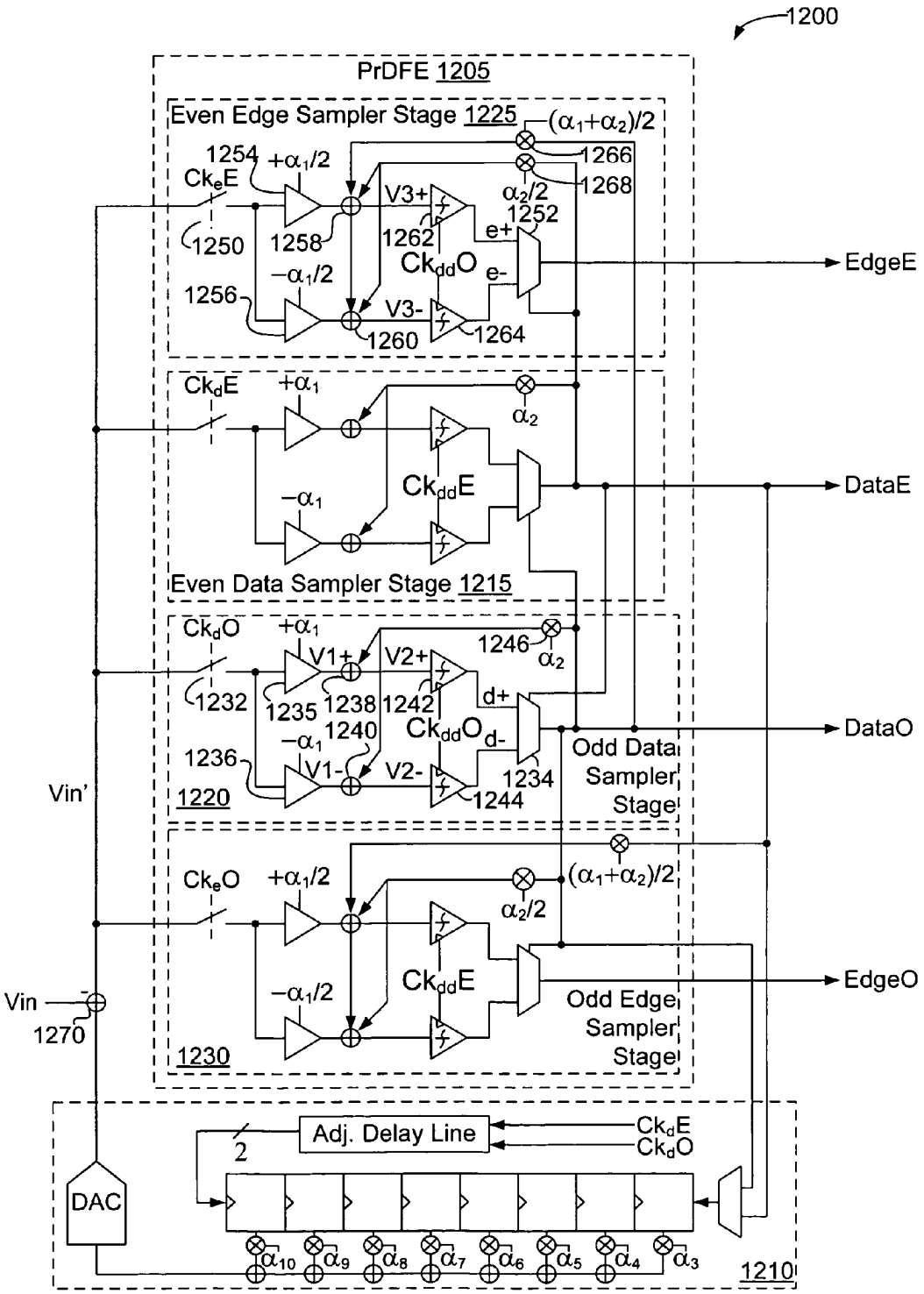
1200
PrDFE 1205
Even Edge Sampler Stage 1225
$(\alpha_1+\alpha_2)/2$
1266
1268
1254
$+\alpha_1/2$
Ck_eE
V3+
$\alpha_2/2$
1252
1250
1258
1262
e+
$Ck_{dd}O$
e-
EdgeE
$-\alpha_1/2$
1256
V3-
1260
1264
Ck_dE
$+\alpha_1$
α_2
$Ck_{dd}E$
DataE
$-\alpha_1$
Even Data Sampler Stage 1215
Ck_dO
$+\alpha_1$
1246
α_2
V1+
V2+
1232
1235
1238
1242
d+
1240
$Ck_{dd}O$
d-
DataO
$-\alpha_1$
1236
V1-
V2-
1234
Odd Data Sampler Stage
Vin'
1220
1244
Ck_eO
$+\alpha_1/2$
$(\alpha_1+\alpha_2)/2$
$\alpha_2/2$
$Ck_{dd}E$
EdgeO
Vin
$-\alpha_1/2$
Odd Edge Sampler Stage
1270
1230
Adj. Delay Line
Ck_dE
Ck_dO
2
DAC
α_{10} α_9 α_8 α_7 α_6 α_5 α_4 α_3
1210

FIG. 12

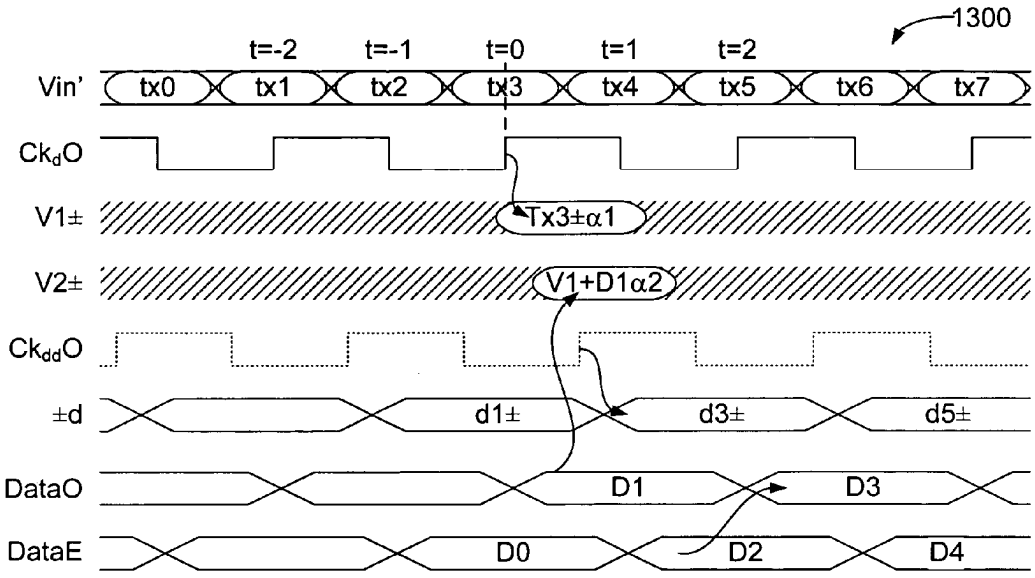

FIG. 13A

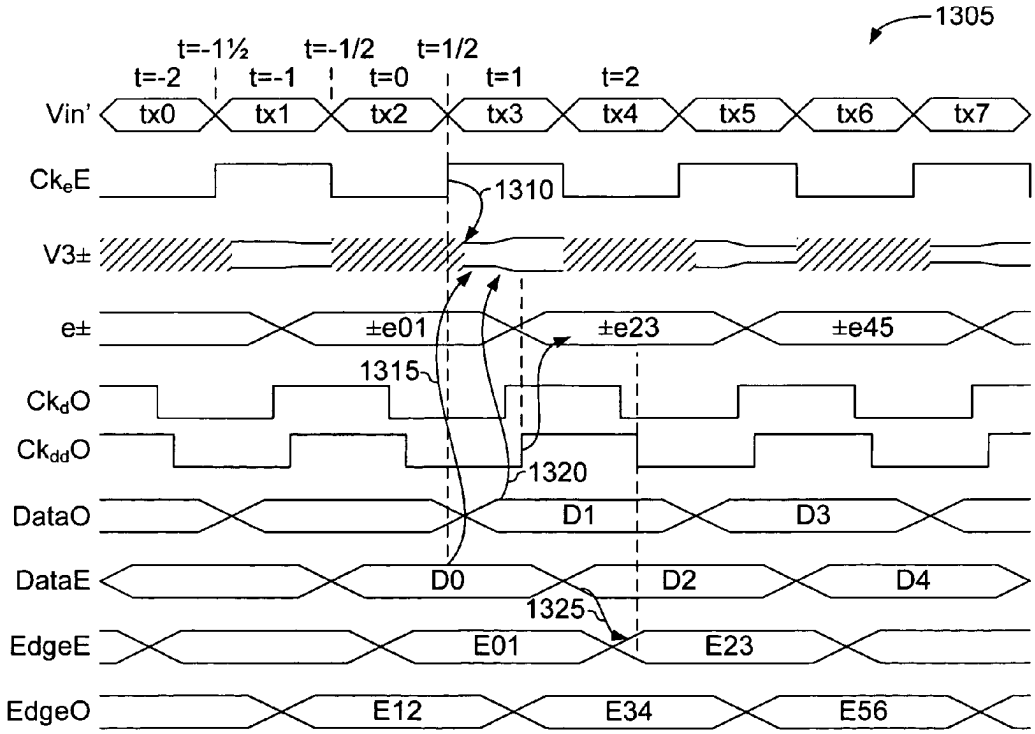

FIG. 13B

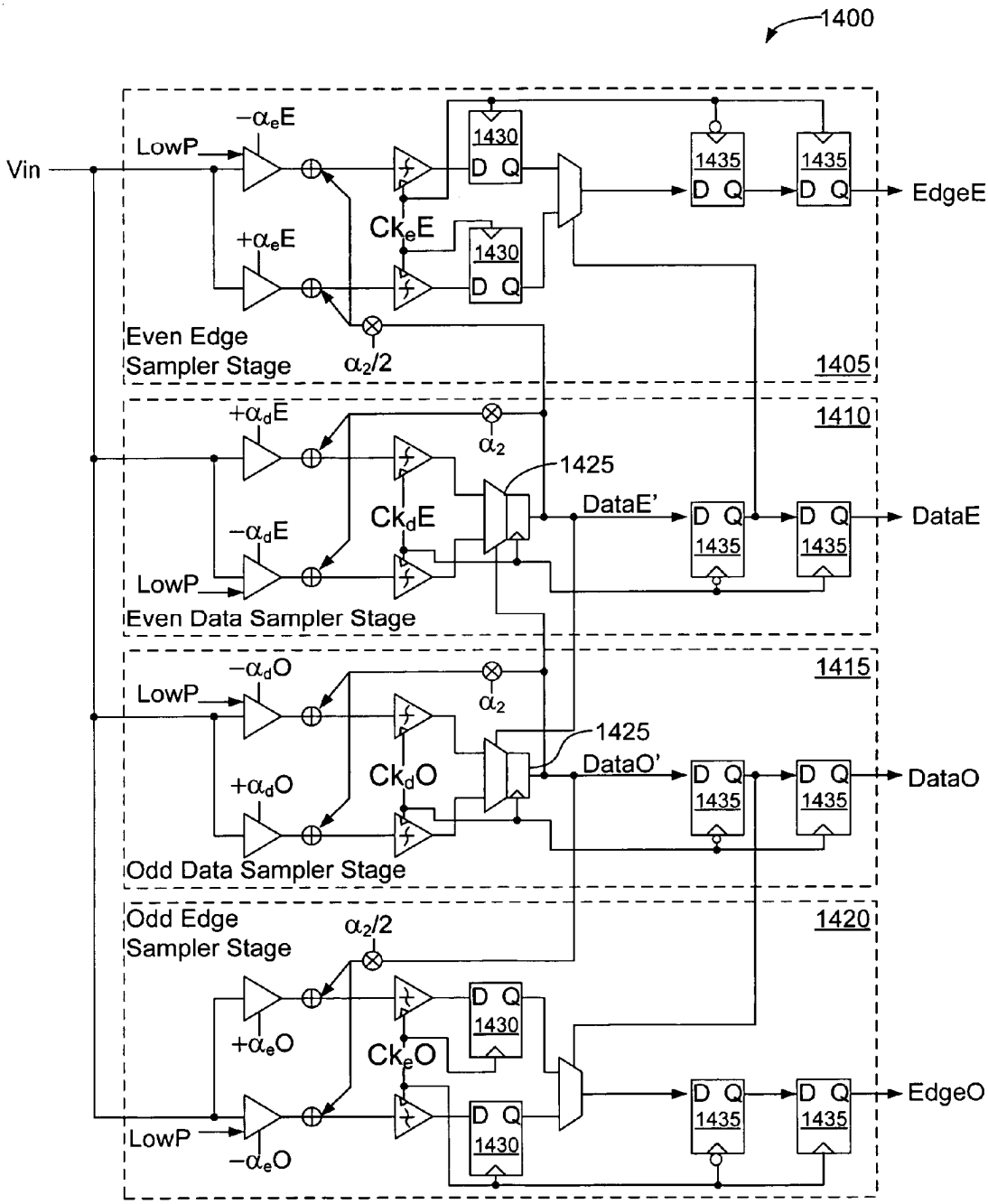
1400
Vin
LowP
$-\alpha_e E$
$+\alpha_e E$
$Ck_e E$
1430
D Q
1435
EdgeE
Even Edge
Sampler Stage
$\alpha_2/2$
1405
$+\alpha_d E$
$-\alpha_d E$
α_2
1425
$Ck_d E$
DataE'
DataE
1410
Even Data Sampler Stage
$-\alpha_d O$
$+\alpha_d O$
$Ck_d O$
DataO'
DataO
1415
Odd Data Sampler Stage
Odd Edge
Sampler Stage
$+\alpha_e O$
$-\alpha_e O$
$Ck_e O$
EdgeO
1420

FIG. 14

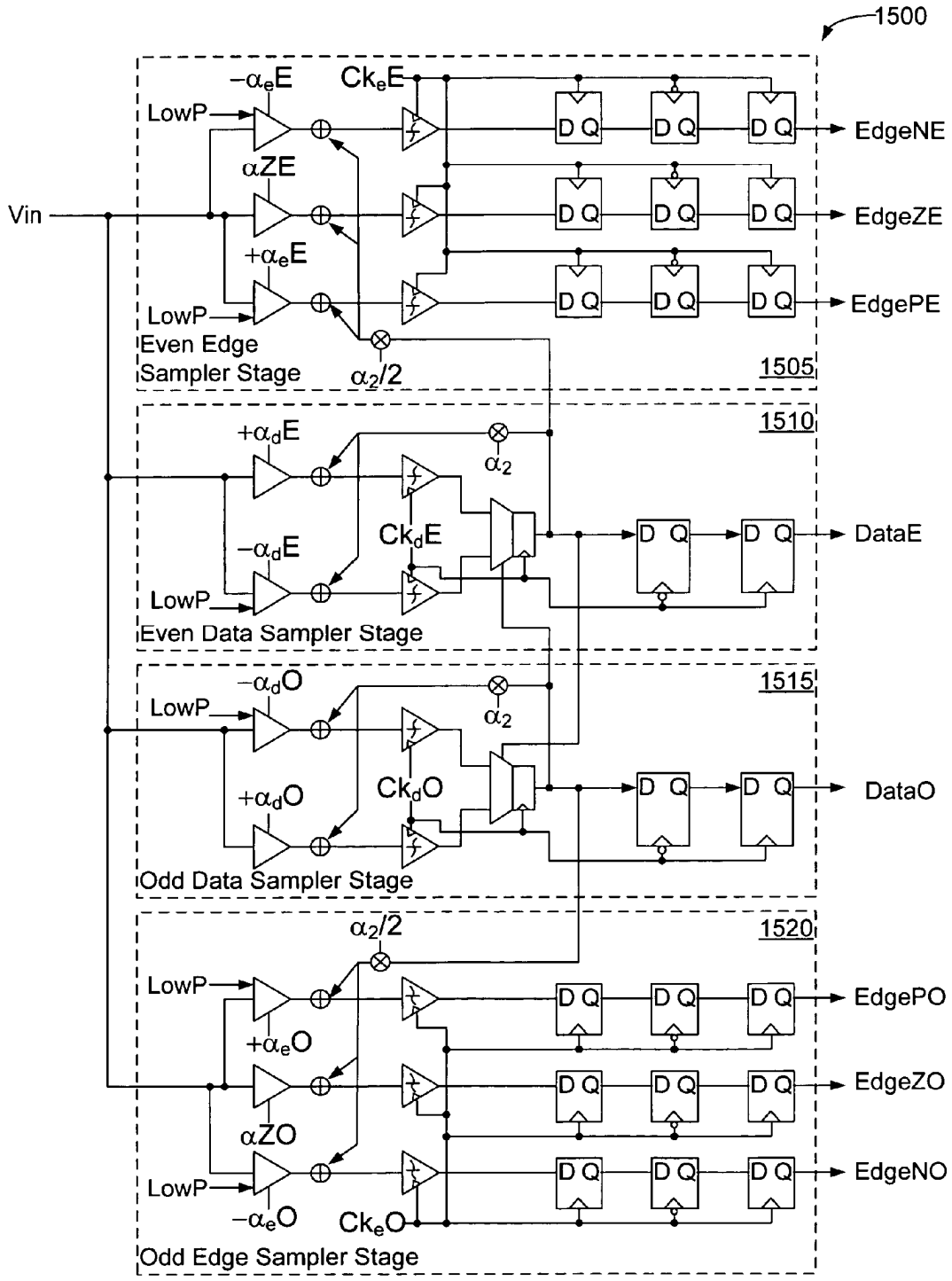
1500
Vin
LowP
$-\alpha_e E$
$Ck_e E$
αZE
$+\alpha_e E$
D Q
EdgeNE
EdgeZE
EdgePE
Even Edge Sampler Stage
$\alpha_2/2$
1505
$+\alpha_d E$
α_2
$-\alpha_d E$
$Ck_d E$
DataE
Even Data Sampler Stage
1510
$-\alpha_d O$
$+\alpha_d O$
$Ck_d O$
DataO
Odd Data Sampler Stage
1515
$+\alpha_e O$
αZO
$-\alpha_e O$
$Ck_e O$
EdgePO
EdgeZO
EdgeNO
Odd Edge Sampler Stage
1520

FIG. 15

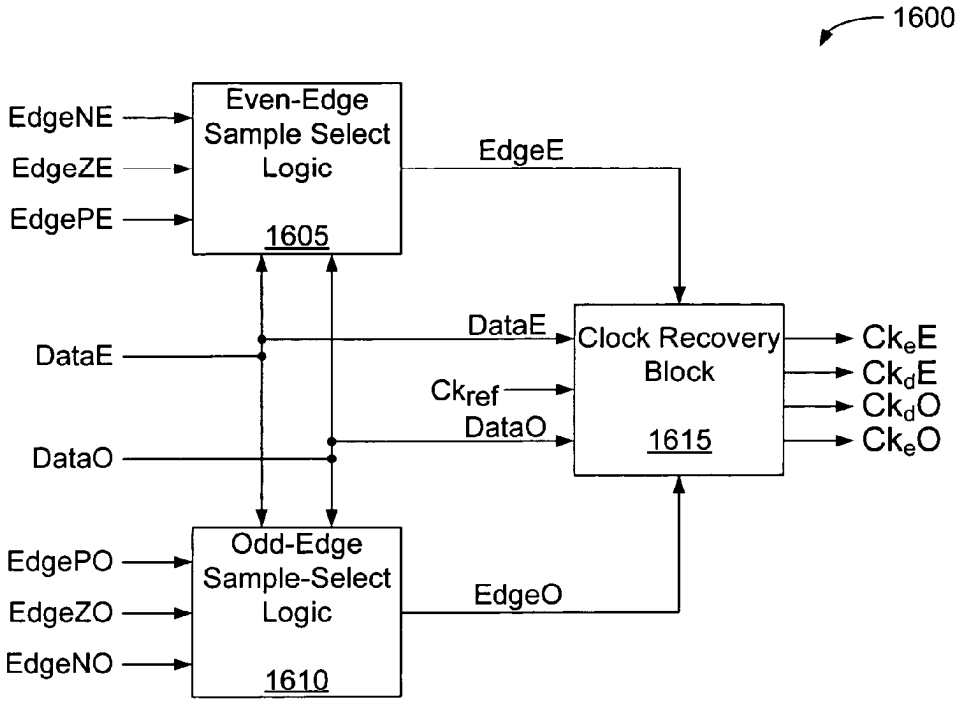
1600
EdgeNE
EdgeZE
EdgePE
Even-Edge Sample Select Logic
1605
EdgeE
DataE
DataE
Clock Recovery Block
1615
Ck_ref
DataO
DataO
Ck_eE
Ck_dE
Ck_dO
Ck_eO
EdgePO
EdgeZO
EdgeNO
Odd-Edge Sample-Select Logic
1610
EdgeO

FIG. 16

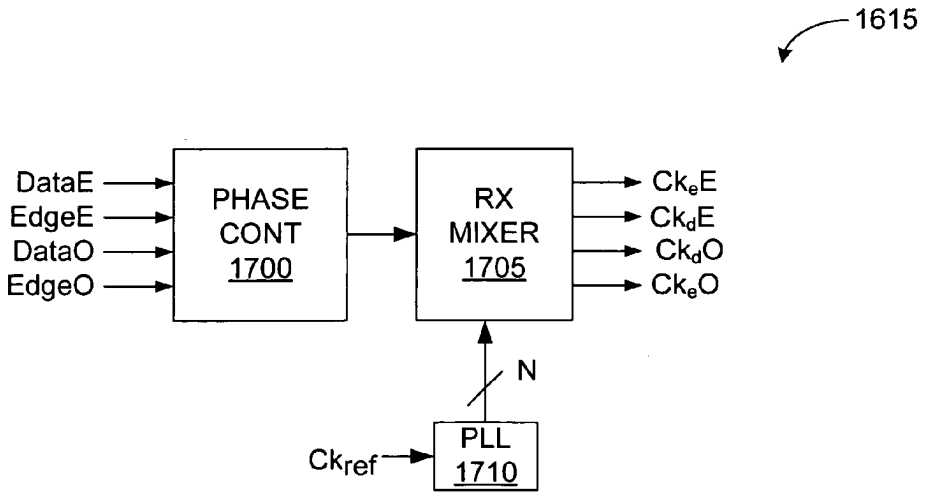
1615
DataE
EdgeE
DataO
EdgeO
PHASE CONT
1700
RX MIXER
1705
Ck_eE
Ck_dE
Ck_dO
Ck_eO
N
Ck_ref
PLL
1710

FIG. 17

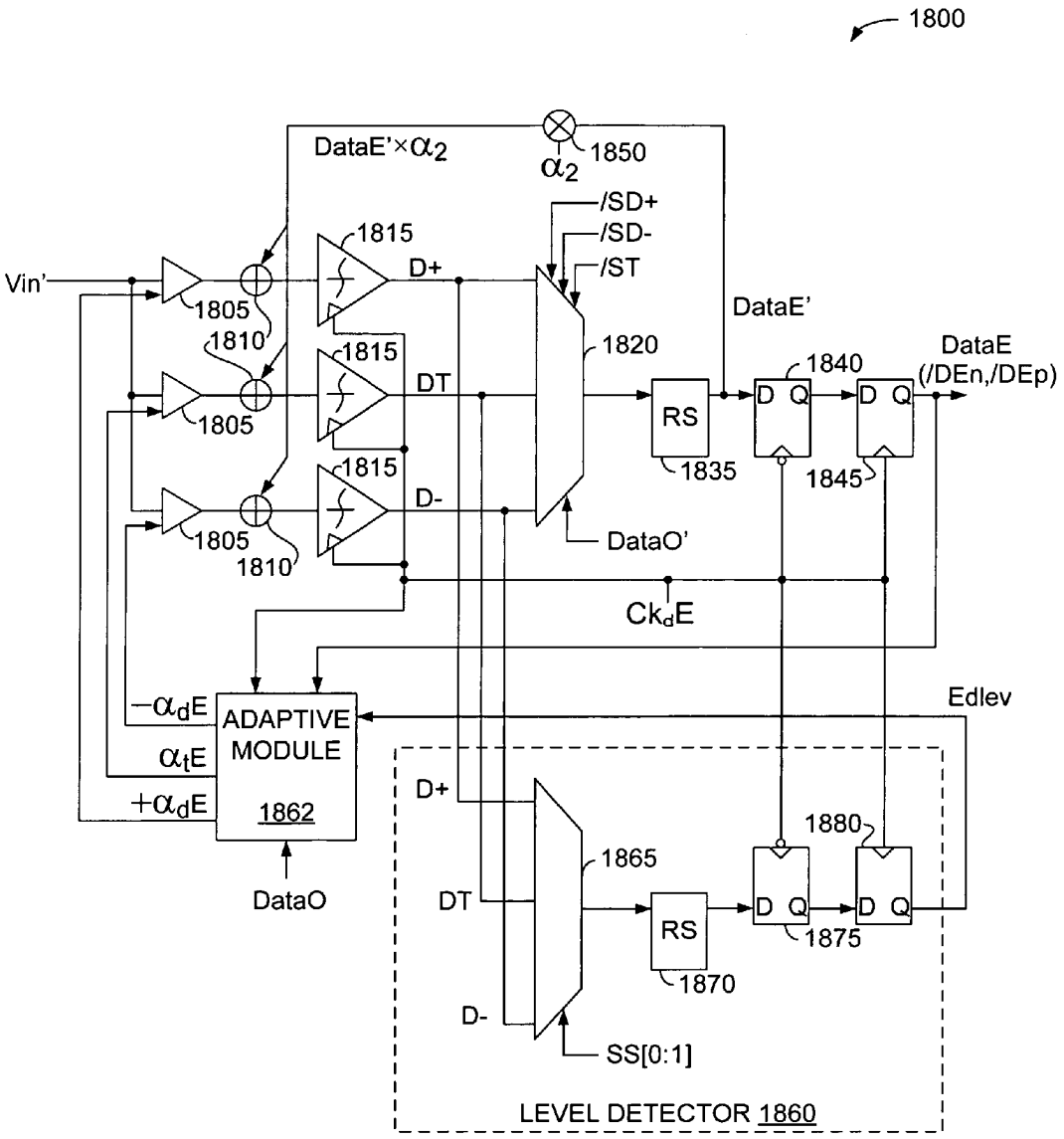
1800
DataE'×α2
α2
1850
/SD+
/SD-
/ST
1815
D+
Vin'
1805
1810
1815
DT
1820
DataE'
1840
DataE
(/DEn,/DEp)
RS
D Q
D Q
1835
1845
1815
D-
1805
1810
DataO'
CkdE
Edlev
−αdE
ADAPTIVE
MODULE
αtE
+αdE
1862
D+
1865
1880
DataO
DT
RS
D Q
D Q
1875
1870
D-
SS[0:1]
LEVEL DETECTOR 1860

FIG. 18

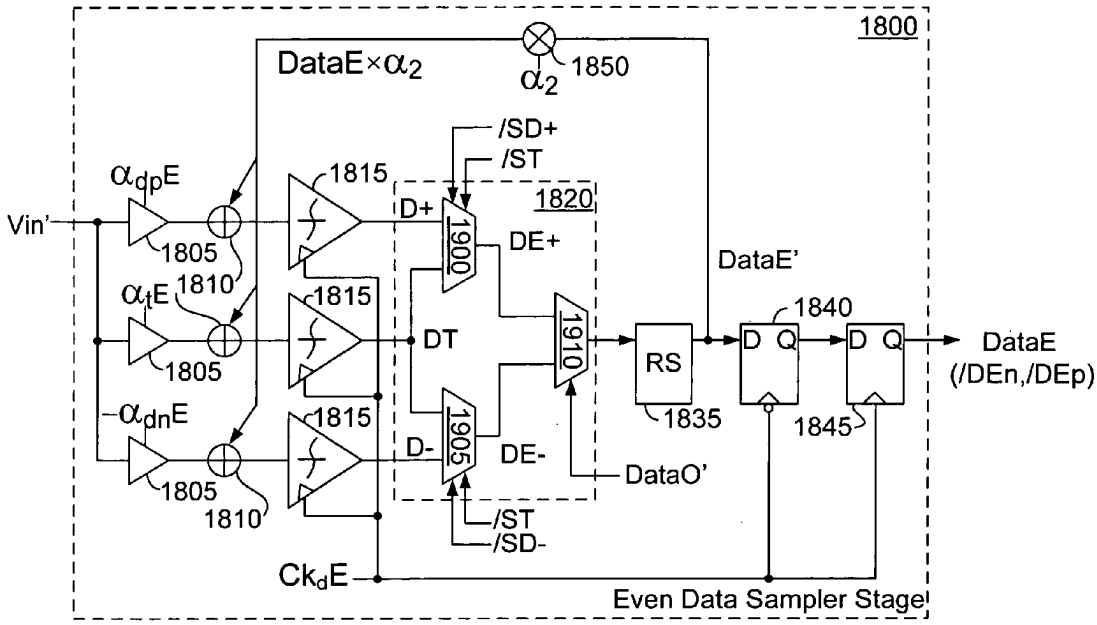

FIG. 19

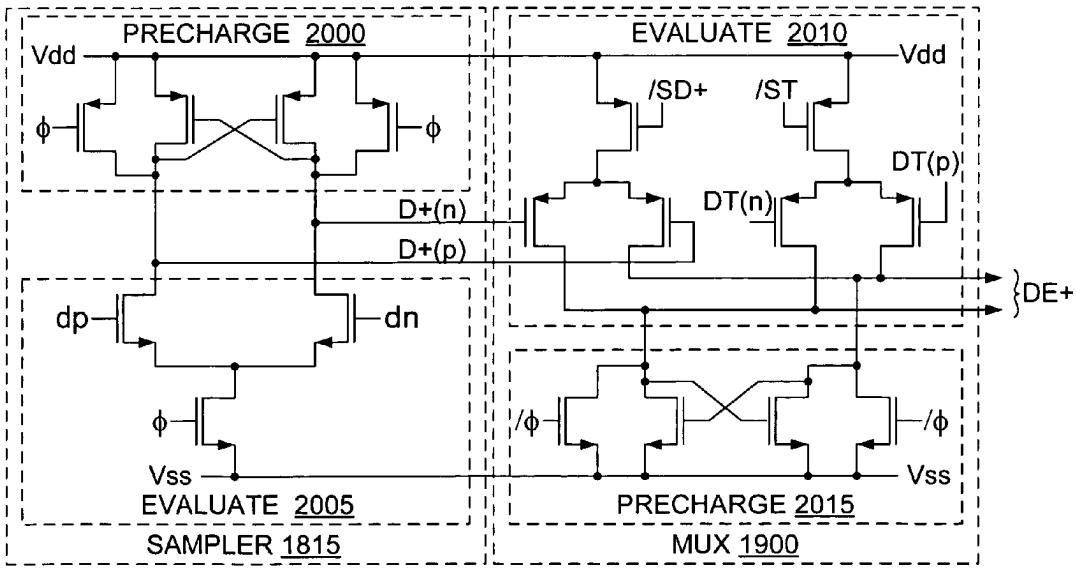

FIG. 20A

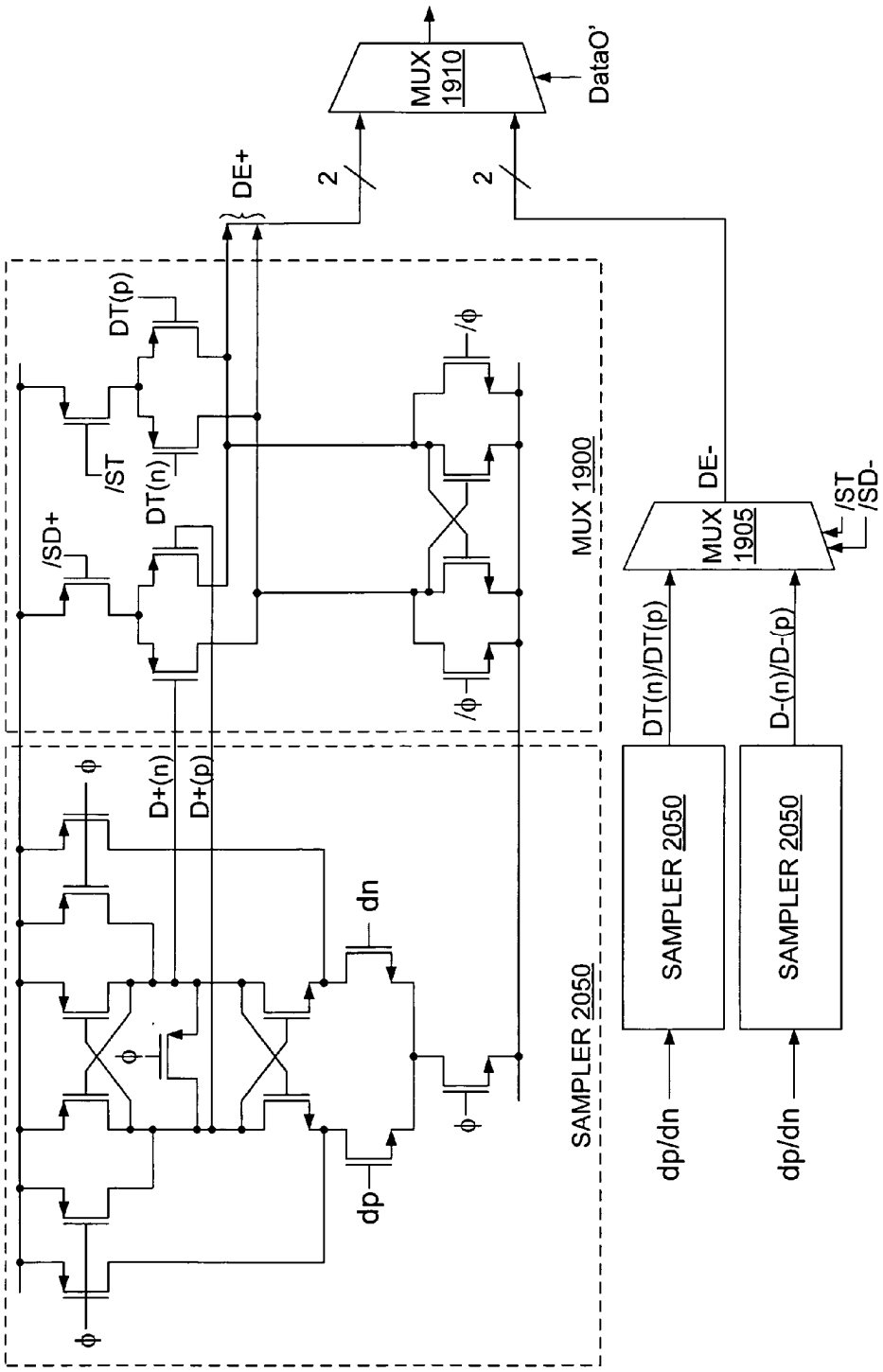
MUX 1910
DataO'
DE+
2
2
DT(p)
/ST
DT(n)
/SD+
/ϕ
/ϕ
MUX 1900
DE-
MUX 1905
/ST
/SD-
DT(n)/DT(p)
D-(n)/D-(p)
D+(n)
D+(p)
ϕ
ϕ
ϕ
ϕ
dn
dp
SAMPLER 2050
SAMPLER 2050
SAMPLER 2050
dp/dn
dp/dn

FIG. 20B

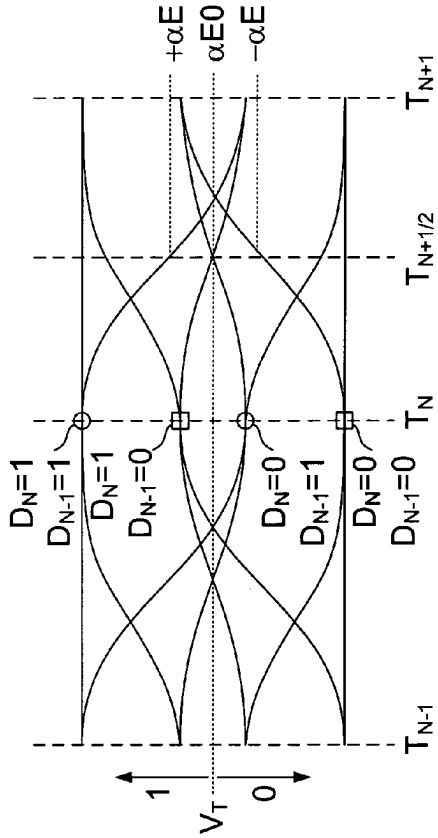
$D_N=1$
$D_{N-1}=1$
$D_N=1$
$D_{N-1}=0$
$D_N=0$
$D_{N-1}=1$
$D_N=0$
$D_{N-1}=0$
T_{N-1}
T_N
$T_{N+1/2}$
T_{N+1}
$+\alpha E$
$\alpha E0$
$-\alpha E$
1
V_T
0

FIG. 21

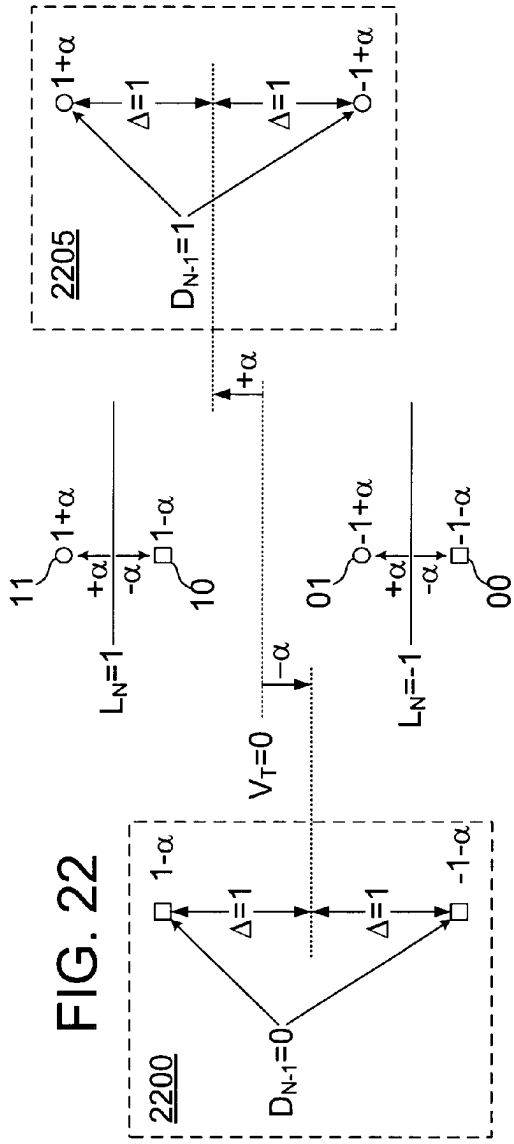
2200
$D_{N-1}=0$
1-α
-1-α
Δ=1
Δ=1
$V_T=0$
$L_N=1$
$L_N=-1$
11
10
01
00
1+α
1-α
-1+α
-1-α
+α
-α
2205
$D_{N-1}=1$
1+α
-1+α
Δ=1
Δ=1
+α
-α

FIG. 22

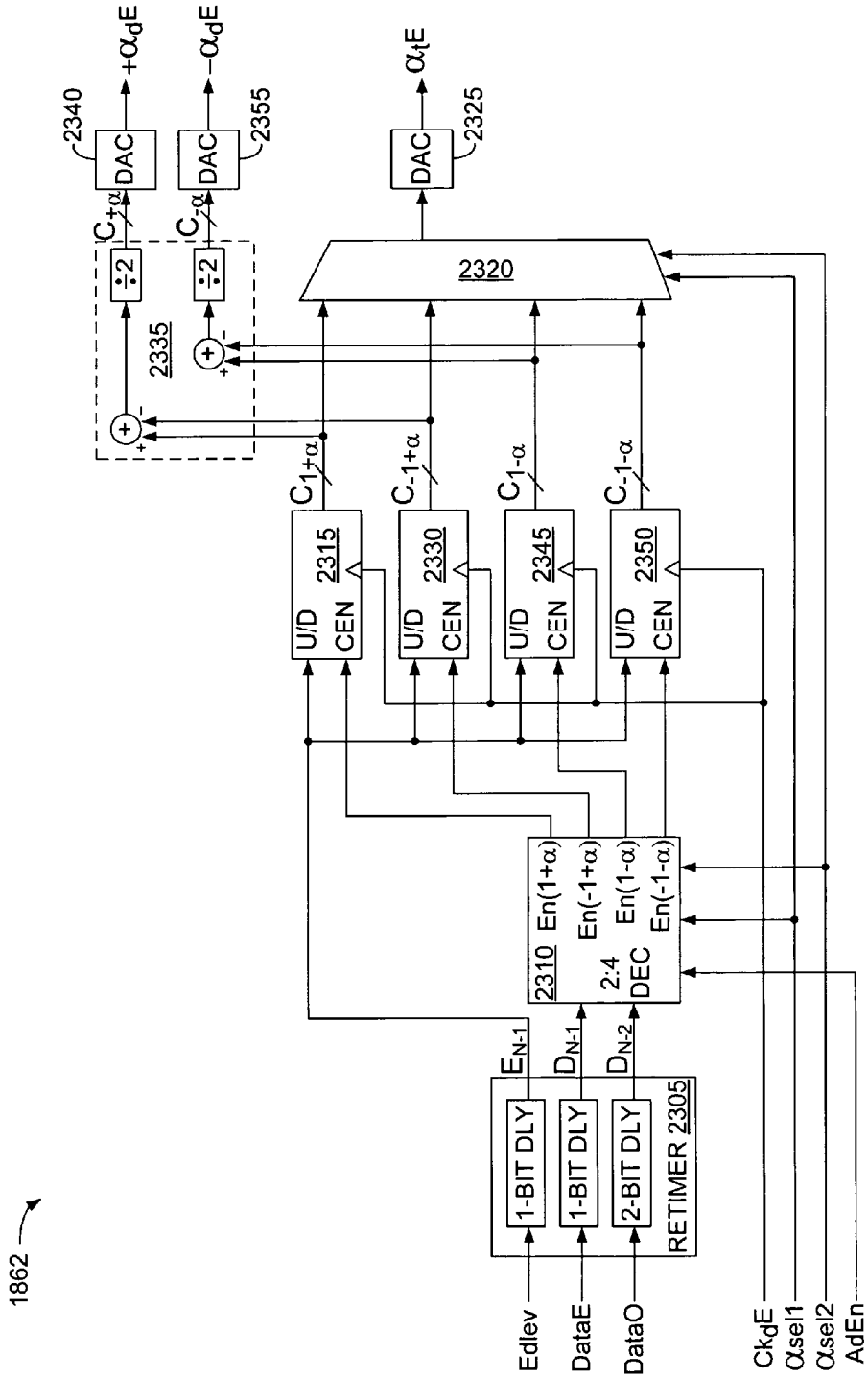
1862
2340
DAC
$+\alpha_d E$
$C_{+\alpha}$
÷2
2355
DAC
$-\alpha_d E$
$C_{-\alpha}$
÷2
2335
2325
DAC
$\alpha_t E$
2320
$C_{1+\alpha}$
$C_{-1+\alpha}$
$C_{1-\alpha}$
$C_{-1-\alpha}$
2315
2330
2345
2350
U/D
CEN
2310
2:4
DEC
En(1+α)
En(-1+α)
En(1-α)
En(-1-α)
E_{N-1}
D_{N-1}
D_{N-2}
1-BIT DLY
1-BIT DLY
2-BIT DLY
RETIMER 2305
EdIev
DataE
DataO
Ck_dE
αsel1
αsel2
AdEn

FIG. 23

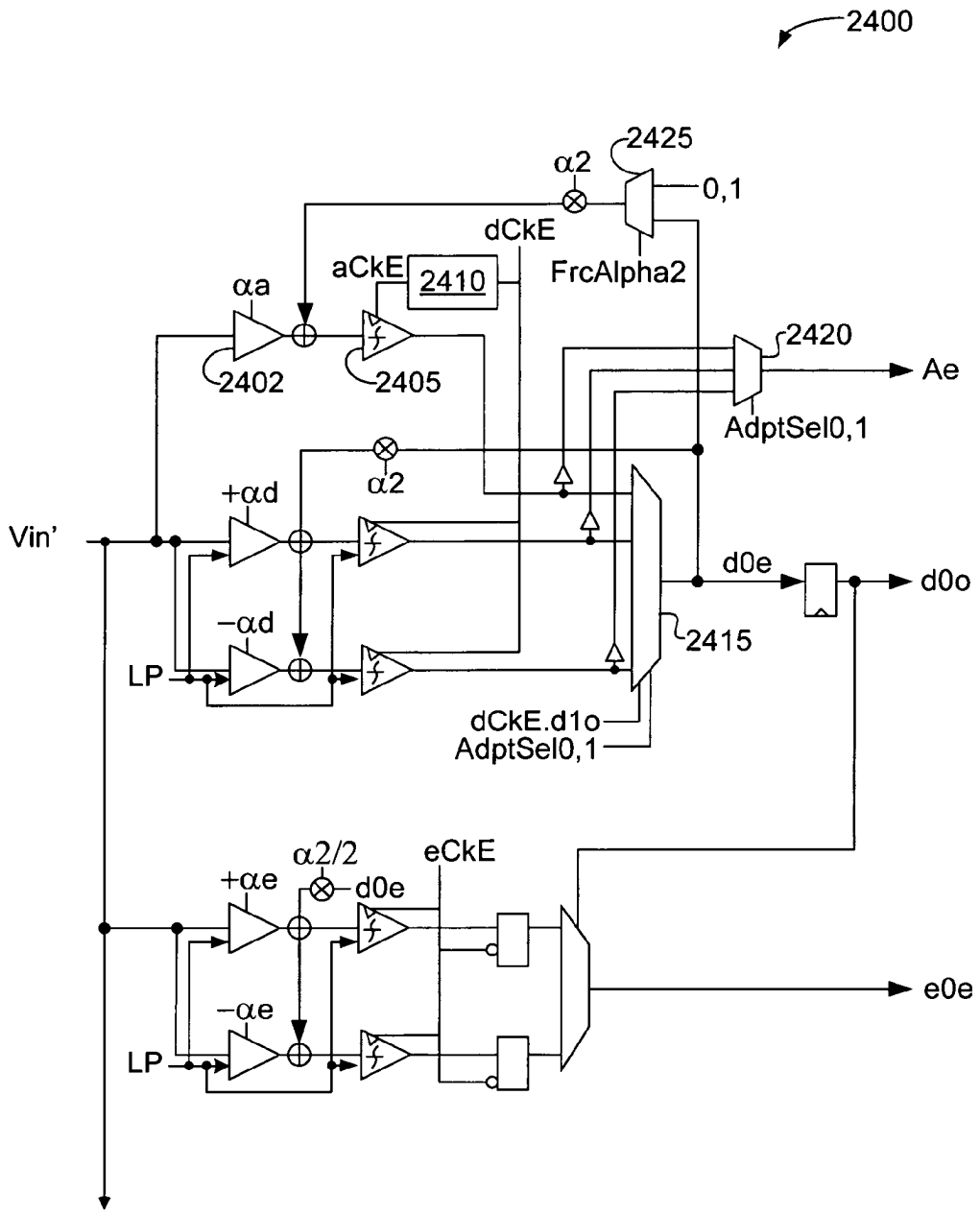
2400
2425
α2
0,1
dCkE
aCkE
2410
FrcAlpha2
αa
2420
Ae
2402
2405
AdptSel0,1
α2
+αd
Vin'
d0e
d0o
−αd
2415
LP
dCkE.d1o
AdptSel0,1
α2/2
eCkE
+αe
d0e
e0e
−αe
LP

FIG. 24

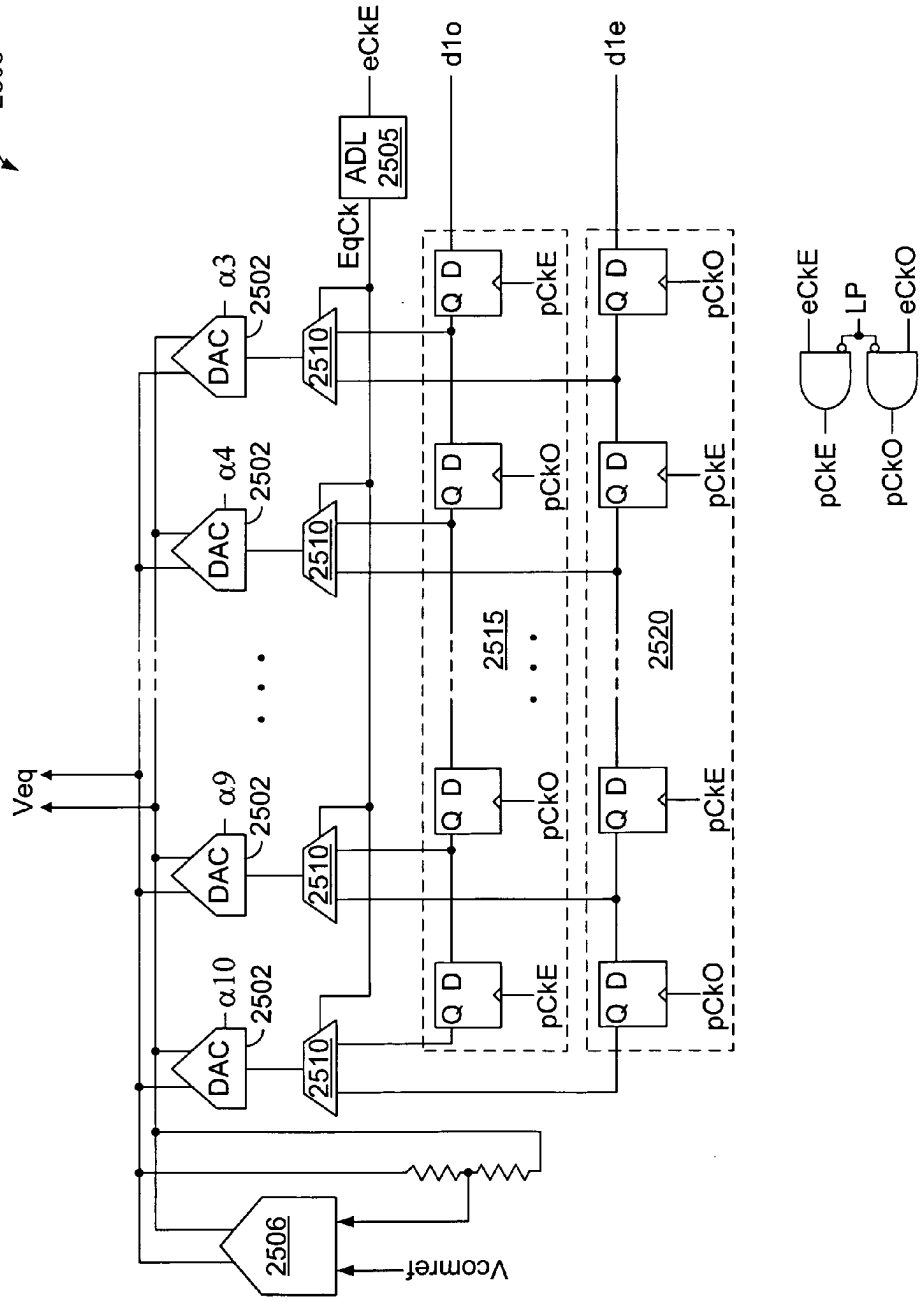
2500
Veq
DAC
α10
α9
α4
α3
2502
2510
2506
Vcomref
EqCk
ADL
2505
eCkE
d1o
d1e
Q D
pCkE
pCkO
2515
2520
eCkE
LP
eCkO
pCkE
pCkO

FIG. 25

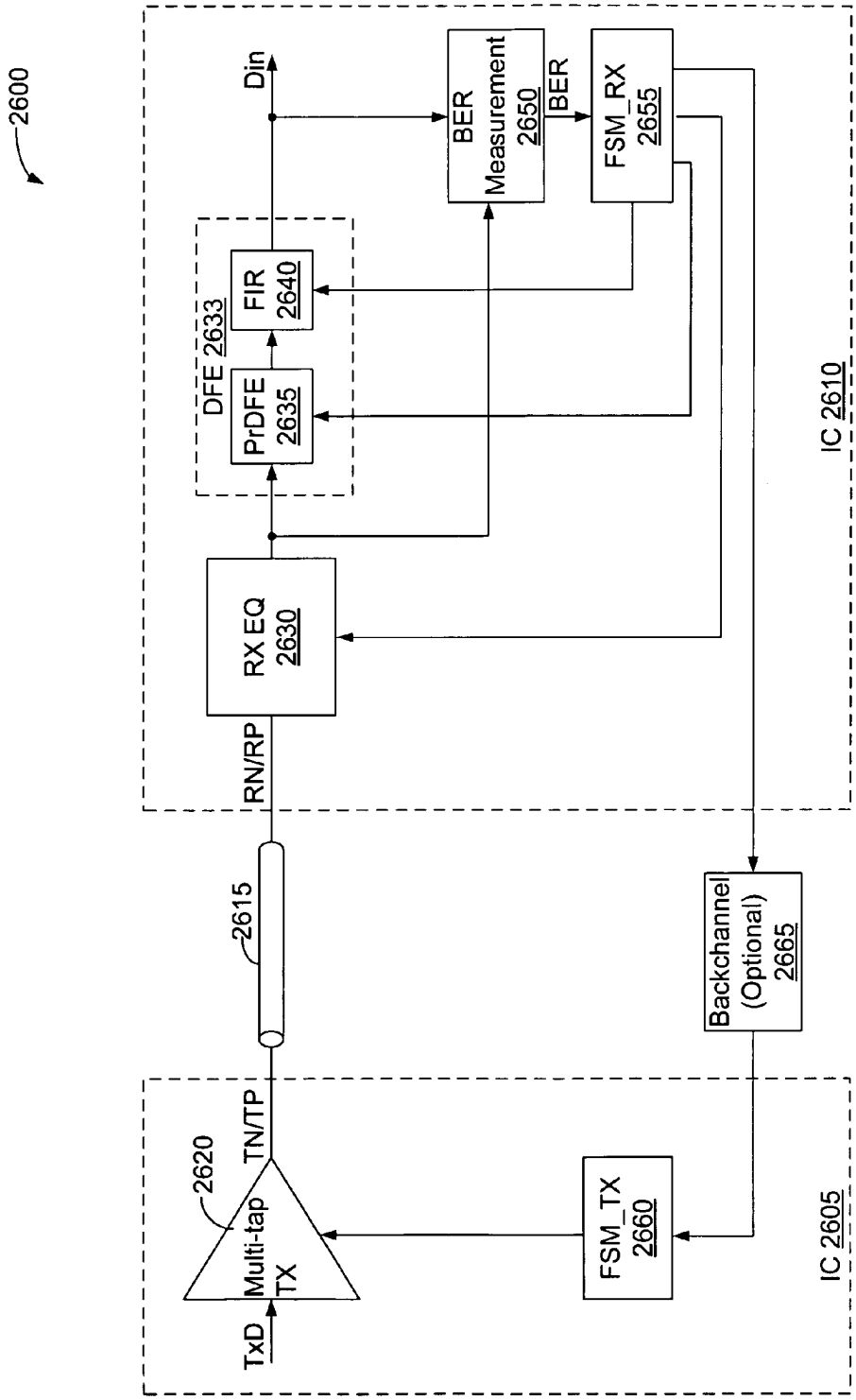
2600
Din
BER Measurement 2650
BER
FSM_RX 2655
DFE 2633
FIR 2640
PrDFE 2635
IC 2610
RX EQ 2630
RN/RP
2615
Backchannel (Optional) 2665
TN/TP
2620
Multi-tap TX
TxD
FSM_TX 2660
IC 2605

FIG. 26

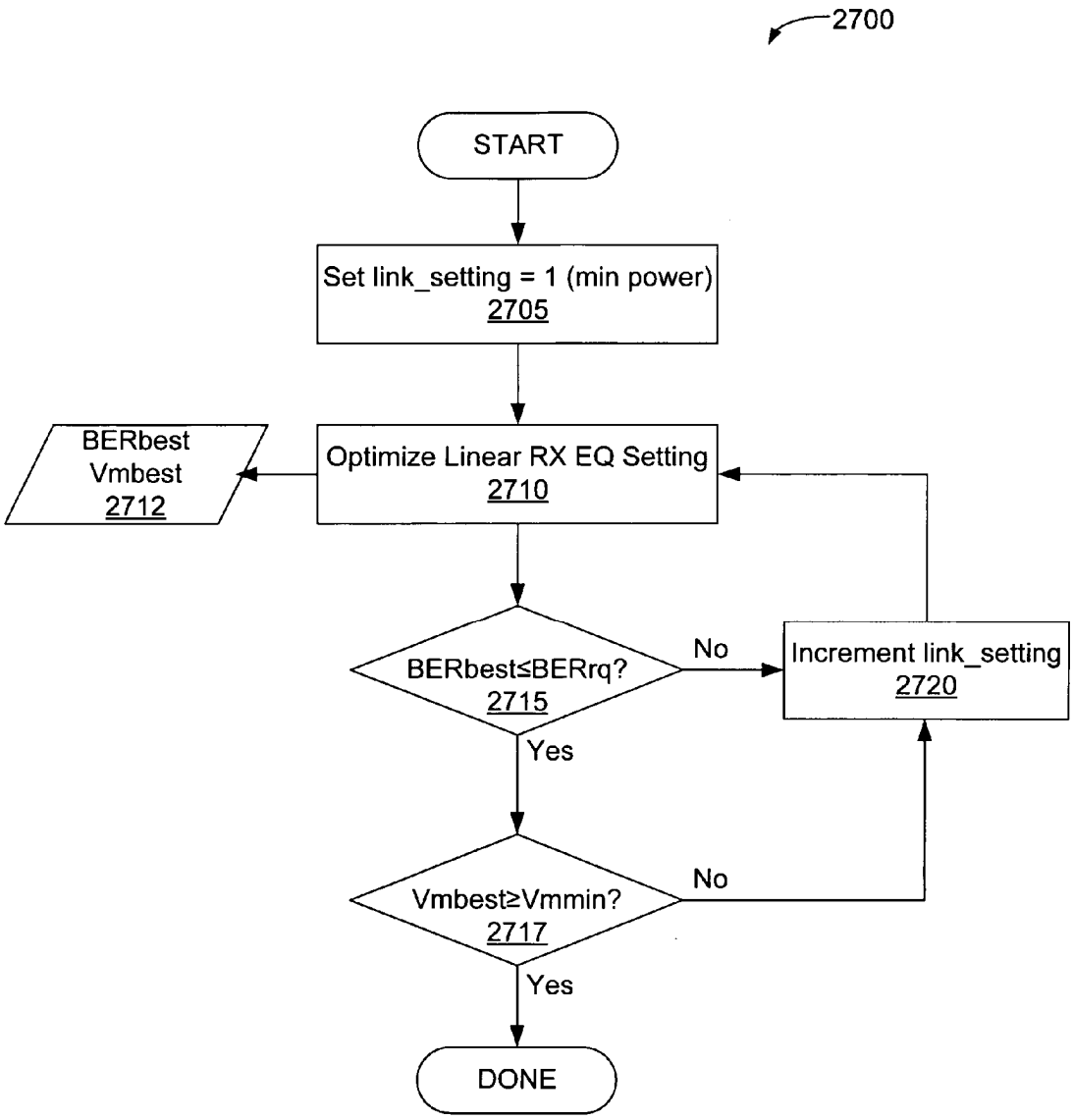
2700
START
Set link_setting = 1 (min power)
2705
Optimize Linear RX EQ Setting
2710
BERbest
Vmbest
2712
BERbest≤BERrq?
2715
No
Increment link_setting
2720
Yes
Vmbest≥Vmmin?
2717
No
Yes
DONE

FIG. 27

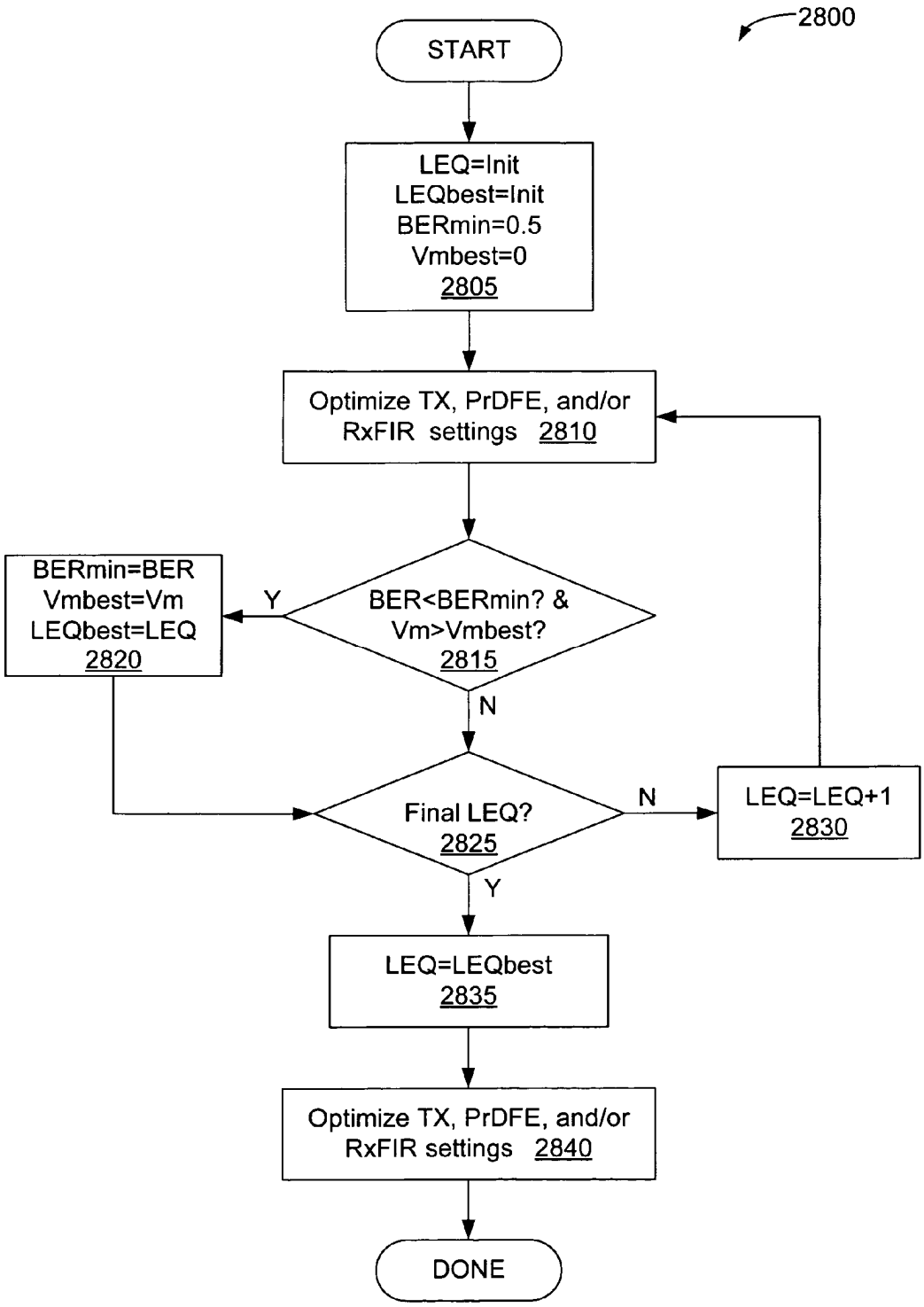
2800
START
LEQ=Init
LEQbest=Init
BERmin=0.5
Vmbest=0
2805
Optimize TX, PrDFE, and/or RxFIR settings 2810
BERmin=BER
Vmbest=Vm
LEQbest=LEQ
2820
Y
BER<BERmin? &
Vm>Vmbest?
2815
N
Final LEQ?
2825
N
LEQ=LEQ+1
2830
Y
LEQ=LEQbest
2835
Optimize TX, PrDFE, and/or RxFIR settings 2840
DONE

FIG. 28

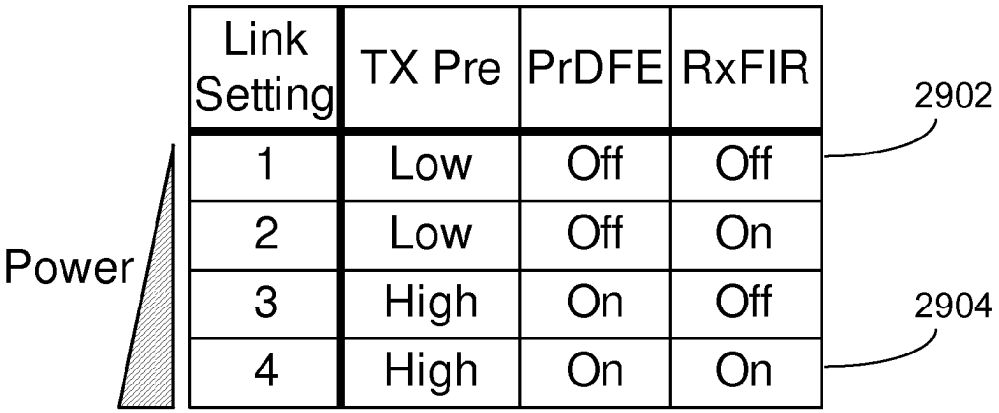
Link Setting
TX Pre
PrDFE
RxFIR
1
Low
Off
Off
2
Low
Off
On
3
High
On
Off
4
High
On
On
Power
2902
2904

FIG. 29

HIGH-SPEED SIGNALING SYSTEMS WITH ADAPTABLE PRE-EMPHASIS AND EQUALIZATION

CROSS-REFERENCE TO RELATED APPLICATIONS

This application claims priority from U.S. Provisional Applications numbered 60/645,823 and 60/686,754, each of which is incorporated herein by reference.

FIELD OF THE INVENTION

The present invention relates generally to the field of communications, and more particularly to high speed electronic signaling within and between integrated circuit devices.

BACKGROUND

The performance of many digital systems is limited by the interconnection bandwidth within and between integrated circuit devices (ICs). High performance links between ICs suffer from many effects that degrade signals. Primary among them are attenuation (lowering of the pulse-response amplitude), dispersion (broadening of the pulse-response width), and reflections (ripples following the pulse response). In many systems the same link electronics will be used to operate over a variety of different environments, collectively providing high speed performance using an acceptable level of power. There is therefore a need for methods and circuits for balancing the power and performance requirements for links and collections of links.

DESCRIPTION OF THE FIGURES

FIG. **1** illustrates a signaling system **100** in accordance with one embodiment.

FIG. **2** depicts a multi-channel communication system **200** in accordance with another embodiment.

FIG. **3** depicts a transmitter **300**, with pre-emphasis, in accordance with one embodiment.

FIG. **4** depicts FIR Pipe **310** of FIG. **3** in accordance with one embodiment.

FIG. **5** depicts tap-share mux **315** and driver **330** in accordance with one embodiment.

FIG. **6**A depicts a sub-driver **505** in accordance with one embodiment.

FIG. **6**B depicts modified input circuitry for sub-driver **505** of FIGS. **5** and **6**A.

FIG. **7** depicts an embodiment of an area and power-efficient decision-feedback equalizer (DFE) **700**.

FIG. **8** depicts a DFE **800** in accordance with another embodiment.

FIG. **9** depicts an embodiment of an area and power-efficient receiver **900** that corrects for ISI associated with multiple most-recent data bits in accordance with another embodiment.

FIG. **10** schematically depicts equalizer **910** of FIG. **9** in accordance with one embodiment.

FIG. **11** schematically depicts a bias-voltage generator **1100** for use with equalizer **910** FIG. **10**.

FIG. **12** depicts a receiver **1200** in accordance with one double data rate (DDR) embodiment that recovers timing information from the incoming data.

FIG. **13**A is a waveform diagram **1300** depicting the operation of odd data sampler **1220** of FIG. **12**.

FIG. **13**B is a waveform diagram **1305** depicting the operation of even edge sampler stage **1225** of FIG. **12**.

FIG. **14** depicts a receiver **1400** in accordance with a second DDR embodiment that recovers timing information from an incoming signal Vin.

FIG. **15** depicts a receiver **1500** in accordance with a third DDR embodiment that recovers timing information from the incoming signal.

FIG. **16** details clock recovery circuitry **1600** for use with receiver **1500** of FIG. **15**.

FIG. **17** depicts an embodiment of a well-known type of clock recovery block **1615**.

FIG. **18** depicts an embodiment of an even data sampler stage **1800** in accordance with another DDR embodiment.

FIG. **19** depicts sampler stage **1800** in accordance with one embodiment.

FIG. **20**A details embodiments of the topmost sampler **1815** of FIGS. **18** and **19** and the associated multiplexer **1900** instantiated as cascaded dynamic logic circuits, or "Domino logic," for improved speed performance.

FIG. **20**B depicts three samplers **2050** operatively coupled to multiplexers **1900**, **1905**, and **1910** of FIG. **19**.

FIG. **21** illustrates the bimodal distribution of a binary signal observed at a signal receiver when the primary source of ISI is the signal transmitted in the immediately preceding symbol time (or, after all other significant sources of ISI have been corrected, e.g. by DFE).

FIG. **22** illustrates the four partial response signal levels depicted in FIG. **21** relative to nominal voltage level VT.

FIG. **23** depicts adaptive module **1862** of FIG. **18** in accordance with one embodiment.

FIG. **24** depicts an embodiment of an even data sampler stage **2400** in accordance with another DDR embodiment.

FIG. **25** depicts an embodiment of an FIR filter **2500** suitable for use in a number of the foregoing embodiments.

FIG. **26** depicts an adaptive communication system **2600** in accordance with one embodiment.

FIG. **27** is a flowchart **2700** depicting a method of finding a power setting for system **2600** of FIG. **26** that minimizes operating power in achieving a desired level of performance.

FIG. **28** is a flowchart **2800** depicting a method of optimizing linear receive equalizer settings in step **2710**, of FIG. **27**, in accordance with one embodiment.

FIG. **29** is a table that illustrates possible equalizer settings and their possible relative power requirements.

DETAILED DESCRIPTION

FIG. **1** illustrates a signaling system **100** in accordance with one embodiment. System **100** includes a pre-emphasizing transmitter **105** and equalizing receiver **110** coupled to one another via a high-speed signal path, or channel, **115**, and a controller **120** coupled to transmitter **105** and the receiver **110**, typically via relatively low-speed signal paths **125**, **127**, and **130**. In one embodiment, the signal path **115** is formed by component signal paths **115**A, **115**B and **115**C (e.g., transmission lines that introduce respective, nonzero propagation delays and exhibit respective impedance characteristics), each disposed on respective circuit boards that are coupled to one another via circuit board interfaces **135** and **137** (e.g., connectors). In a specific implementation, signal path **115**B is formed on a backplane and signal paths **115**A and **115**C are formed on respective daughterboards (e.g., line cards) that are removably coupled to the backplane via connectors **135** and **137**.

Transmitter **105** and receiver **110** may be implemented in respective integrated circuit (IC) devices that are mounted on

the daughterboards. Controller **120**, which may be a general or special purpose processor, state machine or other logic circuit, may be instantiated with one or both of transmitter **105**, receiver **110**, or within yet another integrated circuit device or devices. Signal path **125** conveys to controller **120** information expressing a measure of the quality of a digital bit stream transmitted over channel **115**. This information may be, for example, the bit error rate (BER), the voltage margin, the data level or another metric of system operating margin. Controller **120** uses this information to find suitable settings for transmitter **105** and receiver **110** and conveys the settings to transmitter **105** and receiver **110** via signals paths **127** and **130**. Controller **120** may also consider other information to establish appropriate transmitter and receiver settings, in one embodiment selecting the lowest power setting for which system **100** provides some minimum communication bandwidth over channel **115** without exceeding a specified BER and/or falling below a specified minimum voltage margin. An additional signal path **132** between transmitter **105** and controller **120** can be included to convey measures of swing levels, power, backchannel signal quality, Time Domain Reflectometry (TDR) signatures, etc., that controller **120** might use for analysis and control of link quality.

Transmitter **105** includes an output driver **141** and transmit pre-emphasis circuitry (sometimes referred to as a transmit equalizer) made up of e.g. a transmit pipe **143** and a bank of output drivers or sub-drivers **147**. Output driver **141** and sub-drivers **147** function collectively to drive each current symbol onto channel **115**. Pre-emphasis signals from sub-drivers **147** combines with the main signal from driver **141** to emphasize signal components that might otherwise be too attenuated by channel **115** for accurate interpretation by receiver **110**. Pre-emphasis distorts the transmitted signal to offset the distortion due to the low-pass nature of the associated channel. The desired result is typically an equalized signal at the far end of the channel. The pre-emphasized transmit signal TP/TN may be a binary, differential, AC-coupled voltage signal. Other embodiments may employ signals that are e.g. single-ended, multilevel (more than two levels), DC coupled, or current driven.

Each of sub-drivers **147** is either a pre-tap sub-driver or post-tap sub-driver. If driver **141** has already transmitted the data value at the sub-driver, the sub-driver is a post-tap sub-driver; whereas if driver **141** has yet to transmit the data value at the sub-driver, the sub-driver is a pre-tap driver. Transmit pipe **143** might select, for example, N post-tap drivers and one pre-tap driver. Accordingly, signal TP/TN would have a signal level according to data values having symbol latencies of −1, 0, 1, 2, . . . , N, where the symbol latency of a given data value refers to the number of symbol times by which transmission of the data value lags the transmission of the primary value by driver **141**. Different numbers of post-tap and pre-tap drivers may be provided in alternative embodiments, thereby allowing for pre-emphasis based on values having different symbol latencies with respect to the main tap.

Still referring to FIG. **1**, receiver **110** may include a linear equalizer **150** and a multi-tap decision-feedback equalizer (DFE) **152**. Linear equalizer **150** equalizes the received data signal RP/RN from channel **115** to produce an equalized signal Veq. Equalizer **150** amplifies signal RP/RN using a range of amplification factors, with higher frequencies components typically being treated to higher amplification factors. Channel **115** will typically exhibit a low pass filter effect, in which case equalizer **150** may be used to compensate for attenuation of higher-frequency signal components. In embodiments in which equalizer **150** is adjustable, the degree to which equalizer **150** amplifies e.g. higher frequency signal components relative to lower frequency components can be adjusted by controller **120** or some other means. In some embodiments, equalizer **150** can equalize incoming signals by attenuating some frequency components more than others or by a combination of amplification and attenuation.

DFE **152** includes a sampler **154**, a buffer **156**, and tap select logic **158**. Sampler **154** samples equalized data signals Veq to recover the data symbols expressed as signal TP/TN from transmitter **105**, and may support partial-response DFE taps. Buffer **156** stores sequences of the sampled data symbols as post-tap data values. Tap select logic **158** may be included to enable a subset of data values within buffer **156** to be selected to source equalizer taps for receive-side equalization. Because the subset of data values may be selected according to the precise symbol latencies of reflections and other high-latency distortions, a relatively small number of data values may be selected to form receive-side equalization taps having latencies that match the latencies of whatever distortions are evident in the communication link.

The combination of pre-emphasizing transmitter **105**, linear equalizer **150**, and multi-tap DFE **152** allows the communication link associated with channel **115** to operate in various modes. For highest performance, transmitter **105** may be configured to reduce or eliminate precursor ISI only, linear equalizer **150** may provide channel inversion and gain, and multi-tap DFE **152** may be configured to reduce or eliminate post-cursor ISI. In lower-performance modes that save power, some of the feedback taps of DFE **152** can be shut down and transmitter **105** can be configured to minimize ISI from additional adjacent bits, e.g. the second postcursor and the first precursor, while the linear equalizer may be used to provide gain or channel inversion and gain. Other modes reduce or eliminate power supplied to the PrDFE circuitry in sampler **154** or some taps in transmitter **105**. This flexibility allows links to be configured to use the minimum power required to provide an adequate measure of performance by adjusting the amount and type of equalization applied.

FIG. **2** depicts a multi-channel communication system **200** in accordance with another embodiment. System **200** includes a pair of integrated circuits (ICs) **205** and **210** that communicate via a number of communication channels **215**, **220**, and **225**. A pair of transmitters **230** and **235** transmits data signals Da**0** and Da**1** from IC **205** to a respective pair of receivers **227** and **229** on IC **210** via channels **215** and **220**, and a transmitter **240** transmits data signal DaN from IC **210** to a corresponding receiver **245** on IC **205** via channel **225**. Receivers **227**, **229**, and **245** may each include a linear equalizer and a DFE, and each of transmitters **230**, **235**, and **240** may be equipped with pre-emphasis circuitry, as discussed above in connection with FIG. **1**.

Each transmitter, linear equalizer, and DFE includes a control port by which the corresponding component can be controlled in a manner that affects power usage and speed performance. In accordance with one embodiment, the characteristics of each adjustable element can be controlled separately or together to achieve a desired tradeoff between power usage and system performance. For example, channel **215** is depicted as a short line to symbolize a short, low-attenuation channel, whereas channel **220** is depicted as including a loop to symbolize a relatively longer, high-attenuation channel. Assuming that the links associated with channels **215** and **220** are expected to achieve the same data rate, it is likely that the link associated with channel **215** could be operated in a more efficient, lower-power mode than the link associated with channel **220**.

The links associated with channels **215**, **220**, and **225** can be optimized independently or together to achieve a desired

performance level while minimizing power usage. To this end, IC **210** includes a performance monitor **250** and control circuitry **255**. Performance monitor **250** is coupled to output terminals Din**0** and Din**1** from receiver **227** and **229** to assess the performance of the respective channels, e.g. by calculating the BER. The measurements of channel quality are forwarded to control circuitry **255**, which uses this information to adjust, for each associated link, the settings of one or more of the DFE, linear equalizer, and transmitter. A backchannel **260** provides a means of conveying settings from control circuit **255** to transmitters **230** and **235**. Backchannel **260** can be a line separate from the channels, or the backchannel information can be conveyed over the channels themselves. The link associated with channel **225** is included to illustrate that links may be included to convey data in either direction. That link includes a second performance monitor **265**, second control circuitry **270**, and a second backchannel **275**. In other embodiments, some or all of performance monitoring and control elements can be combined for use in collections of links. In this manner multi-channel effects such as crosstalk can be traded off vs. independent controls, such as total transmit power through adjustment of bias, tap weights (or other means), or transmit equalization magnitude.

FIG. **3** depicts a transmitter **300**, with pre-emphasis, in accordance with one embodiment. Transmitter **300** converts 10-bit parallel data TxDa[**9**:**0**] into serial data for transmission as a current-mode signal on differential output nodes TN and TP. Transmitter **300**, in coordination with an associated receiver, supports a high-performance mode that optimizes speed performance and a relatively lower-performance mode that sacrifices some performance in favor of improved power efficiency. Reducing the transmit amplitude, and thus the operating power of links that do not require full power to meet performance objectives, reduces supply noise, and consequently allows adjacent links to achieve higher performance. Tap weighting and selection are also configurable, to optimize performance in either power mode. The transmitter settings are adaptive in some embodiments.

Transmitter **300** includes a conventional serializer **305** that periodically loads one ten-bit byte of data TxDa[**9**:**0**] upon receipt of a load signal Load. The resulting serialized transmit data TxD is then shifted into four synchronous storage elements within a finite-impulse-response (FIR) pipe **310**, synchronized to a transmit clock Tclk. The storage elements are the taps of FIR pipe **310**, and their contents are conveyed to a tap-share mux **315** via four lines Tap[**3**:**0**]. Four sign signals Sign[**3**:**0**] from some tap-control logic **320** determine whether weighting to be applied for each tap is positive (additive) or negative (subtractive). FIR pipe **310** additionally receives a binary performance-select signal HiPerSel that places transmitter **300** in the high-performance mode when asserted (a logic one).

Control logic **320** issues tap-select signals TapSel to mux **315**. These select signals partially define the weights afforded the tap values from pipe **310**. A driver **330**, comprised in this example of eleven sub-drivers, combines the weighted taps from mux **315** to produce output signal TN/TP.

Some bias circuitry **335** generates a bias voltage Vbias from a reference current iTx that maintains constant the strength of driver **330**. Bias circuitry **335** generates four additional bias voltages Vb[**3**:**0**], each an adjustable fraction of bias voltage Vbias, to fine-tune the weight of the taps selected by mux **315**. The values of bias voltages Vb[**3**:**0**] are determined by sixteen (4×4) bias control signals Bias[**15**:**0**] from control logic **320**.

Control logic **320** derives control signals Sign[**3**:**0**], TapSel, and Bias[**15**:**0**] from four transmit-tap signals TxTap**0**-**3**. The manner in which these signals are used is detailed below. Control logic **320** additionally receives a mode signal TxMode that allows the user to select either a normal operational mode or a "null" mode in which transmitter **300** provides constant output currents on nodes TN and TP for calibration. A signal TapInvert inverts the polarity of the transmitter taps, and thus allows transmitter **300** to be used when e.g. the output pads are reversed.

FIG. **4** depicts FIR Pipe **310** of FIG. **3** in accordance with one embodiment. Pipe **310** includes six sequential storage elements **400** coupled in series to receive transmit data TxD. A multiplexer **405**, at the direction of performance-select signal HiPerSel, either connects all of storage elements **400** in series or couples the rightmost two storage elements **400** in parallel with the leftmost two. The contents of the middle two and rightmost two storage elements **400** are selectively inverted by respective XOR gates **410**, the outputs of which are conveyed in parallel to four additional storage elements **415**. Storage elements **400** and **415** include clock terminals collectively coupled to transmit clock Tclk.

From left to right, the contents of storage elements **415** represent the four taps Tap**0**-Tap**3** from pipe **310**. The output of the first tap Tap**0** is always the next data symbol (pre tap), the output of the second tap Tap**1** is always the main (i.e., the data currently being transmitted). In the high-performance mode (HiPerSel=1), multiplexer **405** bypasses the first four storage elements **400**, so that the output of the third tap Tap**2** follows the main data by three clock cycles (pre**3** tap) and the output of the fourth tap Tap**3** follows the main data by two clock cycles (pre**2** tap); in the lower-performance mode (HiPerSel=0), multiplexer **405** connects all six storage elements in series, such that the output of the third tap Tap**2** precedes the main data by one clock cycle (post tap) and the output of the fourth tap Tap**3** precedes the main data by two clock cycles (post**2** tap). In this way the actual latency of the main bit is not altered where adjacent transmitter taps are shifted between pre and post-cursor operation. The particular implementation of the FIR pipe **310** is not restrictive; one skilled in the art can easily see there are alternate embodiments which multiplex the equalization taps to different locations to improve overall system margin and power efficiency.

The power modes are not, in this example, to be understood in terms of transmitter **300** in isolation. Transmitter **300** uses essentially the same amount of power in either power mode in this embodiment. The difference in power modes may be viewed from the system perspective. In one lower-power mode in which a multi-tap transmitter is employed with a multi-tap receiver, for example, transmitter **300** reduces the impact of ISI by using one pre-tap and two post-taps while the taps of the receiver are disabled to save power. In a higher-power mode, transmitter **300** is configured to cancel ISI using three pre-taps and the corresponding receiver is enabled to cancel post-tap ISI. Such systems are discussed in more detail below.

Electrical pulses transmitted on a band-limited signaling path disperse in time as they travel from source to destination. In systems in which data is transmitted as a sequence of level-encoded electrical pulses, such time-domain dispersion results in a blending of neighboring pulses, an effect known as dispersion-type inter-symbol interference (ISI). ISI from preceding or following symbols can have additive or subtractive effects on the main data. Sign signals Sign[**3**:**0**] from (e.g. tap controller **320** of FIG. **3**) and XOR gates **410** are therefore provided to selectively invert the polarity of the symbols stored in elements **400**. Selective inversion also allows the polarity of transmitter **300** to be inverted (i.e., output terminals TN and TP become TP and TN, respectively). Turning to

the embodiment of FIG. **3**, the most-significant bit of each TxTap signal is the sign bit for the corresponding tap, e.g. TxTap**0**[**6**]=Sign[**0**].

FIG. **5** depicts tap-share mux **315** and driver **330** in accordance with one embodiment. Mux **315** is divided into six two-input multiplexers **500**, each of which has an output terminal connected to an input of one of eleven substantially similar sub-drivers **505** of driver **330** (here and elsewhere, the signals may be single-ended or differential). The differential output terminals of each sub-driver **505** are coupled to transmitter output terminals TP and TN.

The unshaded sub-drivers **505** have fixed output strengths (fixed drive current levels) governed by bias voltage Vbias. In contrast, each of the shaded sub-drivers **505** receives a respective bias voltage Vb# that can be varied to adjust drive strength. In one embodiment, for example, bias voltage Vb**3** to the leftmost sub-driver **505** can be adjusted between zero volts and bias voltage Vbias, over sixteen (2^4) steps, to produce a range of sixteen drive strengths from zero strength (disabled) to full strength (equal to 15/16 of the non-shaded sub-drivers in one embodiment). Turning to FIG. **3**, the four least-significant bits of each TxTap signal, conveyed to bias circuit **335** as part of signal Bias[**15**:**0**], determine the level selected for the corresponding bias voltage, e.g. Vb#=Vb*TxTap#[**3**:**0**]/16. In one embodiment, each bias voltage Vb# is the gate voltage of a diode-connected transistor coupled in series with four parallel-coupled, binary-weighted transistors. Combinations of the parallel-coupled transistors can be turned on to vary the drain-source current, and consequently the gate voltage, of the diode-coupled transistor.

Returning to FIG. **5**, between tap-select signal TapSel and the variable bias voltages Vb**0**-Vb**3**, driver **330** can be configured to provide a broad range of output strengths allocated among the four taps Tap**0**-Tap**3**. Each of taps Tap**0**-Tap**3** has associated therewith one of the shaded, adjustable sub-drivers, that can be use in combination with a selectable number of additional full-strength sub-drivers to cover a range of powers. Tap**1**, the main tap, is expected to be the most powerful, and can be coupled to output nodes TP and TN via as many as eight sub-drivers **505**, one adjustable and seven fixed. Muxes **500** can be used to allocate various of sub-drivers **505** to different taps to provide a range of pre-emphasis settings for each tap. Though not shown, sequential storage elements may be included between must **315** and driver **330**, and elsewhere, as needed to synchronize output signal TN/TP.

Returning to FIG. **3**, control logic **320** decodes the bits **4** and **5** of TxTap**0** to control the right-most two multiplexers **500**, and thus to control the number of sub-drivers to which signal Tap**0** is applied. Tap**0** is always applied to the rightmost shaded sub-driver **505**, and can be applied to one or both of the rightmost two sub-drivers **505**. Bits **4** and **5** of signals TxTap**2** and TxTap**3** likewise control the application of Taps **2** and **3**, respectively. Tap**1**, the main tap, may be applied to as few as one and as many as eight sub-drivers. The connectivity of Tap**1** is controlled by bits **4**, **5**, and **6** of TxTap **1**. In some embodiments the total drive strength remains relatively constant however sub-drivers **505** are configured.

While detailed in connection with specific transmitter architectures, other architectures are readily adapted for used in the communication systems described herein. Suitable transmitters with pre-emphasis are detailed, for example, in U.S. Pat. No. 6,266,379 by William J. Dally; U.S. patent application Ser. No. 10/949,372 entitled "Equalizing Driver Circuit And Method Of Operating Same," by Fred F. Chen; and U.S. patent application Ser. No. 10/261,875 entitled "Equalizing Transceiver with Reduced Parasitic Capacitance," by Fred F. Chen and Vladimir M. Stojanovic.

FIG. **6**A depicts a sub-driver **505** in accordance with one embodiment. Sub-driver **505** is a differential cascode driver, the drive strength of which is determined in part by bias voltage Vbias. Other sub-drivers **505** are identical, but receive a variable bias voltage to obtain a range of drive strengths. Signals datN and datP, e.g. differential tap signals Tap**0**-Tap**3**, traverse respective inverter chains to the gates of a pair of differential input transistors. The inverters in each inverter chain are sized to provide an appropriately fast fanout for driving the differential transistors. The load of sub-driver **505** includes a pair of cascode-coupled transistors and a corresponding pair of termination elements Rterm. Various types of termination elements may be used.

Some embodiments employ double-data-rate (DDR) transmitters, which may be architecturally similar to transmitter **300** of FIG. **3**, as will be understood by those of skill in the art. In one such embodiment, transmitter **300** of FIG. **3** is modified to include an additional FIR pipe and associated tap-share mux. Serializer **305** can be modified to provide the two FIR pipes with alternate data on alternate clock edges (rising and falling). The input nodes of sub-drivers **505** can then be modified, as depicted in FIG. **6**B, to include two pairs of input nodes dat**0**N/dat**0**P and dat**1**N/dat**1**P. A clock mux **600** then couples the appropriate tap outputs to terminals from the pair of FIR pipes to data terminals datN and datP at the direction of the transmit clock Tclk.

Communication systems in accordance with other embodiments employ different types of pre-emphasizing transmitters. For example, some embodiments may be equipped with RAM-DAC based pre-emphasis filters ("RAM-DAC" is an acronym for "random-access-memory, digital-to-analog converter"). For a detailed discussion of one such transmitter, see U.S. patent application Ser. No. 11/193,916 entitled "RAM-DAC for Transmit Preemphasis," by Andrew Ho, Fred F. Chen, and Jared L. Zerbe, filed Jul. 29, 2005.

Dispersion-type ISI becomes more pronounced at faster signaling rates, ultimately degrading the signal quality to the point at which distinctions between originally transmitted signal levels may be lost or reduced. In addition, many signal channels have impedance discontinuities that lead to signal reflections, which further contribute ISI that also becomes more pronounced at higher signal rates. Some receivers cancel ISI using a decision-feedback equalizer (DFE). DFEs multiply each of N recently received symbols by respective coefficients, the resulting products representing the ISI attributable to the corresponding symbol. Each of these products is added and the resulting sum subtracted from the received signal prior to sampling the next pulse. The ISI associated with the prior data is thereby removed.

In very high-speed systems it can be difficult to resolve the most recent data bit or bits in time to calculate their impact on the incoming symbol. Some receivers therefore ignore the impact of such symbols on the incoming signal, and consequently fail to correct for the ISI attributed to those symbols. Other receivers employ PrDFEs that sample incoming data using multiple correction coefficients, one for each of the possible values of the most recently received symbol or symbols. The correct product or products are then selected after the most recently received symbol or symbols are resolved. PrDFEs are effective, but require a separate computational path for each possible value of the most recently received symbol or, in the case of multiple symbols (multi-symbol PrDFE), a separate computational path for each possible combination of the multiple symbol values. This results in e.g. 2^N paths in a binary system that uses N prior symbols. The

additional paths occupy area, require power, and slow signal rates by increasing the input capacitance of the receiver. There is therefore a need for power and area-efficient receivers capable of filtering incoming signals based upon the most recently received symbol or symbols. Embodiments detailed below address this need.

FIG. **7** depicts an embodiment of an area and power-efficient decision-feedback equalizer (DFE) **700**. DFE **700** corrects an input signal Vin for ISI associated with multiple most-recent data bits in accordance with one embodiment. DFE **700** implements an M-tap filter using a series of analog adders **705** and **707**, a sampler **710**, and two finite impulse response (FIR) filters **720** and **722**, each of which may include one or a number of filter taps. Each of N multipliers within FIR **720** multiplies a historical data sample from sampler **710** by a corresponding filter coefficient. An analog adder **725** then sums the products from each tap within FIR **720** and feeds the resulting sum back to adder **707** via a first feedback path FB**1**. Filter **722** is coupled to the output of sampler **710** via filter **720** in this example, but may be otherwise coupled to the output of the sampler in other embodiments (e.g., via a series of N additional sequential storage elements).

FIR **722** may be operationally similar to FIR **720**. Each of one or a plurality of multiplies a historical data sample from FIR **720** by a corresponding one of filter coefficients $\alpha[N+1]$ through αM. An analog adder **727** then sums the products from each tap within FIR **722** and feeds the resulting sum back to adder **705** via a second feedback path FB**2**.

The sample or samples stored within FIR **720** are recent relative to those of FIR **722**. As such, DFE **700** therefore has less time to correct for the ISI effects associated with the samples of FIR **720**. To address this problem, a relatively fast first feedback path FB**1** may be provided from FIR **720** to analog adder **707**. A second, relatively slow feedback path FB**2** may then be used to apply feedback derived from the older samples of FIR **722**.

The second feedback path FB**2** may be speed constrained due to e.g. the physical proximity FIR **722** to adder **705** or to delays through amplifiers included in feedback path FB**2** or between adder **705** and sampler **710**. Dividing the FIR functionality between multiples sets of filter taps allows for the inclusion of feedback path FB**1**, which can be laid out and tuned for higher speed performance. For example, the faster feedback path FB**1** can use shorter wires, apply feedback to different points, or use faster, more power-intensive strategies.

FIG. **8** depicts a DFE **800** in accordance with another embodiment. DFE **800** implements an N-tap filter using an analog adder **805**, a one-tap PrDFE **810**, a split feedback path that includes a multiplier **815**, and a finite impulse response (FIR) filter **820**. PrDFE **810** includes a correction stage **825** that applies appropriate filter coefficients to generate two equalized signals, a first equalized signal Veq**1** for the case in which the preceding symbol represents a logic one and a second equalized signal Veq**0** for the case in which the preceding symbol represents a logic zero. Sample-and-select logic **830** samples both equalized signals Veq**1** and Veq**0** at the appropriate sample instant and then selects the corrected one of the two sampled values once the preceding symbol is resolved. Analog adder **805** adds the output of FIR filter **820** to the incoming signal Vin to compensate for the ISI associated with the third to the Nth preceding symbols. FIR filter **820** may be the same as or similar to FIR filter **720** of FIG. **7**, so a detailed discussion of FIR filter **820** is omitted for brevity. The feedback path through multiplier **815** is split to apply correction factor $\alpha 2$ to both feed-forward paths of correction stage **825**. Adders **840** and **845** introduce some signal-propagation delay in some embodiments, in which case applying correction factor $\alpha 2$ after adders **840** and **845** speeds the feedback path through multiplier **815** as compared with the feedback from FIR **820**. The feedback path from sample-and-select logic **830** can be applied elsewhere in other embodiments.

Correction stage **825** applies first-tap correction factors $+\alpha 1$ and $-\alpha 1$ to the signal from adder **805** via respective adders **840** and **845**. Multiplier **815** then applies a second-tap correction factor, the product of the previous sample and correction factor $\alpha 2$, to both of the sums from adders **840** and **845** via a second stage of adders **855** and **860** to produce alternative equalized signals Veq**1** and Veq**0**. Sample-and-select logic **830** then samples both of the alternative signals at the appropriate sample instant and, once the value of the preceding symbol is resolved, conveys the appropriate sampled value to FIR **820** and provides the actual output data.

The first tap of DFE **800** is implemented as a PrDFE because the feedback timing at the worst case process, voltage, and temperature (PVT) condition may exceed the minimum bit period. The feedback tap following PrDFE **810**, the second tap in this example, may also be timing critical. In accordance with this embodiment, multiplier **815** multiplies the resolved prior symbol at the output of sample-and-select logic **830** by the second filter coefficient $\alpha 2$. Adders **855** and **860** then add the resulting products to the output voltages from adders **840** and **845**. The second-tap feedback path, which includes multiplier **815** and adders **855** and **860**, bypasses FIR **820** and PrDFE adders **840** and **845**. As a result, the delay through the second-tap feedback path is significantly reduced in comparison to the first tap of FIR **820**. FIR **820** supports the remaining taps three to N.

FIG. **9** depicts an embodiment of an area and power-efficient receiver **900** that corrects for ISI associated with multiple most-recent data bits in accordance with another embodiment. Receiver **900** is AC coupled to a corresponding signal channel **905** via a pair of capacitors, but may be DC coupled in other embodiments, and may include one or more termination elements T. Receiver **900** optionally includes an analog continuous-time equalizer **910** with e.g. 16 steps of adjustments controlled by a control signal LEQ. Equalizer **910** amplifies signal RP/RN using a range of amplification factors, with higher frequency components typically being treated to higher amplification factors, to produce an equalized signal Vin. If the associated channel **905** exhibits a low-pass filter effect, then equalizer **910** may compensate for the disproportionate loss of high-frequency signals with a corresponding disproportionate gain. The degree to which equalizer **910** amplifies higher frequency signals relative to lower frequency signals can be adjusted via control signal LEQ. Equalizer **910** can thus be tailored to the characteristics of the associated channel and related components. Equalizer **910** may incorporate a variable-gain amplifier and suitable controls for e.g. gain matching and automatic gain control.

Receiver **900** includes a DFE **915** that in turn includes a pair of partial-response DFE (PrDFE) stages **920** and **930**. Of these, PrDFE stage **930** recovers data samples and PrDFE stage **930** recovers edge samples. Conventional clock-recovery circuitry **925** employs the recovered edge and data signals Edge and Data, and a reference clock signal Ckref, to recover a data-sample clock signal RCklD and an edge-sample clock signal RClkE. Clock recovery circuits are well known to those of skill in the art, so a detailed treatment of clock-recovery circuitry **925** is omitted for brevity.

DFE **915** provides two filter taps based upon tap coefficients $\alpha 1$ and $\alpha 2$. Receiver **900** additionally includes, in this embodiment, a finite-impulse response (FIR) filter **935** that

provides an additional eight filter taps, based upon tap coefficients α3-α10, to offset signal Vin based upon eight data symbols that precede those associated with tap coefficients α1 and α2. The resulting offset input signal Vin' is downstream from an adder **934** that applies the output from FIR **935** to input signal Vin. In other embodiments, DFE **915**, FIR **935**, or both may have more or fewer taps. It is also possible that PrDFEs **920** and **930** have different numbers of taps, or that the respective taps be based upon different prior symbols.

The first tap of PrDFE stage **930** is implemented as a partial-response ISI canceller because the worst-case feedback timing may exceed the minimum bit period, which is 156 ps (6.4 Gbps) in one embodiment. The second feedback tap may also be timing critical, and is integrated as part of PrDFE **930** in this example. FIR filter **935** directly applies the remaining eight taps to the input of PrDFE **930**, by current summing in one embodiment. The timing of the 3rd tap (the first tap in filter **935**) may also be critical at the worst case PVT corner, so that path should be considered carefully. A supply regulator or dedicated supply voltages, neither of which is shown, may be included where components of receiver **900** require supply voltages above the internal supply voltage Vdd to achieve a desired degree of linearity.

Filter **935** cancels the tap**3** to tap **10** ISI values at the input to DFE **915**, so the input Vin' to DFE **915** will ideally have the following form:

$$Vin'=rx(t)=\beta(tx(t)+\alpha 1tx(t-1)+\alpha 2tx(t-2)) \quad (1)$$

where tx(t) is the transmitted symbol, β is the DC attenuation of channel **905** and equalizer **910**, α**1** and α**2** are the ISI effects through channel **905** and equalizer **910** for first and second taps. PrDFE **930** implements the corrections for the last two terms of equation (1), the two most timing critical DFE tap corrections. Coefficients α**1** and α**2** of equation (1) represent the ISI effects through the channel, and are not to be confused with the like-identified tap values, or correction factors, used to counteract these effects. The magnitudes of the correction factors are selected to equal or approximate the ISI effects. In some embodiments the correction factors are added to the threshold level against which the incoming data is measured. In other embodiments, the correction factors are subtracted from the incoming data. Methods and circuits for deriving appropriate correction factors are detailed below.

PrDFE stage **930** implements the first tap using a feed-forward and select method. To accomplish this, PrDFE **930** includes two forward paths, one for each of the two possible symbol types (logic one and logic zero) in this binary system. With insufficient time to resolve the previous symbol before applying the appropriate correction to the incoming symbol, the first forward path applies the appropriate first-tap correction factor (coefficient α**1**) assuming the previous symbol PS was a logic one, while the second forward path applies the appropriate first-tap correction factor (coefficient −α**1**) assuming the previous symbol PS was a logic zero. A pair of samplers **950** and **965** then samples each of the resulting two corrected signals. Finally, some sample-select logic, in this case a multiplexer **936**, passes one of the samples from samplers **950** and **965** to a storage element **937** based upon the resolution of the previous symbol PS. Only two forward paths are used in this embodiment, but other embodiments, such as those receiving multiple-amplitude (multi-PAM) signals or those using multiple stages of PrDFE to resolve more than one previous symbol, may include additional forward paths.

In the first forward path of PrDFE stage **930**, a series of analog adders **940** and **945** precede sampler **950**. Likewise, in the second forward path, a series of analog adders **955** and **960** precede sampler **965**. Adders **940** and **955** may be implemented as gain stages and/or wire-or summers. A feedback path from storage element **937** and common to both forward paths includes a coefficient multiplier **970** coupled between the output of PrDFE stage **930** and each of adders **945** and **960**. In other embodiments the output from storage element **937** extends to two coefficient multipliers, one for each of adders **950** and **960**.

As noted above, the first forward path applies the appropriate correction (+α**1**) assuming the previous symbol was a logic one, while the second applies the appropriate correction (−α**1**) assuming the previous symbol was a logic zero. Multiplexer **936** then excludes the erroneous sample when the preceding symbol PS is resolved. (Methods of making preceding symbols available to PrDFE stages in double-data-rate embodiments are explained below in connection with FIGS. **12-15**.) The feedback path that includes multiplier **970** is applied to both forward paths to compensate the incoming symbol for ISI associated with the symbol PPS just prior to the prior symbol, which is available at the output of PrDFE **930**. The product of the data sample from storage element **937** and second-tap coefficient α**2** is applied to an addend input of each of adders **945** and **960**. Adders **945** and **960** may be implemented as e.g. gain stages and/or wire-or summers. The feedback path from storage element **937** to adders **945** and **960** allows the second tap to bypass FIR **935**, and consequently to expedite application of the second-tap correction factor. The second tap equalization can therefore be applied faster than the first tap of FIR **935**.

The delay between the output of PrDFE stage **930** and the input terminals of samplers **950** and **965** should be, in this embodiment, less than one symbol time as required to meet the set-up time of samplers **950** and **965**. Extensions to quad data rate (QDR) or other rate schemes simply extend the parallelism to reduce clock frequency and can be easily understood by someone skilled in the art. Filter **935** includes a series of sequential storage elements, the contents of which are weighted by corresponding tap coefficients α**3**−α**10** and added to the input of PrDFE stage **930**.

Edge PrDFE stage **920** is similar to Data PrDFE stage **930**, but the clock signal RClKE used by PrDFE stage **920** is timed to sample edges of the incoming data. The sampled edges Edge and sampled data Data are conveyed to clock-recovery circuitry **925**, which uses the edge and data samples to synchronize sample clocks RClkD and RClkE to the incoming data from channel **905**. The resulting recovered clock signals RClkD and RClKE are then used to time Data PrDFE stage **930** and Edge PrDFE stage **920**, respectively. Clock recovery based on sample edges is well known, so a detailed discussion of clock-recovery circuitry **925** is omitted for brevity. Other embodiments may not capture timing information from incoming data signals, and may thus dispense with edge samplers and clock-recovery circuitry.

FIG. **10** schematically depicts equalizer **910** of FIG. **9** in accordance with one embodiment. Equalizer **910** includes two nearly identical stages **1000** and **1005**, the second of which is depicted as a black box for ease of illustration. Other embodiments include more or fewer stages. Equalizer stage **1000** includes a pair of differential input transistors **1015** and **1020** with respective loads **1025** and **1030**. Source degeneration is provided by a resistor **1035**, a transistor **1040**, and a pair of capacitor-coupled transistors **1045** and **1050**. The capacitance provided by transistors **1045** and **1050** is in parallel with resistor **1035** and transistor **1040**, so the net impedance between the sources of transistors **1015** and **1020** decreases with frequency. As a consequence, the gain of equalizer stage **1000** increases with frequency. The resistance through transistor **1040** can be adjusted to change the source-

degeneration resistance, and thus to alter the extent to which the gain of equalizer stage **1000** increases with frequency.

In an alternative embodiment, source degeneration is provided by one or more floating metal-insulator-metal (MIM) capacitors connected in parallel with resistor **1035**. The MIM capacitors can be used instead of or in addition to capacitors **1045** and **1050**. Other control mechanisms might also be used to alter the source-degeneration resistance, as by digitally switching in different sizes and combinations of resistors and capacitors.

A DAC **1055** converts the digital equalization setting Eq[**5**:**0**] from e.g. controller **120** of FIG. **1** to a gate voltage for transistor **1040**. The value of the equalization setting thus determines the resistance between the drains of transistors **1015** and **1020**, and consequently the shape of the gain curve of equalizer stage **1000**. In general, the higher the resistance between the sources of transistors **1015** and **1020**, the more extreme the gain curve of stage **1000** over the frequency range of interest. In one embodiment, the output voltage from DAC **1055** decreases as setting Eq[**5**:**0**] increases from 000000 to 100000, remaining constant for higher counts. These maximum counts represent the highest resistance between the sources of transistors **1015** and **1020**, and consequently the maximum equalization for stage **1000**. The output voltage from a similar DAC (not shown) in stage **1005** remains high for counts up to 100000, decreasing count-by-count for higher values. Thus, the lowest equalization setting (Eq[**5**:**0**] =000000) represents the lowest source-degeneration resistance for both stages **1000** and **1005**, while the highest equalization setting (Eq[**5**:**0**]=111111) represents the highest.

FIG. **11** schematically depicts a bias-voltage generator **1100** for use with equalizer **910** of FIGS. **9** and **10**. A resistor **1105** and transistors **1110** and **1115** form a half-circuit replica of equalizer stage **1000**, with the input common-mode voltage Vin_com applied to the gate of transistor **1110**. A feedback loop including an amplifier **1120** and a pair of transistors **1125** and **1130** sets the voltage on the inverting (−) terminal of amplifier **1120** equal to the voltage applied to the non-inverting (+) terminal. In an embodiment in which supply voltage Vdd is 1.2 volts, a resistor divider provides one volt to the non-inverting terminal of amplifier **1120**. The resulting bias voltage Vbias to stages **1000** and **1005** establishes a one volt common-mode voltage for those stages. In some embodiments, lower common-mode voltages are avoided to ensure that transistors **1015** and **1020** of FIG. **10** are always in saturation. The half circuit of FIG. **11** can be scaled down, by a factor of eight in one example, to save power.

FIG. **12** depicts a receiver **1200** in accordance with one double data rate (DDR) embodiment that recovers timing information from the incoming data. Receiver **1200** includes a PrDFE **1205** and an FIR **1210**. PrDFE **1205** separately captures even data DataE and odd data DataO using respective Even and Odd data-sampler stages **1215** and **1220**, and separately captures even edges EdgeE and odd edges EdgeO using respective Even and Odd edge sampler stages **1225** and **1230**.

The operation of data sampler **1220** and edge sampler stage **1225** are detailed below in connection with FIGS. **13**A and **13**B: the operation of the remaining samplers is similar, and so is omitted for brevity. PrDFE **1205** compensates for the ISI associated with the two most recently received symbols; FIR **1210** compensates input signal Vin for the ISI associated with eight additional symbols resolved before the most recent two.

Odd data sampler stage **1220** includes sampling switch **1232** controlled by an odd-data clock Ck_dO (for "clock-data-odd") and two feed-forward paths to some sample-select logic, a multiplexer **1234** in this example. Sampling switch **1232** may be realized by any number of suitable methods well known by those versed in the art of sample-and-hold design. Sampling switch **1232** allows more time for feedback to settle, and is omitted in other embodiments. Each feed-forward path includes, in this embodiment, a respective "twist" amplifier **1235**/**1236**, an analog adder **1238**/**1240**, and a sampler **1242**/**1244**. A coefficient multiplier **1246** common to both feed-forward paths is disposed between the output of multiplexer **1234** and each of adders **1238** and **1240**. In this DDR embodiment, the timing requirements for the feedback path used to implement the second tap are relaxed because the incoming data is divided into two paths, odd and even, each operating at half the rate of the incoming data.

Sampling switch **1232** samples input signal Vin' on the rising edges of clock signal CkdO; the sampled voltage is held between clock edges. Summing twist amplifiers **1235** and **1236** sum the input signal with a reference (voltage or current) that can be adjusted, or "twisted," to change the way the input signal is interpreted. Tap coefficient α**1** is applied to the reference terminal of amplifier **1235**, where α**1** is the appropriate correction factor if the preceding data symbol was a logic one; tap coefficient −α**1** is applied to the reference terminal of amplifier **1236**, where −α**1** is the appropriate correction factor if the preceding data symbol was a logic zero. The resulting corrected signals V**1**+ and V**1**− are presented to respective adders **1238** and **1240**.

Multiplier **1246** multiplies the preceding data symbol on the output of multiplexer **1234** by coefficient α**2**: adders **1238** and **1240** add the resulting product to each of voltages V**1**+ and V**1**− to produce corrected signals V**2**+ and V**2**−. Samplers **1242** and **1244** then sample both of analog signals V**2**+ and V**2**− on a rising edge of a delayed data clock signal $Ck_{dd}O$ delayed sufficiently from clock signal CkdO to allow the feedback from multiplier **1246** to adjust the voltage on nodes V**2**+ and V**2**−. In other embodiments, the clock used to time samplers **1242** and **1244** has a different fixed or variable phase relationship with respect to clock signal CkdO.

Samplers **1242** and **1244** sample the equalized signals V**2**+ and V**2**− to produce logic signals d+ and d− on the input nodes of multiplexer **1234**. Multiplexer **1234** then selects one of signals d+ and d− based upon the immediately preceding symbol as resolved by even data sampler stage **1215**. If the immediately preceding data symbol was a logic one, then multiplexer **1234** selects signal d+; conversely, if the immediately preceding data symbol was a logic zero, then multiplexer **1234** selects signal d−.

FIG. **13**A is a waveform diagram **1300** depicting the operation of odd data sampler **1220** of FIG. **12**. Input signal Vin' is represented as a series of data symbols tx**0**-tx**7**, the timing of which is measured with respect to time t=0, the sample time of interest. In general, data sampler **1220** resolves a given data symbol only after the two preceding symbols are resolved. In the example of FIG. **13**A, symbol tx**3**, sampled at time t=0, is resolved as odd data D**3** after the immediately preceding symbols tx**2** and tx**1** are resolved as data symbols D**2** and D**1**, respectively.

First, at time t=0, sample switch **1232** samples the voltage on line Vin'. Summing twist amplifier **1235** adds the sampled voltage to correction factor α_1 to provide a first intermediate voltage V**1**+. Intermediate voltage V**1**+ is the symbol tx**3** corrected for the ISI associated with symbol tx**2**, assuming symbol tx**2** is representative of a logic one. The corresponding intermediate voltage V**1**− in the second feed-forward path is the symbol tx**3** corrected for the ISI associated with symbol tx**2**, assuming symbol tx**2** is representative of a logic zero. Next, adders **1238** and **1240** add to respective voltages V**1**+ and V**1**− the product of correction factor α**2** and the resolved

prior odd data symbol D1 from the output from multiplexer **1234**. Alternatively, this same function can also be realized with summing twist amplifiers as well.

Voltages V2+ and V2− to respective samplers **1242** and **1244** represent two interpretations of symbol tx3. Voltage V2+ is corrected for the two preceding data symbols based upon the assumption that the immediately preceding data symbol D2 represented a logic one, while voltage V2− was similarly corrected based upon the assumption that the immediately preceding data symbol was a logic zero. Samplers **1242** and **1244** respectively sample voltages V2+ and V2− on the next rising edge of odd data clock $Ck_{dd}O$, a slightly delayed version of odd data clock Ck_dO. Outputs d+ and d− are logic signals, only one of which is a sampling of the properly corrected symbol.

The input terminals of multiplexer **1234** are respectively coupled to the output terminals of samplers **1242** and **1244**. Multiplexer **1234** can thus select from signals d+ and d−. The select terminal of multiplexer **1234** is coupled to the output terminal of even data sampler stage **1215**, which resolves the even data symbols immediately preceding each odd data symbol. Multiplexer **1234** thus selects the correct one of samples d+ and d− as soon as symbol D2 is resolved. Sampler stage **1220** thus produces data D3 when both samples d+ and d− are settled and even stage **1215** has resolved data sample D2. Even data stage **1215** operates in the same fashion as odd data stage **1220**, except that the data sample immediately preceding each even data symbol is provided by odd data stage **1220**, and the data sample immediately preceding the odd data sample is provided by the output of even data stage **1215**.

Even edge sampler stage **1225**, the topmost stage in FIG. **12**, includes a sampling switch **1250** controlled by an even-edge clock Ck_eE (for "clock-edge-even"), and two feed-forward paths to a multiplexer **1252**. Each feed-forward path includes a respective summing "twist" amplifier **1254/1256**, an adder **1258/1260**, and a sampler **1262/1264**. A pair of coefficient multipliers **1266** and **1268** common to both feed-forward paths are disposed between the respective outputs of odd and even data samplers **1220** and **1215** and each of adders **1258** and **1260**. As explained below, the feedback provided to adders **1258** and **1260** is based upon an assumption that the ISI associated with a given edge will be an average of the ISI associated with the two symbols adjacent the edge. This feedback is therefore based upon even and odd data samples from stages **1215** and **1220**.

FIG. **13**B is a waveform diagram **1305** depicting the operation of even edge sampler stage **1225** of FIG. **12**. As in FIG. **13**A, input signal Vin' is represented as a series of data symbols tx**0**-tx**7**, the timing of which is measured with respect to time t=0. Edge sampler stage **1225** samples symbol edges to recover information about the timing of signal Vin', however, so the sample instants occur at the symbol boundaries (e.g., t=½). The following discussion details the resolution of the sample value E**23**, which is a sample of the edge that occurs between symbols tx**2** and tx**3** at time t=½.

Sampler stage **1225** compensates for ISI resulting from two prior edge samples, those that occur at times t=−½ and t=−½. An assumption is made that the ISI associated with a given edge will be an average of the ISI associated with the two adjacent symbols. Thus, for example, the ISI associated with the sample edge at t=−½ is assumed to be the average of the ISI induced by symbols tx**1** and tx**2**, and the ISI associated with the sample edge at t=−1½ is assumed to be the average of the ISI induced by symbols tx**0** and tx**1**. Calculating the edge voltage Ve thus requires the resolution of three prior data symbols, one more than was needed to resolve data in the example of FIG. **13**A. Also important, because edge sampler stage **1225** occurs only half of a symbol period from the most recent data sample, edge sampler stage **1225** has less time to resolve the immediately preceding data symbol than does sampler **1220**.

Sampling switch **1250** samples input signal Vin' on the rising edges of clock signal Ck_eE; the sampled voltage is held between samples using standard techniques. Summing twist amplifiers **1254** and **1256** compare the sampled input signal with a reference (voltage or current) that can be adjusted to change the way the input signal is interpreted. Tap coefficient $\alpha_1/2$ is applied to the reference terminal of amplifier **1254**, where $\alpha_1/2$ is the appropriate correction factor if the preceding data symbol tx**2** was a logic one; tap coefficient $-\alpha_1/2$ is applied to the reference terminal of amplifier **1236**, where $-\alpha_1/2$ is the appropriate correction factor if the preceding data symbol tx**2** was a logic zero. The resulting pair of corrected signals is then presented to respective adders **1258** and **1260**.

Multiplier **1266** multiplies odd data D**1** from sampler **1220** by half the sum of coefficients α_1 and α_2, and multiplier **1268** multiplies even data D**0** from sampler **1215** by half of coefficient α_2. Voltages V**3**+ and V**3**− at the inputs of respective samplers **1262** and **1264** are thus corrected for the ISI attributable to symbols D**0** and D**1** before the next rising edge of delayed odd-data clock $Ck_{dd}O$. Samplers **1262** and **1264** output edge samples e+ and e−, one of which is a sample of the appropriately corrected edge sample. Multiplexer **1252** selects the correct one of edge samples e+ and e− based upon the resolution of prior sample D**2** when that symbol is available from sampler **1215**.

Turning to FIG. **13**B, the following describes the resolution of edge data E**23**, which takes place at time t=½, taking into account the ISI from symbols tx**0**, tx**1**, and tx**2**. Data D**0** is resolved as of the sample instant t=½, so signals V**3**+ and V**3**− (collectively V**3**±) are promptly corrected for the ISI associated with D**0** (arrows **1310** and **1315**). Prior to this correction, voltages V**3**± are shaded to identify those portions of the signals as invalid. The next prior symbol resolved, data D**1**, becomes available while data D**0** is still valid. Multiplier **1266** (FIG. **12**) therefore provides the appropriate product to adders **1258** and **1260** before the rising edge of clock signal $Ck_{dd}O$ (arrow **1320**). The voltages sampled by samplers **1262** and **1264** are therefore correctly compensated for the ISI produced by data D**0** and D**1**. The captured logic levels are represented in FIG. **13**B as two symbols ±e**23**, one sample for each of the two data values for the preceding data sample D**2**. Finally, when sample D**2** is resolved, multiplexer **1252** transmits the correct one of the two corrected edge samples as sample edge E**23** (arrow **1325**).

The foregoing discussion details how receiver **1200** treats the incoming signal to cancel the ISI associated with the two most recently received data bits. FIR **1210** conventionally calculates the ISI for eight additional bits and subtracts the resulting value from input terminal Vin. Briefly, FIR **1210** stores eight resolved data symbols, four odd and four even, in a shift register. In one embodiment a digital multiplier associated with each bit of the shifter register multiplies the stored bit by a corresponding one of eight coefficients α**3**-α**10**, and digital adders sum the resulting products and apply the resulting sum, via a digital-to-analog converter (DAC), to an analog adder **1270**. Adder **1270** combines an incoming signal Vin with the output from FIR **1210** to produce a corrected version of the signal Vin' on the input nodes of stages **1215**, **1220**, **1225**, and **1230**. In another embodiment analog summing is used to add eight independent DAC inputs to node Din. An adjustable delay line can be included to adjust the delays from clock signals CkdE and CkdO to center the output of FIR **1210** in the incoming data eyes and counteract inherent clock-

to-Q delays and set-up times. In the example, FIR **1210** includes a multiplexer that combines the two half-data-rate signals DataE and DataO into set of registers operating at the full data rate. FIR **1210** can also be implemented using two half-data-rate registers with outputs combined into a full data-rate signal for application to the DAC.

FIG. **14** depicts a receiver **1400** in accordance with a second DDR embodiment that recovers timing information from an incoming signal Vin. Receiver **1400** is similar to receiver **1200** of FIG. **12**, and includes an even-edge sampler stage **1405**, an even-data sampler stage **1410**, and odd-data sampler stage **1415**, and an odd-edge sampler stage **1420**. Receiver **1400** can include additional taps, as by inclusion of FIR **1210** of FIG. **12**, for example, but these are omitted from FIG. **14**. Receiver **1400** employs eight alpha values for the first filter tap, two for each of the four sampler stages **1405**, **1410**, **1415**, and **1420**. The naming convention for the alpha values identifies a value's use in receiver **1400**: for example, the symbol $+\alpha_d E$ may be interpreted as the tap value "plus-alpha-data-even," which identifies that symbol as the $+\alpha 1$ value for the data sampler stage for even data.

Receiver **1400** is operationally similar to receiver **1200** of FIG. **12**, so a detailed discussion of FIG. **14** is omitted. Of interest, receiver **1400** does not use a sample-and-hold strategy for capturing incoming data, and consequently omits sample switches (e.g., **1250** and **1232** of FIG. **12**). The edge sampler stages need not await resolution of the tx(t−2) bit because they do not use feedback to correct for ISI associated with the tx(t−2) bit. There are three potential ISI components for sampled edges, which are discussed below in connection with FIG. **21**. The edge sampler stages each employ two feed-forward paths to correct for two of these ISI components. Additional select logic downstream from receiver **1400** then excludes from consideration edge samples associated with data patterns that produce the third ISI component.

The absence of sample switches changes the timing of the signal paths through receiver **1400** as compared with receiver **1200**. Additional changes include sequential multiplexers **1425** in each of data-sampler stages **1410** and **1415**, sequential storage elements **1430** coupled to the input terminals of the multiplexer in each of edge-sampler stages **1405** and **1420**, and sequential storage elements **1435** downstream of each multiplexer within each sampler stage. These sequential elements align the data and edge samples to facilitate filtering in the manner detailed above in connection with FIGS. **13**A and **13**B. Functional and timing differences between receivers **1400** and **1200** will be evident to those of skill in the art, so a detailed treatment of FIG. **14** is omitted for brevity.

Receiver **1400** supports a low-power mode that can be used for relatively relaxed channel conditions and lower speed. Asserting a signal LowP places receiver **1400** in the low-power mode by turning off half the feed-forward paths. Asserting signal LowP deactivates both the analog and sequential stages in one feed-forward path and fixes the associated output multiplexer to select the active feed-forward path. In some embodiments, each feed-forward path can be turned off independently using e.g. dedicated registers to provide test flexibility, to facilitate experimentation, and to allow for optimization of power and performance modes.

FIG. **15** depicts a receiver **1500** in accordance with a third DDR embodiment that recovers timing information from the incoming signal. Receiver **1500** is similar to receivers **1200** and **1400** of FIGS. **12** and **14**, respectively, and includes an even-edge sampler stage **1505**, an even-data sampler stage **1510**, an odd-data sampler stage **1515**, and an odd-edge sampler stage **1520**. Receiver **1500** can include additional taps, as by inclusion of FIR **1210** of FIG. **12**, for example, but these are omitted here.

Receiver **1500** is operationally similar to receiver **1400** of FIG. **14**. The multiplexer of the edge sampler stages are omitted in receiver **1500**, however, and a third feed-forward path is included in each of the two edge-sampler stages **1505** and **1520**. Considering even edge sampler stage **1505**, each of the three feed-forward paths includes a series of sequential storage elements timed to the even edge clock CkeE. Sampler stage **1505** corrects for each of three potential ISI components for sampled edges using the three separate paths. Additional select logic downstream from receiver **1500**, embodiments of which are discussed below in connection the FIGS. **16** and **17**, monitors incoming data patterns and selects edge samples appropriate for specific received data patterns.

Even-edge sampler stage **1505** produces, for each sampled edge, a first edge sample EdgeNE for the possibility that the two preceding data symbols represented a logic zero and the present data symbol is a logic one, a second edge sample EdgeZE for the possibility that the two preceding data symbols are either zero/one or one/zero and the present symbol is opposite the preceding symbol, and a third edge sample EdgePE for the possibility that the two preceding data symbols represented a logic one and the present symbol is a logic zero. The downstream sample-exclusion logic noted above then considers the appropriate one of the three edge samples based upon the received data pattern to adjust the sample timing as needed.

Receiver **1500** may support a low-power mode. In the depicted example, asserting a signal LowP disables two of the three feed-forward paths in each edge-sampler stage and disables one feed-forward path in each data-sampler stage. Other embodiments provide additional flexibility by allowing various combinations of the feed-forward paths to be enabled. A sufficient performance level might be obtained, for example, when only one feed-forward path is enabled in each edge-sampler and both feed-forward paths are enabled in the data-sampler stages. Many permutations are possible. Odd-edge sampler stage **1520** is operationally similar to stage **1505**, so a detailed treatment of stage **1520** is omitted for brevity.

FIG. **16** details clock recovery circuitry **1600** for use with receiver **1500** of FIG. **15**. Clock recovery circuitry **1600** includes even-sample select logic **1605**, odd-sample select logic **1610** and a clock recovery block **1615**. Select logic **1605** and **1610** each consider the incoming data patterns on lines DataE and DataO to determine which, if any, of the three respective edge samples should be used for timing recovery. Data patterns for which the two most-recent bits are the same are not indicative of edges, and so are to be excluded. In one embodiment, for example, select logic **1605** selects EdgeNE for EdgeE when the preceding three bits are 001 (i.e., $D_{N-2}=0$, $D_{N-1}=0$, and $D_N=1$), selects EdgePE for EdgeE when the preceding three bits are 110, and selects EdgeZE when the preceding three bits are representative of either 010 or 101. Other embodiments may use different preceding data patterns as selection criteria. Phase updates by clock recovery block **1615** may thus be based upon a selected subset of sampled edges. Select logic **1605** and **1610** are configurable in some embodiments, for example to consider different data patterns or all or a subset of the incoming edge samples (e.g., select logic **1605** might consider only edge samples EdgeZE and EdgePE). Other embodiments omit or power down one or more feed-forward paths: returning to FIG. **15**, the uppermost feed-forward path of even-edge sampler stage **1505** can be omitted or disabled if data pattern 001 is to be ignored. Other

embodiments might benefit from additional feed-forward paths, such as to allow for consideration of multi-level signals or multi-symbol PrDFE.

Clock recovery circuitry **1600** receives all of the data and edge values from receiver **1500**. In one embodiment, select logic **1605** and **1610** and clock recovery block **1615** ignore samples of edges for which the two preceding data symbols differed. Clock recovery circuitry **1600** thus adjusts the timing of recovered clock signals Ck_eE, Ck_dE, Ck_dO, and Ck_eO based only upon the data patterns 001 and 110. Timing adjustments may be limited to other received patterns or combinations of patterns in other embodiments. Excluding some edge data reduces the tracking bandwidth of clock recovery block **1615** but reduces the requisite number of feed-forward paths in the edge samplers, so it may be important to balance edge filtering with the data-recovery needs of a particular system.

FIG. **17** depicts an embodiment of clock recovery block **1615**, which is of a well-known type and is thus not described in detail. In brief, a phase controller **1700** receives data samples DataE and DataO and edge samples EdgeE and EdgeO from the edge samplers as filtered by select logic **1605** and **1610**. Based on these samples, phase controller **1700** determines that the sample clocks are early or late with respect to the incoming signal, and correspondingly adjusts the sampling phases provided by a phase mixer **1705**, which combines selected ones of a plurality N of differently phased reference clocks from a phase-locked loop (PLL) **1710**. As noted above, the timing adjustments may be limited to selected received data patterns. Other well known clock recover techniques may be used with e.g. receivers **1200**, **1400**, and **1500** in other embodiments.

FIG. **18** depicts an embodiment of an even data sampler stage **1800** in accordance with another DDR embodiment. Stage **1800** is similar to stage **1410** of FIG. **14**, and sampler stages like stage **1800** can be used in place of the odd and even sampler stages of FIG. **14**. For brevity, only the even data sampler is detailed here. Configuring sampler stage **1800** for use in extracting odd-data and edge samples is well within the ability of those of skill in the art.

Sampler stage **1800** includes three feed-forward paths, each of which includes a twist amplifier **1805**, an adder **1810**, and a sampler **1815**. A three-input multiplexer **1820** selectively gates the output of one of samplers **1815** to output port DataE via an RS latch **1835** and a pair of flip-flops **1840** and **1845**. A feedback path extends from the output of latch **1835** to each adder **1810** via a coefficient multiplier **1850**.

Ignoring for the moment the middle feed-forward path, which provides a test signal DT to multiplexers **1820** and **1865**, sampler stage **1800** implements two taps of a DFE in the manner detailed above in connection with FIGS. **9** through **15**. Briefly, the first tap of stage **1800** is implemented as a PrDFE because the feedback timing path may exceed the minimum bit period. Correction factor $+\alpha_dE$ should be applied if the preceding bit was a logic one, whereas correction factor $-\alpha_dE$ should be applied if the preceding bit was a logic zero. Without sufficient time to resolve the previous bit, stage **1800** applies both correction factors $+\alpha_dE$ and $-\alpha_dE$ to the incoming signal Vin'. Multiplexer **1820** then selects the correct one of the two resulting signals once the previous odd data bit is resolved by the associated odd data sampler stage. The odd data sampler stage is not depicted in FIG. **18**, but the output signal DataO' from such a stage is shown as a control input to multiplexer **1820**. The second feedback tap, which applies correction factor $\alpha 2$, is taken from the output of latch **1835** and applied to adders **1810**.

The middle feed-forward path and separated controls signals /SD+ and /ST are included, in this embodiment, to facilitate testing and the derivation of correction factors $+\alpha_dE$ and $-\alpha_dE$. In testing, the middle sampler **1815** can be substituted for either of the other samplers, enabling test engineers to isolate faults and otherwise analyze system performance. In support of this substitution, multiplexer **1820** includes three additional select terminals /SD+, /SD−, and /ST. The effects of these signals are detailed below in connection with FIG. **19**. The middle sampler **1815** can also be used by embedded logic or software associated with the communication channel. Such embedded logic or software can periodically or continuously monitor channel performance and adjust the receiver as needed to adjust a number of metrics of interest, such as to maintain a desired level of speed performance, a minimum error rate, or both.

In support of both testing and the derivation of correction factors, the twist amplifier **1805** of the middle path receives a test correction factor α_tE that can be adjusted independent of correction factors $+\alpha_dE$ and $-\alpha_dE$. This allows test engineers to explore the voltage margin for a given incoming signal Vin'. Further, the provision of an extra feed-forward path with a variable test correction factor α_tE allows stage **1800** to adaptively explore the characteristics of incoming data to refine the values of correction factors $+\alpha_dE$ and $-\alpha_dE$. These values can be set once, such as at start up, or can be continuously or periodically updated to reflect changes in the system noise environment, the supply voltage, temperature, etc.

Stage **1800** additionally includes embodiments of a data-edge level detector **1860** and an adaptive module **1862** that may be used to explore the boundaries (e.g. timing and voltage) of incoming signal Vin' for test and to adaptively refine correction factors $+\alpha_dE$ and $-\alpha_dE$. Level detector **1860** includes a three-input multiplexer **1865**, a latch **1870**, and a pair of flip-flops **1875** and **1880**. Multiplexer **1865** conveys one of the three output signals D+, DT, and D− from samplers **1815** to latch **1870** as directed by a two-bit sampler-select signals SS[**0**:**1**]. In normal operation, multiplexer **1820** alternatively selects signals D+ and D− at the direction of signal DataO'. Level detector **1860** can be constantly or periodically enabled during such times to convey signal DT from sampler **1800** as an edge-data level signal Edlev. As detailed below in connection with FIG. **21**, signal Edlev may be used in the derivation of correction factors $+\alpha_dE$ and $-\alpha_dE$. Multiplexer **1865** may select one of its other inputs D+ or D− for test purposes, and may be omitted if such testing flexibility is not required. An embodiment of adaptive module **1862** is detailed below in connection with FIG. **23**. Multiplexer **1865** may also select one of inputs D+ and D− when the sampler that sources the selected signal is replaced, using multiplexer **1820**, with the middle sampler **1815**. The ability to substitute signal DT for either of signals D+ or D− allows the data samplers to be offset-calibrated during live operation.

FIG. **19** depicts sampler stage **1800** in accordance with one embodiment. FIG. **19** details multiplexer **1820** and omits level detector **1860**. Multiplexer **1820** is, in this embodiment, made up of three separate two-input multiplexers **1900**, **1905**, and **1910**, and is responsive to four select signals /SD+, SD−, /ST and DataO'. The first two multiplexers **1900** and **1905** select from among signals D+, D−, and DT to produce alternative even data samples DE+ and DE−. The third multiplexer **1910** selects between samples DE+ and DE− at the direction of the last resolved data symbol of signal DataO' in support of PrDFE operation.

Turning to multiplexers **1900** and **1905**, asserting signal /SD+ (driving it low) causes multiplexer **1900** to select output D+, whereas asserting signal /ST causes multiplexer **1900** to select output DT. Similarly, asserting signal /SD− (driving it low) causes multiplexer **1905** to select output D−, whereas

asserting signal /ST causes multiplexer **1905** to select output DT. Multiplexer **1820** is thus capable of substituting the middle feed-forward path (DT) in lieu of either of the other feed-forward paths. Providing each of multiplexers **1900** and **1905** with two select terminals allows them to reduce glitches that result when switching between feed-forward paths. In switching multiplexer **1900** from DT to D+, for example, signal /SD+ can be asserted before signal /ST is deasserted such that output signal DE+ is derived for a time from both input signals to multiplexer **1900**. Signal /ST can then be deasserted to complete the switch.

The speed at which feedback can be provided for tap value α**2** and any other downstream filter taps (e.g., α**3**-αN) depends in part upon the speed at which samplers **1815**, multiplexers **1900**, **1905**, and **1910**, and latch **1835** convey and select signals. Some embodiments employ dynamic logic circuits that expedite signal transmission through these elements.

FIG. **20**A details embodiments of the topmost sampler **1815** of FIGS. **18** and **19** and the associated multiplexer **1900** instantiated as cascaded dynamic logic circuits, or "Domino logic," for improved speed performance. Sampler **1815** is essentially a sense amplifier, the differential outputs of which are pre-charged high when clock signal ϕ is low. Clock signal Ck_dE is differential in this embodiment, with clock signals ϕ and /ϕ representing the two differential components. Sampler **1815** and multiplexer **1900** together form a type of Domino logic circuit.

Sampler **1815** includes respective precharge and evaluate sections **2000** and **2005**. When clock signal ϕ is low, precharge section **2000** pulls both output nodes D+(n) and D+(p) toward the upper supply voltage (e.g., Vdd) on the respective power-supply terminal. Then, when clock signal ϕ goes high, evaluate section **2005** pulls one of output nodes D+(n) and D+(p) low in response to the differential input signal dp/dn from e.g. the corresponding one of adders **1810**. Precharge section **2000** returns nodes D+(n) and D+(p) to their high precharge state when clock signal ϕ returns low.

Multiplexer **1900** includes respective evaluate and precharge sections **2010** and **2015**. Evaluate section **2010** receives differential signals D+(n) and D+(p), collectively D+, from the corresponding sampler **1815** of stage **1800** (FIG. **18**), and receives a similar set of differential signals DT(n) and DT(p), collectively DT, from the sampler **1815** of the middle feed-forward path of stage **1800**. Evaluate section **2010** includes two differential input stages, one for each of differential signal pairs D+(n)/D+(p) and DT(n)/DT(p). Additional input stages can also be included to increase the number of available input ports.

When clock signal /ϕ is high (i.e., clock signal ϕ is low), precharge section **2015** pulls both output nodes DE+toward the lower supply voltage (e.g. Vss) on the respective power-supply terminal. Asserting one of select signals /SD+ and /ST enables the respective differential input signal to convey either signal D+ or DT as differential output signal DE+ to multiplexer **1910** of FIG. **19**. Latch **1835**, also of FIG. **19**, may be implemented in standard CMOS logic to convert the resolved data signal to a single-ended or differential sequential logic signal. As noted in connection with FIG. **19**, both signals /SD+ and /ST can be enabled simultaneously to support make-before-break switching between samplers.

FIG. **20**B depicts three samplers **2050** operatively coupled to multiplexers **1900**, **1905**, and **1910** of FIG. **19**. Samplers **2050**, one of which is shown in detail, may be used in place of samplers **1815** of FIG. **20**A. As compared with samplers **1815**, each of samplers **2050** includes a number of additional PMOS transistors that increase the speed at which the sampler precharges its output nodes, and cross-coupled NMOS transistors to prevent current flow once the sampling operation is complete.

Multiplexer **1905** may be identical at the transistor level to multiplexer **1900**, so a detailed treatment of multiplexer **1905** is omitted. Multiplexer **1910** may also be implemented in dynamic logic, though the sense of the evaluate and precharge stages would be inverted as compared with multiplexer **1900** to facilitate Domino cascading. With reference to FIG. **18**, multiplexer **1865** may be implemented using dynamic logic like multiplexers **1900**, **1905**, and **1910**, though the absence of PrDFE functionality reduces the requisite select speed and therefore allows for configurations that offer lower speed performance.

FIG. **21** illustrates the bimodal distribution of a binary signal observed at a signal receiver when the primary source of ISI is the signal transmitted in the immediately preceding symbol time (or, after all other significant sources of ISI have been corrected, e.g. by DFE). That is, the symbol sampled at time T_{N-1} is the primary source of ISI in the symbol sampled at time T_N; the symbol sampled at time T_N is the primary source of ISI in the symbol sampled at time T_{N+1}; and so forth. Referring to the signal levels at time T_N, it can be seen that if the preceding symbol was a logic '1' (i.e., $D_{N-1}=1$), the partial response to the preceding symbol will raise the signal level at time TN to one of the circled levels. If the preceding symbol was a logic '0' (i.e., $D_{N-1}=0$), , the partial response to the preceding symbol will lower the signal level at time TN to one of the square-designated levels. These levels may be defined for either single-ended or differential signals. In a non-PrDFE signaling system, the incoming signal is sampled and compared with a reference voltage level at the midpoint between the steady state extremes (i.e., midway between the '11' and '00' signal levels). Accordingly, the worst case voltage margins (i.e., smallest voltage differences between the signal and reference voltage) occur when the signal transitions from a '1' to a '0' or vice-versa; the '10' and '01' signaling levels become indistinguishable when the partial response level (i.e., residual signal level from the preceding symbol transmission) is large.

FIG. **21** depicts an edge-sample instant at time $T_{N+1/2}$. Returning to receiver **1500** of FIG. **15**, edge sampler **1505** considers four possible types of signal edges by application of three threshold values $+\alpha_e E$, αZE, and $-_e E$. Of these, threshold value $+\alpha_e E$ is the appropriate correction factor for pattern 110 (i.e., $D_{N-2}=1$, $D_{N-1}=1$, and $D_N=0$), $-\alpha_e E$ is the appropriate correction factor for pattern 001, and αEO (zero volts in this example) is the appropriate correction factor for patterns 010 and 101.

FIG. **22** illustrates the four partial response signal levels depicted in FIG. **21** relative to nominal voltage level V_T. In the case of a differential signaling system, the partial response to the preceding symbol may be viewed as increasing or decreasing the differential amplitude (i.e., the difference between the signals that form the differential signal pair) relative to a nominal differential amplitude. Normalizing the positive and negative signal levels for the nominal differential amplitude to 1 and −1, respectively, voltage level V_T becomes zero, and the four possible signal levels become 1+α, 1−α, −1+α and −1−α, where a represents the magnitude of the partial response to the preceding symbol. Thus, when the preceding symbol, D_{N-1}, is a '0', the incoming symbol, D_N, is represented by a signal level at either 1−α or −1−α, depending on whether D_N is a '1' or '0'. Similarly, when $D_{N-1}=1$, the incoming symbol is represented by a signal level at either 1+α or −1+α according to the state of the current symbol D_N. In the former case (i.e., when $D_{N-1}=0$), the two complementary

signal levels, $-1-\alpha$ and $1-\alpha$, have a common mode of level $-\alpha$, as shown in box **2200**. In the latter case (i.e., when $D_{N-1}=1$), the two complementary signal levels, $1+\alpha$ and $-1+\alpha$, have a common mode of $+\alpha$, as shown in box **2205**.

In the preceding examples, each partial response receiver includes a pair of data samplers, one referenced to reference level $+\alpha$ and the other to reference level $-\alpha$. The examples depict multi-tap receivers, so the partial-response tap values are designated $+\alpha$**1** and $-\alpha$**1** to distinguish them from the subsequent tap values α**2** through αN. In some instances, the first tap values employ naming conventions that differ slightly from the simple $\pm\alpha$**1** to distinguish the alpha levels for odd and even edge and data sampler stages. In each case, the first-tap $\pm\alpha$ correction factors can be derived using the methods and circuits detailed in connection with FIGS. **21** through **23**.

FIG. **23** depicts adaptive module **1862** of FIG. **18** in accordance with one embodiment. Adaptive module **1862** derives correction factors for even data samples, but may be easily adapted to similarly derive alpha values for odd data samples and odd and even edge samples, as will be evident to those of skill in the art. In some embodiments, much of the logic employed to derive alpha values for the various samplers is provided by a general-purpose state machine, such as an embedded processor.

A retimer **2305** aligns odd and even data bits with a corresponding level sample Edlev by imposing two bits of delay on odd data signal DataO and one bit of delay on each of signals DataE and Edlev to produce respective signals E_{N-1}, D_{N-1}, and D_{N-2}. The remaining circuitry of module **1862** employs these three signals to derive alpha correction factors $\pm\alpha_d E$. As noted above in connection with FIG. **22**, the $+\alpha$ correction factor (e.g., $+\alpha_d E$) is the average of levels $1+\alpha$ and $-1+\alpha$, and the $-\alpha$ correction factor (e.g., $-\alpha_d E$) is the average of levels $1-\alpha$ and $-1-\alpha$. Adaptive module **1862** derives each of the four levels $1+\alpha$ and $-1+\alpha$, $1-\alpha$, and $-1-\alpha$ and from them calculates correction factors $\pm\alpha_d E$.

Each of the four levels $1+\alpha$ and $-1+\alpha$, $1-\alpha$, and $-1-\alpha$ is derived in turn. Beginning with the derivation of level $1+\alpha$, recall from the discussion of FIG. **22** that $1+\alpha$ is the signal level when input signal Vin' experiences two consecutive symbols representative of logic ones (i.e., $D_{N-1}=1$ and $D_{N-2}=1$).

The derivation of the $1+\alpha$ level begins when signal AdEn is asserted, to enable calibration generally, and alpha-select signals αsel**1** and αsel**2** are both asserted to (both set to logic one) to enable calibration of the $1+\alpha$ level. A decoder **2310**, when thus enabled, asserts an enable signal En($1+\alpha$) whenever the last two data bits D_{N-1} and D_{N-2} are resolved to represent logic ones. Assertion of enable signal En($1+\alpha$) enables a counter **2315**, which then either increments or decrements based upon the value of level signal E_{N-1}. Alpha-select signals αsel**1** and αsel**2**, when asserted together, cause a multiplexer **2320** to convey the contents $C_{1+\alpha}$ a of counter **2315** to a digital-to-analog converter (DAC) **2325**, which converts digital signal $C_{1+\alpha}$ into the analog tap value $\alpha_t E$ for the middle feed-forward path of sampler stage **1800** of FIG. **18**. This process repeats until counter **2315** eventually arrives at a value for which tap value $\alpha_t E$ causes the corresponding sampler **1815** to produce, on average, the same number of one and zero values for data signal DT. The resulting tap value $\alpha_t E$ is a measure of the $1+\alpha$ level, for which count $C_{1+\alpha}$ a is a digital representation.

The foregoing process is repeated to derive level $-1+\alpha$. AdEn is once again asserted, or is left asserted, to enable calibration generally, and alpha-select signals αsel**1** and αsel**2** are set to zero and one, respectively, to enable calibration of the $-1+\alpha$ level. Decoder **2310** then asserts an enable signal En($-1+\alpha$) whenever the last two data bits D_{N-1} and D_{N-2} are resolved to respectively represent logic zero and logic one. Assertion of enable signal En($-1+\alpha$) enables a counter **2330**, which then either increments or decrements based upon the value of level signal E_{N-1}. Alpha-select signals αsel**1** and αsel**2**, when respectively zero and one, cause multiplexer **2320** to convey the contents $C_{-1+\alpha}$ of counter **2330** to DAC **2325**, which converts digital signal C_{-1+} a into the analog tap value $\alpha_t E$ to the middle feed-forward path of sampler stage **1800** of FIG. **18**. Counter **2330** thus eventually arrives at a value for which tap value $\alpha_t E$ causes the corresponding sampler **1815** to produce, on average, the same number of one and zero values for data signal DT. This value of tap coefficient $\alpha_t E$ is a measure of the $-1+\alpha$ level, for which count $C_{-1+\alpha}$ is a digital representation.

As illustrated using block **2205** in FIG. **22**, tap value $+\alpha_d E$ is the average of levels $1+\alpha$ and $-1+\alpha$. An averaging circuit **2335** sums values $C_{1+\alpha}$ and $C_{-1+\alpha}$ and divides the result by two to obtain a count $C_{+\alpha}$ representative of tap value $+\alpha_d E$. A second DAC **2340** converts count $C_{+\alpha}$ into tap value $+\alpha_d E$. Count $C_{+\alpha}$ may be captured in a register in some embodiments to prevent updates of counters **2315** and **2330** from affecting tap value $+\alpha_d E$ until e.g. signal AdEn is deasserted.

The foregoing process is repeated for the remaining data patterns 1-0 and 0-0 to fill two more counters **2345** and **2350** with respective counts $C_{1-\alpha}$ and $C_{-1-\alpha}$ representative of appropriate levels for $1-\alpha$ and $-1-\alpha$. Averaging circuit **2335** sums counts $C_{1-\alpha}$ and $C_{-1-\alpha}$ and divides the result by two to obtain an average count $C_{-\alpha}$ representative of tap value $-\alpha_d E$. A third DAC **2355** converts count $C_{-\alpha}$, to tap coefficient $-\alpha_d E$. Count $C_{-\alpha}$ may be captured in a register in some embodiments to prevent updates of counters **2345** and **2350** from affecting tap value $-\alpha_d E$ until e.g. signal AdEn is deasserted.

While detailed in connection with specific PrDFE architectures, other architectures are readily adapted for use in the communication systems described herein. Suitable PrDFE circuits are detailed, for example, in U.S. patent application Ser. No. 10/662,872 entitled "Partial Response Receiver," by Vladimir M. Stojanovic, Mark A. Horowitz, Jared L. Zerbe, Anthony Bessios, Andrew C. C. Ho, Jason Wei, Grace Tsang, and Bruno W. Garlepp; and U.S. patent application Ser. No. 10/875,086 entitled "Offset Cancellation in a Multi-Level Signaling System," by Vladimir M. Stojanovic, Andrew Ho, Fred F. Chen, and Bruno W. Garlepp. Test methodologies that can be used, for example, in connection with the above-detailed circuits are detailed in U.S. patent application Ser. No. 10/815,604 entitled "Margin Test Methods and Circuits," by Andrew Ho, Vladimir M. Stojanovic, and Bruno W. Garlepp.

FIG. **24** depicts an embodiment of an even data sampler stage **2400** in accordance with another DDR embodiment. Stage **2400** is similar to stage **1800** of FIG. **18**, and can be used in place of the odd and even sampler stages of FIG. **18**. For brevity, only the even data sampler is detailed here. Configuring sampler stage **2400** for use in extracting odd-data and edge samples is well within the ability of those of skill in the art.

Sampler stage **2400** includes three feed-forward paths that can be used in the manner discussed above in connection with FIG. **18**. The two lower-most paths apply tap coefficients $+\alpha$d and $-\alpha$d. A third feed-forward path includes an additional twist amplifier **2402**, an additional adaptive sampler **2405**, and a phase shifter **2410**. A multiplexer **2415** selects the appropriate sampler output based upon the logic level resolved for the most-recently received bit, or possibly some

other prior bit or bits. The third input terminal to multiplexer **2415** and the two select terminals DCkE.d**1***o* and AdpSel**0**,**1** together allow stage **2400** to replace one of the lower-most feed-forward paths with amplifier **2402** and sampler **2405**. A multiplexer **2420**, controlled by a select signal AdptSel**0**, **1**, selects the output of any of the amplifier/sampler pairs for selection by previous resolved bit d**1***o*. A third multiplexer **2425** responds to a select signal FrcAlph**2** by applying either fixed (0 or 1) or dynamic feedback.

Sampler stage **2400** can be used to characterize the incoming data Vin'. For example, multiplexer **2415** can connect the output of sampler **2405** to output terminal Ae, allowing for downstream comparisons of signals d**0***e* and Ae. Using output signal d**0***e* as a reference for comparison, phase shifter **2410** and amplifier **2402** can each be adjusted to explore the respective timing and voltage margins of the incoming signal. Mux **2425** can change the feedback provided to sampler **2405**. In another test feature, mux **2415** can substitute one of the lower two amplifier/receiver pairs with amplifier **2402** and sampler **2405**. Mux **2420** can then select the output of the omitted amplifier/sampler pair. The output of the omitted pair can then be monitored via terminal Ae, and the threshold and/or timing of the omitted pair to be adjusted (e.g., to obtain a preferred BER).

While detailed in connection with specific PrDFE architectures, other architectures are readily adapted for use in the communication systems described herein. Suitable PrDFE circuits are detailed, for example, in U.S. patent application Ser. No. 10/662,872 entitled "Partial Response Receiver," by Vladimir M. Stojanovic, Mark A. Horowitz, Jared L. Zerbe, Anthony Bessios, Andrew C. C. Ho, Jason Wei, Grace Tsang, and Bruno W. Garlepp; and U.S. patent application Ser. No. 10/875,086 entitled "Offset Cancellation in a Multi-Level Signaling System," by Vladimir M. Stojanovic, Andrew Ho, Fred F. Chen, and Bruno W. Garlepp. Test methodologies that can be used, for example, in connection with the above-detailed circuits are detailed in U.S. patent application Ser. No. 10/815,604 entitled "Margin Test Methods and Circuits," by Andrew Ho, Vladimir M. Stojanovic, and Bruno W. Garlepp.

FIG. **25** depicts an embodiment of an FIR filter **2500** suitable for use in a number of the foregoing embodiments. With respect to FIG. **9**, for example, filter **2500** can be an embodiment of FIR **935** to provide the last eight taps of the receiver weighted by tap coefficients α**3**-α**10**. The input signal Vin is offset by the summing output currents from eight multiplying DACs **2502**, each of which multiplies a one-bit value from a respective one of multiplexers **2510** by a respective tap weight, or α correction factor. Each tap weight has 4 bits of adjustment and one bit for sign, resulting in a total of five bits of control per tap weight, RxTap[**10**:**3**]<**4**:**0**>, where RxTap[#]<**4**:**0**>=α#.

An equalizer clock signal EqCk, which may be differential, is phase controlled using e.g. an adjustable delay line **2505**. Delay line **2505** is adjusted using a clock-and-data recovery circuit (CDR) normally used to adjust the sample instants for the incoming data to the center of the data eyes. In a DFE calibration mode, an alternative data source may drive the filter **2500** and the associated DFE. The equalizer clock EqCk employed by the receive DFE is then allowed to move with respect to the receive clock at the direction of the CDR. This process adjusts the timing of the data traversing the receive DFE so that the feedback provided by the DFE output is aligned with the incoming test data at Veq. Once the calibration is finished, the delay offset is fixed (saved) for use in the normal operating mode, during which time the CDR adjusts the recovered clock RecClk, and consequently the offset of the equalizer clock signal, to maintain its alignment with the incoming data.

ADL **2505** need not be included as part of filter **2500**, but can be implemented as part of the associated CDR. Moreover, the function of ADL **2505** can be implemented using e.g. a phase interpolator to adjust the phase of clock signal EqCk with respect to the edge clock signals eCkE and eCkO. The clock signals here and elsewhere can be single-ended or differential. A common-mode voltage for signal Veq can be established using a voltage generator **2506** that receives a common-mode reference voltage Vcomref. Voltage generator **2506** prevents changes in the correction factors from impacting the common-mode voltage at output port Veq.

The clock signal from delay line **2505** times the application of feedback from respective odd and even data pipes **2515** and **2520** to DACs **2502** such that the resulting feedback pulses are aligned to the incoming data symbols from the preceding linear equalizer. A pair of AND gates gate the odd and even clock signals eCkO and eCkE so that filter **2500** can be disabled in a low-power mode (when signal LP is asserted). Though signal LP may be the same signal asserted to drive the associated DFE into a low-power mode, or the FIR filter and DFE may be controlled separately to provide more power settings. Still greater flexibility can be achieved by selective control of each or a subset of the taps.

FIG. **26** depicts an adaptive communication system **2600** in accordance with one embodiment. System **2600** includes a transmitter **2605** that transmits a differential data signal TN/TP to the input port of a receiver **2610** via a differential channel **2615**. Transmitter **2605** includes a multi-tap transmitter **2620** with pre-emphasis, which is in one embodiment similar to transmitter **300** of FIG. **3**. Receiver **2610** includes a linear equalizer **2630** and a DFE **2633**, which in turn includes e.g. a PrDFE **2635** and an FIR **2640**. Detailed discussions of suitable transmitter and receiver components are presented above, so detailed treatments of transmitter **2605**, receive equalizer **2630**, and DFE **2633** are omitted here for brevity.

In addition to components of the type discussed above, IC **2610** includes an error-measurement circuit **2650** that compares input data Din with some reference to determine the bit error rate (BER). A finite state machine (FSM) **2655** receives a measure of the BER from measurement circuit **2650** and adjusts one or more of receive equalizer **2630**, PrDFE **2635**, and FIR **2640**. FSM **2655** can also convey instructions to a corresponding transmitter FSM **2660**, e.g. via a backchannel **2665**, to adaptively change the setting of transmitter **2620**. BER measurement circuit **2650** samples the output of receive equalizer **2630** and compares the result with the value sampled by PrDEF **2635**.

Suitable measurement circuits are detailed U.S. patent application Ser. No. 09/976,170 filed Oct. 12, 2001, and entitled "Method and Apparatus for Evaluating and Optimizing a Signaling System," by Zerbe et al., which issued Nov. 14, 2006, as U.S. Pat. No. 7,137,048 and is incorporated herein by reference. BER is only one measure of signal quality: one or more other measures, such as voltage and timing margin, can be used instead of or in addition to BER. Some of these circuits use methods that are non-destructive to the main data signal path, e.g. margins can be measured while normal data is being transmitted. Backchannel **2665** can be implemented in a number of ways. In some embodiments, for example, backchannel **2665** communicates with IC **2605** via channel **2615**, a configuration that reduces the requisite number of device pins and interconnections. Some such examples are detailed in U.S. patent application Ser. No. 10/739,823 entitled "Noise-Tolerant Signaling Schemes Supporting Sim-

plified Timing And Data Recovery," by Andrew Ho, Vladimir Stojanovic, Fred F. Chen, Elad Alon, and Mark A. Horowitz, which issued Nov. 6, 2007, as U.S. Pat. No. 7,292,637 and is incorporated herein by reference.

In some embodiments, the receive FSM **2655** additionally controls power settings for one or more of transmitter **2620**, equalizer **2630**, PrDFE **2635**, and FIR **2640**. Furthermore, FSM **2655** might receive feedback relating the quality of a number of additional links, and may be configured to optimize the power and performance settings for a number of links to achieve an overall level of system performance. FIG. **29** shows a table that is illustrative of some of the possible equalizer settings and their possible relative power requirements.

Further referring to FIG. **29**, in row **1**, at **2902**, representative of the lowest performance setting, the transmitter is in the low-performance mode and both the PrDFE and FIR of the corresponding receiver are disabled. In row **4**, at **2904**, representative of the highest performance setting, the transmitter is in the high-performance mode and both the PrDFE and FIR are enabled. The table of FIG. **29** is illustrative: other combinations of devices can be activated, and each of the adaptable elements in FIG. **26** can be configured over a range of settings. For example, the transmitter may change the weights associated with some taps or the FIRs of the transmitter or receiver can be modified to support modes in which individual or collections of taps can be disabled if not needed to consume minimum power while satisfying the performance or margin objective. Similarly the Rx Equalizer output swing and gain may be scaled back to the point where minimum performance margins are met, thus also reducing its power. Alternately some TX or DFE taps could be completely powered down if they are not needed and, if their clock is isolated, power can be saved from that section of the clock tree. Through a combination of enabling or disabling Tx and Rx DFE taps and adjustment of the tap positions the overall system power can be minimized while maintaining adequate margins. Further, the entire transmitter output swing, and thus the power consumed, can be adjusted and balanced against the equalization settings to minimize system power and crosstalk to adjacent links while maintaining margin to the required system bit error rate. Other combinations of settings may also be supported.

FIG. **27** is a flowchart **2700** depicting a method of finding a power setting for system **2600** of FIG. **26** that minimizes operating power in achieving a desired level of performance. Beginning with step **2705**, the link setting is set to establish the lowest operating power (e.g., setting #**1** in FIG. **29** at **2902**). Next, the settings for the transmitter, linear receive equalizer, and DFE (e.g., **2620**, **2630**, and **2633** of FIG. **26**) are optimized (step **2710**) using e.g. a process described above. Step **2710** produces measurements of the best bit-error rate BERbest and best voltage margin Vmbest for the current link setting (data **2712**). If the best bit-error rate BERbest is less than or equal to the required bit-error rate BERrq and the best voltage margin Vmbest is greater than or equal to the minimum voltage margin Vmmin (decisions **2715** and **2717**), then the current link setting is saved and the process of FIG. **27** is finished. If either of decisions **2715** and **2717** yield a "no," indicating unacceptably low link performance, then the process moves to step **2720** and the next higher link setting is tried. The process of FIG. **27** can be applied to one or a collection of links, and may be repeated periodically for active links to adapt for changes in e.g. temperature, supply-voltage, and the system noise environment.

FIG. **28** is a flowchart **2800** depicting a method of optimizing linear receive equalizer settings in step **2710**, of FIG. **27**, in accordance with one embodiment. First, at step **2805**, variables used in optimizing the power settings are set to initial values. Signal LEQ, the setting of the linear equalizer, is initialized to e.g. zero. Three registers (not shown) are initialized to store the best LEQ setting LEQbest, an initial bit-error rate BERmin, and a best voltage margin Vmbest. The remainder of flowchart **2800** replaces these initial values with measured values of the best linear-equalizer setting, the lowest BER, and the highest voltage margin for the selected link setting.

In the next step, **2810**, the settings of the transmitter, PrDFE, and/or the receive FIR are adaptively optimized for the selected link settings. Methods and circuits for performing these optimizations are detailed in e.g. the above-incorporated U.S. patent application Ser. No. 10/662,872 entitled "Partial Response Receiver," by Vladimir M. Stojanovic, Mark A. Horowitz, Jared L. Zerbe, Anthony Bessios, Andrew C. Ho, Jason Wei, Grace Tsang, and Bruno W. Garlepp.

Next, the BER and voltage margin are measured for the link under consideration (decision **2815**). If the BER is less than the recorded minimum BERmin and the voltage margin Vm is greater than the recorded best voltage margin Vmbest, then BERmin, Vmbest, and LEQbest are updated with the current BER, voltage margin Vm, and LEQ setting (step **2820**). Irrespective of whether the values of step **2820** are updated, the process moves to decision **2825**. If all the LEQ settings have been tried, the linear equalizer setting LEQ is set to LEQbest (step **2835**) and the system settings are once again optimized in the manner of step **2810** (step **2840**); otherwise, the LEQ setting is incremented (step **2830**) the process returns to step **2810**. The process of flowchart **2800** thus provides, as outputs, the best LEQ setting for a given power setting and the associated BER (BERbest) and voltage margin (Vmbest) by use of an exhaustive search of the settings of the linear equalizer. Those skilled in the art can easily see an extension of the search techniques used to include those of a binary search or other techniques faster than exhaustive search.

In the foregoing description and in the accompanying drawings, specific terminology and drawing symbols are set forth to provide a thorough understanding of the present invention. In some instances, the terminology and symbols may imply specific details that are not required to practice the invention. For example, the interconnection between circuit elements or circuit blocks may be shown or described as multi-conductor or single conductor signal lines. Each of the multi-conductor signal lines may alternatively be single-conductor signal lines, and each of the single-conductor signal lines may alternatively be multi-conductor signal lines. Signals and signaling paths shown or described as being single-ended may also be differential, and vice-versa. Similarly, signals described or depicted as having active-high or active-low logic levels may have opposite logic levels in alternative embodiments. As another example, circuits described or depicted as including metal oxide semiconductor (MOS) transistors may alternatively be implemented using bipolar technology or any other technology in which a signal-controlled current flow may be achieved. With respect to terminology, a signal is said to be "asserted" when the signal is driven to a low or high logic state (or charged to a high logic state or discharged to a low logic state) to indicate a particular condition. Conversely, a signal is said to be "de-asserted" to indicate that the signal is driven (or charged or discharged) to a state other than the asserted state (including a high or low logic state, or the floating state that may occur when the signal driving circuit is transitioned to a high impedance condition, such as an open drain or open collector condition). A signal

driving circuit is said to "output" a signal to a signal receiving circuit when the signal driving circuit asserts (or de-asserts, if explicitly stated or indicated by context) the signal on a signal line coupled between the signal driving and signal receiving circuits. A signal line is said to be "activated" when a signal is asserted on the signal line, and "deactivated" when the signal is deasserted. Whether a given signal is an active low or an active high will be evident to those of skill in the art.

An output of a process for designing an integrated circuit, or a portion of an integrated circuit, comprising one or more of the circuits described herein may be a computer-readable medium such as, for example, a magnetic tape or an optical or magnetic disk. The computer-readable medium may be encoded with data structures or other information describing circuitry that may be physically instantiated as an integrated circuit or portion of an integrated circuit. Although various formats may be used for such encoding, these data structures are commonly written in Caltech Intermediate Format (CIF), Calma GDS II Stream Format (GDSII), or Electronic Design Interchange Format (EDIF). Those of skill in the art of integrated circuit design can develop such data structures from schematic diagrams of the type detailed above and the corresponding descriptions and encode the data structures on computer readable medium. Those of skill in the art of integrated circuit fabrication can use such encoded data to fabricate integrated circuits comprising one or more of the circuits described herein.

While the present invention has been described in connection with specific embodiments, variations of these embodiments will be obvious to those of ordinary skill in the art. For example, the signal detectors described herein quickly identify data peaks by experimenting with a range of phase offsets. The correct phase offset, once known, can be shared with a CDR to aid in synchronizing a reference clock with the incoming data. Furthermore, the receivers described above employ voltage-mode signaling, but might also be adapted to employ current-mode schemes in which signals are conveyed as modulated currents. Voltage thresholds may also be employed in the latter case by simply converting current signals to voltage for comparison with a voltage reference. In addition, embodiments of the invention may be adapted for use with multi-pulse-amplitude-modulated (multi-PAM) signals, the number of stages of PrDFEs or of FIR filters can be adjusted in embodiments that employ them, and the invention is not limited to DDR, but could be employed in e.g. single-data-rate (SDR) or quad-data-rate (QDR) systems. Moreover, some components are shown directly connected to one another while others are shown connected via intermediate components. In each instance the method of interconnection, or "coupling," establishes some desired electrical communication between two or more circuit nodes, or terminals. Such coupling may often be accomplished using a number of circuit configurations, as will be understood by those of skill in the art. Therefore, the spirit and scope of the appended claims should not be limited to the foregoing description. Only those claims specifically reciting "means for" or "step for" should be construed in the manner required under the sixth paragraph of 35 U.S.C. Section 112.

What is claimed is:

1. A system comprising:

a transmitter having transmit pre-emphasis circuitry with a plurality of transmit filter taps;

a receiver to receive a signal from the transmitter via a channel, the channel having a channel length, the receiver having a decision-feedback equalizer having at least one filter tap, the receiver further comprising a linear equalizer coupled between the channel and the decision-feedback equalizer and having at least one linear equalizer tap, the plurality of transmit filter taps further including an adjustable filter tap of an adjustable symbol latency, the adjustable filter tap having a pre-cursor latency in a first equalization mode and a post-cursor latency in a second equalization mode, the system further comprising tap control logic coupled to the at least one linear equalizer tap and the adjustable filter tap of the transmit pre-emphasis circuitry; and

where the system supports a training mode for link training operations and at least the first and second equalization modes for data transfer operations, including the first equalization mode where the transmit pre-emphasis circuitry and the decision-feedback equalizer are activated, and the second equalization mode where the transmit pre-emphasis circuitry is activated and the decision-feedback equalizer is deactivated, and where a selection between the first equalization mode and the second equalization mode is based on the channel length.

2. The system of claim **1**, wherein the linear equalizer is disabled in the second equalization mode and enabled in the first equalization mode.

3. The system of claim **1**, wherein the tap control logic is further coupled to the linear equalizer to selectively disable the linear equalizer.

4. The system of claim **1**, wherein the transmit pre-emphasis circuitry further includes logic to set the adjustable filter tap to a first symbol latency relative to a main filter tap in the first equalization mode and to set the adjustable filter tap to a second symbol latency relative to the main filter tap in the second equalization mode.

5. The system of claim **1**, the transmit pre-emphasis circuitry including a driver having a plurality of driver input terminals, the plurality of transmit filter taps coupled to respective ones of the driver input terminals and supporting first and second tap configurations, and mode circuitry to select the first tap configuration in the second equalization mode and the second tap configuration in the first equalization mode.

6. A system comprising:

first and second transmitters, each transmitter having a plurality of transmit taps, including a pre-cursor transmit tap, a cursor transmit tap, and a post-cursor transmit tap, coupled to respective driver input terminals;

first and second channels coupled to the respective first and second transmitters;

first and second receivers coupled to the first and second transmitters via the respective first and second channels, the first and second receivers each having a plurality of receive taps, including a post-cursor receive tap; and

tap-control logic coupled to the receive taps, the tap-control logic disabling at least one of the receive taps in the first receiver and enabling at least one of the receive taps in the second receiver;

wherein the tap-control logic is coupled to the transmit taps;

wherein the tap-control logic supports multiple power modes, including a low-power mode in which a first number of the receive taps is enabled and a high-power mode in which a second number, greater than the first number, of the receive taps is enabled; and

wherein the first channel is in the low-power mode and the second channel is in the high-power mode.

7. The system of claim **6**, wherein each of the first and second receivers includes a linear equalizer preceding the receive taps.

8. The system of claim 6, wherein each of the receivers includes an amplitude detector.

9. A signaling system supporting a plurality of modes, including a first mode and a second mode, the signaling system comprising:

a. a communication channel;

b. a transmitter that includes:

a plurality of pre-emphasis taps, including a first transmit tap and a second transmit tap of an adjustable latency relative to the first transmit tap, and

logic to alter the latency of the second transmit tap relative to the first transmit tap to select between the first mode and the second mode; and

c. a receiver having a receive equalizer coupled to the transmitter via the communication channel, wherein the receive equalizer includes at least one post-cursor receive tap having a post-cursor latency in the first mode and disabled in the second mode, and wherein the second transmit tap has the post-cursor latency in the second mode.

10. The signaling system of claim 9, wherein the receiver includes a liner equalizer with adjustable gain disposed between the receive equalizer and the channel.

11. A signaling system supporting a plurality of power and performance modes, including a high-performance mode and a low-performance mode, the signaling system comprising:

a. a communication channel;

b. a first transmitter that includes:

i. a transmit pre-emphasizer having a plurality of input terminals and an output port coupled to the communication channel;

ii. a plurality of pre-emphasis taps coupled to respective ones of the plurality of input terminals, the pre-emphasis taps including a pre-cursor tap and a transmit post-cursor tap; and

iii. a first mode-select port;

c. a receiver coupled to the output port of the transmitter via the communication channel, the receiver including a decision-feedback equalizer having at least one filter tap, and a linear equalizer coupled between the communication channel and the decision-feedback equalizer and having at least one linear equalizer tap, the receiver further including a second mode-select port; and

d. a controller coupled to the first and second mode-select ports;

e. wherein the controller disables the transmit post-cursor tap and enables the receive post-cursor tap in the high-performance mode.

12. The signaling system of claim 11, further comprising:

a. a second communication channel;

b. a second transmitter that includes:

i. a second transmit pre-emphasizer having a plurality of input terminals and an output port coupled to the communication channel;

ii. a second plurality of pre-emphasis taps coupled to respective ones of the plurality of input terminals, the second plurality of pre-emphasis taps including a first transmit tap and a second transmit tap of an adjustable latency relative to the first transmit tap; and

iii. a second mode-select port to receive a second mode-select signal, the second mode-select signal to alter the latency of the second transmit tap relative to the first transmit tap.

13. The signaling system of claim 12, wherein the controller is to control the second transmit tap in at least one of the first and second transmitters to alternatively precede or follow the first transmit tap in the respective one of the first and second transmitters.

14. The signaling system of claim 13, wherein the controller independently selects between the high-performance mode and the low-performance modes for each of the first and second transmitters.

15. The signaling system of claim 14, further comprising at least one performance monitor coupled to an output of the receiver, the performance monitor to convey to the controller an error rate for the communication channel.

16. The signaling system of claim 15, wherein the controller selects between the high-performance mode or the low-performance mode for the communication channel based, at least in part, upon the error rate.

17. The signaling system of claim 16, wherein the controller selects, for the communication channel, the high-performance mode if the error rate is above an error threshold.

18. The signaling system of claim 17, wherein the controller selects, for the second communication channel, the high-performance mode if a second error rate is above the error threshold.

19. A system comprising:

a. a transmitter having transmit pre-emphasis circuitry with a plurality of transmit filter taps;

b. a channel coupled to the transmit pre-emphasis circuitry; and

c. a receiver coupled to the transmit pre-emphasis circuitry via the channel, the receiver having a decision-feedback equalizer having one or more filter taps, the receiver further comprising a linear equalizer coupled between the channel and the decision-feedback equalizer and having at least one linear-equalizer tap, the plurality of transmit filter taps further including an adjustable filter tap of an adjustable symbol latency, the adjustable filter tap having a pre-cursor latency in a first equalization mode and a post-cursor latency in a second equalization mode, the system further comprising tap control logic coupled to the at least one tap of the linear equalizer and the adjustable filter tap of the transmit pre-emphasis circuitry;

where the system supports at least the first and second equalization modes, where the first equalization mode comprises a high-performance mode where the decision-feedback equalizer is operated, and where the second equalization mode comprises a low-power mode where the transmit pre-emphasis circuitry is activated and the decision-feedback equalizer is deactivated; and

wherein the transmit pre-emphasis circuitry is activated in each of the high-performance mode and the low-power mode.

20. The system of claim 19, where the receiver includes the decision-feedback equalizer with plural taps, at least one of the plural taps activated and de-activated in the high-performance mode and low-power mode respectively.

21. The system of claim 20, where at least one of the plural taps is activated in each of the high-performance mode and the low-power mode.

* * * * *